PRODUCT NUMBER

XXXXX–XYYHPLF

- LEAD FREE OPTION SEE NOTE 1,13
- SPECIAL OPTIONS SEE NOTE 1 OR 10
- HIGH TEMPERATURE PLASTIC SEE NOTE 1
- NO OF POSITIONS SEE NOTE 1
- PIN PLATING SEE SHEET 2
- BASE PART NO.

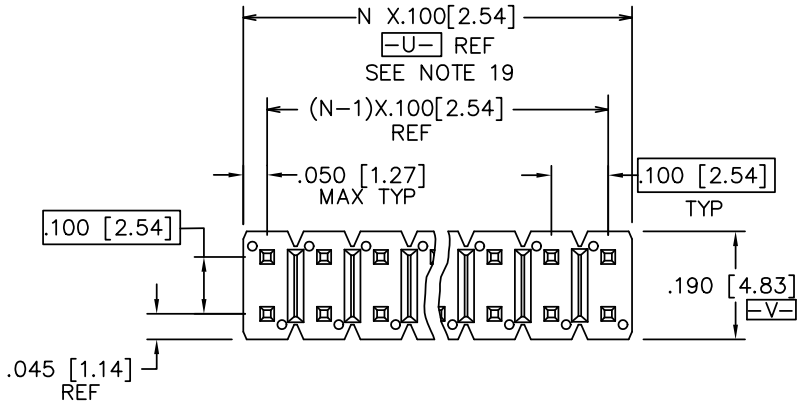

TOP VIEW

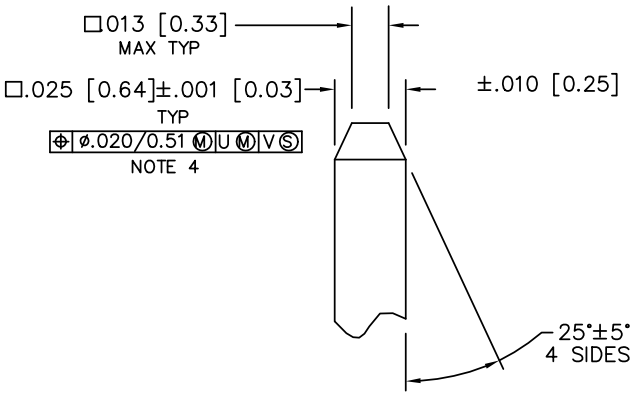

DETAIL P
SCALE 5:1
TYP BOTH ENDS

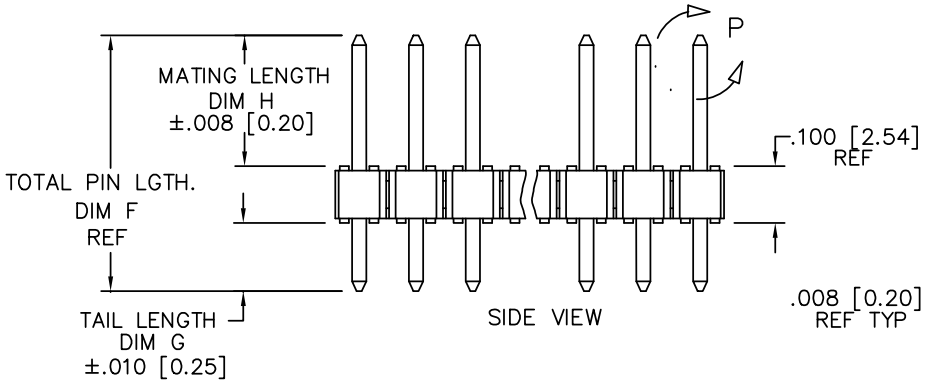

SIDE VIEW

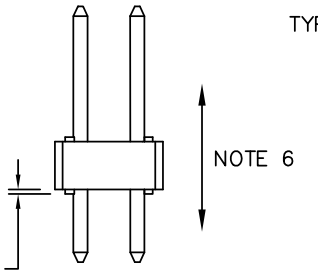

END VIEW

67996–X XX–XXX XXX LF

- TAIL LENGTH (EXAMPLE BELOW) 3.0mm=030 12.8mm=128 (SEE NOTE 16 & 17)
- MATTING LENGTH (EXAMPLE BELOW) 5.0mm=050 25.5mm=255 (SEE NOTE 16 & 17)
- TOTAL NUMBER OF POSITIONS FROM 2 (2X1) THRU 72 (2X36) POS.
- PIN PLATING (SEE NOTE 14) 1=0.76µm Au 4= PURE TIN 8=0.36µm Au
- BASE PART NO. DOUBLE ROW

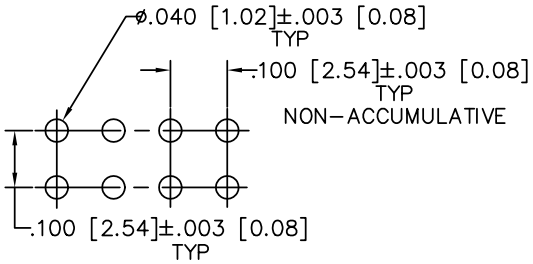

RECOMMENDED HOLE PATTERN

mat'l. code NOTE 2 & 3				surface ISO 1302 √		tolerance ISO 406 ISO 1101	projection	product family BERGSTIK
ltr	ecn no	dr	date	tolerances unless otherwise specified				title
DF	N11–0180	J.Z	2011–05–31	angles	linear	.XX±.01/.X±.3	INCH/MM	BERGSTIK II HEADER D/R .100/2.54cc STRAIGHT
DG	ELX–N–13471	J.Z	2011–11–16			.XXX±0.005/.XX±.13		
				0°±2°		.XXXX±0020/.XXX±.051	scale 2:1	
				dr	T.BREWBAKER	12/21/94	FCI	dwg no 67996 sheet 1 of 8 size A3
				engr	T.HANNA	12/21/94		
				chr	J.MURPHY	12/21/94		
				appd	T.HANNA	12/21/94		type Product Customer Drawing
sheet index	revision	DG	...	DG				
	sheet	1	...	8				

FCIconnect.com
Copyright FCI

PIN PLATING CODES:	
XXXXX-1YY	30u"/0.76u MIN (SEE NOTE 14) OVER 50u"/1.27u MIN Ni
XXXXX-2YY	15u"/0.38u MIN (SEE NOTE 14) OVER 50u"/1.27u MIN Ni
XXXXX-3YY	50u"/1.27u MIN (SEE NOTE 14) OVER 50u"/1.27u MIN Ni
XXXXX-4YY	100u"/2.54u MIN Sn OVER 50u"/1.27u MIN Ni (SEE NOTE 15)
XXXXX-4YYHLF	
XXXXX-5YY	15u"/0.38u MIN (SEE NOTE 14) OVER 50u"/1.27u MIN Ni
XXXXX-6YY	30u"/0.76u MIN (SEE NOTE 14) OVER 50u"/1.27u MIN Ni
XXXXX-7YY	30u"/0.76u MIN (SEE NOTE 14) OVER 50u"/1.27u MIN Ni
XXXXX-8YY	15u"/0.38u MIN (SEE NOTE 14) OVER 50u"/1.27u MIN Ni
XXXXX-9YY	15u"/0.38u MIN (SEE NOTE 14) OVER 50u"/1.27u MIN Ni
XXXXX-0YY	30u"/0.76u MIN (SEE NOTE 14) OVER 50u"/1.27u MIN Ni

NOTES

1. PART NUMBER OPTIONS:
   PIN PLATING CODES (SEE ABOVE)

HIGH TEMPERATURE MATERIAL:

PART NUMBERS WITH AND WITHOUT "H" WILL BE SUPPLIED WITH HIGH TEMPERATURE PLASTIC.

NUMBER OF POSITIONS :

EVEN NUMBER OF POSITIONS FROM 2 (2X1) THROUGH 72 (2X36).
-X00H INDICATES BERGSTRIP PRODUCT. SEE PAGE 3
FOR SPECIAL GEOMETRY OF THIS CONTINUOUS STRIP PRODUCT.
AUTOMATED REELS WILL CONTAIN 45,000 PINS.
SEE SPECIFIC PART NUMBERS FOR AVAILABILITY.

PACKAGING:

PACKAGED IN POLY BAGS.
EIGHT DIGIT PART NUMBERS FOLLOWED BY A "T" ARE PACKAGED IN TUBES. SEE SPECIFIC PART NUMBERS FOR AVAILABILITY.
EIGHT DIGIT PART NUMBERS FOLLOWED BY A "G" ARE PACKAGED IN GPAX FOR IBM ONLY. SEE SPECIFIC PART NUMBERS FOR AVAILABILITY.
PART NUMBERS FOLLOWED BY A "C" ARE PACKAGED IN TUBES WITH A PICKUP CAP APPLIED.
EIGHT DIGIT PART NUMBERS FOLLOWED BY A "A" ARE PACKAGED IN TAPE/REEL WITH PICKUP CAP P/N 95730-003 APPLIED, PER BUS-14-345. DG

LEAD FREE:

ADD "HLF" SUFFIX AT THE END OF PART NUMBER FOR LEAD FREE OPTION, NOT AVAILABLE FOR -5YY,-5YYH, -6YY & -6YYH

2. BODY MATERIAL:
   BODY MATERIAL : MANUFACTURER'S OPTION OF NYLON, PCT GLASS FIBER REINFORCED OR MINERAL FILLED LCP FLAME RETARDENT PER UL-94V-0.
   COLOR: BLACK
   BERGSTRIP™ PRODUCED WITH HIGH TEMPERATURE LCP THERMOPLASTIC, FLAME RETARDENT PER UL-94V-0.
   COLOR: BLACK
   PART NUMBERS WITH "H" AND WITHOUT SUFFIX WILL WITHSTAND EXPOSURE TO 260° C PEAK TEMPERATURE FOR 20 SECONDS IN WAVE SOLDER, INFRA-RED OR VAPOR PHASE SOLDER PROCESS.

3. PIN MATERIAL: PHOS BRONZE.
4. MEASURED WITH PART IN RESTRAINED CONDITION.
5. TWO SIDES OF PIN TIPS NOT PLATED. TYPICAL BOTH ENDS.
6. 2LBS/0.9KG MIN PIN RETENTION IN EITHER DIRECTION.
7. MILITARY BERGSTIK HEADER
   P/N XXXXX-XYY-MIL
   NOT AVAILABLE.
8. ±.010/0.25 TOL APPLIES TO ALL "G" TAILS EXCEPT INDICATED PARTS ON TABLE WHERE +.010/0.25 -.000/0.00 APPLIES.
9. NOTCH CONFIGURATION WILL VARY PER VENDOR'S DISCRETION.
10. BERGSTRIP™ PART NUMBERS FOLLOWED BY BY A "B" ARE BULK PRICED.
11. TAIL LENGTH (DIM. G) TO BE ±.008/.0.20.
12. POSITIONS PER ROW 37 TO 50 CAN BE PRODUCED, BUT FLATNESS AND CURVATURE MAY NOT BE HELD AS CLOSE AS 36 POSITIONS.
13. THESE PRODUCTS MEETS EUROPEAN UNION DIRECTIVES AND OTHER COUNTRY REGULATION AS DESCRIBED IN GS-22-008.
14. PLATING OPTIONS:
    PERFORMANCE PLATING WILL BE EITHER GOLD OR GXT ON POST OR TAIL, OPTIONALLY (78~295u"/2~7.5u) TIN ON TAIL.
15. "THIS PRODUCT HAS 100% TIN PLATING IN THE INTERFACE AND HAS NOT BEEN TESTED FOR WHISKER GROWTH IN ALL INTERCONNECT ENVIRONMENTS."
16. THE OAL DON'T EXCEED 34.5mm
17. INCREMENTS BY 0.1mm IN LENGTHS ONLY
18. FOR SPECIAL PACKAGING REQUEST PLEASE CONTACT PRODUCT MANAGER FOR AVAILABILITY
19. TO DETERMINE DIMENSIONS:
    N=NUMBER OF POSITION PER ROW
    EXAMPLE: 10 POS. N X .100/2.54

mat'l. code				surface	tolerance	projection	product family
NOTE 2 & 3				ISO 1302	ISO 406 ISO 1101		BERGSTIK
ltr	ecn no	dr	date	tolerances unless otherwise specified			title
DG				angles	linear: .XX±.01/.X±.3; .XXX±0.005/.XX±.13; .XXXX±0.0020/.XXX±.051	INCH/MM	BERGSTIK II HEADER D/R .100/2.54cc STRAIGHT
				0°±2°		scale 2:1	
				dr	T.BREWBAKER	12/21/94	dwg no 67996 sheet 2 of 8 size A3
				engr	T.HANNA	12/21/94	
				chr	J.MURPHY	12/21/94	
				appd	T.HANNA	12/21/94	type Product Customer Drawing
sheet index	revision sheet						

form: A3

PDS: Rev :DG STATUS: Released Printed: Nov 16, 2012

FCIconnect.com
Copyright FCI

BERGSTRIP™ HEADER

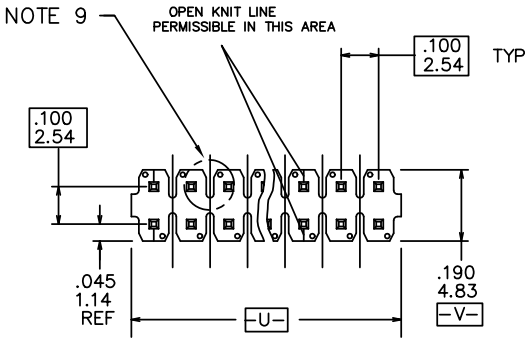

DOUBLE ROW TOP VIEW

REEL PACKING DIMENSIONS

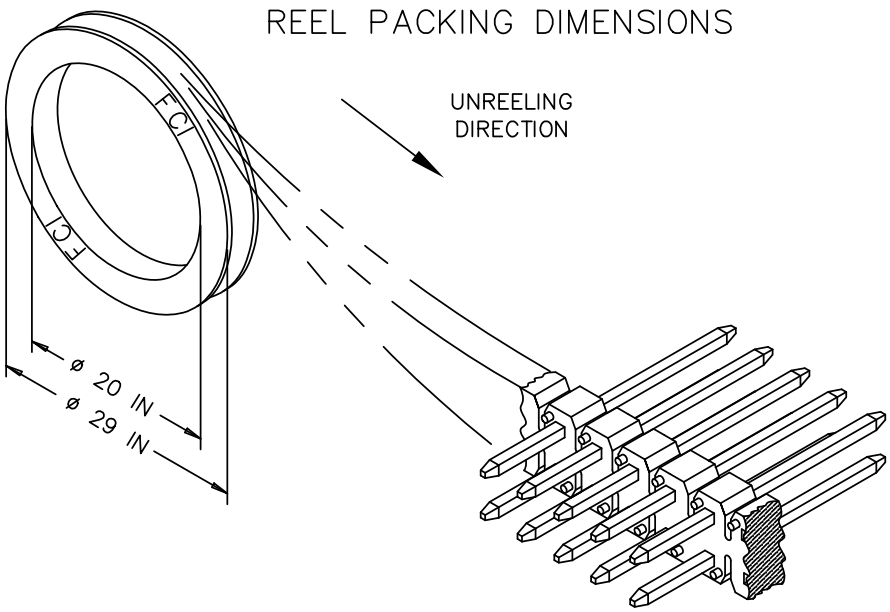

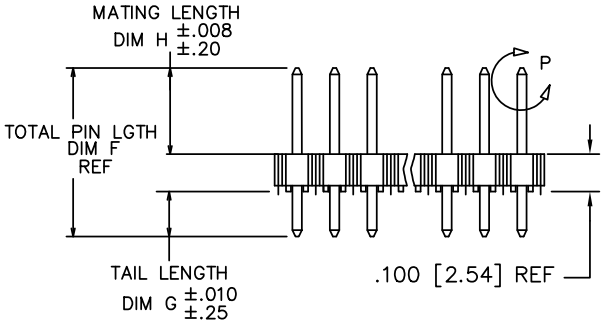

DOUBLE ROW SIDE VIEW

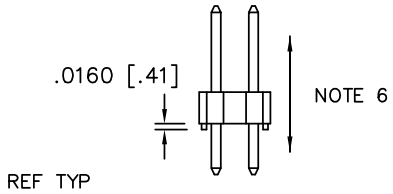

END VIEW DOUBLE ROW

mat'l. code NOTE 2 & 3				surface ISO 1302	tolerance ISO 406 ISO 1101	projection	product family BERGSTIK
ltr	ecn no	dr	date	tolerances unless otherwise specified			title
DG				angles	linear .XX±.01/.X±.3	INCH/MM	BERGSTIK II HEADER D/R .100/2.54cc STRAIGHT
					.XXX±0.005/.XX±.13		
				0°±2°	.XXXX±.0020/.XXX±.051	scale 2:1	
				dr	T.BREWBAKER 12/21/94	FCI	dwg no 67996 sheet 3 of 8 size A3
				engr	T.HANNA 12/21/94		
				chr	J.MURPHY 12/21/94		
				appd	T.HANNA 12/21/94		type Product Customer Drawing
sheet index	revision sheet						

FCIconnect.com
Copyright FCI

PRODUCT NUMBER	TOT. PIN LGTH.		TAIL LENGTH		MATING LENGTH				BERGSTRIP ™	LF
	DIM F	DIM F	DIM G	DIM G	DIM H	DIM H	PACKAGING	NOTES	AVAILABLE	OPTION
	ENGLISH	METRIC	ENGLISH	METRIC	ENGLISH	METRIC				
55005-XYYH	0.597	15.16	0.095	2.41	0.402	10.21	POLY BAGS	–	YES	NOTE 1,13
55030-XYYH	0.630	16.00	0.150	3.81	0.380	9.65	POLY BAGS	–	YES	
67996-XYY	0.425	10.80	0.095	2.41	0.230	5.84	POLY BAGS/TUBES	–	YES	
67997-XYY	0.450	11.43	0.120	3.05	0.230	5.84	POLY BAGS/TUBES	–	YES	
67997-XYYH	0.450	11.43	0.120	3.05	0.230	5.84	POLY BAGS/TUBES	–	YES	
67998-XYY	0.525	13.34	0.107	2.72	0.318	8.08	POLY BAGS/TUBES	–	YES	
67999-XYY	0.548	13.92	0.130	3.30	0.318	8.08	POLY BAGS	–	NO	
68438-XYY	0.555	14.10	0.225	5.72	0.230	5.84	POLY BAGS/TUBES	–	NO	
68439-XYY	0.720	18.29	0.120	3.05	0.500	12.70	POLY BAGS	–	NO	
68464-XYY	0.650	16.51	0.120	3.05	0.430	10.92	POLY BAGS/TUBES	–	NO	
68481-XYY	0.480	12.19	0.095	2.41	0.285	7.24	POLY BAGS/TUBES	–	NO	
68482-XYY	0.938	23.83	0.318	8.08	0.520	13.21	POLY BAGS	–	NO	
68491-XYY	0.475	12.07	0.120	3.05	0.255	6.48	POLY BAGS/TUBES	–	NO	
68600-XYY	0.825	20.96	0.115	2.92	0.610	15.49	POLY BAGS	–	NO	
68601-XYY	0.620	15.75	0.120	3.05	0.400	10.16	POLY BAGS	–	NO	
68602-XYY	0.480	12.19	0.150	3.81	0.230	5.84	POLY BAGS	–	YES	
68690-XYY	0.533	13.54	0.115	2.92	0.318	8.08	POLY BAGS	–	NO	
68691-XYY	0.538	13.67	0.120	3.05	0.318	8.08	POLY BAGS	–	YES	
68692-XYY	0.430	10.92	0.100	2.54	0.230	5.84	POLY BAGS	–	NO	
68693-XYY	0.938	23.83	0.520	13.21	0.318	8.08	POLY BAGS	–	NO	
68716-XYY	0.828	21.03	0.410	10.41	0.318	8.08	POLY BAGS	–	NO	
68734-XYY	0.615	15.62	0.230	5.84	0.285	7.24	POLY BAGS	–	NO	
68737-XYY	0.440	11.18	0.110	2.79	0.230	5.84	POLY BAGS	–	YES	
68738-XYY	0.615	15.62	0.115	2.92	0.400	10.16	POLY BAGS	–	NO	
68739-XYY	0.486	12.34	0.156	3.96	0.230	5.84	POLY BAGS	–	NO	
68743-XYY	0.638	16.21	0.220	5.59	0.318	8.08	POLY BAGS	–	NO	
68749-XYY	0.838	21.29	0.420	10.67	0.318	8.08	POLY BAGS	–	NO	
68779-XYY	0.736	18.69	0.318	8.08	0.318	8.08	POLY BAGS	–	NO	
68783-XYY	0.375	9.53	0.045	1.14	0.230	5.84	POLY BAGS	–	NO	
68799-XYY	0.925	23.50	0.595	15.11	0.230	5.84	POLY BAGS	–	NO	NOTE 1,13

mat'l. code NOTE 2 & 3	surface ISO 1302	tolerance ISO 406 ISO 1101	projection
ltr / ecn no / dr / date	tolerances unless otherwise specified		INCH/MM
DG	angles 0°±2°	linear .XX±.01/.X±.3 / .XXX±0.005/.XX±.13 / .XXXX±.0020/.XXX±.051	scale 2:1
	dr T.BREWBAKER 12/21/94		
	engr T.HANNA 12/21/94		
	chr J.MURPHY 12/21/94		
	appd T.HANNA 12/21/94		
sheet index / revision sheet			

product family: BERGSTIK

title: BERGSTIK II HEADER D/R .100/2.54cc STRAIGHT

dwg no: 67996 sheet 4 of 8 size A3

type: Product Customer Drawing

Copyright FCI

FCIconnect.com

PRODUCT NUMBER	TOT. PIN LGTH.		TAIL LENGTH		MATING LENGTH				BERGSTRIP™	LF OPTION
	DIM F	DIM F	DIM G	DIM G	DIM H	DIM H	PACKAGING	NOTES	AVAILABLE	
69132–XYY	0.760	19.30	0.120	3.05	0.540	13.72	POLY BAGS/TUBES	–	NO	NOTE 1,13
69133–XYY	0.615	15.62	0.285	7.24	0.230	5.84	POLY BAGS	–	NO	
69157–XYY	0.410	10.41	0.110	2.79	0.200	5.08	POLY BAGS	–	NO	
71217–XYYH	1.000	25.40	0.450	11.43	0.450	11.43	POLY BAGS	–	NO	
71222–XYYH	0.850	21.59	0.250	6.35	0.500	12.70	POLY BAGS	–	NO	
72273–XYYH	0.725	18.42	0.110	2.79	0.515	13.08	POLY BAGS	–	NO	
72448–XYYH	0.658	16.71	0.172	4.37	0.386	9.80	POLY BAGS	–	NO	
72455–XYYH	0.598	15.19	0.180	4.57	0.318	8.08	POLY BAGS	–	NO	
72455–632HG	0.598	15.19	0.180	4.57	0.318	8.08	GPAX	NOTE 1	NO	
73503–XYYH	0.420	10.67	0.120	3.05	0.200	5.08	POLY BAGS	–	NO	
73596–XYYH	0.795	20.19	0.110	2.79	0.585	14.86	POLY BAGS	–	NO	
74317–XYYH	0.532	13.51	0.309	7.85	0.123	3.12	POLY BAGS	NOTE 11	NO	
74318–XYYH	0.592	15.04	0.369	9.37	0.123	3.12	POLY BAGS	NOTE 11	NO	
74999–XYYH	0.508	12.90	0.090	2.29	0.318	8.08	POLY BAGS	–	NO	
78212–XYY	0.710	18.03	0.350	8.89	0.260	6.60	POLY BAGS	–	NO	
78233–XYY	0.568	14.43	0.150	3.81	0.318	8.08	POLY BAGS	–	NO	
78269–XYY	0.385	9.78	0.095	2.41	0.190	4.83	POLY BAGS	–	NO	
78286–XYY	0.500	12.70	0.160	4.06	0.240	6.10	POLY BAGS/TUBES	–	NO	
78932–XYY	UNAVAILABLE		UNAVAILABLE		UNAVAILABLE			–	–	
78933–XYY	0.695	17.65	0.285	7.24	0.310	7.87	POLY BAGS	–	NO	
78988–XYY	0.540	13.72	0.135	3.43	0.305	7.75	POLY BAGS	–	NO	
78989–XYY	UNAVAILABLE		UNAVAILABLE		UNAVAILABLE			–	–	
78990–XYY	UNAVAILABLE		UNAVAILABLE		UNAVAILABLE			–	–	
78991–XYY	UNAVAILABLE		UNAVAILABLE		UNAVAILABLE			–	–	
78992–XYY	UNAVAILABLE		UNAVAILABLE		UNAVAILABLE			–	–	
78993–XYY	UNAVAILABLE		UNAVAILABLE		UNAVAILABLE			–	–	
78994–XYY	UNAVAILABLE		UNAVAILABLE		UNAVAILABLE			–	–	NOTE 1,13

mat'l. code NOTE 2 & 3	surface ISO 1302 ✓	tolerance ISO 406 ISO 1101	projection
ltr / ecn no / dr / date	tolerances unless otherwise specified		INCH/MM
DG	angles 0°±2°	linear .XX±.01/.X±.3 / .XXX±0.005/.XX±.13 / .XXXX±.0020/.XXX±.051	scale 2:1
dr	T.BREWBAKER	12/21/94	
engr	T.HANNA	12/21/94	
chr	J.MURPHY	12/21/94	
appd	T.HANNA	12/21/94	
sheet index / revision sheet			

product family: BERGSTIK

title: BERGSTIK II HEADER D/R .100/2.54cc STRAIGHT

dwg no: 67996 sheet 5 of 8 size A3

type: Product Customer Drawing

form: A3

FCIconnect.com
Copyright FCI

PRODUCT NUMBER	TOT. PIN LGTH.		TAIL LENGTH		MATING LENGTH				BERGSTRIP™	LF
	DIM F	DIM F	DIM G	DIM G	DIM H	DIM H	PACKAGING	NOTES	AVAILABLE	OPTION
	ENGLISH	METRIC	ENGLISH	METRIC	ENGLISH	METRIC				
78995–XYY	UNAVAILABLE		UNAVAILABLE		UNAVAILABLE			–	–	NOTE 1,13
78996–XYY	UNAVAILABLE		UNAVAILABLE		UNAVAILABLE			–	–	
79242–XYY	0.930	23.62	0.340	8.64	0.490	12.45	POLY BAGS	–	NO	
79243–XYY	1.230	31.24	0.390	9.91	0.740	18.80	POLY BAGS	–	NO	
79244–XYY	UNAVAILABLE		UNAVAILABLE		UNAVAILABLE			–	–	
79268–XYY	1.020	25.91	0.120	3.05	0.800	20.32	POLY BAGS	–	NO	
79271–XYY	1.100	27.94	0.500	12.70	0.500	12.70	POLY BAGS	–	NO	
79425–XYY	0.410	10.41	0.120	3.05	0.190	4.83	POLY BAGS	–	NO	
79821–XYY	0.730	18.54	0.200	5.08	0.430	10.92	POLY BAGS	–	NO	
84610–XYYH	0.380	9.65	0.120	3.05	0.160	4.06	POLY BAGS	–	NO	
84760–XYYH	0.870	22.09	0.150	3.81	0.620	15.74	POLY BAGS	–	NO	
84784–XYYH	1.130	28.70	0.122	3.09	0.908	23.06	POLY BAGS	–	NO	
84934–XYYH	1.375	34.93	0.625	15.88	0.650	16.51	POLY BAGS	–	NO	
84976–XYYH	0.730	18.54	0.400	10.16	0.230	5.84	POLY BAGS	–	NO	
86503–XYY	0.470	11.94	0.120	3.05	0.250	6.35	POLY BAGS	–	NO	
86581–XYY	0.450	11.43	0.120	3.05	0.230	5.84	POLY BAGS	NOTE 8	NO	
86817–XYY	0.925	23.50	0.120	3.05	0.705	17.91	POLY BAGS	–	NO	
86827–XYY	0.700	17.78	0.120	3.05	0.480	12.19	POLY BAGS	–	NO	
86832–XYY	0.525	13.34	0.100	2.54	0.325	8.26	POLY BAGS	–	NO	
86834–XYY	1.335	33.91	0.585	14.86	0.650	16.51	POLY BAGS	–	NO	
86836–XYY	0.870	22.10	0.120	3.05	0.650	16.51	POLY BAGS	–	NO	
86837–XYY	0.600	15.24	0.120	3.05	0.380	9.65	POLY BAGS	–	NO	
87037–XYY	1.240	31.50	0.120	3.05	1.020	25.91	POLY BAGS	–	NO	
87052–XYY	0.990	25.15	0.120	3.05	0.770	19.56	POLY BAGS	–	NO	
87203–XYY	0.545	13.84	0.150	3.81	0.295	7.49	POLY BAGS	–	NO	
87344–XYY	1.375	34.93	0.219	5.56	1.056	26.82	POLY BAGS	–	NO	NOTE 1,13

FCIconnect.com

Copyright FCI

mat'l. code NOTE 2 & 3	surface ISO 1302	tolerance ISO 406 ISO 1101	projection
ltr / ecn no / dr / date	tolerances unless otherwise specified		
DG	angles 0°±2°	linear .XX±.01/.X±.3 / .XXX±0.005/.XX±.13 / .XXXX±.0020/.XXX±.051	INCH/MM
			scale 2:1
	dr	T.BREWBAKER	12/21/94
	engr	T.HANNA	12/21/94
	chr	J.MURPHY	12/21/94
	appd	T.HANNA	12/21/94
sheet index / revision sheet			

product family: BERGSTIK

title: BERGSTIK II HEADER D/R .100/2.54cc STRAIGHT

dwg no: 67996 | sheet 6 of 8 | size A3

type: Product Customer Drawing

form: A3

PRODUCT NUMBER	TOT. PIN LGTH.		TAIL LENGTH		MATING LENGTH				BERGSTRIP™	LF
	DIM F	DIM F	DIM G	DIM G	DIM H	DIM H	PACKAGING	NOTES	AVAILABLE	OPTION
	ENGLISH	METRIC	ENGLISH	METRIC	ENGLISH	METRIC				
87345–XYY	1.218	30.94	0.406	10.31	0.712	18.08	POLY BAGS	–	NO	NOTE 1,13
87348–XYY	0.930	23.62	0.100	2.54	0.730	18.54	POLY BAGS	–	NO	
87349–XYY	0.890	22.61	0.110	2.79	0.680	17.27	POLY BAGS	–	NO	
87381–XYY	0.645	16.38	0.100	2.54	0.445	11.30	POLY BAGS	–	NO	
87382–XYY	0.675	17.15	0.100	2.54	0.475	12.07	POLY BAGS	–	NO	
87503–XYYH	0.630	16.00	0.110	2.79	0.420	10.67	POLY BAGS	–	NO	
87869–XYY	0.690	17.53	0.230	5.84	0.360	9.14	POLY BAGS	–	NO	
87894–XYY	0.588	14.94	0.170	4.32	0.318	8.08	POLY BAGS	–	NO	
87900–XYY	0.940	23.88	0.120	3.05	0.720	18.29	POLY BAGS	–	NO	
87901–XYY	1.040	26.42	0.120	3.05	0.820	20.83	POLY BAGS	–	NO	
87903–XYY	0.963	24.46	0.337	8.56	0.526	13.36	POLY BAGS	–	NO	
88797–XYY	0.950	24.13	0.320	8.13	0.530	13.46	POLY BAGS	–	NO	
88812–XYY	0.415	10.54	0.085	2.16	0.230	5.84	POLY BAGS/TUBES	NOTE 8	NO	
88886–XYY	1.306	33.17	0.276	7.01	0.930	23.62	POLY BAGS	–	NO	
89446–XYY	0.930	23.62	0.120	3.05	0.710	18.03	POLY BAGS	–	NO	
89540–XYY	0.760	19.30	0.280	7.11	0.380	9.65	POLY BAGS	–	NO	
89542–XYY	1.065	27.05	0.125	3.18	0.840	21.34	POLY BAGS	–	NO	
89639–XYY	1.260	32.00	0.118	3.00	1.042	26.47	POLY BAGS	–	NO	
91828–XYY	0.450	11.43	0.120	3.05	0.230	5.84	TUBES	–	NO	
92417–XYY	0.530	13.46	0.110	2.79	0.320	8.13	POLY BAGS	–	NO	
93216–XYYH	0.573	14.55	0.155	3.94	0.318	8.08	POLY BAGS/TUBES	–	NO	
93216–632HG	0.573	14.55	0.155	3.94	0.318	8.08	GPAX	NOTE 1	NO	
93217–XYYH	0.395	10.03	0.095	2.41	0.200	5.08	POLY BAGS	–	NO	
93254–XYY	0.563	14.30	0.110	2.79	0.353	8.97	POLY BAGS	–	NO	NOTE 1,13

FCIconnect.com
Copyright FCI

mat'l. code NOTE 2 & 3	surface ISO 1302	tolerance ISO 406 ISO 1101	projection
ltr / ecn no / dr / date	tolerances unless otherwise specified		INCH/MM
DG	angles 0°±2°	linear .XX±.01/.X±.3 / .XXX±0.005/.XX±.13 / .XXXX±.0020/.XXX±.051	scale 2:1
	dr T.BREWBAKER 12/21/94		
	engr T.HANNA 12/21/94		
	chr J.MURPHY 12/21/94		
	appd T.HANNA 12/21/94		
sheet index / revision sheet			

product family: BERGSTIK

title: BERGSTIK II HEADER D/R .100/2.54cc STRAIGHT

dwg no 67996 — sheet 7 of 8 — size A3

type Product Customer Drawing

form: A3

PRODUCT NUMBER	TOT. PIN LGTH.		TAIL LENGTH		MATING LENGTH				BERGSTRIP	LF
	DIM F	DIM F	DIM G	DIM G	DIM H	DIM H	PACKAGING	NOTES	AVAILABLE	OPTION
	ENGLISH	METRIC	ENGLISH	METRIC	ENGLISH	METRIC				
94010-XYYH	0.756	19.20	0.350	8.89	0.306	7.77	POLY BAGS	–	NO	NOTE 1,13
94532-XYYH	1.250	31.75	0.450	11.43	0.700	17.78	POLY BAGS	–	NO	
95105-XYY	0.370	9.40	0.126	3.20	0.144	3.66	POLY BAGS	–	NO	
95645-XYYH	0.350	8.89	0.100	2.54	0.150	3.81	POLY BAGS	–	NO	
95652-XYYH	0.500	12.70	0.070	1.78	0.330	8.38	POLY BAGS	–	NO	
95665-XYYH	0.835	21.21	0.335	8.51	0.400	10.16	POLY BAGS	–	NO	
95687-XYYH	0.820	20.83	0.360	9.14	0.360	9.14	POLY BAGS	–	NO	
95712-XYYH	1.090	27.69	0.110	2.79	0.880	22.35	POLY BAGS	–	NO	
95727-XYYH	0.825	20.96	0.110	2.79	0.615	15.62	POLY BAGS	–	NO	
98181-XYYH	0.760	19.30	0.218	5.54	0.442	11.23	POLY BAGS	–	NO	
98217-XYYH	0.756	19.20	0.328	8.33	0.328	8.33	POLY BAGS	–	NO	
98329-XYYH	0.930	23.62	0.415	10.54	0.415	10.54	POLY BAGS	–	NO	
98854-XYYH	0.450	11.43	0.120	3.05	0.230	5.84	TUBES	–	NO	
10017852-XYYH	0.450	11.43	0.125	3.18	0.225	5.72	POLYBAGS	–	NO	
10074747-XYYH	0.850	21.59	0.520	13.21	0.230	5.84	POLYBAGS	–	NO	NOTE 1,13

FCIconnect.com

Copyright FCI

mat'l. code NOTE 2 & 3	surface ISO 1302	tolerance ISO 406 ISO 1101	projection
ltr / ecn no / dr / date	tolerances unless otherwise specified		
DG	angles 0°±2°	linear .XX±.01/.X±.3 / .XXX±0.005/.XX±.13 / .XXXX±.0020/.XXX±.051	INCH/MM
			scale 2:1
	dr T.BREWBAKER 12/21/94		
	engr T.HANNA 12/21/94		
	chr J.MURPHY 12/21/94		
	appd T.HANNA 12/21/94		
sheet index / revision sheet			

product family: BERGSTIK

title: BERGSTIK II HEADER D/R .100/2.54cc STRAIGHT

dwg no: 67996 sheet 8 of 8 size A3

type: Product Customer Drawing

form: A3

Компания «ЭлектроПласт» предлагает заключение долгосрочных отношений при поставках импортных электронных компонентов на взаимовыгодных условиях!

Наши преимущества:

- Оперативные поставки широкого спектра электронных компонентов отечественного и импортного производства напрямую от производителей и с крупнейших мировых складов;
- Поставка более 17-ти миллионов наименований электронных компонентов;
- Поставка сложных, дефицитных, либо снятых с производства позиций;
- Оперативные сроки поставки под заказ (от 5 рабочих дней);
- Экспресс доставка в любую точку России;
- Техническая поддержка проекта, помощь в подборе аналогов, поставка прототипов;
- Система менеджмента качества сертифицирована по Международному стандарту ISO 9001;
- Лицензия ФСБ на осуществление работ с использованием сведений, составляющих государственную тайну;
- Поставка специализированных компонентов (Xilinx, Altera, Analog Devices, Intersil, Interpoint, Microsemi, Aeroflex, Peregrine, Syfer, Eurofarad, Texas Instrument, Miteq, Cobham, E2V, MA-COM, Hittite, Mini-Circuits,General Dynamics и др.);

Помимо этого, одним из направлений компании «ЭлектроПласт» является направление «Источники питания». Мы предлагаем Вам помощь Конструкторского отдела:

- Подбор оптимального решения, техническое обоснование при выборе компонента;
- Подбор аналогов;
- Консультации по применению компонента;
- Поставка образцов и прототипов;
- Техническая поддержка проекта;
- Защита от снятия компонента с производства.

Как с нами связаться

Телефон: 8 (812) 309 58 32 (многоканальный)
Факс: 8 (812) 320-02-42
Электронная почта: org@eplast1.ru
Адрес: 198099, г. Санкт-Петербург, ул. Калинина, дом 2, корпус 4, литера А.