3M™ Four-Wall Header

.100" × .100" Latch/Ejector, Straight and Right Angle 3000 Series

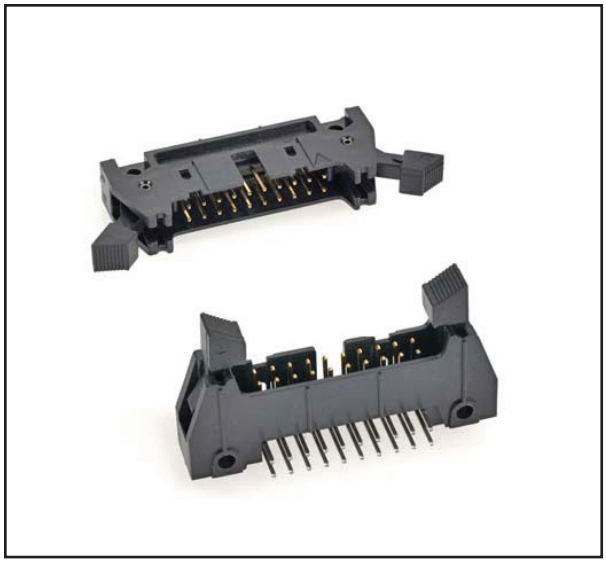

- Military (with 3M's 3518 & N3518 polarizing key) and centerbump polarization
- Optional ejector latches
- Mounting holes for securing header to board
- Optional polarizing posts available
- High temperature insulator option suitable for "no lead" soldering operations
- High temperature option suitable for reflow soldering using "paste in hole" techniques
- Solder tail option
- See the Regulatory Information Appendix (RIA) in the "RoHS compliance" section of www.3Mconnectors.com for compliance information

Date Modified: October 2, 2012

Physical

Insulator:	
Material:	Glass Filled Polyester (PBT) Glass Filled Polyester (PCT) - (High Temp Option)
Flammability:	UL 94V-0
Color:	Gray (PBT), Black (PCT)
Contact:	
Material:	Copper Alloy
Plating:	
Underplating:	100 µ" [2.54 µm] Nickel - Overall
Wiping Area:	30 µ" [0.76 µm] Gold
Solder Tails:	Tin Lead or Matte Tin (See Ordering Information)
Marking:	3M Logo, Part Identification Number and Orientation Triangle

Electrical

Current Rating:	5.00 A, 1 Contact Powered 3.00 A, 6 Contacts Powered 1.75 A, All Contacts Powered Rating Conditions: EIA-364-070 Method 2, 30°C maximum temperature rise, 20% derated. Reference appropriate 3M Product Specification for detailed current derating curves.
Insulation Resistance:	$>1 \times 10^9$ **Ω** at 500 V_{DC}
Withstanding Voltage:	1,000 V_{RMS} at Sea Level

Environmental

Temperature Rating:	-55°C to +105°C
Process Rating:	High Temp PCT insulator version: 260°C, per J-STD-020C, single pass PBT insulator version: 191°C, maximum insulator temperature, solder wave process only
Moisture Sensitivity Level:	1 (per J-STD-020C) High Temp. (PCT) versions only

UL File No.: E68080

3M is a trademark of 3M Company.
For technical, sales or ordering information call
800-225-5373

3M™ Four-Wall Header

.100" × .100" Latch/Ejector, Straight and Right Angle

3000 Series

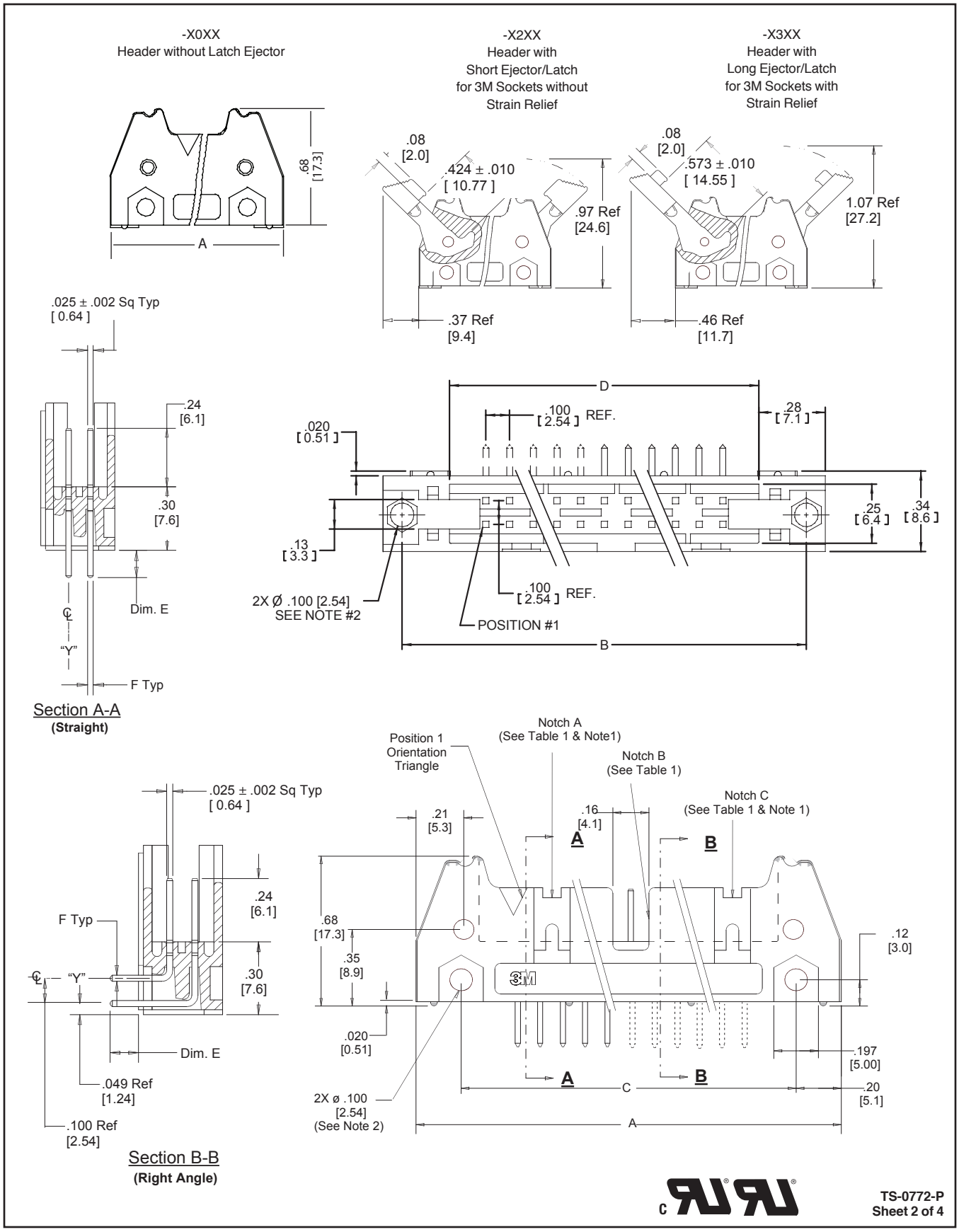

TS-0772-P
Sheet 2 of 4

3M™ Four-Wall Header

.100" × .100" Latch/Ejector, Straight and Right Angle

3000 Series

Table 1						
Pin Qty	3M Part Number	Dimensions				Polarizing Notches
		A	B	C	D	
06	3869	1.065 (27.05)	0.905 (22.99)	0.665 (16.89)	0.505 (12.83)	B*
08	3889	1.165 (29.59)	1.005 (25.53)	0.765 (19.43)	0.605 (15.37)	B*
10	3793	1.265 (32.13)	1.105 (28.04)	0.865 (21.97)	0.705 (17.91)	BC
14	3314	1.465 (37.21)	1.305 (33.12)	1.065 (27.05)	0.905 (22.99)	BC
16	3408	1.565 (39.75)	1.405 (35.66)	1.165 (29.59)	1.005 (25.53)	ABC
20	3428	1.765 (44.83)	1.605 (40.74)	1.365 (34.67)	1.205 (30.61)	ABC
24	3627	1.965 (49.91)	1.805 (45.82)	1.565 (39.75)	1.405 (35.69)	ABC
26	3429	2.065 (52.45)	1.905 (48.36)	1.665 (42.29)	1.505 (38.23)	ABC
30	3440	2.265 (57.53)	2.105 (53.44)	1.865 (47.37)	1.705 (43.31)	ABC
34	3431	2.465 (62.61)	2.305 (58.52)	2.065 (52.45)	1.905 (48.39)	ABC
40	3432	2.765 (70.23)	2.605 (66.14)	2.365 (60.07)	2.205 (56.01)	ABC
50	3433	3.265 (82.93)	3.105 (78.84)	2.865 (72.77)	2.705 (68.71)	ABC
60	3372	3.765 (95.63)	3.605 (91.54)	3.365 (85.47)	3.205 (81.41)	ABC
64	3764	3.965 (100.71)	3.805 (96.62)	3.565 (90.55)	3.405 (86.49)	ABC

* Available without center notch B. Contact 3M.

Inch
(mm)

Tolerance Unless Noted			
	.0	.00	.000
Inch	± .1	± .01	± .005

[ ] Dimensions for Reference only

Table 2						
3M Part Number Suffix	Contact Tail	Dim E	Pin Cross Section			Dim G
-5XX2	Solder Tail for .062 (1.57) Thick PC Board	.112 ± .010 (2.84)	Dim F .0245 ± .0005 (0.622)	Diagonals .028 ± .001 (0.71)	Corner Radii .0075 Ref (0.191)	0.035 ± .003 (0.89) (See Note 3)
-6XX2						
-5X03	Solder Tail for 0.94 (2.39) to .125 (3.18) Thick PC Board	.155 ± .010 (3.94)	.0245 ± .0005 (0.622)	.028 ± .001 (0.71)	.0075 Ref (0.191)	0.035 ± .003 (0.89)
-6X03						

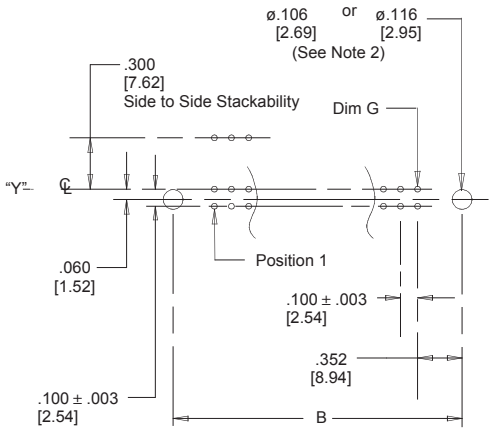

Recommended Mounting Hole Pattern
(Straight)

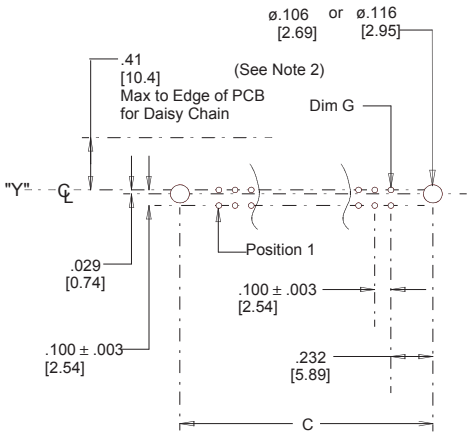

Recommended Mounting Hole Pattern
(Right Angle)

Notes: 1. Notches A & C will accomodate 3M Polarizing Keys (3M Part #3518 or #N3518).
2. Mounting hardware: From solder side of pc board use #4-24 thread cutting screw (3M Part # 3341-5) and .116 [2.95] dia mounting hole. For right angle version only, #2-56 bolt and nut (3M Part # 3341-6) with .106 [2.69] dia mounting hole may be used. See illustrations on page 4.
3. The recommended PCB hole size for the kinked tail positions on the .112 solder tail connector is .035 ± .002. See page 4 for kink position details (K2 version).
4. Contact your 3M sales representative for custom requirements.

Ordering Information

X3XXX-XXXXXX

N = High Temp Black (PCT)/(RB Plating Req'd)
Blank = Std. Temp Gray (PBT) /(Blank or UB Pltg. Req'd.)

3M Part Number
(See Table 1)

Pin Configuration
5 = Right Angle Solder Tails
6 = Straight Solder Tails

Latch/Ejector System
0 = No Latch/Ejector installed
2 = Short Roll Pin Latch/Ejectors
3 = Long, Roll Pin Latch/Ejectors
5 = Short, Snap-In Latch/Ejectors
6 = Long, Snap-In Latch/Ejectors

Tail
02 = for .062 [1.57] thick board
03 = for .094 to .125 [2.39 to 3.18] thick board
K2 = kinked for .062 [1.57] thick board

Plating
RB = 30 µ" [0.76 µm] Gold and 200 µ" [5.08 µm] Matte Tin
(App. E1 & C1 Apply)
Blank or UB = 30 µ" (0.76 µm] Gold and 200 µ" [5.08 µm]
Tin Lead (App. E3 & C2 Apply)

TS-0772-P
Sheet 3 of 4

3M is a trademark of 3M Company.

For technical, sales or ordering information call
800-225-5373

3M™ Four-Wall Header

.100" × .100" Latch/Ejector, Straight and Right Angle

3000 Series

Part Customization

This spec sheet details our standard offering.

3M has several capabilities that can provide a part tailored to your specific needs. Ask your 3M sales representative or customer service for more details.

Both snap in and roll pin latches may be ordered separately. Snap in and roll style latches are dimensionally and functionally equivalent. If ordering snap-in or roll pin style latches separately, please use the below chart.

	Short Latch	Long Latch	Latch Style	Color
Standard Temperature (PBT)	3505-2	3505-3	Roll Pin	Gray
High Temperature (PCT)	N3505-2B	N3505-3B	Roll Pin	Black
High Temperature (PBT)	3505-30	3505-31	Snap-In	Gray
High Temperature (PPA)	N3505-30B	N3505-31B	Snap-In	Black

- Selective pin removal (ATA or other compatability)
- Wire wrap tails styles

Mounting Hardware

3341-5
(Installed from bottom of board)

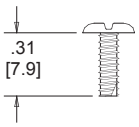

Panhead Thread Cutting Screw:
#4-24 X 5/16"
Type: USA Std BT, Federal BG

3341-6
(Must be inserted prior to latch on vertical headers)

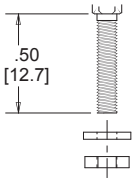

Hex Head Bolt, Nut and Washer
Bolt - #2-56 X 1/2"

3341-5 & 6
Material - Stainless Steel

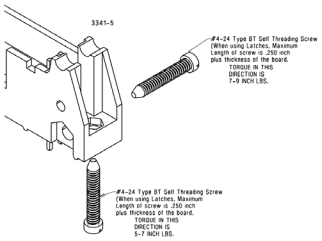

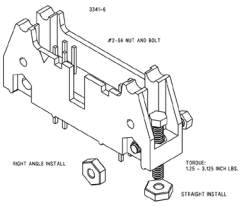

Polarizing Post

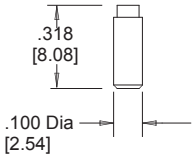

3201-4	LCP	Black
3201-5	PBT	Gray

Note: Insert Post into one mounting hardware hole on bottom of header. Set post to protrude .115" [2.92].

2500 & 3000 Series Shrouded Header					
Total Number of Pins	Number of Tails Kinked	Positions Kinked			
10	4	3	4	7	8
14	4	3	4	11	12
16	4	3	4	13	14
20	4	3	4	17	18
24	4	3	4	21	22
26	4	3	4	23	24
30	4	5	6	25	26
34	4	7	8	27	28
36	4	7	8	27	28
40	4	7	8	33	34
50	4	7	8	43	44
60	4	11	12	49	50
64	4	11	12	53	54

Kinked Tail Detail:
Kink is located .05" below bottom surface of plastic.
External radius of kink toward part centerline.

Polarizing Keys

			Dim A
N3518	LCP	Black	.02
3518	PBT	Gray	.02

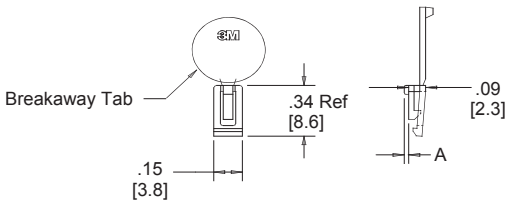

Note: #2216 B/A Scotchweld can be used to adhere keys.

TS-0772-P
Sheet 4 of 4

3M is a trademark of 3M Company.

Important Notice

All statements, technical information, and recommendations related to 3M's products are based on information believed to be reliable, but the accuracy or completeness is not guaranteed. Before using this product, you must evaluate it and determine if it is suitable for your intended application. You assume all risks and liability associated with such use. Any statements related to the product which are not contained in 3M's current publications, or any contrary statements contained on your purchase order shall have no force or effect unless expressly agreed upon, in writing, by an authorized officer of 3M.

Warranty; Limited Remedy; Limited Liability.

This product will be free from defects in material and manufacture for a period of one (1) year from the time of purchase. **3M MAKES NO OTHER WARRANTIES INCLUDING, BUT NOT LIMITED TO, ANY IMPLIED WARRANTY OF MERCHANTABILITY OR FITNESS FOR A PARTICULAR PURPOSE.** If this product is defective within the warranty period stated above, your exclusive remedy shall be, at 3M's option, to replace or repair the 3M product or refund the purchase price of the 3M product. **Except where prohibited by law, 3M will not be liable for any indirect, special, incidental or consequential loss or damage arising from this 3M product, regardless of the legal theory asserted.**

3M Electronics Solutions Division
6801 River Place Blvd.
Austin, TX 78726-9000
U.S.A.
1-800-225-5373
www.3Mconnectors.com

Please recycle. Printed in USA.
© 3M 2012. All rights reserved.
RIA-2217B-E

Компания «ЭлектроПласт» предлагает заключение долгосрочных отношений при поставках импортных электронных компонентов на взаимовыгодных условиях!

Наши преимущества:

- Оперативные поставки широкого спектра электронных компонентов отечественного и импортного производства напрямую от производителей и с крупнейших мировых складов;
- Поставка более 17-ти миллионов наименований электронных компонентов;
- Поставка сложных, дефицитных, либо снятых с производства позиций;
- Оперативные сроки поставки под заказ (от 5 рабочих дней);
- Экспресс доставка в любую точку России;
- Техническая поддержка проекта, помощь в подборе аналогов, поставка прототипов;
- Система менеджмента качества сертифицирована по Международному стандарту ISO 9001;
- Лицензия ФСБ на осуществление работ с использованием сведений, составляющих государственную тайну;
- Поставка специализированных компонентов (Xilinx, Altera, Analog Devices, Intersil, Interpoint, Microsemi, Aeroflex, Peregrine, Syfer, Eurofarad, Texas Instrument, Miteq, Cobham, E2V, MA-COM, Hittite, Mini-Circuits,General Dynamics и др.);

Помимо этого, одним из направлений компании «ЭлектроПласт» является направление «Источники питания». Мы предлагаем Вам помощь Конструкторского отдела:

- Подбор оптимального решения, техническое обоснование при выборе компонента;
- Подбор аналогов;
- Консультации по применению компонента;
- Поставка образцов и прототипов;
- Техническая поддержка проекта;
- Защита от снятия компонента с производства.

Как с нами связаться

Телефон: 8 (812) 309 58 32 (многоканальный)
Факс: 8 (812) 320-02-42
Электронная почта: org@eplast1.ru
Адрес: 198099, г. Санкт-Петербург, ул. Калинина, дом 2, корпус 4, литера А.