2mm Double-Row Connector (Product Compliant to UL/CSA Standard)

DF11 Series

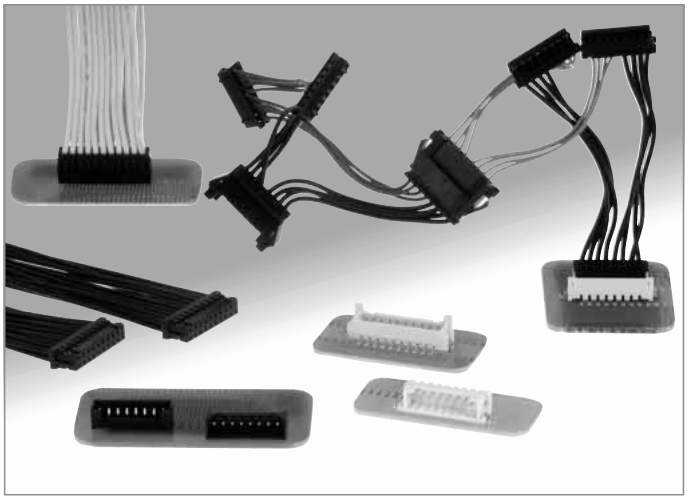

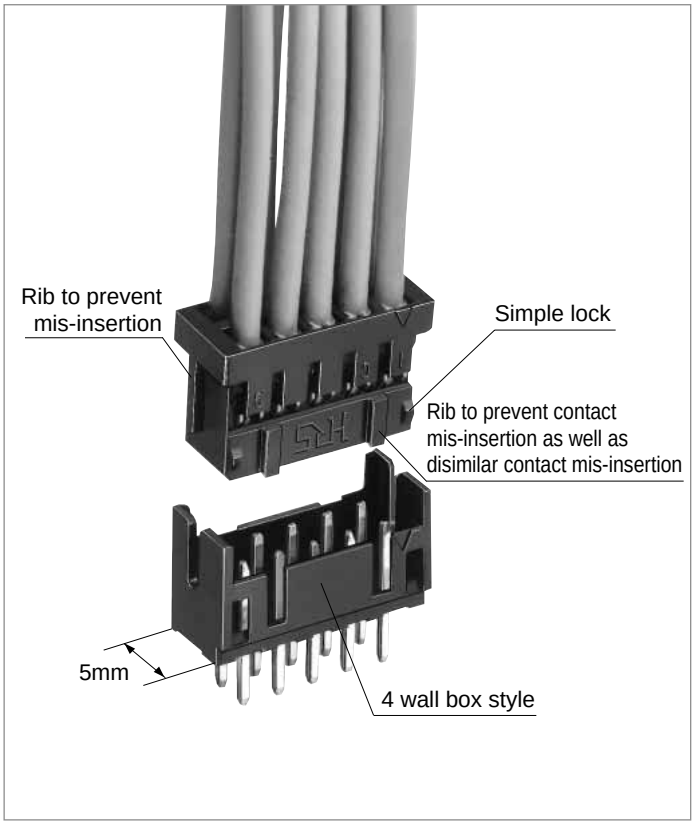

■Features

1. Space-saving on Board Realized

Double rows of 2mm pitch contact has been condensed within the 5mm width.
The multiple number of signals can be secured in the same space as the conventional 2mm single-row contact.

2. Broad Variation

The insulation displacement and crimping methods are prepared for connection. Thus, board to cable, in-line, board to board connectors are provided in order to widen a board design variation.
In addition, "Gold" or "Tin" can be selected for the plating according application, while the SMT products line up.

3. Applicable Wire Covers Wide Range

According to the double rows of 2mm pitch compact design, the applicable wire can cover AWG22 to 30.

4. The ID Type Connector Achieves Connection Work.

Using the full automatic insulation displacement machine, the complicated multi-harness can be easily connected, reducing the man-hour and eliminating the manual work process.

■Features of DF11 Insulation Displacement Machine (Single Core Punching Full Automatic ID Machine AM700/DF11)

● 5 Major Features of ID Machine AM700/DF11

1. Perform the multi-harness.
2. The setup time has been widely reduced. (10 minutes maximum)
3. Space saving design.
   (About half space compared with the conventional machine)
4. Minimize initial cost with low cost.
5. The harness data can be saved in the floppy disk and easily changed.

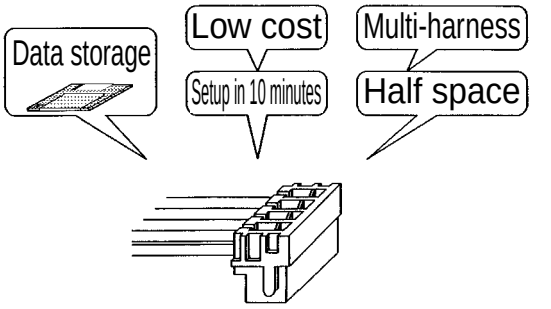

■Points

Since the DF11 insulation displacemention allows double rows ID with a single part, the harness service is completed with machine connection only.

■Product Specifications

Rating	Current rating (Note 1)	Crimping	Wire size	AWG #22 to #26	: 2A	Operating Temperature Range	-30 to 85℃ Note 2
				AWG #28	: 1A	Operating Humidity Range	40 to 80%
				AWG #30	: 0.5A		
		Insulation Displacement	Wire size	AWG #26	: 1A	Storage Temperature Range	-10 to 60℃ Note 3
	Voltage rating	Crimping	250V AC	Insulation Displacement	100V AC	Storage Humidity Range	40 to 70%

UL-CSA Safety Standard Approved Specification				
Rating	Current rating	Wire size	AWG #22	: 2A
			AWG #24 to #28	: 1A
			AWG #30	: 0.5A
	Voltage rating	30V AC		

■UL·CSA Safety Standard File No.
UL :E52653
CSA :LR95109

Item	Specification	Condition	
1. Insulation Resistance	1000M ohms min.	500V DC	
2. Withstanding voltage	No flashover or insulation breakdown.	650V AC/1 minute	
3. Contact Resistance	30m ohms max.	100mA	
4. Single Insertion/Extraction Force	0.3N (30gf) min., 4.4N(450gf) max.	Measured by the square steel-made pin of 0.5±0.002mm	
5. Vibration	No electrical discontinuity of 1μs or more	Frequency: 10 to 55 Hz, single amplitude of 0.75 mm, 2 hours in each of the 3 directions.	
6. Humidity (Steady state)	Contact resistance: 30m ohms max. Insulation resistance: 500M ohms min.	96 hours at temperature of 40℃ and humidity of 90% to 95%	
7. Temperature Cycle	Contact resistance: 30m ohms max. Insulation resistance: 1000M ohmsmin.	(-55℃: 30 minutes → 5 to 35℃: 5 to 15 minutes 85℃: 30 minutes → 5 to 35℃: 5 to 15 minutes) 5 cycles	
8. Durability (Mating/un-mating)	Contact resistance: 30m ohms max.	Tin plated: 30 cycles Gold plated:50 cycles	
9. Resistance to Soldering heat	No deformation of components affecting performance.	Flow: 260℃ for 10 seconds	Manual soldering: 300℃ for 2 seconds
		Reflow: At the recommended temperature profile	Manual soldering: 300℃ for 3 seconds

Note 1: Current rating of header is 2A.
Note 2: Includes temperature rise caused by current flow.
Note 3: The term "storage" refers to products stored for long period of time prior to mounting and use. Operating Temperature Range and Humidity range covers non conducting condition of installed connectors in storage, shipment or during transportation.
Note 4: Information contained in this catalog represents general requirements for this Series. Contact us for the drawings and specifications for a specific part number shown.

■Material

Product Type	Part	Material	Finish	Remarks
Crimping Socket	Insulator	Polyamide	Black	UL94V-0
Crimping Contact for Socket	Contact	Phosphor copper	Tin plated or gold plated	————
ID Socket	Insulator	Polyamide	Black	UL94V-0
	Contact	Phosphor copper	Tin plated	————
Receptacle	Insulator	Polyamide	Black	UL94V-0
	Contact	Phosphor copper	Tin plated or gold plated	————
Pin Header	Insulator	Polyamide	Black	UL94V-0
	Contact	Brass	Tin plated or gold plated	————
SMT Header	Insulator	Polyamide	Beige	UL94V-0
	Contact	Brass	Tin plated or gold plated	————
	Metal fittings	Brass	Tin plated	————
In-line Plug	Insulator	Polyamide	Black	UL94V-0
In-line Plug Crimping Contact	Contact	Phosphor copper	Tin plated or gold plated	————
In-line Adaptor	Insulator	Polyamide	Black	UL94V-0
	Contact	Brass	Tin plated	————

■Ordering Information

●Connector

DF11 - ＊ DS - 2C
❶ ❷ ❸ ❹ ❺

❶ Series Name : DF11	❺ Connection Form/Contact Style
❷ Number of Contacts : 4 to 32	C : Crimping socket
❸ Connector Type	R26 : Insulation Displacemented socket for AWG26
DS : Double Row socket	DSA: Straight through hole
DP : Double Row pin header	DS : Right angle through hole
DEP: Double Row in-line plug	V : Straight SMT
❹ Contact Pitch : 2mm	A : Adaptor

●Contact

DF11 - EP2428PCFA
❶ ❷ ❸ ❹

❶ Contact Type	❸ Contact Type/Packaging Type
Blank : For socket	SCF : Socket contact, Embossed tape
EP : For in-line plug	SC : Socket contact, Bag
❷ Applicable Wire Size	PCF : Plug contact, Embossed tape
22 : AWG22	PC : Plug contact, Bag
2428 : AWG24 to 28	❹ Plating Type
30 : AWG30	Blank : Tin plated
	A : Gold plated

■ID Socket

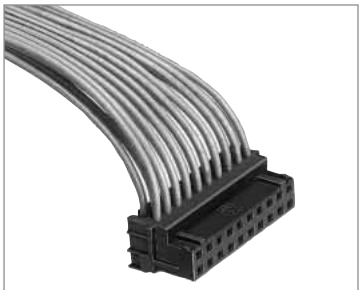

Photo: Cable connection status

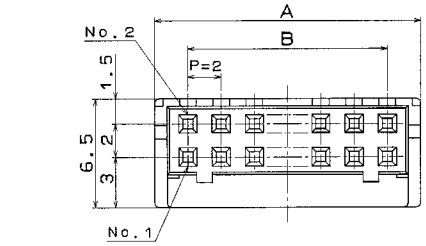

Note1: Port 1-piece indicates odd number row, and port 2- pcs. indicate even number row.

Note2: Use the dip type header as follows.
· Straight angle type: DF11-∗DP-2DSA(08)
· Angle type: DF11-∗DP-2DS(24)

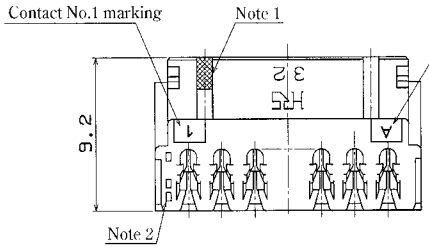

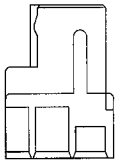

[Specific No.] –∗∗, (∗∗)
(05) :Tin plated, 100 pcs. per bag
(25) :Tin plated, Tube packaging

Unit: mm

Part Number	CL No.	Number of Contacts	A	B	Tube Packaging Quantity
DF11- 4DS-2R26(∗∗)	543-0652-0-∗∗	4	6.0	2.0	188
DF11- 6DS-2R26(∗∗)	543-0653-3-∗∗	6	8.0	4.0	140
DF11- 8DS-2R26(∗∗)	543-0654-6-∗∗	8	10.0	6.0	112
DF11-10DS-2R26(∗∗)	543-0655-9-∗∗	10	12.0	8.0	94
DF11-12DS-2R26(∗∗)	543-0656-1-∗∗	12	14.0	10.0	80
DF11-14DS-2R26(∗∗)	543-0657-4-∗∗	14	16.0	12.0	70
DF11-16DS-2R26(∗∗)	543-0658-7-∗∗	16	18.0	14.0	62
DF11-18DS-2R26(∗∗)	543-0659-0-∗∗	18	20.0	16.0	56
DF11-20DS-2R26(∗∗)	543-0660-9-∗∗	20	22.0	18.0	50
DF11-22DS-2R26(∗∗)	543-0661-1-∗∗	22	24.0	20.0	46
DF11-24DS-2R26(∗∗)	543-0662-4-∗∗	24	26.0	22.0	42
DF11-26DS-2R26(∗∗)	543-0663-7-∗∗	26	28.0	24.0	40
DF11-28DS-2R26(∗∗)	543-0664-0-∗∗	28	30.0	26.0	36
DF11-30DS-2R26(∗∗)	543-0665-2-∗∗	30	32.0	28.0	34
DF11-32DS-2R26(∗∗)	543-0666-5-∗∗	32	34.0	30.0	32

Note1: The specific No. (05) item is delivered per bag unit (100 pcs.). Please order products per bag unit.
Note2: To use the full automatic insulation displacement machine to punch the DF11 single contact, the (25) tube packaging specification should be applied.
Note3: Please order the tube packaging products by multiplying the packaging quantity (pcs.).

■Applicable Cable

Part Number	Applicable Cable	Jacket Diameter
DF11-∗DS-2R26	UL1061 AWG26 (7/0.16)	ϕ0.9 to 1.05mm

■DF11-∗DS-2R Insulation Displacement Machine

Type	Part Number	Connection Type	Remarks
Punching full automatic ID machine DF11 single contact	AM700/DF11	■Effective harness form 1. DF11-both ended, one ended 2. DF11-DF11, separation 3. DF11-DF3, separation ■Effective harness length 100 to 2,000mm ■Continuity Inspection Mechanism Equipped	The connector is applicable to (25) tube packaging.
Desktop ID Machine	SA700/DF11 CL903-0013-5	■Used for DF11 only, No restricted condition	Desktop machine for small lot

■Crimping Socket

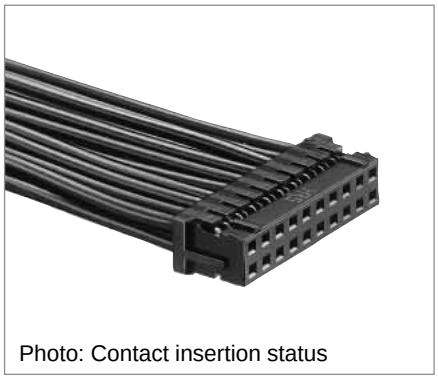

Photo: Contact insertion status

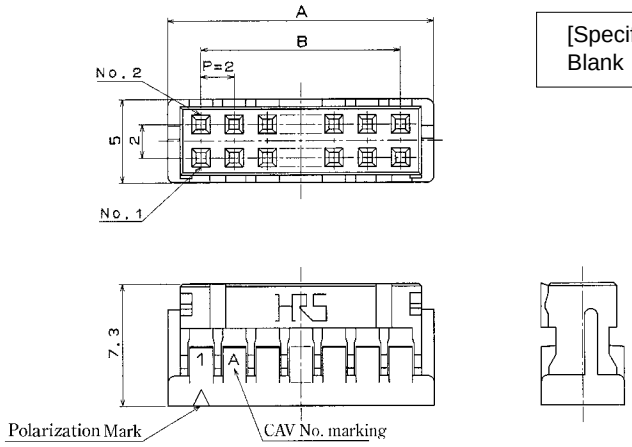

[Specific No.] –＊＊, (＊＊)
Blank :100 pcs. per pack

Unit: mm

Part Number	CL No.	Number of Contacts	A	B
DF11- 4DS-2C(＊＊)	543-0568-6-＊＊	4	6.0	2.0
DF11- 6DS-2C(＊＊)	543-0502-8-＊＊	6	8.0	4.0
DF11- 8DS-2C(＊＊)	543-0503-0-＊＊	8	10.0	6.0
DF11-10DS-2C(＊＊)	543-0504-3-＊＊	10	12.0	8.0
DF11-12DS-2C(＊＊)	543-0505-6-＊＊	12	14.0	10.0
DF11-14DS-2C(＊＊)	543-0506-9-＊＊	14	16.0	12.0
DF11-16DS-2C(＊＊)	543-0507-1-＊＊	16	18.0	14.0
DF11-18DS-2C(＊＊)	543-0508-4-＊＊	18	20.0	16.0

Part Number	CL No.	Number of Contacts	A	B
DF11-20DS-2C(＊＊)	543-0509-7-＊＊	20	22.0	18.0
DF11-22DS-2C(＊＊)	543-0510-6-＊＊	22	24.0	20.0
DF11-24DS-2C(＊＊)	543-0511-9-＊＊	24	26.0	22.0
DF11-26DS-2C(＊＊)	543-0512-1-＊＊	26	28.0	24.0
DF11-28DS-2C(＊＊)	543-0513-4-＊＊	28	30.0	26.0
DF11-30DS-2C(＊＊)	543-0514-7-＊＊	30	32.0	28.0
DF11-32DS-2C(＊＊)	543-0515-0-＊＊	32	34.0	30.0

Note: Delivered per bag unit (100 pcs.). Please order products bag pack unit.

■Receptacle (DIP)

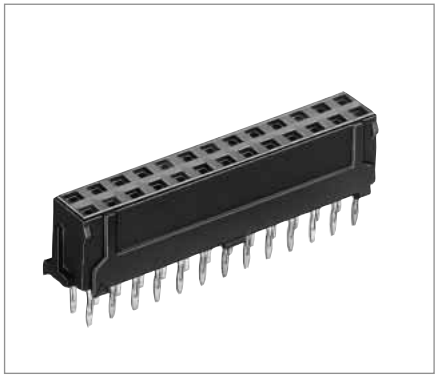

●Board Through-hole Diameter: $\phi 0.8^{+0.1}_{0}$

●Kink Prefixed Effective Diameter: $\phi 0.8^{+0.05}_{0}$

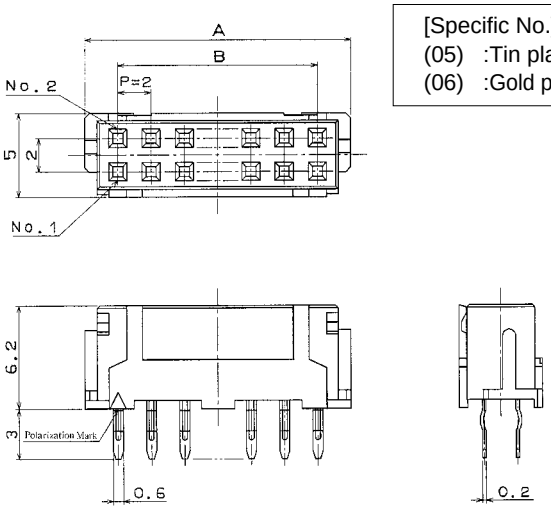

[Specific No.] –＊＊, (＊＊)
(05) :Tin plated 100 pcs. per pack
(06) :Gold plated 100 pcs. per pack

Unit: mm

Part Number	CL No.	Number of Contacts	A	B
DF11- 6DS-2DSA(＊＊)	543-0553-9-＊＊	6	8.0	4.0
DF11- 8DS-2DSA(＊＊)	543-0554-1-＊＊	8	10.0	6.0
DF11-10DS-2DSA(＊＊)	543-0555-4-＊＊	10	12.0	8.0
DF11-12DS-2DSA(＊＊)	543-0556-7-＊＊	12	14.0	10.0
DF11-14DS-2DSA(＊＊)	543-0557-0-＊＊	14	16.0	12.0
DF11-16DS-2DSA(＊＊)	543-0558-2-＊＊	16	18.0	14.0
DF11-18DS-2DSA(＊＊)	543-0559-5-＊＊	18	20.0	16.0

Part Number	CL No.	Number of Contacts	A	B
DF11-20DS-2DSA(＊＊)	543-0560-4-＊＊	20	22.0	18.0
DF11-22DS-2DSA(＊＊)	543-0561-7-＊＊	22	24.0	20.0
DF11-24DS-2DSA(＊＊)	543-0562-0-＊＊	24	26.0	22.0
DF11-26DS-2DSA(＊＊)	543-0563-2-＊＊	26	28.0	24.0
DF11-28DS-2DSA(＊＊)	543-0564-5-＊＊	28	30.0	26.0
DF11-30DS-2DSA(＊＊)	543-0565-8-＊＊	30	32.0	28.0
DF11-32DS-2DSA(＊＊)	543-0566-0-＊＊	32	34.0	30.0

Note: Delivered per bag unit (100 pcs.). Please order products per bag unit.

■Receptacle (SMT)

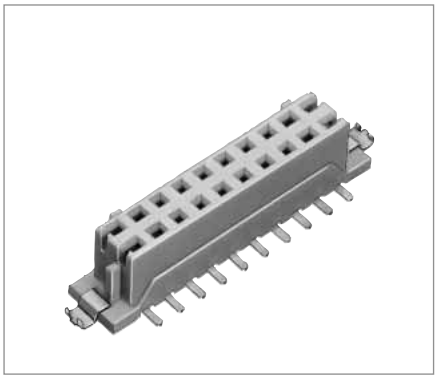

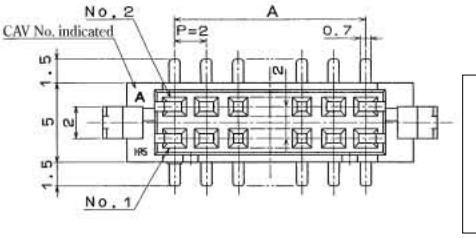

[Specific No.] –＊＊, (＊＊)
(22) :Tin plated embossed tape packaging (with vacuum pick-up cap)
(52) :Gold plated embossed tape packaging (with vacuum pick-up cap)

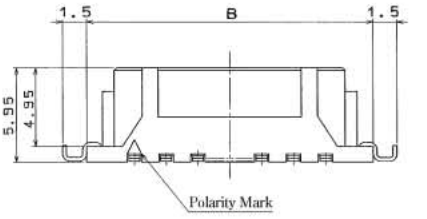

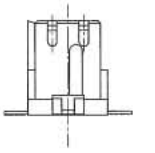

Unit: mm

Part Number	CL No.	Number of Contacts	A	B	C
DF11CZ- 4DS-2V(＊＊)	CL543-2063-0-＊＊	4	2.0	8.5	8.7
DF11CZ- 6DS-2V(＊＊)	CL543-2064-3-＊＊	6	4.0	10.5	10.7
DF11CZ- 8DS-2V(＊＊)	CL543-2065-6-＊＊	8	6.0	12.5	12.7
DF11CZ-10DS-2V(＊＊)	CL543-2066-9-＊＊	10	8.0	14.5	14.7
DF11CZ-18DS-2V(＊＊)	CL543-2070-6-＊＊	18	16.0	22.5	22.7
DF11CZ-20DS-2V(＊＊)	CL543-2071-9-＊＊	20	18.0	24.5	24.7
DF11CZ-22DS-2V(＊＊)	CL543-2072-1-＊＊	22	20.0	26.5	26.7
DF11CZ-26DS-2V(＊＊)	CL543-2074-7-＊＊	26	24.0	30.5	30.7
DF11CZ-30DS-2V(＊＊)	CL543-2076-2-＊＊	30	28.0	34.5	34.7
DF11CZ-40DS-2V(＊＊)	CL543-0584-2-＊＊	40	38.0	44.5	44.7

Note1: Tape and reel packaging(500 pieces/reel). Order by number of reels.
Note2: The 40 contacts connector is marchandized only in combination with the SMT product.
Note3: Embossed packaging products have the reel wrapped in polyethylene and include a desiccant.

■PCB mounting pattern

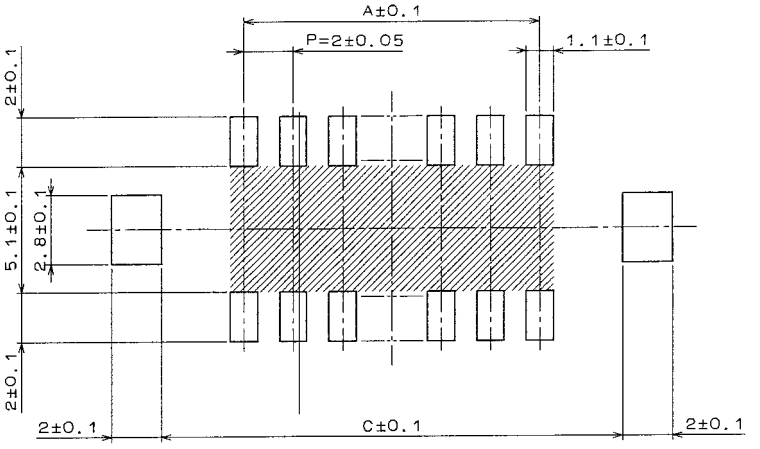

Note:If the pattern is included in the shaded area and not treated with resist, it could touch the connector contact .

■Straight Pin Header

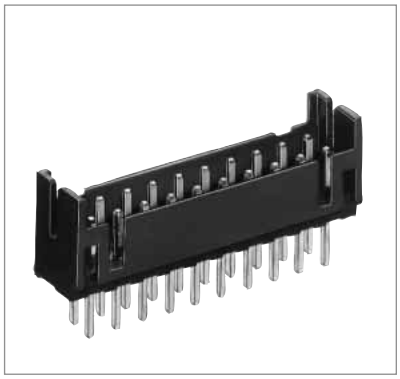

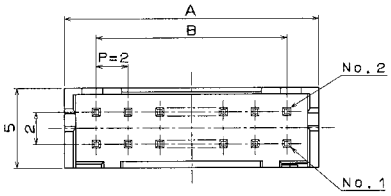

[Specific No.] –＊＊, (＊＊)
(01) : Gold plated
(08) : Tin plated
(24) : Tin plated tube package product

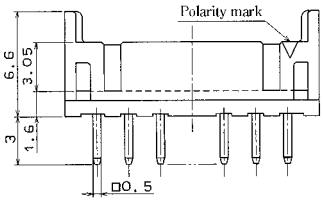

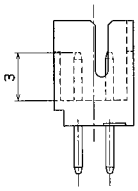

●Board Through-hole Diameter: $\phi 0.8^{+0.1}_{0}$

Unit: mm

Part Number	CL No.	Number of Contacts	A	B	Tube Package Quantity
DF11- 4DP-2DSA(＊＊)	543-0517-5-＊＊	4	6.0	2.0	81pcs.
DF11- 6DP-2DSA(＊＊)	543-0518-8-＊＊	6	8.0	4.0	61
DF11- 8DP-2DSA(＊＊)	543-0519-0-＊＊	8	10.0	6.0	49
DF11-10DP-2DSA(＊＊)	543-0520-0-＊＊	10	12.0	8.0	40
DF11-12DP-2DSA(＊＊)	543-0521-2-＊＊	12	14.0	10.0	34
DF11-14DP-2DSA(＊＊)	543-0522-5-＊＊	14	16.0	12.0	30
DF11-16DP-2DSA(＊＊)	543-0523-8-＊＊	16	18.0	14.0	27
DF11-18DP-2DSA(＊＊)	543-0524-0-＊＊	18	20.0	16.0	24

Part Number	CL No.	Number of Contacts	A	B	Tube Package Quantity
DF11-20DP-2DSA(＊＊)	543-0525-3-＊＊	20	22.0	18.0	22pcs.
DF11-22DP-2DSA(＊＊)	543-0526-6-＊＊	22	24.0	20.0	20
DF11-24DP-2DSA(＊＊)	543-0527-9-＊＊	24	26.0	22.0	18
DF11-26DP-2DSA(＊＊)	543-0528-1-＊＊	26	28.0	24.0	17
DF11-28DP-2DSA(＊＊)	543-0529-4-＊＊	28	30.0	26.0	16
DF11-30DP-2DSA(＊＊)	543-0530-3-＊＊	30	32.0	28.0	15
DF11-32DP-2DSA(＊＊)	543-0531-6-＊＊	32	34.0	30.0	14

Note1: Specific No. (01) and (08) items are delivered per bag unit (100 pcs.). Please order products per bagunit.
Note2: Please order the tube packaging products, by mutiplying a tube quantity(pcs.).

■Right Angle Pin Header

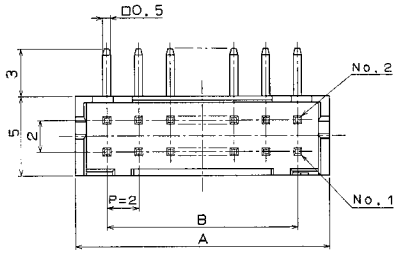

[Specific No.] –＊＊, (＊＊)
(24) : Tin plated tube packaging product
(52) : Gold plated tube packaging product

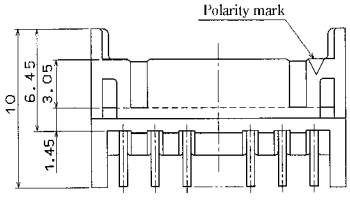

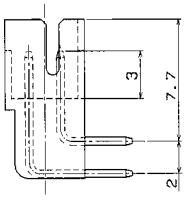

●Board Through-hole Diameter: $\phi 0.8^{+0.1}_{0}$

Unit: mm

Part Number	CL No.	Number of Contacts	A	B	Tube Package Quantity
DF11- 4DP-2DS(＊＊)	543-0533-1-＊＊	4	6.0	2.0	81pcs.
DF11- 6DP-2DS(＊＊)	543-0534-4-＊＊	6	8.0	4.0	61
DF11- 8DP-2DS(＊＊)	543-0535-7-＊＊	8	10.0	6.0	48
DF11-10DP-2DS(＊＊)	543-0536-0-＊＊	10	12.0	8.0	40
DF11-12DP-2DS(＊＊)	543-0537-2-＊＊	12	14.0	10.0	34
DF11-14DP-2DS(＊＊)	543-0538-5-＊＊	14	16.0	12.0	30
DF11-16DP-2DS(＊＊)	543-0539-8-＊＊	16	18.0	14.0	27
DF11-18DP-2DS(＊＊)	543-0540-7-＊＊	18	20.0	16.0	24

Part Number	CL No.	Number of Contacts	A	B	Tube Package Quantity
DF11-20DP-2DS(＊＊)	543-0541-0-＊＊	20	22.0	18.0	22pcs.
DF11-22DP-2DS(＊＊)	543-0542-2-＊＊	22	24.0	20.0	20
DF11-24DP-2DS(＊＊)	543-0543-5-＊＊	24	26.0	22.0	18
DF11-26DP-2DS(＊＊)	543-0544-8-＊＊	26	28.0	24.0	17
DF11-28DP-2DS(＊＊)	543-0545-0-＊＊	28	30.0	26.0	16
DF11-30DP-2DS(＊＊)	543-0546-3-＊＊	30	32.0	28.0	15
DF11-32DP-2DS(＊＊)	543-0547-6-＊＊	32	34.0	30.0	14

Note1: Please order the tube packaging product by mutiplying a tube quantity(pcs.).

■Straight Pin Header (SMT)

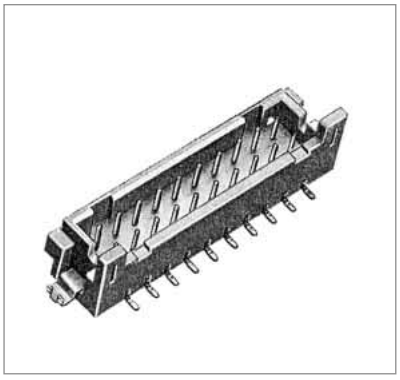

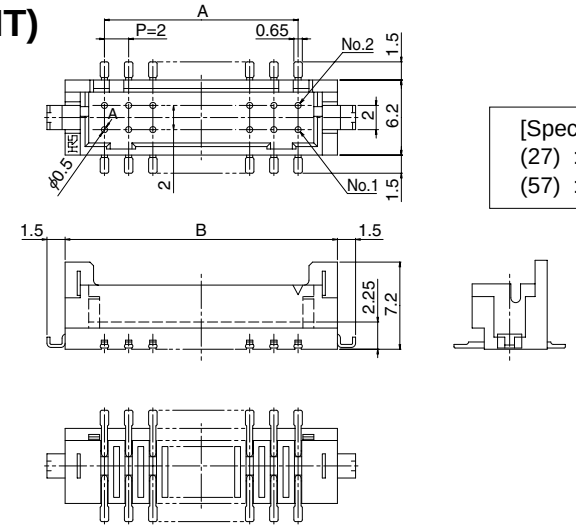

[Specific No.] –＊＊, (＊＊)
(27) :Tin plated embossed tape packaging
(57) :Gold plated embossed tape packaging

Unit: mm

Tin plated		Gold plated						
Part Number	CL Numer	Part Number	CL Numer	Number of contacts	A	B	C	
DF11CZ- 4DP-2V(27)	0543-2047-4-27	DF11C- 4DP-2V(57)	0543-0682-1-57	4	2.0	8.5	8.7	
DF11CZ- 6DP-2V(27)	0543-2048-7-27	DF11C- 6DP-2V(57)	0543-0683-4-57	6	4.0	10.5	10.7	
DF11CZ- 8DP-2V(27)	0543-2049-0-27	DF11C- 8DP-2V(57)	0543-0684-7-57	8	6.0	12.5	12.7	
DF11CZ-10DP-2V(27)	0543-2050-9-27	DF11C-10DP-2V(57)	0543-0685-0-57	10	8.0	14.5	14.7	
DF11CZ-12DP-2V(27)	0543-2051-1-27	DF11C-12DP-2V(57)	0543-0686-2-57	12	10.0	16.5	16.7	
DF11CZ-14DP-2V(27)	0543-2052-4-27	DF11C-14DP-2V(57)	0543-0687-5-57	14	12.0	18.5	18.7	
DF11CZ-16DP-2V(27)	0543-2053-7-27	DF11C-16DP-2V(57)	0543-0688-8-57	16	14.0	20.5	20.7	
DF11CZ-18DP-2V(27)	0543-2054-0-27	DF11C-18DP-2V(57)	0543-0689-0-57	18	16.0	22.5	22.7	
DF11CZ-20DP-2V(27)	0543-2055-2-27	DF11C-20DP-2V(57)	0543-0690-0-57	20	18.0	24.5	24.7	
DF11CZ-22DP-2V(27)	0543-2056-5-27	DF11C-22DP-2V(57)	0543-0691-2-57	22	20.0	26.5	26.7	
DF11CZ-24DP-2V(27)	0543-2057-8-27	DF11C-24DP-2V(57)	0543-0692-5-57	24	22.0	28.5	28.7	
DF11CZ-26DP-2V(27)	0543-2058-0-27	DF11C-26DP-2V(57)	0543-0693-8-57	26	24.0	30.5	30.7	
DF11CZ-28DP-2V(27)	0543-2059-3-27	DF11C-28DP-2V(57)	0543-0694-0-57	28	26.0	32.5	32.7	
DF11CZ-30DP-2V(27)	0543-2060-2-27	DF11C-30DP-2V(57)	0543-0695-3-57	30	28.0	34.5	34.7	
DF11CZ-32DP-2V(27)	0543-2061-5-27	DF11C-32DP-2V(57)	0543-0696-6-57	32	30.0	36.5	36.7	
DF11CZ-40DP-2V(27)	0543-2062-8-27	DF11C-40DP-2V(57)	0543-0697-9-57	40	38.0	44.5	44.7	Note2

Note1: Tape and reel packaging(500 pieces/reel). Order by number of reels.
Note2: The 40 contacts connector is merchandized in combination with the SMT product.
Note3: Embossed packaging products have the reel wrapped in polyethylene and include a desiccant.

■PCB mounting pattern

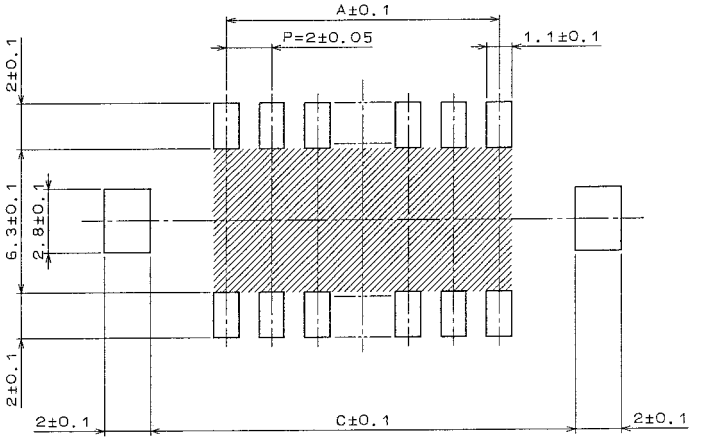

Note:If the pattern is included in the shaded area and not treated with resist, it could contact to the connector contact .

■In-line Plug

Photo: Contact insertion status

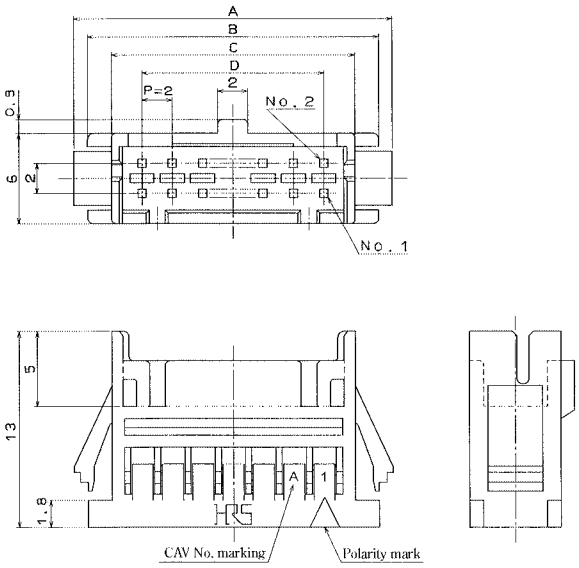

■In-line Plug Panel Cutouts

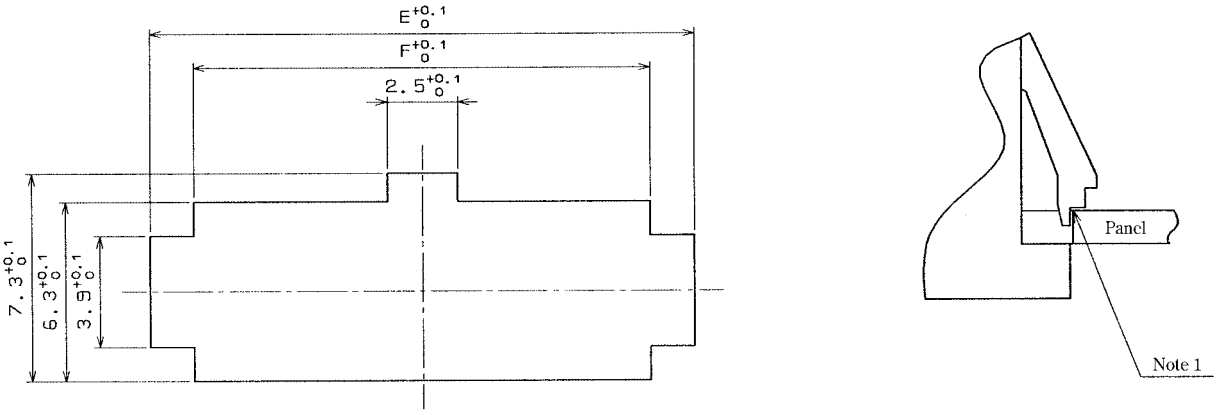

Note1: Please use the non-radius side for the panel hooking area.
Note2: Applicable panel thicknessing is 1.6 to 1.0mm (A slight deviation will occur for the thickness except for 1.6 and 1.2mm.)

Unit: mm

Part Number	CL No.	Number of Contacts	A	B	C	D	E	F
DF11- 4DEP-2C	543-0619-5	4	11.0	9.2	6.0	2.0	9.4	6.3
DF11- 6DEP-2C	543-0620-4	6	13.0	11.2	8.0	4.0	11.4	8.3
DF11- 8DEP-2C	543-0621-7	8	15.0	13.2	10.0	6.0	13.4	10.3
DF11-10DEP-2C	543-0622-0	10	17.0	15.2	12.0	8.0	15.4	12.3
DF11-12DEP-2C	543-0623-2	12	19.0	17.2	14.0	10.0	17.4	14.3
DF11-14DEP-2C	543-0624-5	14	21.0	19.2	16.0	12.0	19.4	16.3
DF11-16DEP-2C	543-0625-8	16	23.0	21.2	18.0	14.0	21.4	18.3
DF11-18DEP-2C	543-0626-0	18	25.0	23.2	20.0	16.0	23.4	20.3
DF11-20DEP-2C	543-0627-3	20	27.0	25.2	22.0	18.0	25.4	22.3
DF11-22DEP-2C	543-0628-6	22	29.0	27.2	24.0	20.0	27.4	24.3
DF11-24DEP-2C	543-0629-9	24	31.0	29.2	26.0	22.0	29.4	26.3
DF11-26DEP-2C	543-0630-8	26	33.0	31.2	28.0	24.0	31.4	28.3
DF11-28DEP-2C	543-0631-0	28	35.0	33.2	30.0	26.0	33.4	30.3
DF11-30DEP-2C	543-0632-3	30	37.0	35.2	32.0	28.0	35.4	32.3
DF11-32DEP-2C	543-0633-6	32	39.0	37.2	34.0	30.0	37.4	34.3

Note1: Delivered per bag unit (100 pcs.). Please order products per bag unit.

■In-line Adaptor

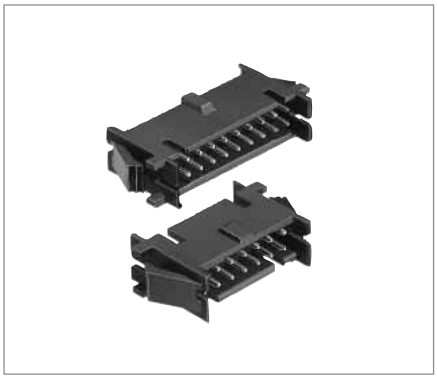

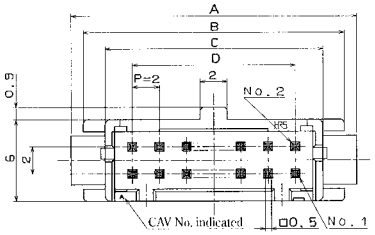

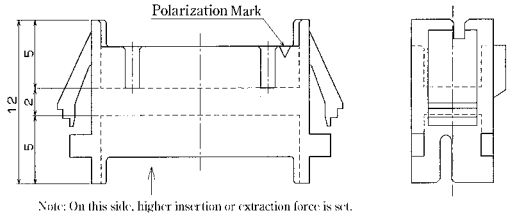

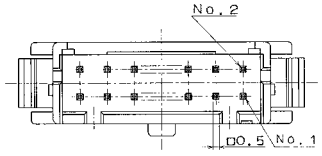

■In-line Adaptor Panel Cutouts

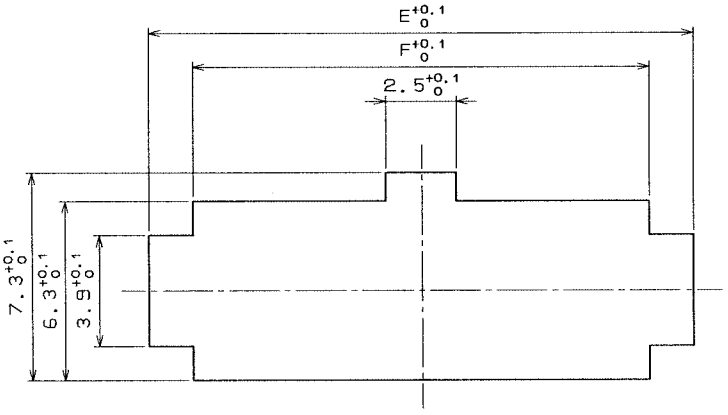

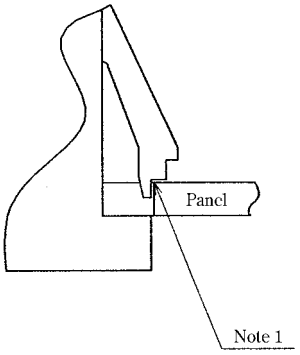

Note1: Please use the non-radius surface in the panel hooking area.
Note2: Applicable panel thickness is 1.6 to 1.0mm (A slight backlash will occur in the thickness other than 1.6 and 1.2mm.)

Unit: mm

Part Number	CL No.	Number of Contacts	A	B	C	D	E	F
DF11- 4DEP-2A	543-0698-1	4	11.0	9.2	6.0	2.0	9.4	6.3
DF11- 6DEP-2A	543-0699-4	6	13.0	11.2	8.0	4.0	11.4	8.3
DF11- 8DEP-2A	543-0700-1	8	15.0	13.2	10.0	6.0	13.4	10.3
DF11-10DEP-2A	543-0701-4	10	17.0	15.2	12.0	8.0	15.4	12.3
DF11-12DEP-2A	543-0702-7	12	19.0	17.2	14.0	10.0	17.4	14.3
DF11-14DEP-2A	543-0703-0	14	21.0	19.2	16.0	12.0	19.4	16.3
DF11-16DEP-2A	543-0704-2	16	23.0	21.2	18.0	14.0	21.4	18.3
DF11-18DEP-2A	543-0705-5	18	25.0	23.2	20.0	16.0	23.4	20.3
DF11-20DEP-2A	543-0706-8	20	27.0	25.2	22.0	18.0	25.4	22.3
DF11-22DEP-2A	543-0707-0	22	29.0	27.2	24.0	20.0	27.4	24.3
DF11-24DEP-2A	543-0708-3	24	31.0	29.2	26.0	22.0	29.4	26.3
DF11-26DEP-2A	543-0709-6	26	33.0	31.2	28.0	24.0	31.4	28.3
DF11-28DEP-2A	543-0710-5	28	35.0	33.2	30.0	26.0	33.4	30.3
DF11-30DEP-2A	543-0711-8	30	37.0	35.2	32.0	28.0	35.4	32.3
DF11-32DEP-2A	543-0712-0	32	39.0	37.2	34.0	30.0	37.4	34.3

Note1: Delivered per bag unit (100 pcs.). Please order products per bag unit.

■Crimping Contact for Socket

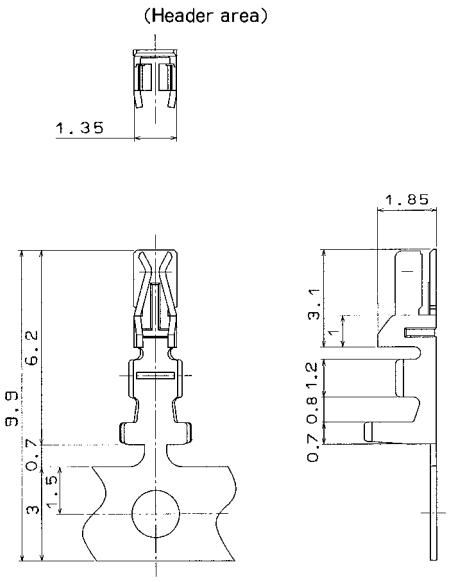

Part Number	CL No.	Type	Quantity		Finish
DF11-22SCF	543-0601-0	Reel contact	10000 pcs.	per reel	Tin plated
DF11-22SC	543-0602-2	Bulk contact	100 pcs.	per bag	
DF11-2428SCF	543-0500-2	Reel contact	10000 pcs.	per reel	
DF11-2428SC	543-0501-5	Bulk contact	100 pcs.	per bag	
DF11A-2428SCF	543-0634-9	Reel contact	10000 pcs.	per reel	
DF11A-2428SC	543-0635-1	Bulk contact	100 pcs.	per bag	
DF11-30SCF	543-0605-0	Reel contact	10000 pcs.	per reel	
DF11-30SC	543-0606-3	Bulk contact	100 pcs.	per bag	
DF11-22SCFA(04)	543-0603-5-04	Reel contact	10000 pcs.	per reel	Gold plated
DF11-22SCA	543-0604-8	Bulk contact	100 pcs.	per bag	
DF11-2428SCFA(04)	543-0550-0-04	Reel contact	10000 pcs.	per reel	
DF11-2428SCA	543-0551-3	Bulk contact	100 pcs.	per bag	
DF11-30SCFA(04)	543-0607-6-04	Reel contact	10000 pcs.	per reel	
DF11-30SCA	543-0608-9	Bulk contact	100 pcs.	per bag	

Note1: DF11A-2428SCF/SC is of tin plated low insertion/extraction type.

●Applicable Wire (Tin Plated Annealed Copper Wire)

Conductor Size (Wire Structure)	Jacket Diameter
AWG 22 (17pcs./0.16mm)	ϕ1.2 to ϕ1.45mm
AWG 24 (11pcs./0.16mm)	ϕ0.9 to ϕ1.45mm
AWG 26 (7pcs./0.16mm)	
AWG 28 (7pcs./0.127mm)	
AWG 30 (7pcs./0.1mm)	ϕ0.75 to ϕ1.2mm

●Recommended Wire

UL1061, UL1007 (Note 2.)

●Strip Length

1.7 to 2.3mm

Note1: If other wires are used than the applicable wire, consult the HRS sales department.
Note2: DF11-22SCF/SC/SCFA/SCA is for UL1061.

■Crimping Contact for In-line Plug

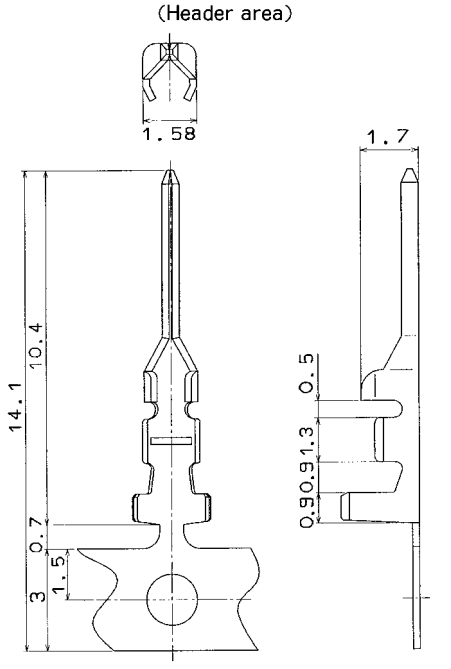

Part Number	CL No.	Type	Quantity		Finish
DF11EP2428PCF	543-0615-4	Reel contact	10000 pcs.	per reel	Tin plated
DF11EP2428PC	543-0616-7	Bulk contact	100 pcs.	per bag	
DF11EP2428PCFA	543-0617-0	Reel contact	10000 pcs.	per reel	Gold plated
DF11-EP2428PCA	543-0618-2	Bulk contact	100 pcs.	per bag	

●Applicable Wire (Tin Plated Annealed Copper Wire)

Conductor Size (Contact Wire Structure)	Jacket Diameter
AWG 24 (11pcs./0.16mm)	ϕ0.9 to ϕ1.45mm
AWG 26 (7pcs./0.16mm)	
AWG 28 (7pcs./0.127mm)	

●Recommended Wire

UL1061, UL1007

●Strip Length

1.9 to 2.3mm

Note1: If other wires are used than the applicable wire, consult the HRS sales department.

■Applicable Crimping Tool

Type	Part Number	CL No.	Applicable Contact
Applicator	AP105-DF11-22S	901-4529-7	DF11 -22SCF/SCFA(04)
	AP105-DF11-2428S	901-4511-1	DF11 -2428SCF/SCFA(04) DF11A-2428SCF
	AP105-DF11-30S	901-4532-1	DF11 -30SCF/SCFA(04)
	AP105-DF11-EP2428P	901-4528-4	DF11 -EP2428PCF/PCFA
Press Unit	CM-105	901-0005-4	――――――
Hand Crimping Tool	DF11-TA22HC	550-0228-6	DF11 -22SC/SCA
	DF11-TA2428HC	550-0197-4	DF11 -2428SC/SCA DF11A-2428SC
	DF11-TA30HC	550-0230-8	DF11 -30SC/SCA
	DF11EP-TA2428HC	550-0227-3	DF11 -EP2428PC/PCA
Extraction Tool	DF-C-PO(B)	550-0179-2	DF11 -****SCF DF11 -EP****PCF

Note: If any trouble has occurred due to tools other than the designated tool, Hirose bears no respoisibility for any trouble.

■Application Pattern

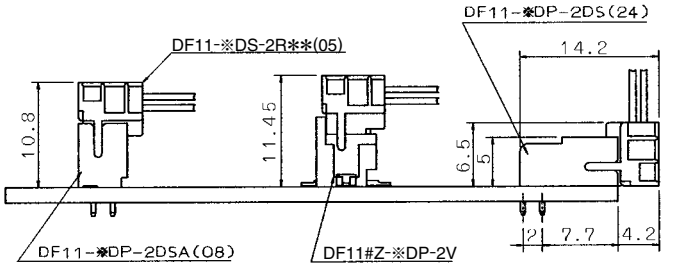

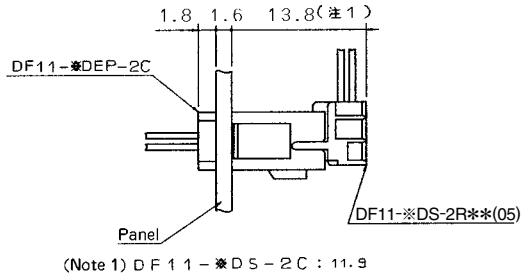

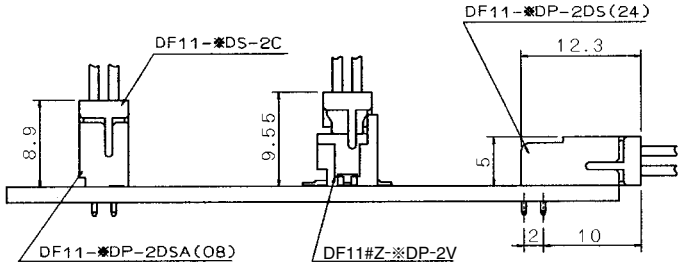

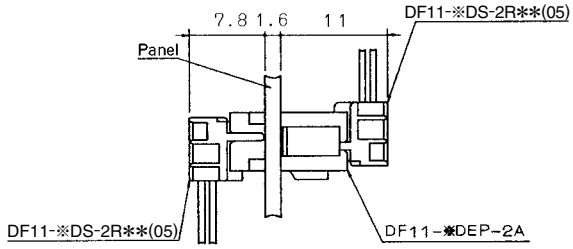

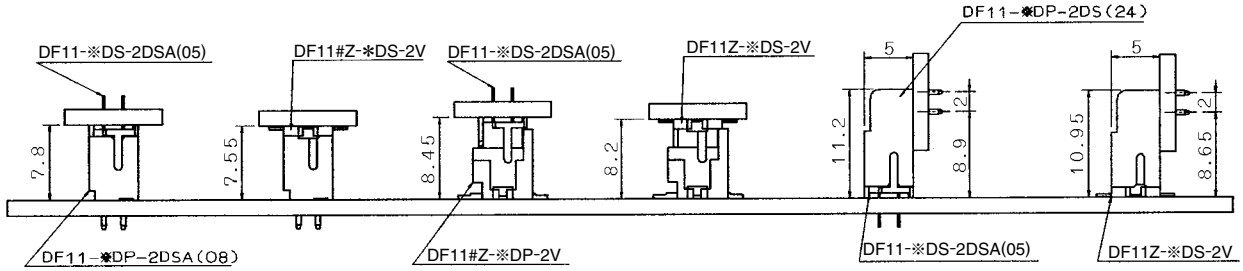

■Embossed Carrier tape Dimensions

●Header (SMT)

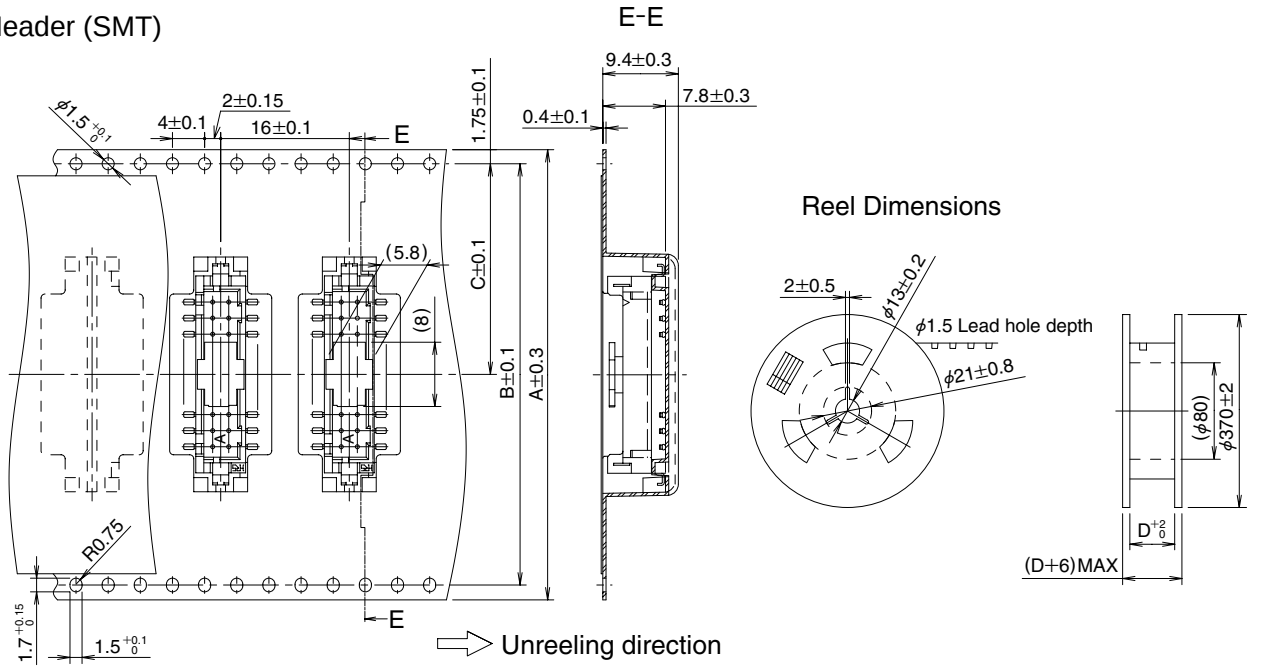

Unit: mm

Product Type / Size	Number of Contacts	A	B	C	D
DF11CZ-∗∗DP-2V(27) DF11C-∗∗DP-2V(57)	4～8	24.0	———	11.5	24.4
	10～12	32.0	28.4	14.2	32.4
	14～22	44.0	40.4	20.2	44.4
	24～32	56.0	52.4	26.2	56.4
	40	72.0	68.4	34.2	72.4

●Receptacle (SMT)

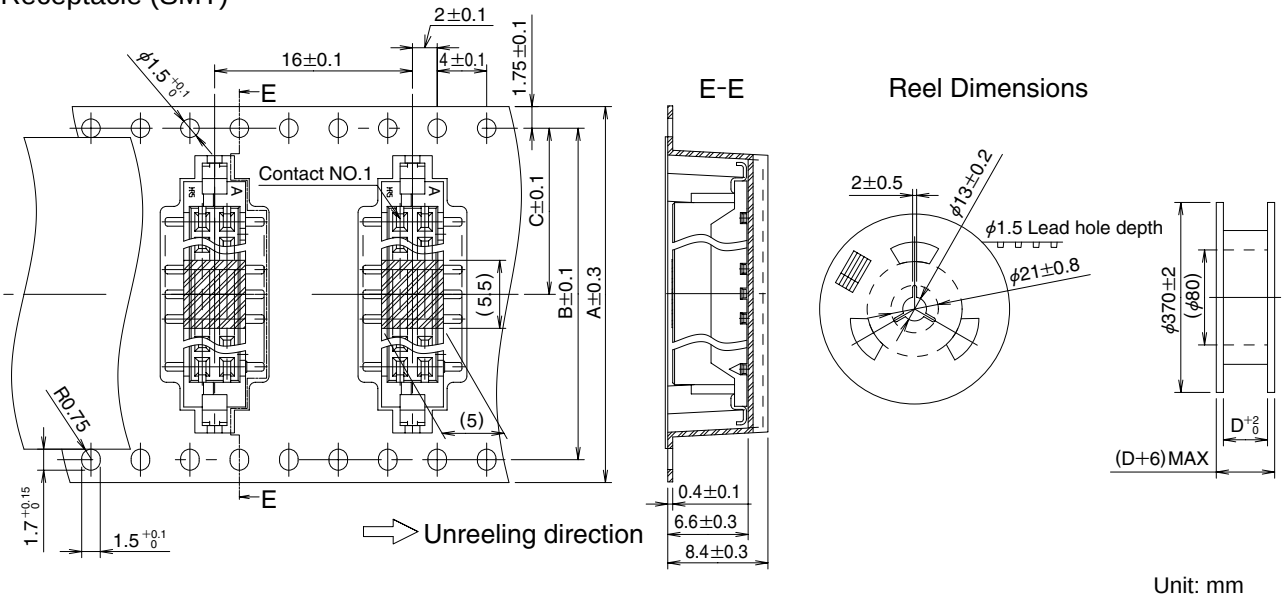

Unit: mm

Product Type / Size	Number of Contacts	A	B	C	D
DF11CZ-∗∗DS-2V	4～8	24.0	———	11.5	24.4
	10～12	32.0	28.4	14.2	32.4
	14～18	44.0	40.4	20.2	44.4
	20	56.0	52.4	26.2	56.4
	22	44.0	40.4	20.2	44.4
	24～32	56.0	52.4	26.2	56.4
	40	72.0	68.4	34.2	72.4

■Precautions

1. Recommended Temperature Profile (SMT)	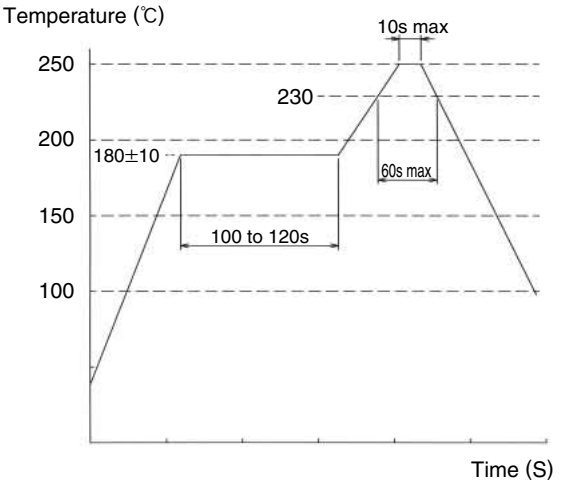 Note1: UP to 2 cycles of Reflow soldering are possible under the same conditions, provided that there is a return to normal temperature between the first and second cycle Note2: The temperature profile indicates the board surface temperature at the point of contacts with the connector terminals. Note3: This reflow profile is for the connectors packaged in embossed tape(reel), with desiccant in the package. 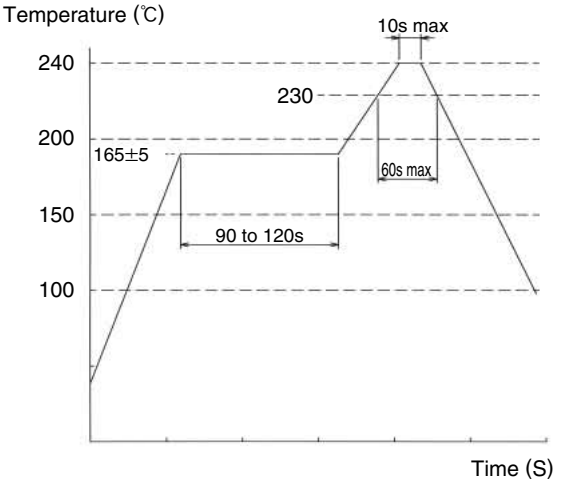 Note4: Reflow temperature for SMT connectors in another package is 240℃, 10 sec.max.
2. Recommended Manual Soldering Condition (SMT)	Soldering iron temperature: 290±10℃, Soldering time: Within 2 seconds
3. Recommended Screen Thickness (SMT)	0.15 to 0.2mm
4. Board Warp age (SMT)	Based on the both connector edges, 0.03mm max. is allowed in the connector center area.
5. Recommended Soldering Condition(Through hole)	Flow: 250℃ for 10 seconds Manual soldering: 290℃ for 2 seconds
6. Cleaning Condition	Refer to the "Nylon Connector Use Hand book".
7. Connection Condition	Refer to the "Nylon Connector Use Hand book".

Компания «ЭлектроПласт» предлагает заключение долгосрочных отношений при поставках импортных электронных компонентов на взаимовыгодных условиях!

Наши преимущества:

- Оперативные поставки широкого спектра электронных компонентов отечественного и импортного производства напрямую от производителей и с крупнейших мировых складов;
- Поставка более 17-ти миллионов наименований электронных компонентов;
- Поставка сложных, дефицитных, либо снятых с производства позиций;
- Оперативные сроки поставки под заказ (от 5 рабочих дней);
- Экспресс доставка в любую точку России;
- Техническая поддержка проекта, помощь в подборе аналогов, поставка прототипов;
- Система менеджмента качества сертифицирована по Международному стандарту ISO 9001;
- Лицензия ФСБ на осуществление работ с использованием сведений, составляющих государственную тайну;
- Поставка специализированных компонентов (Xilinx, Altera, Analog Devices, Intersil, Interpoint, Microsemi, Aeroflex, Peregrine, Syfer, Eurofarad, Texas Instrument, Miteq, Cobham, E2V, MA-COM, Hittite, Mini-Circuits,General Dynamics и др.);

Помимо этого, одним из направлений компании «ЭлектроПласт» является направление «Источники питания». Мы предлагаем Вам помощь Конструкторского отдела:

- Подбор оптимального решения, техническое обоснование при выборе компонента;
- Подбор аналогов;
- Консультации по применению компонента;
- Поставка образцов и прототипов;
- Техническая поддержка проекта;
- Защита от снятия компонента с производства.

Как с нами связаться

Телефон: 8 (812) 309 58 32 (многоканальный)
Факс: 8 (812) 320-02-42
Электронная почта: org@eplast1.ru
Адрес: 198099, г. Санкт-Петербург, ул. Калинина, дом 2, корпус 4, литера А.