DM3730, DM3725
Digital Media Processors

Check for Samples: DM3730, DM3725

1 DM3730, DM3725 Digital Media Processors

1.1 Features

- DM3730/25 Digital Media Processors:
  - Compatible with OMAP™ 3 Architecture
  - ARM® Microprocessor (MPU) Subsystem
    - Up to 1-GHz ARM® Cortex™-A8 Core Also supports 300, 600, and 800-MHz operation
    - NEON™ SIMD Coprocessor
  - High Performance Image, Video, Audio (IVA2.2™) Accelerator Subsystem
    - Up to 800-MHz TMS320C64x+™ DSP Core Also supports 260, 520, and 660-MHz operation
    - Enhanced Direct Memory Access (EDMA) Controller (128 Independent Channels)
    - Video Hardware Accelerators
  - POWERVR SGX™ Graphics Accelerator (DM3730 only)
    - Tile Based Architecture Delivering up to 20 MPoly/sec
    - Universal Scalable Shader Engine: Multi-threaded Engine Incorporating Pixel and Vertex Shader Functionality
    - Industry Standard API Support: OpenGLES 1.1 and 2.0, OpenVG1.0
    - Fine Grained Task Switching, Load Balancing, and Power Management
    - Programmable High Quality Image Anti-Aliasing
  - Advanced Very-Long-Instruction-Word (VLIW) TMS320C64x+™ DSP Core
    - Eight Highly Independent Functional Units
    - Six ALUs (32-/40-Bit); Each Supports Single 32- bit, Dual 16-bit, or Quad 8-bit, Arithmetic per Clock Cycle
    - Two Multipliers Support Four 16 x 16-Bit Multiplies (32-Bit Results) per Clock Cycle or Eight 8 x 8-Bit Multiplies (16-Bit Results) per Clock Cycle
    - Load-Store Architecture With Non-Aligned Support
    - 64 32-Bit General-Purpose Registers
    - Instruction Packing Reduces Code Size
    - All Instructions Conditional
    - Additional C64x+™ Enhancements
      - Protected Mode Operation
      - Expectations Support for Error Detection and Program Redirection
      - Hardware Support for Modulo Loop Operation
  - C64x+™ L1/L2 Memory Architecture
    - 32K-Byte L1P Program RAM/Cache (Direct Mapped)
    - 80K-Byte L1D Data RAM/Cache (2-Way Set- Associative)
    - 64K-Byte L2 Unified Mapped RAM/Cache (4- Way Set-Associative)
    - 32K-Byte L2 Shared SRAM and 16K-Byte L2 ROM
  - C64x+™ Instruction Set Features
    - Byte-Addressable (8-/16-/32-/64-Bit Data)
    - 8-Bit Overflow Protection
    - Bit-Field Extract, Set, Clear
    - Normalization, Saturation, Bit-Counting
    - Compact 16-Bit Instructions
    - Additional Instructions to Support Complex Multiplies
  - External Memory Interfaces:
    - SDRAM Controller (SDRC)
      - 16, 32-bit Memory Controller With 1G-Byte Total Address Space
      - Interfaces to Low-Power SDRAM
      - SDRAM Memory Scheduler (SMS) and Rotation Engine
    - General Purpose Memory Controller (GPMC)
      - 16-bit Wide Multiplexed Address/Data

Please be aware that an important notice concerning availability, standard warranty, and use in critical applications of Texas Instruments semiconductor products and disclaimers thereto appears at the end of this data sheet.

POWERVR SGX is a trademark of Imagination Technologies Ltd.
OMAP is a trademark of Texas Instruments.
Cortex, NEON are trademarks of ARM Limited.
ARM is a registered trademark of ARM Ltd.
All other trademarks are the property of their respective owners.

PRODUCTION DATA information is current as of publication date. Products conform to specifications per the terms of the Texas Instruments standard warranty. Production processing does not necessarily include testing of all parameters.

Copyright © 2010–2011, Texas Instruments Incorporated

Bus
  - Up to 8 Chip Select Pins With 128M-Byte Address Space per Chip Select Pin
  - Glueless Interface to NOR Flash, NAND Flash (With ECC Hamming Code Calculation), SRAM and Pseudo-SRAM
  - Flexible Asynchronous Protocol Control for Interface to Custom Logic (FPGA, CPLD, ASICs, etc.)
  - Nonmultiplexed Address/Data Mode (Limited 2K-Byte Address Space)
- 1.8-V I/O and 3.0-V (MMC1 only), 0.9-V to 1.2-V Adaptive Processor Core Voltage
  0.9-V to 1.1-V Adaptive Core Logic Voltage
  Note: These are default Operating Performance Point (OPP) voltages and could be optimized to lower values using SmartReflex AVS.
- Commercial, Industrial, and Extended Temperature Grades
- Serial Communication
  - 5 Multichannel Buffered Serial Ports (McBSPs)
    - 512 Byte Transmit/Receive Buffer (McBSP1/3/4/5)
    - 5K-Byte Transmit/Receive Buffer (McBSP2)
    - SIDETONE Core Support (McBSP2 and 3 Only) For Filter, Gain, and Mix Operations
    - Direct Interface to I2S and PCM Device and T Buses
    - 128 Channel Transmit/Receive Mode
  - Four Master/Slave Multichannel Serial Port Interface (McSPI) Ports
  - High-Speed/Full-Speed/Low-Speed USB OTG Subsystem (12-/8-Pin ULPI Interface)
  - High-Speed/Full-Speed/Low-Speed Multiport USB Host Subsystem
    - 12-/8-Pin ULPI Interface or 6-/4-/3-Pin Serial Interface
  - One HDQ/1-Wire Interface
  - Four UARTs (One with Infrared Data Association [IrDA] and Consumer Infrared [CIR] Modes)
  - Three Master/Slave High-Speed Inter-Integrated Circuit (I2C) Controllers
- Camera Image Signal Processing (ISP)
  - CCD and CMOS Imager Interface
  - Memory Data Input
  - BT.601/BT.656 Digital YCbCr 4:2:2 (8-/10-Bit) Interface
  - Glueless Interface to Common Video Decoders
  - Resize Engine
    - Resize Images From 1/4x to 4x
    - Separate Horizontal/Vertical Control
- System Direct Memory Access (SDMA) Controller (32 Logical Channels With Configurable Priority)
- Comprehensive Power, Reset, and Clock Management
  - SmartReflex™ Technology
  - Dynamic Voltage and Frequency Scaling (DVFS)
- ARM® Cortex™-A8 Core
  - ARMv7 Architecture
    - TrustZone®
    - Thumb®-2
    - MMU Enhancements
  - In-Order, Dual-Issue, Superscalar Microprocessor Core
  - NEON Multimedia Architecture
  - Over 2x Performance of ARMv6 SIMD
  - Supports Both Integer and Floating Point SIMD
  - Jazelle® RCT Execution Environment Architecture
  - Dynamic Branch Prediction with Branch Target Address Cache, Global History Buffer, and 8-Entry Return Stack
  - Embedded Trace Macrocell (ETM) Support for Non-Invasive Debug
- ARM Cortex-A8 Memory Architecture:
  - 32K-Byte Instruction Cache (4-Way Set-Associative)
  - 32K-Byte Data Cache (4-Way Set-Associative)
  - 256K-Byte L2 Cache
- 32K-Byte ROM
- 64K-Byte Shared SRAM
- Endianess:
  - ARM Instructions - Little Endian
  - ARM Data – Configurable
  - DSP Instructions/Data - Little Endian

- Removable Media Interfaces:
  - Three Multimedia Card (MMC)/ Secure Digital (SD) With Secure Data I/O (SDIO)
- Test Interfaces
  - IEEE-1149.1 (JTAG) Boundary-Scan Compatible
  - Embedded Trace Macro Interface (ETM)
  - Serial Data Transport Interface (SDTI)
- 12 32-bit General Purpose Timers
- 2 32-bit Watchdog Timers

Copyright © 2010–2011, Texas Instruments Incorporated

- **1 32-bit Secure Watchdog Timer**
- **1 32-bit 32-kHz Sync Timer**
- **Up to 188 General-Purpose I/O (GPIO) Pins (Multiplexed With Other Device Functions)**
- **45-nm CMOS Technology**
- **Package-On-Package (POP) Implementation for Memory Stacking (Not Available in CUS Package)**
- **Packages:**
  - **515-pin s-PBGA package (CBP Suffix), .5mm Ball Pitch (Top), .4mm Ball Pitch (Bottom)**
  - **515-pin s-PBGA package (CBC Suffix), .65mm Ball Pitch (Top), .5mm Ball Pitch (Bottom)**
  - **423-pin s-PBGA package (CUS Suffix), .65mm Ball Pitch**

Copyright © 2010–2011, Texas Instruments Incorporated

1.2 Description

The DM37x generation of high-performance, digital media processors are based on the enhanced device architecture and are integrated on TI's advanced 45-nm process technology. This architecture is designed to provide best in class ARM and Graphics performance while delivering low power consumption. This balance of performance and power allow the device to support the following example applications:

- Portable Data Terminals
- Navigation
- Auto Infotainment
- Gaming
- Medical Imaging
- Home Automation
- Human Interface
- Industrial Control
- Test and Measurement
- Single board Computers

The device can support numerous HLOS and RTOS solutions including Linux and Windows Embedded CE which are available directly from TI. Additionally, the device is fully backward compatible with previous Cortex™-A8 processors and OMAP™ processors.

This DM3730/25 Digital Media Processor data manual presents the electrical and mechanical specifications for the DM3730/25 Digital Media Processor. The information contained in this data manual applies to the commercial, industrial, and extended temperature versions of the DM3730/25 Digital Media Processor unless otherwise indicated. It consists of the following sections:

- A description of the DM3730/25 terminals: assignment, electrical characteristics, multiplexing, and functional description
- A presentation of the electrical characteristics requirements: power domains, operating conditions, power consumption, and dc characteristics
- The clock specifications: input and output clocks, DPLL and DLL
- A description of thermal characteristics, device nomenclature, and mechanical data about the available packaging

 Copyright © 2010–2011, Texas Instruments Incorporated

1.3 Functional Block Diagram

The functional block diagram of the DM3730/25 Digital Media Processor is shown below.

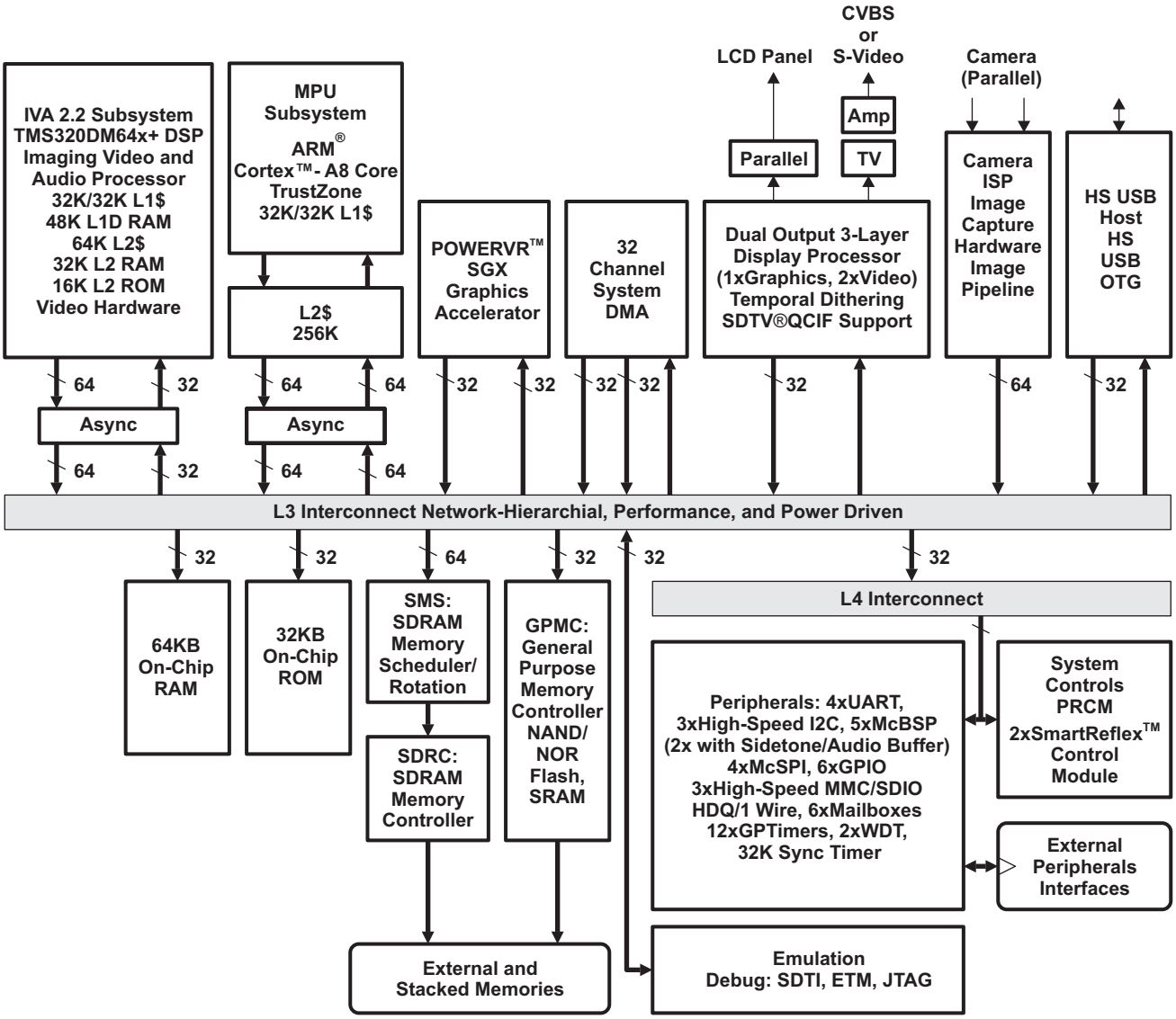

Figure 1-1. DM3730/25 Functional Block Diagram

Revision History

NOTE: Page numbers for previous revisions may differ from page numbers in the current version.

This data sheet revision history highlights the technical changes made from the previous to the current revision.

Revision History

SECTION	ADDITIONS/CHANGES/DELETIONS
Terminal Description	Changed: • Table 2-1. Ball Characteristics (CBP Pkg.). Removed restriction note from GPIO_16. • Table 2-2. Ball Characteristics (CBC Pkg.). Removed restriction note from GPIO_16. • Table 2-3. Ball Characteristics (CUS Pkg.). Removed restriction note from GPIO_16.
Electrical Characteristics	Changed: • Table 3-1. Absolute Maximum Rating over Junction Temperature Range. Added JTAG to VESD. • Table 3-5. DC Electrical Characteristics. Removed USIM ball R27.
Clock Specifications	Added note on rise and fall times for these tables: • Input Clock Requirements • sys_xtalin Squarer Input Clock Timing Requirements - Bypass Mode • sys_32k Input Clock Timing Requirements • sys_altclk Input Clock Timing Requirements • sys_clkout1 Output Clock Switching Characteristics • sys_clkout2 Output Clock Switching Characteristics Added: • Table 4-2, Crystal Electrical Characteristics. Added entry for DL - Crystal drive level

 Copyright © 2010–2011, Texas Instruments Incorporated

2 TERMINAL DESCRIPTION

2.1 Terminal Assignment

Figure 2-1 through Figure 2-5 show the ball locations for the 515- and 423- ball plastic ball grid array (s-PBGA) packages. Table 2-1 through Table 2-25 indicate the signal names and ball grid numbers for both packages.

Note: There are no balls present on the top of the 423-ball s-PBGA package.

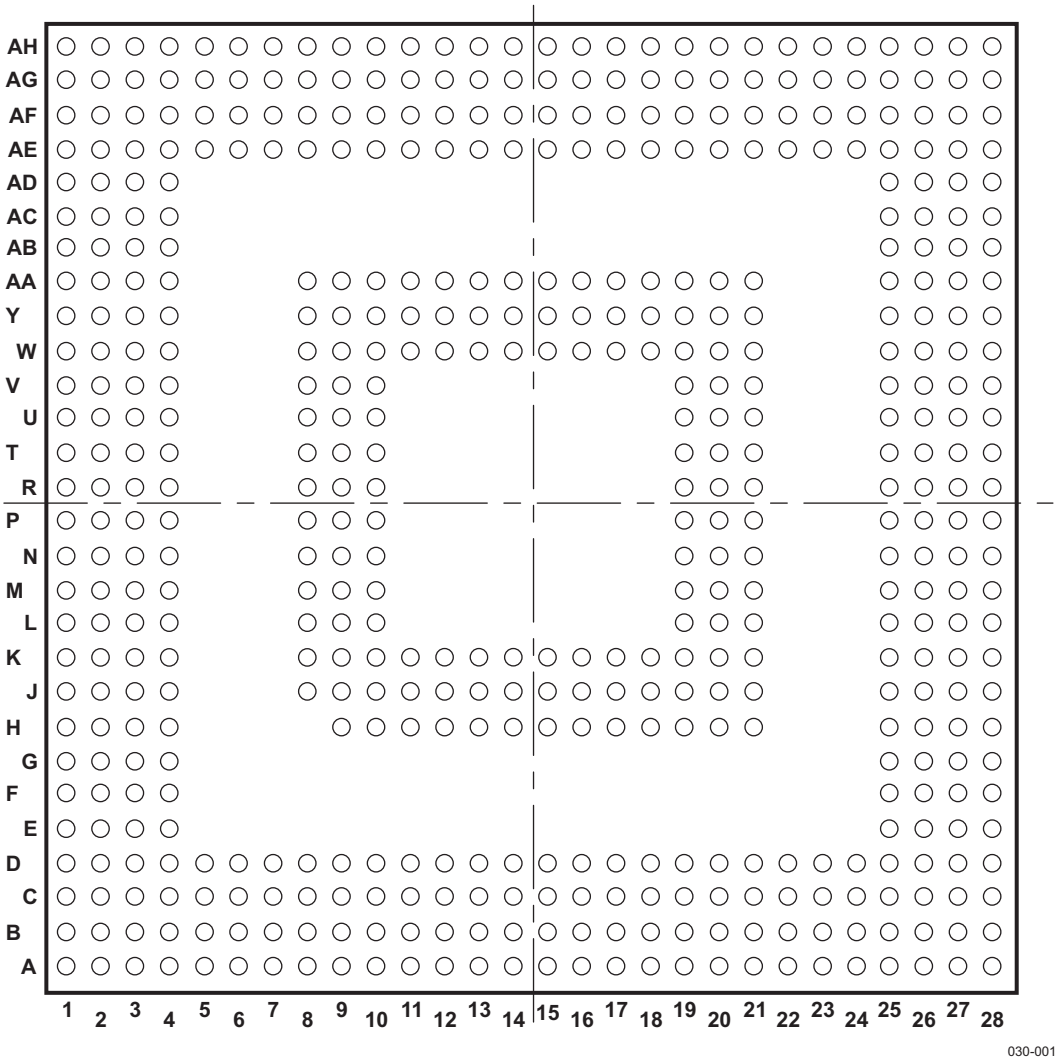

Figure 2-1. DM3730/25 Digital Media Processor CBP s-PBGA-N515 Package (Bottom View)

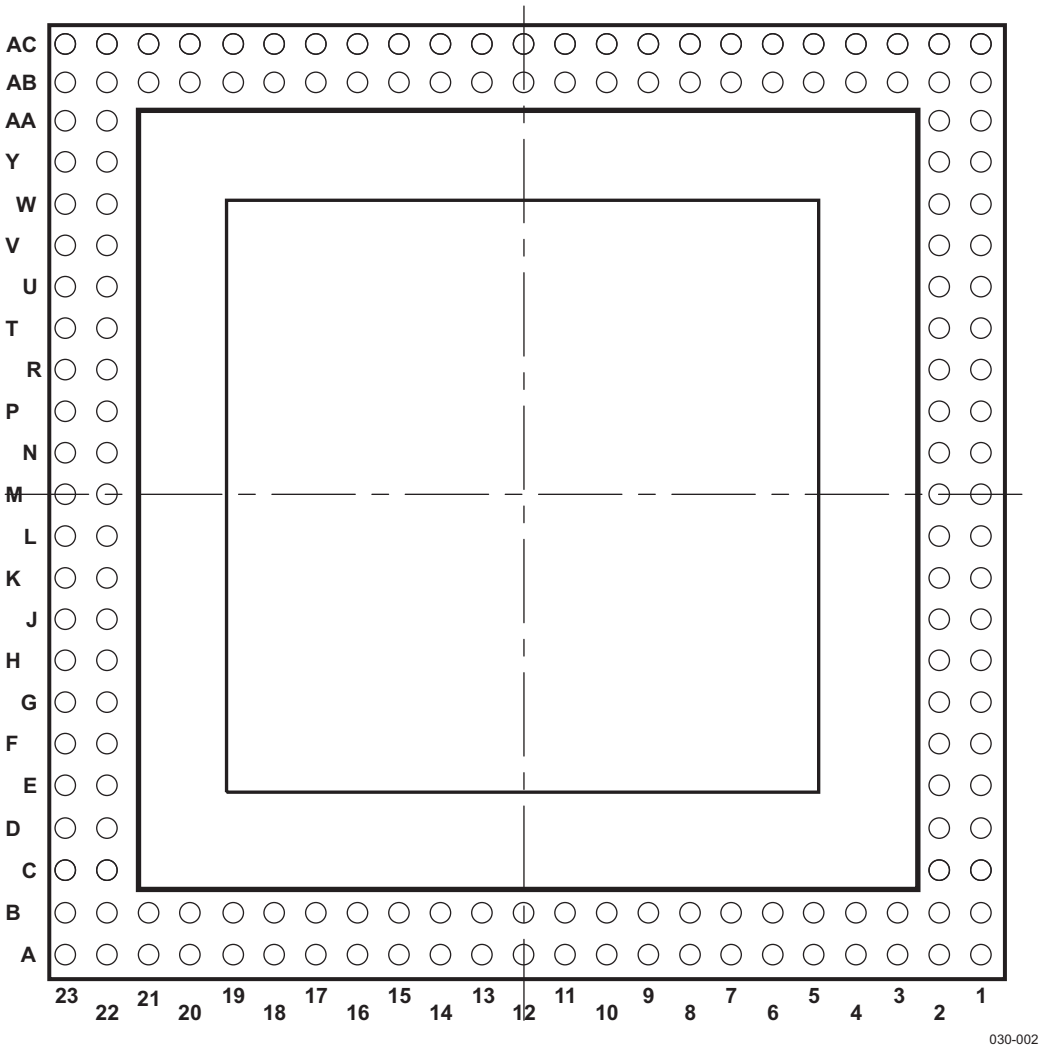

Figure 2-2. DM3730/25 Digital Media Processor CBP s-PBGA-N515 Package (Top View)

Copyright © 2010–2011, Texas Instruments Incorporated

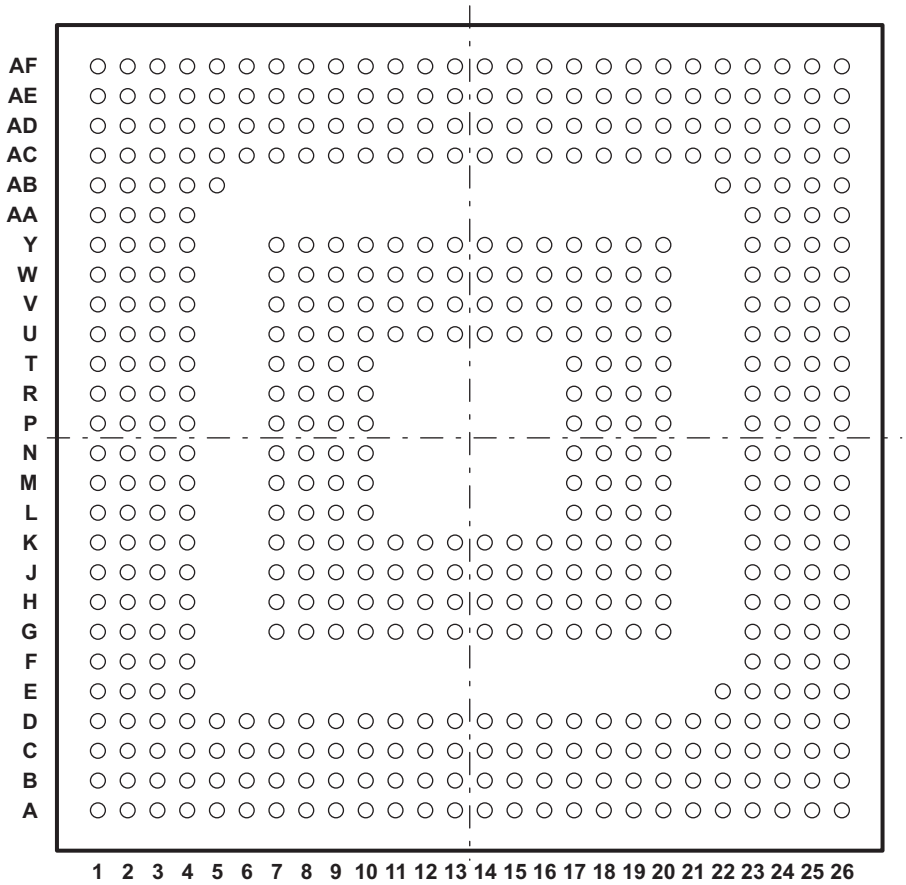

Figure 2-3. DM3730/25 Digital Media Processor CBC s-PBGA-515 Package (Bottom View)

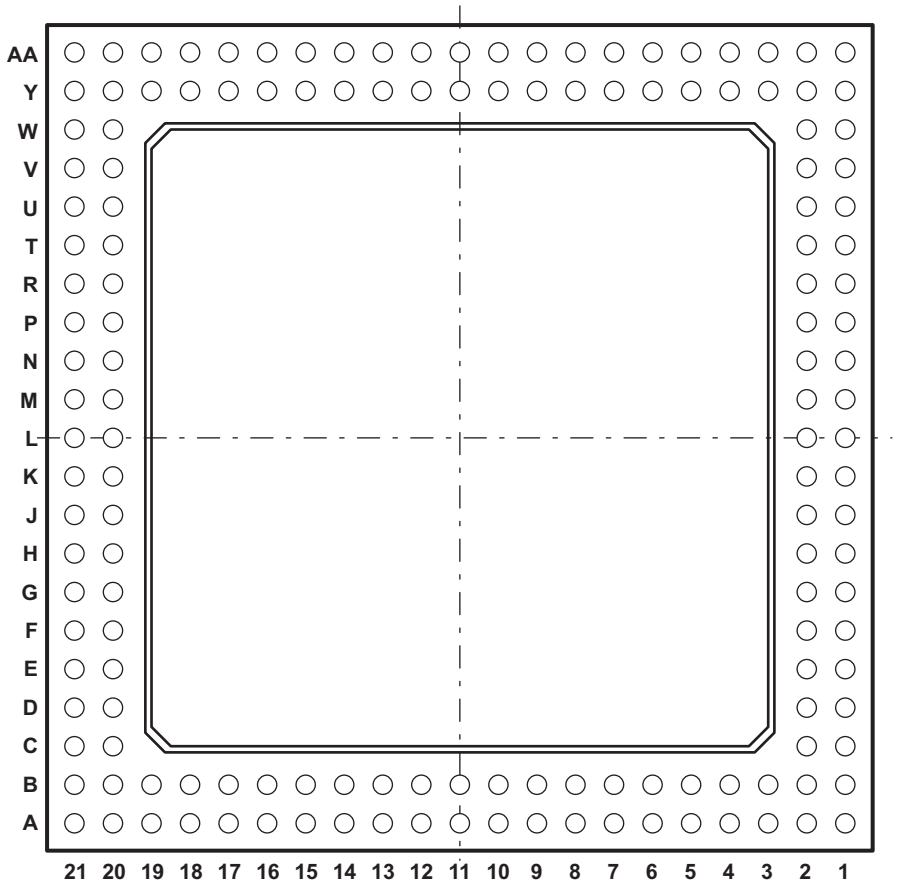

Figure 2-4. DM3730/25 Digital Media Processor CBC s-PBGA-515 Package (Top View)

Copyright © 2010–2011, Texas Instruments Incorporated

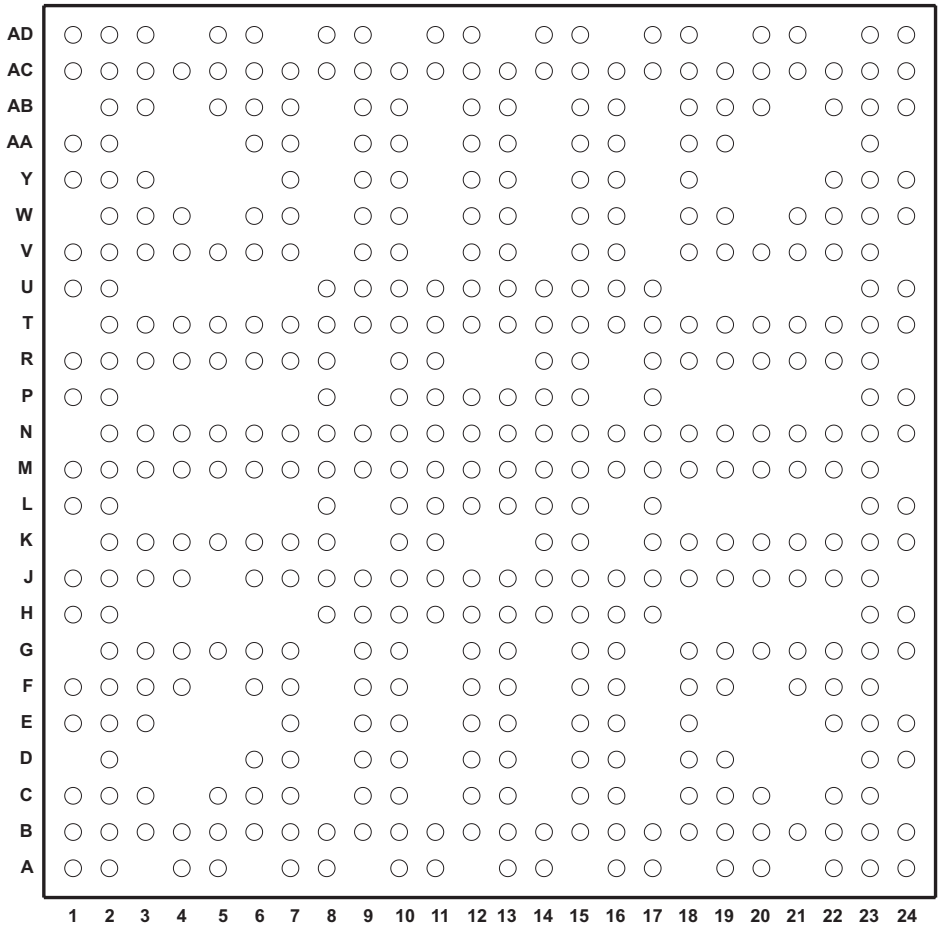

Figure 2-5. DM3730/25 Digital Media Processor CUS s-PBGA-N423 Package (Bottom View)

2.2 Pin Assignments

2.2.1 Pin Map (Top View)

The following pin maps show the top views of the 515-pin sPBGA package **[CBP]**, the 515-pin sPBGA package **[CBC]**, and the 423-pin sPBGA package **[CUS]** pin assignments in four quadrants (A, B, C, and D).

Note: A pin with an "NC" designator indicates No Connection. For proper device operation, these pins must be left unconnected.

	1	2	3	4	5	6	7	8	9	10	11	12	13	14
A	NC	NC	vss	NC	vdds_mem	NC	NC	vdds_mem	NC	NC	NC	vdds_mem	NC	NC
B	NC	vss	NC	NC	vdds_mem	NC	NC	vdds_mem	NC	NC	NC	vdds_mem	NC	NC
C	NC	NC	NC	NC	NC	NC	vss	NC	NC	vss	NC	NC	vss	NC
D	NC	NC	NC	NC	NC	NC	vss	vdd_core	vdd_core	vss	NC	NC	vss	NC
E	NC	NC	vss	vss										
F	vdds_mem	vdds_mem	gpmc_nadv_ale	gpmc_nwe										
G	NC	gpmc_noe	gpmc_nbe0_cle	gpmc_ncs0										
H	gpmc_nwp	gpmc_d8	gpmc_ncs1	vdd_core					NC	NC	NC	NC	NC	NC
J	vdds_mem	vdds_mem	vss	vdd_core				gpmc_wait3	vdd_mpu_iva	vdd_mpu_iva	vdd_mpu_iva	vss	vss	vdd_mpu_iva
K	gpmc_d0	gpmc_d9	gpmc_a10	gpmc_a4				gpmc_wait2	vss	vss	vdd_mpu_iva	vss	vdd_mpu_iva	vdd_mpu_iva
L	gpmc_d1	gpmc_d2	gpmc_a9	gpmc_a3				gpmc_wait1	vdd_mpu_iva	vdd_mpu_iva				
M	pop_y23_m1	pop_k2_m2	gpmc_a8	gpmc_a2				gpmc_wait0	vdd_mpu_iva	vdd_mpu_iva				
N	pop_u1_n1	pop_l2_n2	gpmc_a7	gpmc_a1				gpmc_ncs7	vss	vdd_mpu_iva				
P	gpmc_d10	gpmc_d3	vss	vss				gpmc_ncs6	vss	vss				

A. Top Views are provided to assist in hardware debugging efforts.

Figure 2-6. CBP Pin Map [Quadrant A - Top View]

Copyright © 2010–2011, Texas Instruments Incorporated

15	16	17	18	19	20	21	22	23	24	25	26	27	28	
pop_a12 _a15	NC	NC	vdds_mem	NC	NC	NC	vdds_mem	cam_vs	cam_hs	cam_d5	vss	pop_a22 _a27	pop_a23 _a28	A
pop_b12 _b15	NC	NC	vdds_mem	NC	NC	NC	vdds_mem	cam_wen	cam_d2	cam_d10	cam_xclkb	vss	pop_b23 _b28	B
NC	vdds_mem	NC	NC	vss	NC	NC	vss	cam_fld	cam_d3	cam_xclka	cam_d11	cam_pclk	vdds_mem	C
vdd_core	vdds_mem	NC	NC	vss	NC	vss	vdd_core	vdd_core	cam_d4	cam_strobe	dss_hsync	dss_vsync	dss_pclk	D
										vdd_core	dss_data6	dss_acbias	dss_data20	E
										vdds	vdds	dss_data8	dss_data7	F
										dss_data16	dss_data9	vss	vdds_mem	G
NC	NC	NC	uart3_cts _rctx	uart3_rts _sd	uart3_rx _irrx	uart3_tx _irtx				dss_data19	dss_data18	dss_data17	vdds	H
vdd_mpu _iva	vss	vss	vdd_core	vdd_core	vdd_core	i2c1_sda				hdq_sio	dss_data21	pop_h22 _j27	pop_k1 _j28	J
vdda_dplls _dll	vss	vss	vdd_core	vss	vdd_core	i2c1_scl				vdds_ mmc1	mcbsp1_fsx	cam_d8	cam_d6	K
				vss	vss	cap_vdd _sram_core				vdd_core	vss	cam_d9	cam_d7	L
				vdd_core	vss	mcbsp2_dx				vdd_core	pop_k22 _m26	mmc1 _cmd	vss	M
				vdd_core	vdd_core	mcbsp2 _clkx				mmc1 _dat2	mmc1 _dat1	mmc1 _dat0	mmc1 _clk	N
				vss	vdd_core	mcbsp2_fsx				vdds_x	gpio_127	gpio_126	mmc1 _dat3	P

Figure 2-7. CBP Pin Map [Quadrant B - Top View]

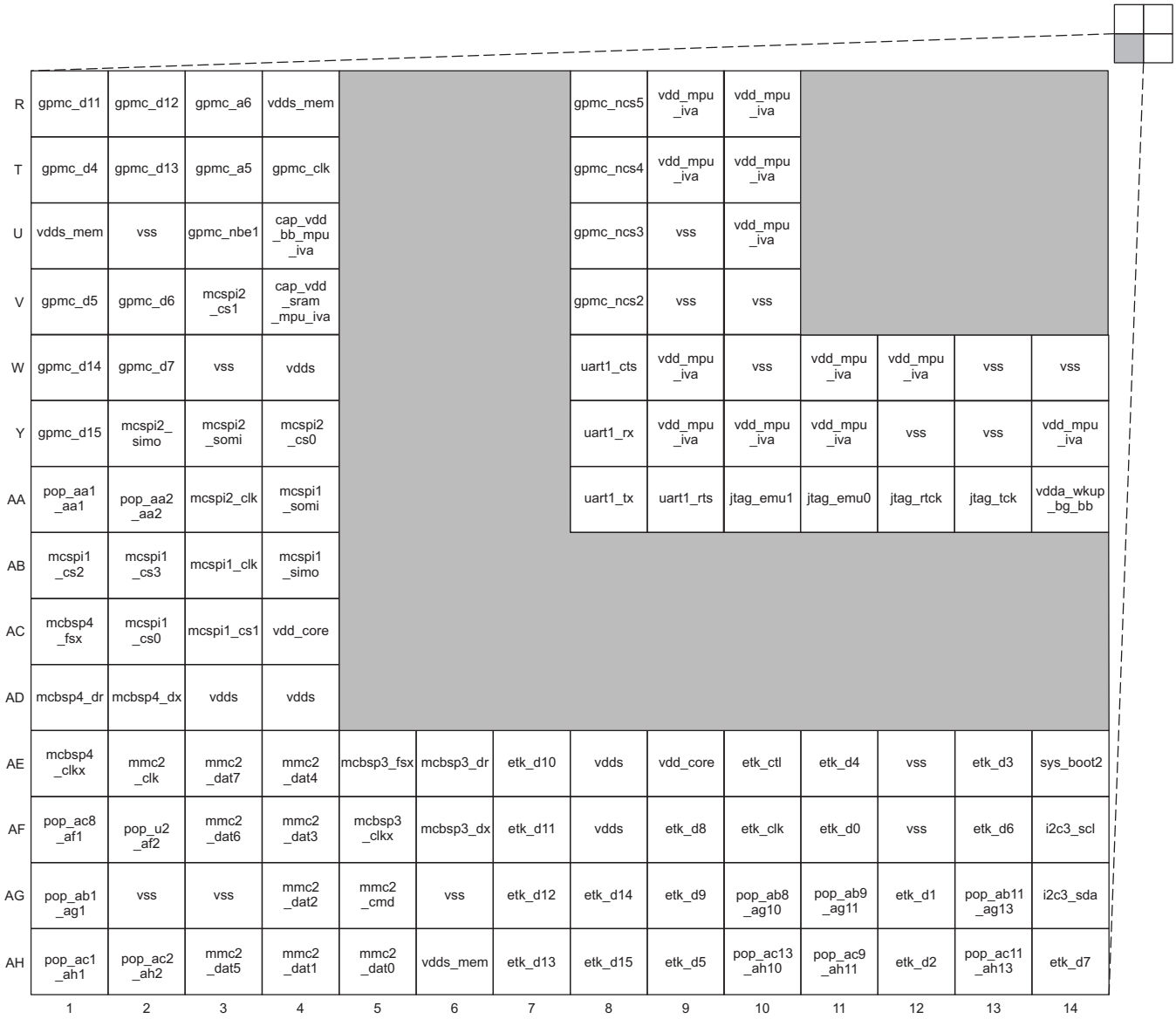

Figure 2-8. CBP Pin Map [Quadrant C - Top View]

Copyright © 2010–2011, Texas Instruments Incorporated

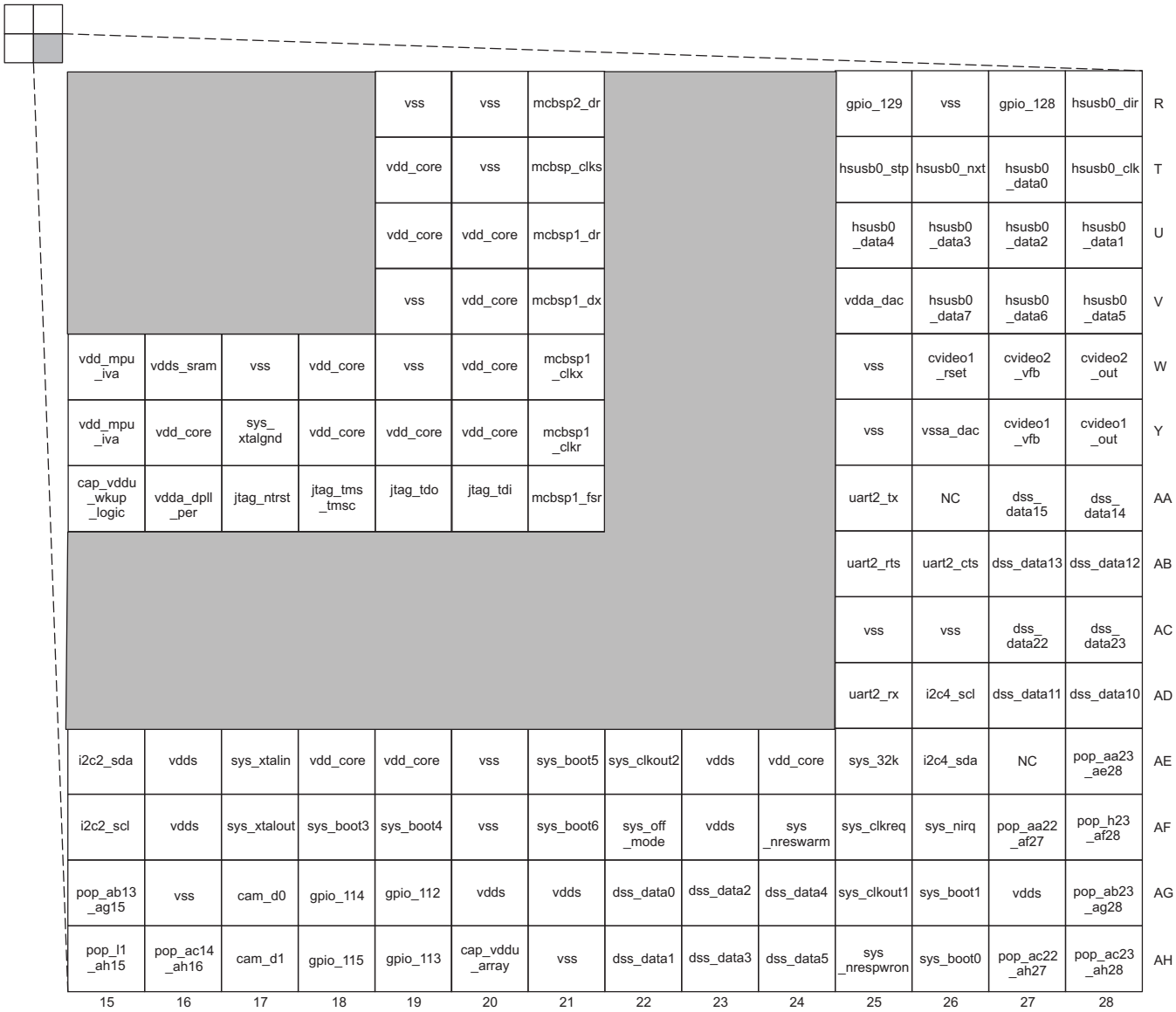

Figure 2-9. CBP Pin Map [Quadrant D - Top View]

	1	2	3	4	5	6	7	8	9	10	11	12	13
A	pop_a1 _a1	NC	gpmc_ ncs2	gpmc _a11	NC	vss	NC	vss	NC	NC	NC	NC	vss
B	NC	vss	gpmc_ wait2	gpmc_ ncs4	gpmc_ ncs6	gpmc_ ncs3	NC	NC	NC	NC	NC	NC	NC
C	I2C2_SDA	i2c2_scl	sys_ boot2	gpmc_ ncs5	gpmc_ ncs7	gpmc_ wait3	NC	NC	NC	NC	vdds	vss	NC
D	gpmc _a9	gpmc _a10	sys_ boot1	sys_ boot6	NC	cap_ vdd_bb _mpu_iva	vss	NC	vdds	vss	NC	vss	vdd_mpu _iva
E	gpmc _a7	gpmc _a8	sys_ boot3	sys_ boot4									
F	gpmc _a5	gpmc _a6	sys_ boot0	NC									
G	vss	gpmc _a4	sys_ boot5	vdds			NC	vss	vdd_mpu _iva	vss	vdd_ core	vdd_mpu _iva	NC
H	gpmc _a2	gpmc _a3	uart1 _rx	vss			vdd_mpu _iva	NC	NC	NC	NC	NC	NC
J	gpmc _nbe1	gpmc _a1	NC	NC			NC	NC	NC	NC	NC	NC	NC
K	vss	gpmc _nbe0 _cle	mmc2 _dat7	NC			NC	NC	NC	NC	vdd_mpu _iva	NC	vdda_ dplls_ dll
L	pop_j1 _l1	gpmc _d14	mmc2 _dat6	uart1 _tx			vdds	NC	vdd_mpu _iva	vss			
M	gpmc _nwe	gpmc _d15	mmc2 _dat5	vdds			vdd_ core	NC	vdd_mpu _iva	vdd_mpu _iva			
N	gpmc _clk	gpmc _noe	mcbsp3 _dr	vss			vdd_mpu _iva	vdd_mpu _iva	cap_vdd _sram _mpu_iva	vss			

A. Top Views are provided to assist in hardware debugging efforts.

Figure 2-10. CBC Pin Map [Quadrant A - Top View]

Copyright © 2010–2011, Texas Instruments Incorporated

14	15	16	17	18	19	20	21	22	23	24	25	26	
NC	NC	NC	NC	vdds	NC	pop_b16_a20	NC	NC	cam_wen	cam_d2	pop_a20_a25	pop_a21_a26	A
NC	NC	NC	NC	NC	NC	NC	NC	NC	cam_fld	cam_d3	vss	pop_b21_b26	B
NC	NC	NC	NC	NC	NC	NC	NC	NC	cam_hs	cam_d5	cam_xclka	cam_pclk	C
vss	vdd_core	NC	NC	vss	NC	vss	NC	NC	cam_vs	cam_d4	cam_d10	cam_strobe	D
								vss	NC	vdds	cam_xclkb	cam_d11	E
									uart3_cts_rctx	uart3_rts_sd	dss_data20	dss_acbias	F
NC	NC	NC	NC	vdd_core	NC	vss			vss	uart3_tx_irtx	dss_pclk	dss_data6	G
NC	NC	NC	NC	NC	NC	vdd_core			NC	uart3_rx_irrx	dss_data7	dss_data8	H
NC	vdds	NC	NC	vdds	NC	NC			hdq_sio	i2c1_sda	i2c1_scl	dss_data9	J
cap_vddu_wkup_logic	vss	NC	NC	mmc1_dat2	NC	cap_vdd_sram_core			NC	dss_hsync	vss	pop_h21_k26	K
			vss	mmc1_cmd	vss	vdds			vss	vdds	dss_data16	dss_data17	L
			vdd_core	mmc1_dat1	mmc1_dat0	gpio_126			NC	dss_data18	dss_vsync	dss_data19	M
			vss	NC	mmc1_clk	mmc1_dat3			vdds_mmc1	dss_data21	cam_d8	cam_d9	N

Figure 2-11. CBC Pin Map [Quadrant B - Top View]

	1	2	3	4	5	6	7	8	9	10	11	12	13
P	gpmc _d13	NC	mcbsp3 _dx	NC			mcspi1 _somi	mcspi1 _simo	mcspi1 _clk	vdd_mpu _iva			
R	vss	uart1 _rts	mcbsp4 _dx	vss			mcspi1 _cs0	mcspi1 _cs1	mcspi1 _cs2	mmc2 _cmd			
T	gpmc _d10	pop_n2 _t2	mcbsp4 _fsx	vdds			vdd_ core	mcspi1 _cs3	mmc2 _dat1	mmc2 _dat0			
U	gpmc _d12	gpmc _d11	mcbsp3 _clkx	mcbsp4 _dr			vdd_mpu _iva	mcspi2 _somi	mmc2 _dat3	mmc2 _dat2	vdd_mpu _iva	vdds_ sram	vdd_mpu _iva
V	gpmc _d8	etk_d9	mcbsp4 _clkx	NC			vdd_mpu _iva	mcspi2 _cs0	mcspi2 _cs1	mmc2 _dat4	vdd_mpu _iva	sys_off _mode	sys_ nresp wron
W	vss	uart1 _cts	mcbsp3 _fsx	vss			mcspi2 _clk	mcspi2 _simo	vdd_mpu _iva	mmc2 _clk	sys_ clkout2	NC	jtag_ rtck
Y	gpmc _d9	pop_t2 _y2	etk_d4	vdds			vss	vdd_ core	vdd_mpu _iva	vss	vdd_mpu _iva	vdd_ core	jtag_ tdo
AA	gpmc _d1	gpmc _d0	etk_d3	etk_d8									
AB	etk_d5	etk_clk	etk_ctl	i2c3_scl	vss								
AC	gpmc _d3	gpmc _d2	etk_d0	i2c3_sda	gpmc _d7	gpmc _nwp	vdds	gpmc _wait1	NC	vss	gpmc _wait0	NC	NC
AD	gpmc _ncs1	etk_d7	etk_d2	etk_d1	gpmc _d6	gpmc _d5	sys_ nres warm	gpmc _ncs0	NC	gpmc_ nadv_ale	NC	NC	NC
AE	NC	pop_w2 _ae2	etk_d6	etk_d10	gpmc _d4	etk_d12	vss	NC	etk_d15	vdds	NC	NC	NC
AF	NC	NC	NC	pop_y2 _af4	pop_aa6 _af5	etk_d11	etk_d13	pop_y7_ _af8	etk_d14	pop_y9_ _af10	NC	pop_aa10 _af12	pop_aa11 _af13

Figure 2-12. CBC Pin Map [Quadrant C - Top View]

Copyright © 2010–2011, Texas Instruments Incorporated

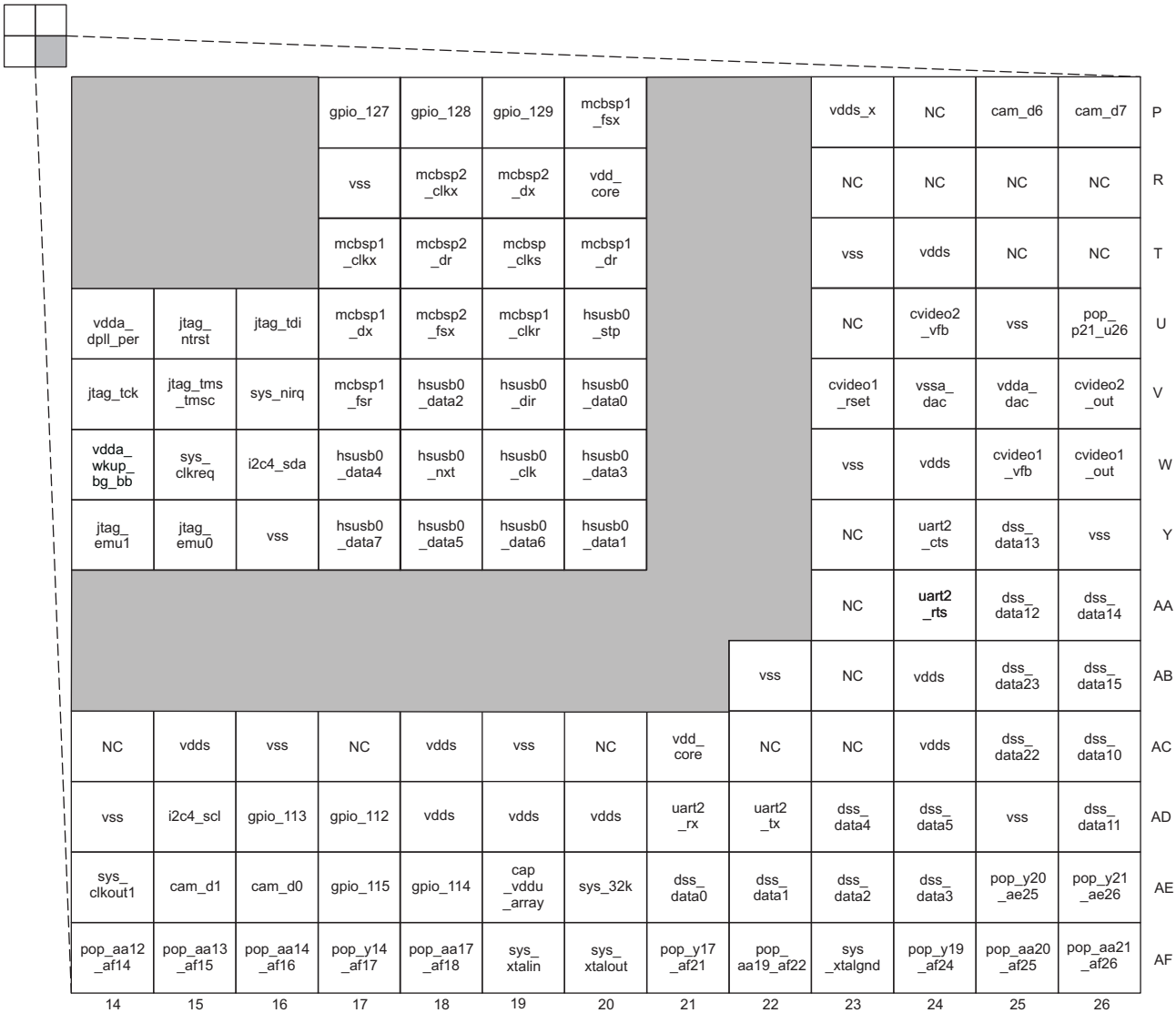

Figure 2-13. CBC Pin Map [Quadrant D - Top View]

	1	2	3	4	5	6	7	8	9	10	11	12
A	NC	NC		sdrc_a0	sdrc _dqs0		sdrc _dm2	sdrc _dqs2		sdrc _clk	sdrc _nclk	
B	NC	sdrc_a4	sdrc_a3	sdrc_a1	sdrc_d3	sdrc _dm0	sdrc_d7	sdrc_d18	sdrc_d19	sdrc_d21	sdrc_d8	sdrc_d10
C	gpmc _wait0	gpmc _wait3	sdrc_a5		sdrc_d1	sdrc_d2	sdrc_d6		sdrc_d16	sdrc_d20		sdrc_d9
D		gpmc _ncs3				sdrc_a2	sdrc_d0		sdrc_d4	sdrc_d5		sdrc_d22
E	gpmc _nwp	gpmc _ncs0	sdrc_a6				sdrc_a10		sdrc_a9	sdrc_a8		sdrc_d17
F	gpmc _nadv _ale	gpmc _noe	gpmc _ncs6	gpmc _ncs4		sdrc_a7	sdrc_a13		sdrc_a14	vdd_mpu _iva		vdd_ core
G		gpmc _a10	gpmc _nwe	gpmc _ncs7	gpmc _ncs5	sdrc_a11	sdrc_a12		vdd_mpu _iva	vdd_mpu _iva		vdd_ core
H	gpmc _a8	gpmc _a9						vdds_x	vdd_mpu _iva	vdd_mpu _iva	vss	vdd_ core
J	gpmc _a7	gpmc _a6	gpmc _a5	gpmc _a4		vdds _mem	vdds _mem	vdds _mem	vdd_mpu _iva	vdd_mpu _iva	vss	vss
K		gpmc _a3	gpmc _a2	gpmc _a1	gpmc_ nbe0_cle	vdds _mem	vdds _mem	vdds _mem		vss	vss	
L	gpmc_ nbe1	gpmc _d0						vss		vss	vdd_mpu _iva	vdd_mpu _iva
M	gpmc _d1	gpmc _d2	gpmc _d4	mcspi2 _cs1	mcspi2 _cs0	vdd_mpu _iva	vdd_mpu _iva	vdd_mpu _iva	vss	vss	vss	vdd_mpu _iva

A. Top Views are provided to assist in hardware debugging efforts.

Figure 2-14. CUS Pin Map [Quadrant A - Top View]

Copyright © 2010–2011, Texas Instruments Incorporated

13	14	15	16	17	18	19	20	21	22	23	24	
sdrc_ dqs1	sdrc_ d14		sdrc_ dm3	sdrc_ dqs3		sdrc_ ncs0	sdrc_ nwe		cam_hs	uart3_ _cts_ rctx	hdq_si0	A
sdrc_ dm1	sdrc_ d13	sdrc_ d15	sdrc_ d27	sdrc_ d30	sdrc_ d31	sdrc_ ncs1	sdrc_ cke0	cam_d5	cam_ xclka	uart3_ _rts_ sd	uart3_ _rx_ irrx	B
sdrc_ d12		sdrc_ d26	sdrc_ d28		sdrc_ ba0	sdrc_ ncas	sdrc_ cke1		cam_ xclkb	uart3_ _tx_ irtx		C
sdrc_ d11		sdrc_ d25	sdrc_ d29		sdrc_ ba1	sdrc_ nras				dss_ data20	dss_ data6	D
sdrc_ d23		sdrc_ d24	vdds_ mem		cam_vs				dss_ hsync	dss_ data7	dss_ data8	E
vdd_ core		vdds_ mem	vdds_ mem		cam_wen	cam_d3		cam_d10	dss_ vsync	dss_ data9		F
vdd_ core		vdds_ mem	vdds_ mem		vdda _dplls _dll	cam_d2	cam_d4	cam_d11	dss_ pclk	dss_ data17	dss_ data18	G
vdd_ core	vss	vdds_ mem	vss	cap_vdd _sram _core						dss_ data19	cam_fld	H
vss	vss	vss	vss	vdd_ core	vdd_ core	cam_ pclk	cam_ strobe	dss_ acbias	dss_ data16	cam_d8		J
	vss	vss		vdd_ core	vdd_ core	vdd_ core	i2c1_scl	i2c1_sda	dss_ data21	cam_d9	cam_d7	K
vss	vdd_ core	vdd_ core		vss						mmc1_ cmd	cam_d6	L
vss	vdd_ core	vdd_ core	vss	vdds	vdds	vdds	mmc1_ dat2	mmc1_ dat1	mmc1_ dat0	mmc1_ clk		M

Figure 2-15. CUS Pin Map [Quadrant B - Top View]

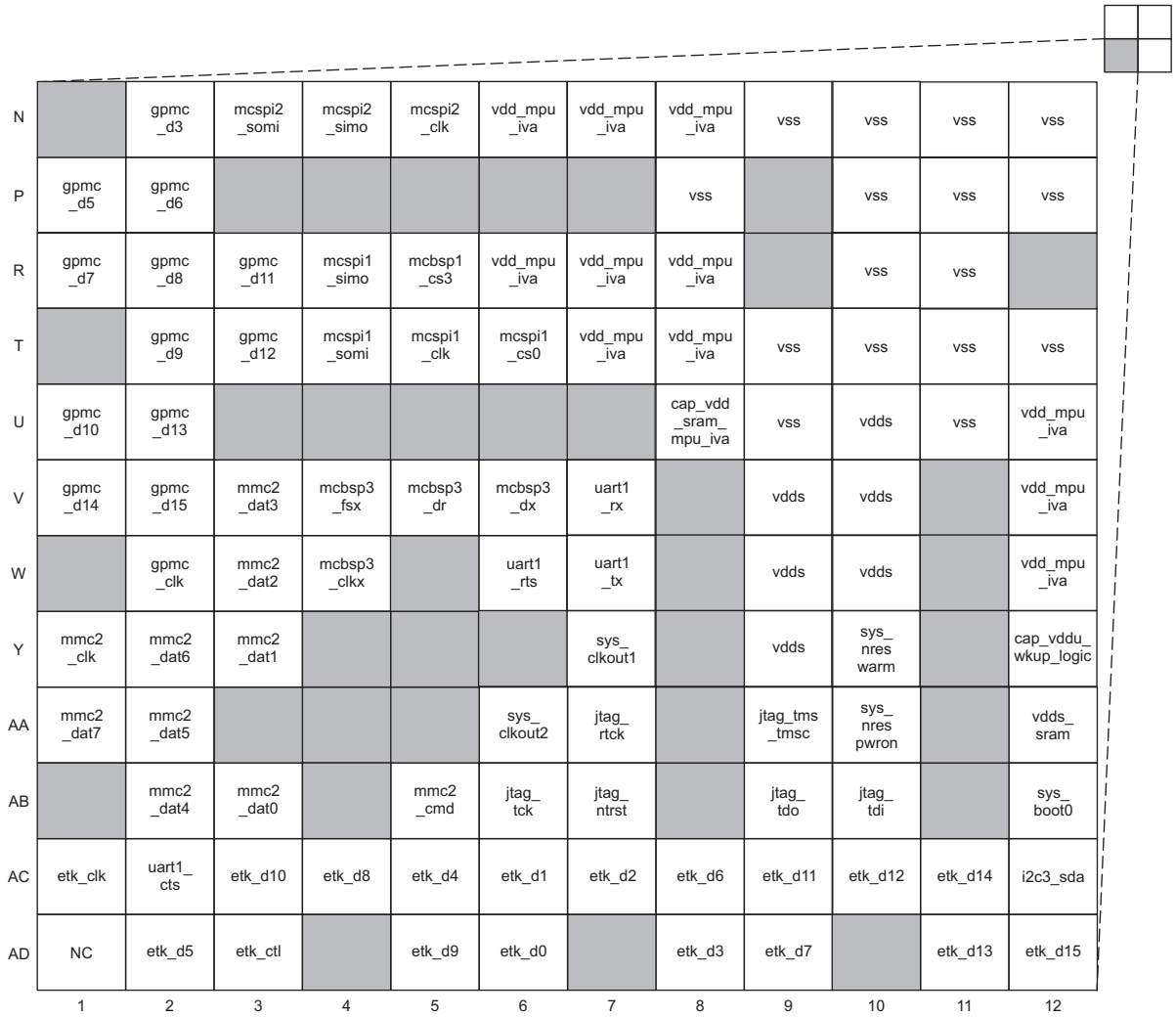

	1	2	3	4	5	6	7	8	9	10	11	12
N		gpmc _d3	mcspi2 _somi	mcspi2 _simo	mcspi2 _clk	vdd_mpu _iva	vdd_mpu _iva	vdd_mpu _iva	vss	vss	vss	vss
P	gpmc _d5	gpmc _d6						vss		vss	vss	vss
R	gpmc _d7	gpmc _d8	gpmc _d11	mcspi1 _simo	mcbsp1 _cs3	vdd_mpu _iva	vdd_mpu _iva	vdd_mpu _iva		vss	vss	
T		gpmc _d9	gpmc _d12	mcspi1 _somi	mcspi1 _clk	mcspi1 _cs0	vdd_mpu _iva	vdd_mpu _iva	vss	vss	vss	vss
U	gpmc _d10	gpmc _d13						cap_vdd _sram_ mpu_iva	vss	vdds	vss	vdd_mpu _iva
V	gpmc _d14	gpmc _d15	mmc2 _dat3	mcbsp3 _fsx	mcbsp3 _dr	mcbsp3 _dx	uart1 _rx		vdds	vdds		vdd_mpu _iva
W		gpmc _clk	mmc2 _dat2	mcbsp3 _clkx		uart1 _rts	uart1 _tx		vdds	vdds		vdd_mpu _iva
Y	mmc2 _clk	mmc2 _dat6	mmc2 _dat1				sys_ clkout1		vdds	sys_ nres warm		cap_vddu_ wkup_logic
AA	mmc2 _dat7	mmc2 _dat5				sys_ clkout2	jtag_ rtck		jtag_tms _tmsc	sys_ nres pwron		vdds_ sram
AB		mmc2 _dat4	mmc2 _dat0		mmc2 _cmd	jtag_ tck	jtag_ ntrst		jtag_ tdo	jtag_ tdi		sys_ boot0
AC	etk_clk	uart1_ cts	etk_d10	etk_d8	etk_d4	etk_d1	etk_d2	etk_d6	etk_d11	etk_d12	etk_d14	i2c3_sda
AD	NC	etk_d5	etk_ctl		etk_d9	etk_d0		etk_d3	etk_d7		etk_d13	etk_d15

Figure 2-16. CUS Pin Map [Quadrant C - Top View]

Copyright © 2010–2011, Texas Instruments Incorporated

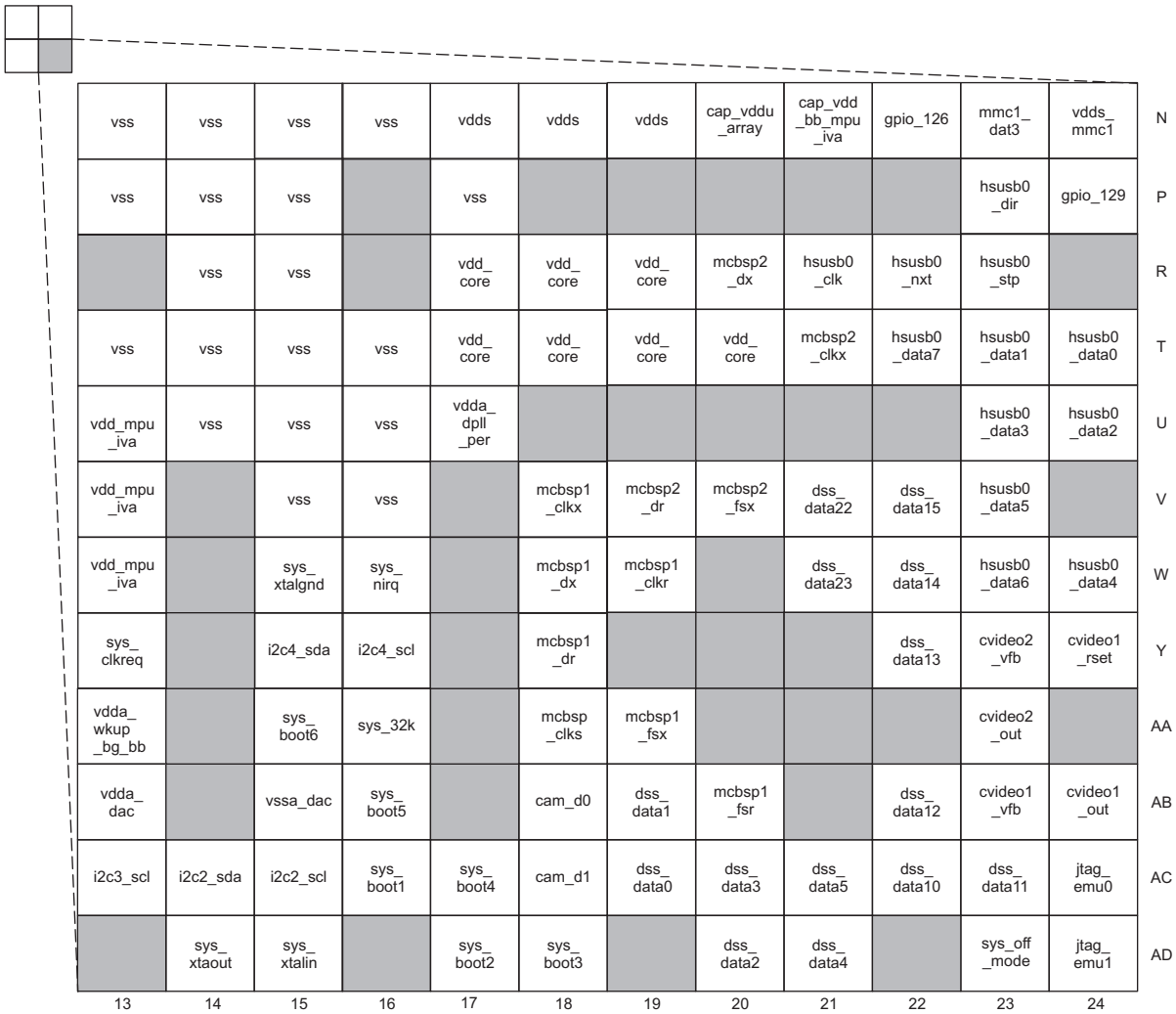

Figure 2-17. CUS Pin Map [Quadrant D - Top View]

2.3 Ball Characteristics

Table 2-1 through Table 2-3 describe the terminal characteristics and the signals multiplexed on each pin for the CBP, CBC, and CUS packages, respectively. The following list describes the table column headers.

1. **BALL BOTTOM:** Ball number(s) on the bottom side associated with each signal(s) on the bottom.
2. **PIN NAME:** Names of signals multiplexed on each ball (also notice that the name of the pin is the signal name in mode 0).
   Note: Table 2-3 does not take into account subsystem pin multiplexing options. Subsystem pin multiplexing options are described in Section 2.5, *Signal Descriptions.*
3. **MODE:** Multiplexing mode number.
   (a) Mode 0 is the primary mode; this means that when mode 0 is set, the function mapped on the pin corresponds to the name of the pin. There is always a function mapped on the primary mode. Notice that primary mode is not necessarily the default mode.

   Note: The default mode is the mode at the release of the reset; also see the RESET REL. MODE column.

   (b) Modes 1 to 7 are possible modes for alternate functions. On each pin, some modes are effectively used for alternate functions, while some modes are not used and do not correspond to a functional configuration.
4. **TYPE:** Signal direction
   - I = Input
   - O = Output
   - I/O = Input/Output
   - D = Open drain
   - DS = Differential
   - A = Analog
   - PWR = Power
   - GND = Ground

   Note: In the safe_mode, the buffer is configured in high-impedance.
5. **BALL RESET STATE:** The state of the terminal at the power-on reset.
   - 0: The buffer drives V_{OL} (pulldown/pullup resistor not activated)
     0(PD): The buffer drives V_{OL} with an active pulldown resistor.
   - 1: The buffer drives V_{OH} (pulldown/pullup resistor not activated)
     1(PU): The buffer drives V_{OH} with an active pullup resistor.
   - Z: High-impedance
   - L: High-impedance with an active pulldown resistor
   - H : High-impedance with an active pullup resistor
6. **BALL RESET REL. STATE:** The state of the terminal at the release of the System Control Module reset (PRCM CORE_RSTPWRON_RET reset signal).
   - 0: The buffer drives V_{OL} (pulldown/pullup resistor not activated)
     0(PD): The buffer drives V_{OL} with an active pulldown resistor.
   - 1: The buffer drives V_{OH} (pulldown/pullup resistor not activated)
     1(PU): The buffer drives V_{OH} with an active pullup resistor.
   - Z: High-impedance
   - L: High-impedance with an active pulldown resistor
   - H : High-impedance with an active pullup resistor
7. **RESET REL. MODE:** The mode is automatically configured at the release of the System Control Module reset (PRCM CORE_RSTPWRON_RET reset signal).
8. **POWER:** The voltage supply that powers the terminal's I/O buffers.
9. **HYS:** Indicates if the input buffer is with hysteresis.
10. **BUFFER STRENGTH:** Drive strength of the associated output buffer.

 Copyright © 2010–2011, Texas Instruments Incorporated

11. **PULL U/D - TYPE:** Denotes the presence of an internal pullup or pulldown resistor. Pullup and pulldown resistors can be enabled or disabled via software.
Note: The pullup/pulldown drive strength is equal to minimum = 50µA, typical = 100 µA, maximum = 250 µA (unless otherwise specified), except for CBP balls P27, P26, R27, and R25, and CUS balls N22 and P24, where the pulldown drive strength is equal to 1.8 kΩ.
12. **IO CELL:** IO cell information.

Note: Configuring two pins to the same input signal is not supported as it can yield unexpected results. This can be easily prevented with the proper software configuration.

NOTE

In the DM3730/25 device, new Far End load Settings registers are added for some IOs. This new feature configures the IO according to the transmission line and the application/peripheral load. For a full description on these registers, see the System Control Module / SCM Functional Description / Functional Register Description / Signal Integrity Parameter Control Registers with Pad Group Assignment section of the *AM/DM37x Multimedia Device Technical Reference Manual* (literature number SPRUGN4).

Table 2-1. Ball Characteristics (CBP Pkg.)[3]

BALL BOTTOM [1]	BALL TOP [1]	PIN NAME [2]	MODE [3]	TYPE [4]	BALL RESET STATE [5]	BALL RESET REL. STATE [6]	RESET REL. MODE [7]	POWER [8]	HYS [9]	BUFFER STRENGTH (mA) [10]	PULLUP /DOWN TYPE [11]	IO CELL [12]
NA	J2	sdrc_d0	0	IO	L	Z	0	vdds_mem	Yes	4 [12]	PU/ PD	LVCMOS
NA	J1	sdrc_d1	0	IO	L	Z	0	vdds_mem	Yes	4 [12]	PU/ PD	LVCMOS
NA	G2	sdrc_d2	0	IO	L	Z	0	vdds_mem	Yes	4 [12]	PU/ PD	LVCMOS
NA	G1	sdrc_d3	0	IO	L	Z	0	vdds_mem	Yes	4 [12]	PU/ PD	LVCMOS
NA	F2	sdrc_d4	0	IO	L	Z	0	vdds_mem	Yes	4 [12]	PU/ PD	LVCMOS
NA	F1	sdrc_d5	0	IO	L	Z	0	vdds_mem	Yes	4 [12]	PU/ PD	LVCMOS
NA	D2	sdrc_d6	0	IO	L	Z	0	vdds_mem	Yes	4 [12]	PU/ PD	LVCMOS
NA	D1	sdrc_d7	0	IO	L	Z	0	vdds_mem	Yes	4 [12]	PU/ PD	LVCMOS
NA	B13	sdrc_d8	0	IO	L	Z	0	vdds_mem	Yes	4 [12]	PU/ PD	LVCMOS
NA	A13	sdrc_d9	0	IO	L	Z	0	vdds_mem	Yes	4 [12]	PU/ PD	LVCMOS
NA	B14	sdrc_d10	0	IO	L	Z	0	vdds_mem	Yes	4 [12]	PU/ PD	LVCMOS
NA	A14	sdrc_d11	0	IO	L	Z	0	vdds_mem	Yes	4 [12]	PU/ PD	LVCMOS
NA	B16	sdrc_d12	0	IO	L	Z	0	vdds_mem	Yes	4 [12]	PU/ PD	LVCMOS
NA	A16	sdrc_d13	0	IO	L	Z	0	vdds_mem	Yes	4 [12]	PU/ PD	LVCMOS
NA	B19	sdrc_d14	0	IO	L	Z	0	vdds_mem	Yes	4 [12]	PU/ PD	LVCMOS
NA	A19	sdrc_d15	0	IO	L	Z	0	vdds_mem	Yes	4 [12]	PU/ PD	LVCMOS
NA	B3	sdrc_d16	0	IO	L	Z	0	vdds_mem	Yes	4 [12]	PU/ PD	LVCMOS
NA	A3	sdrc_d17	0	IO	L	Z	0	vdds_mem	Yes	4 [12]	PU/ PD	LVCMOS
NA	B5	sdrc_d18	0	IO	L	Z	0	vdds_mem	Yes	4 [12]	PU/ PD	LVCMOS
NA	A5	sdrc_d19	0	IO	L	Z	0	vdds_mem	Yes	4 [12]	PU/ PD	LVCMOS
NA	B8	sdrc_d20	0	IO	L	Z	0	vdds_mem	Yes	4 [12]	PU/ PD	LVCMOS
NA	A8	sdrc_d21	0	IO	L	Z	0	vdds_mem	Yes	4 [12]	PU/ PD	LVCMOS
NA	B9	sdrc_d22	0	IO	L	Z	0	vdds_mem	Yes	4 [12]	PU/ PD	LVCMOS
NA	A9	sdrc_d23	0	IO	L	Z	0	vdds_mem	Yes	4 [12]	PU/ PD	LVCMOS
NA	B21	sdrc_d24	0	IO	L	Z	0	vdds_mem	Yes	4 [12]	PU/ PD	LVCMOS
NA	A21	sdrc_d25	0	IO	L	Z	0	vdds_mem	Yes	4 [12]	PU/ PD	LVCMOS
NA	D22	sdrc_d26	0	IO	L	Z	0	vdds_mem	Yes	4 [12]	PU/ PD	LVCMOS
NA	D23	sdrc_d27	0	IO	L	Z	0	vdds_mem	Yes	4 [12]	PU/ PD	LVCMOS
NA	E22	sdrc_d28	0	IO	L	Z	0	vdds_mem	Yes	4 [12]	PU/ PD	LVCMOS
NA	E23	sdrc_d29	0	IO	L	Z	0	vdds_mem	Yes	4 [12]	PU/ PD	LVCMOS
NA	G22	sdrc_d30	0	IO	L	Z	0	vdds_mem	Yes	4 [12]	PU/ PD	LVCMOS
NA	G23	sdrc_d31	0	IO	L	Z	0	vdds_mem	Yes	4 [12]	PU/ PD	LVCMOS
NA	AB21	sdrc_ba0	0	O	0	0	0	vdds_mem	No	4 [12]	NA	LVCMOS
NA	AC21	sdrc_ba1	0	O	0	0	0	vdds_mem	No	4 [12]	NA	LVCMOS

Copyright © 2010–2011, Texas Instruments Incorporated

Table 2-1. Ball Characteristics (CBP Pkg.)[3] (continued)

BALL BOTTOM [1]	BALL TOP [1]	PIN NAME [2]	MODE [3]	TYPE [4]	BALL RESET STATE [5]	BALL RESET REL. STATE [6]	RESET REL. MODE [7]	POWER [8]	HYS [9]	BUFFER STRENGTH (mA) [10]	PULLUP /DOWN TYPE [11]	IO CELL [12]
NA	N22	sdrc_a0	0	O	0	0	0	vdds_mem	No	4 [12]	NA	LVCMOS
NA	N23	sdrc_a1	0	O	0	0	0	vdds_mem	No	4 [12]	NA	LVCMOS
NA	P22	sdrc_a2	0	O	0	0	0	vdds_mem	No	4 [12]	NA	LVCMOS
NA	P23	sdrc_a3	0	O	0	0	0	vdds_mem	No	4 [12]	NA	LVCMOS
NA	R22	sdrc_a4	0	O	0	0	0	vdds_mem	No	4 [12]	NA	LVCMOS
NA	R23	sdrc_a5	0	O	0	0	0	vdds_mem	No	4 [12]	NA	LVCMOS
NA	T22	sdrc_a6	0	O	0	0	0	vdds_mem	No	4 [12]	NA	LVCMOS
NA	T23	sdrc_a7	0	O	0	0	0	vdds_mem	No	4 [12]	NA	LVCMOS
NA	U22	sdrc_a8	0	O	0	0	0	vdds_mem	No	4 [12]	NA	LVCMOS
NA	U23	sdrc_a9	0	O	0	0	0	vdds_mem	No	4 [12]	NA	LVCMOS
NA	V22	sdrc_a10	0	O	0	0	0	vdds_mem	No	4 [12]	NA	LVCMOS
NA	V23	sdrc_a11	0	O	0	0	0	vdds_mem	No	4 [12]	NA	LVCMOS
NA	W22	sdrc_a12	0	O	0	0	0	vdds_mem	No	4 [12]	NA	LVCMOS
NA	W23	sdrc_a13	0	O	0	0	0	vdds_mem	No	4 [12]	NA	LVCMOS
NA	Y22	sdrc_a14	0	O	0	0	0	vdds_mem	No	4 [12]	NA	LVCMOS
NA	M22	sdrc_ncs0	0	O	1	1	0	vdds_mem	No	4 [12]	NA	LVCMOS
NA	M23	sdrc_ncs1	0	O	1	1	0	vdds_mem	No	4 [12]	NA	LVCMOS
NA	A11	sdrc_clk	0	IO	L	0	0	vdds_mem	Yes	4 [12]	PU/ PD	LVCMOS
NA	B11	sdrc_nclk	0	O	1	1	0	vdds_mem	No	4 [12]	NA	LVCMOS
NA	J22	sdrc_cke0	0	O	H	1	7	vdds_mem	Yes	4 [12]	PU/ PD	LVCMOS
		safe_mode_out1[13]	7									
NA	J23	sdrc_cke1	0	O	H	1	7	vdds_mem	NA	4 [12]	PU/ PD	LVCMOS
		safe_mode_out1[13]	7									
NA	L23	sdrc_nras	0	O	1	1	0	vdds_mem	No	4 [12]	NA	LVCMOS
NA	L22	sdrc_ncas	0	O	1	1	0	vdds_mem	No	4 [12]	NA	LVCMOS
NA	K23	sdrc_nwe	0	O	1	1	0	vdds_mem	No	4 [12]	NA	LVCMOS
NA	C1	sdrc_dm0	0	O	0	0	0	vdds_mem	No	4 [12]	NA	LVCMOS
NA	A17	sdrc_dm1	0	O	0	0	0	vdds_mem	No	4 [12]	NA	LVCMOS
NA	A6	sdrc_dm2	0	O	0	0	0	vdds_mem	No	4 [12]	NA	LVCMOS
NA	A20	sdrc_dm3	0	O	0	0	0	vdds_mem	No	4 [12]	NA	LVCMOS
NA	C2	sdrc_dqs0	0	IO	L	Z	0	vdds_mem	Yes	4 [12]	PU/ PD	LVCMOS
NA	B17	sdrc_dqs1	0	IO	L	Z	0	vdds_mem	Yes	4 [12]	PU/ PD	LVCMOS
NA	B6	sdrc_dqs2	0	IO	L	Z	0	vdds_mem	Yes	4 [12]	PU/ PD	LVCMOS
NA	B20	sdrc_dqs3	0	IO	L	Z	0	vdds_mem	Yes	4 [12]	PU/ PD	LVCMOS
N4	AC15	gpmc_a1	0	O	L	L	7	vdds_mem	Yes	8	PU/ PD	LVCMOS
		gpio_34	4	IO								
		safe_mode	7									
M4	AB15	gpmc_a2	0	O	L	L	7	vdds_mem	Yes	8	PU/ PD	LVCMOS
		gpio_35	4	IO								
		safe_mode	7									
L4	AC16	gpmc_a3	0	O	L	L	7	vdds_mem	Yes	8	PU/ PD	LVCMOS
		gpio_36	4	IO								
		safe_mode	7									
K4	AB16	gpmc_a4	0	O	L	L	7	vdds_mem	Yes	8	PU/ PD	LVCMOS
		gpio_37	4	IO								
		safe_mode	7									
T3	AC17	gpmc_a5	0	O	L	L	7	vdds_mem	Yes	8	PU/ PD	LVCMOS
		gpio_38	4	IO								
		safe_mode	7									
R3	AB17	gpmc_a6	0	O	H	H	7	vdds_mem	Yes	8	PU/ PD	LVCMOS
		gpio_39	4	IO								
		safe_mode	7									

Copyright © 2010–2011, Texas Instruments Incorporated

Table 2-1. Ball Characteristics (CBP Pkg.)[3] (continued)

BALL BOTTOM [1]	BALL TOP [1]	PIN NAME [2]	MODE [3]	TYPE [4]	BALL RESET STATE [5]	BALL RESET REL. STATE [6]	RESET REL. MODE [7]	POWER [8]	HYS [9]	BUFFER STRENGTH (mA) [10]	PULLUP /DOWN TYPE [11]	IO CELL [12]
N3	AC18	gpmc_a7	0	O	H	H	7	vdds_mem	Yes	8	PU/ PD	LVCMOS
		gpio_40	4	IO								
		safe_mode	7									
M3	AB18	gpmc_a8	0	O	H	H	7	vdds_mem	Yes	8	PU/ PD	LVCMOS
		gpio_41	4	IO								
		safe_mode	7									
L3	AC19	gpmc_a9	0	O	H	H	7	vdds_mem	Yes	8	PU/ PD	LVCMOS
		sys_ndmareq2	1	I								
		gpio_42	4	IO								
		safe_mode	7									
K3	AB19	gpmc_a10	0	O	H	H	7	vdds_mem	Yes	8	PU/ PD	LVCMOS
		sys_ndmareq3	1	I								
		gpio_43	4	IO								
		safe_mode	7									
NA	AC20	gpmc_a11	0	O	L	L	7	vdds_mem	Yes	8	PU/ PD	LVCMOS
		safe_mode	7									
K1	M2	gpmc_d0	0	IO	H	H	0	vdds_mem	Yes	8	PU/ PD	LVCMOS
L1	M1	gpmc_d1	0	IO	H	H	0	vdds_mem	Yes	8	PU/ PD	LVCMOS
L2	N2	gpmc_d2	0	IO	H	H	0	vdds_mem	Yes	8	PU/ PD	LVCMOS
P2	N1	gpmc_d3	0	IO	H	H	0	vdds_mem	Yes	8	PU/ PD	LVCMOS
T1	R2	gpmc_d4	0	IO	H	H	0	vdds_mem	Yes	8	PU/ PD	LVCMOS
V1	R1	gpmc_d5	0	IO	H	H	0	vdds_mem	Yes	8	PU/ PD	LVCMOS
V2	T2	gpmc_d6	0	IO	H	H	0	vdds_mem	Yes	8	PU/ PD	LVCMOS
W2	T1	gpmc_d7	0	IO	H	H	0	vdds_mem	Yes	8	PU/ PD	LVCMOS
H2	AB3	gpmc_d8	0	IO	H	H	0	vdds_mem	Yes	8	PU/ PD	LVCMOS
		gpio_44	4	IO								
		safe_mode	7									
K2	AC3	gpmc_d9	0	IO	H	H	0	vdds_mem	Yes	8	PU/ PD	LVCMOS
		gpio_45	4	IO								
		safe_mode	7									
P1	AB4	gpmc_d10	0	IO	H	H	0	vdds_mem	Yes	8	PU/ PD	LVCMOS
		gpio_46	4	IO								
		safe_mode	7									
R1	AC4	gpmc_d11	0	IO	H	H	0	vdds_mem	Yes	8	PU/ PD	LVCMOS
		gpio_47	4	IO								
		safe_mode	7									
R2	AB6	gpmc_d12	0	IO	H	H	0	vdds_mem	Yes	8	PU/ PD	LVCMOS
		gpio_48	4	IO								
		safe_mode	7									
T2	AC6	gpmc_d13	0	IO	H	H	0	vdds_mem	Yes	8	PU/ PD	LVCMOS
		gpio_49	4	IO								
		safe_mode	7									
W1	AB7	gpmc_d14	0	IO	H	H	0	vdds_mem	Yes	8	PU/ PD	LVCMOS
		gpio_50	4	IO								
		safe_mode	7									
Y1	AC7	gpmc_d15	0	IO	H	H	0	vdds_mem	Yes	8	PU/ PD	LVCMOS
		gpio_51	4	IO								
		safe_mode	7									
G4	Y2	gpmc_ncs0	0	O	1	1	0	vdds_mem	NA	8	NA	LVCMOS
H3	Y1	gpmc_ncs1	0	O	H	1	0	vdds_mem	Yes	8	PU/ PD	LVCMOS
		gpio_52	4	IO								
		safe_mode	7									

Copyright © 2010–2011, Texas Instruments Incorporated

Table 2-1. Ball Characteristics (CBP Pkg.)[3] (continued)

BALL BOTTOM [1]	BALL TOP [1]	PIN NAME [2]	MODE [3]	TYPE [4]	BALL RESET STATE [5]	BALL RESET REL. STATE [6]	RESET REL. MODE [7]	POWER [8]	HYS [9]	BUFFER STRENGTH (mA) [10]	PULLUP /DOWN TYPE [11]	IO CELL [12]
V8	NA	gpmc_ncs2	0	O	H	H	7	vdds_mem	Yes	8	PU/ PD	LVCMOS
		gpio_53	4	IO								
		safe_mode	7									
U8	NA	gpmc_ncs3	0	O	H	H	7	vdds_mem	Yes	8	PU/ PD	LVCMOS
		sys_ndmareq0	1	I								
		gpio_54	4	IO								
		safe_mode	7									
T8	NA	gpmc_ncs4	0	O	H	H	7	vdds_mem	Yes	8	PU/ PD	LVCMOS
		sys_ndmareq1	1	I								
		mcbsp4_clkx	2	IO								
		gpt_9_pwm_evt	3	IO								
		gpio_55	4	IO								
		safe_mode	7									
R8	NA	gpmc_ncs5	0	O	H	H	7	vdds_mem	Yes	8	PU/ PD	LVCMOS
		sys_ndmareq2	1	I								
		mcbsp4_dr	2	I								
		gpt_10_pwm_evt	3	IO								
		gpio_56	4	IO								
		safe_mode	7									
P8	NA	gpmc_ncs6	0	O	H	H	7	vdds_mem	Yes	8	PU/ PD	LVCMOS
		sys_ndmareq3	1	I								
		mcbsp4_dx	2	IO								
		gpt_11_pwm_evt	3	IO								
		gpio_57	4	IO								
		safe_mode	7									
N8	NA	gpmc_ncs7	0	O	H	H	7	vdds_mem	Yes	8	PU/ PD	LVCMOS
		gpmc_io_dir	1	O								
		mcbsp4_fsx	2	IO								
		gpt_8_pwm_evt	3	IO								
		gpio_58	4	IO								
		safe_mode	7									
T4	W2	gpmc_clk	0	O	L	0	0	vdds_mem	Yes	8	PU/ PD	LVCMOS
		gpio_59	4	IO								
		safe_mode	7									
F3	W1	gpmc_nadv_ale	0	O	0	0	0	vdds_mem	NA	8	PU/ PD	LVCMOS
G2	V2	gpmc_noe	0	O	1	1	0	vdds_mem	NA	8	PU/ PD	LVCMOS
F4	V1	gpmc_nwe	0	O	1	1	0	vdds_mem	NA	8	PU/ PD	LVCMOS
G3	AC12	gpmc_nbe0_cle	0	O	L	0	0	vdds_mem	Yes	8	PU/ PD	LVCMOS
		gpio_60	4	IO								
		safe_mode	7									
U3	NA	gpmc_nbe1	0	O	L	L	7	vdds_mem	Yes	8	PU/ PD	LVCMOS
		gpio_61	4	IO								
		safe_mode	7									
H1	AB10	gpmc_nwp	0	O	L	0	0	vdds_mem	Yes	8	PU/ PD	LVCMOS
		gpio_62	4	IO								
		safe_mode	7									
M8	AB12	gpmc_wait0	0	I	H	H	0	vdds_mem	Yes	NA	PU/ PD	LVCMOS
L8	AC10	gpmc_wait1	0	I	H	H	7	vdds_mem	Yes	8	PU/ PD	LVCMOS
		gpio_63	4	IO								
		safe_mode	7									
K8	NA	gpmc_wait2	0	I	H	H	7	vdds_mem	Yes	8	PU/ PD	LVCMOS
		uart4_tx	2	O								
		gpio_64	4	IO								
		safe_mode	7									

Copyright © 2010–2011, Texas Instruments Incorporated

Table 2-1. Ball Characteristics (CBP Pkg.)[3] (continued)

BALL BOTTOM [1]	BALL TOP [1]	PIN NAME [2]	MODE [3]	TYPE [4]	BALL RESET STATE [5]	BALL RESET REL. STATE [6]	RESET REL. MODE [7]	POWER [8]	HYS [9]	BUFFER STRENGTH (mA) [10]	PULLUP /DOWN TYPE [11]	IO CELL [12]
J8	NA	gpmc_wait3	0	I	H	H	7	vdds_mem	Yes	8	PU/ PD	LVCMOS
		sys_ndmareq1	1	I								
		uart4_rx	2	I								
		gpio_65	4	IO								
		safe_mode	7									
D28	NA	dss_pclk	0	O	H	H	7	vdds	Yes	8	PU/ PD	LVCMOS
		gpio_66	4	IO								
		hw_dbg12	5	O								
		safe_mode	7									
D26	NA	dss_hsync	0	O	H	H	7	vdds	Yes	8	PU/ PD	LVCMOS
		gpio_67	4	IO								
		hw_dbg13	5	O								
		safe_mode	7									
D27	NA	dss_vsync	0	O	H	H	7	vdds	Yes	8	PU/ PD	LVCMOS
		gpio_68	4	IO								
		safe_mode	7									
E27	NA	dss_acbias	0	O	L	L	7	vdds	Yes	8	PU/ PD	LVCMOS
		gpio_69	4	IO								
		safe_mode	7									
AG22	NA	dss_data0	0	IO	L	L	7	vdds	Yes	8	PU/ PD	LVCMOS
		uart1_cts	2	I						NA		
		gpio_70	4	IO						8		
		safe_mode	7							8		
AH22	NA	dss_data1	0	IO	L	L	7	vdds	Yes	8	PU/ PD	LVCMOS
		uart1_rts	2	O						8		
		gpio_71	4	IO						8		
		safe_mode	7							8		
AG23	NA	dss_data2	0	IO	L	L	7	vdds	Yes	8	PU/ PD	LVCMOS
		gpio_72	4	IO						8		
		safe_mode	7							8		
AH23	NA	dss_data3	0	IO	L	L	7	vdds	Yes	8	PU/ PD	LVCMOS
		gpio_73	4	IO						8		
		safe_mode	7							8		
AG24	NA	dss_data4	0	IO	L	L	7	vdds	Yes	8	PU/ PD	LVCMOS
		uart3_rx_irrx	2	I						NA		
		gpio_74	4	IO						8		
		safe_mode	7							8		
AH24	NA	dss_data5	0	IO	L	L	7	vdds	Yes	8	PU/ PD	LVCMOS
		uart3_tx_irtx	2	O						8		
		gpio_75	4	IO						8		
		safe_mode	7							8		
E26	NA	dss_data6	0	IO	L	L	7	vdds	Yes	8	PU/ PD	LVCMOS
		uart1_tx	2	O								
		gpio_76	4	IO								
		hw_dbg14	5	O								
		safe_mode	7									
F28	NA	dss_data7	0	IO	L	L	7	vdds	Yes	8	PU/ PD	LVCMOS
		uart1_rx	2	I								
		gpio_77	4	IO								
		hw_dbg15	5	O								
		safe_mode	7									

Copyright © 2010–2011, Texas Instruments Incorporated

Table 2-1. Ball Characteristics (CBP Pkg.)[3] (continued)

BALL BOTTOM [1]	BALL TOP [1]	PIN NAME [2]	MODE [3]	TYPE [4]	BALL RESET STATE [5]	BALL RESET REL. STATE [6]	RESET REL. MODE [7]	POWER [8]	HYS [9]	BUFFER STRENGTH (mA) [10]	PULLUP /DOWN TYPE [11]	IO CELL [12]
F27	NA	dss_data8	0	IO	L	L	7	vdds	Yes	8	PU/ PD	LVCMOS
		uart3_rx_irrx	2	I								
		gpio_78	4	IO								
		hw_dbg16	5	O								
		safe_mode	7									
G26	NA	dss_data9	0	IO	L	L	7	vdds	Yes	8	PU/ PD	LVCMOS
		uart3_tx_irtx	2	O								
		gpio_79	4	IO								
		hw_dbg17	5	O								
		safe_mode	7									
AD28	NA	dss_data10	0	IO	L	L	7	vdds	Yes	8	PU/ PD	LVCMOS
		gpio_80	4	IO								
		safe_mode	7									
AD27	NA	dss_data11	0	IO	L	L	7	vdds	Yes	8	PU/ PD	LVCMOS
		gpio_81	4	IO								
		safe_mode	7									
AB28	NA	dss_data12	0	IO	L	L	7	vdds	Yes	8	PU/ PD	LVCMOS
		gpio_82	4	IO								
		safe_mode	7									
AB27	NA	dss_data13	0	IO	L	L	7	vdds	Yes	8	PU/ PD	LVCMOS
		gpio_83	4	IO								
		safe_mode	7									
AA28	NA	dss_data14	0	IO	L	L	7	vdds	Yes	8	PU/ PD	LVCMOS
		gpio_84	4	IO								
		safe_mode	7									
AA27	NA	dss_data15	0	IO	L	L	7	vdds	Yes	8	PU/ PD	LVCMOS
		gpio_85	4	IO								
		safe_mode	7									
G25	NA	dss_data16	0	IO	L	L	7	vdds	Yes	8	PU/ PD	LVCMOS
		gpio_86	4	IO								
		safe_mode	7									
H27	NA	dss_data17	0	IO	L	L	7	vdds	Yes	8	PU/ PD	LVCMOS
		gpio_87	4	IO								
		safe_mode	7									
H26	NA	dss_data18	0	IO	L	L	7	vdds	Yes	8	PU/ PD	LVCMOS
		mcspi3_clk	2	IO								
		dss_data0	3	IO								
		gpio_88	4	IO								
		safe_mode	7									
H25	NA	dss_data19	0	IO	L	L	7	vdds	Yes	8	PU/ PD	LVCMOS
		mcspi3_simo	2	IO								
		dss_data1	3	IO								
		gpio_89	4	IO								
		safe_mode	7									
E28	NA	dss_data20	0	O	H	H	7	vdds	Yes	8	PU/ PD	LVCMOS
		mcspi3_somi	2	IO								
		dss_data2	3	IO								
		gpio_90	4	IO								
		safe_mode	7									
J26	NA	dss_data21	0	O	L	L	7	vdds	Yes	8	PU/ PD	LVCMOS
		mcspi3_cs0	2	IO								
		dss_data3	3	IO								
		gpio_91	4	IO								
		safe_mode	7									

Copyright © 2010–2011, Texas Instruments Incorporated

Table 2-1. Ball Characteristics (CBP Pkg.)[3] (continued)

BALL BOTTOM [1]	BALL TOP [1]	PIN NAME [2]	MODE [3]	TYPE [4]	BALL RESET STATE [5]	BALL RESET REL. STATE [6]	RESET REL. MODE [7]	POWER [8]	HYS [9]	BUFFER STRENGTH (mA) [10]	PULLUP /DOWN TYPE [11]	IO CELL [12]
AC27	NA	dss_data22	0	O	L	L	7	vdds	Yes	8	PU/ PD	LVCMOS
		mcspi3_cs1	2	O								
		dss_data4	3	IO								
		gpio_92	4	IO								
		safe_mode	7									
AC28	NA	dss_data23	0	O	L	L	7	vdds	Yes	8	PU/ PD	LVCMOS
		dss_data5	3	IO								
		gpio_93	4	IO								
		safe_mode	7									
W28	NA	cvideo2_out	0	AO	0	0	0	vdda_dac	NA	NA[4]	NA	10-bit DAC
Y28	NA	cvideo1_out	0	AO	0	0	0	vdda_dac	NA	NA[4]	NA	10-bit DAC
Y27	NA	cvideo1_vfb	0	AO	0	NA	0	vdda_dac	NA	NA[10]	NA	10-bit DAC
W27	NA	cvideo2_vfb	0	AO	0	NA	0	vdda_dac	NA	NA[10]	NA	10-bit DAC
W26	NA	cvideo1_rset	0	AIO	0	NA	0	vdda_dac	No	NA	NA	10-bit DAC
A24	NA	cam_hs	0	IO	L	L	7	vdds	Yes	4	PU/ PD	LVCMOS
		gpio_94	4	IO								
		hw_dbg0	5	O								
		safe_mode	7									
A23	NA	cam_vs	0	IO	L	L	7	vdds	Yes	4	PU/ PD	LVCMOS
		gpio_95	4	IO								
		hw_dbg1	5	O								
		safe_mode	7									
C25	NA	cam_xclka	0	O	L	L	7	vdds	Yes	4	PU/ PD	LVCMOS
		gpio_96	4	IO								
		safe_mode	7									
C27	NA	cam_pclk	0	I	L	L	7	vdds	Yes	4	PU/ PD	LVCMOS
		gpio_97	4	IO								
		hw_dbg2	5	O								
		safe_mode	7									
C23	NA	cam_fld	0	IO	L	L	7	vdds	Yes	4	PU/ PD	LVCMOS
		cam_global_reset	2	IO								
		gpio_98	4	IO								
		hw_dbg3	5	O								
		safe_mode	7									
AG17	NA	cam_d0	0	I	L	L	7	vdds	Yes	NA	PU/PD	LVCMOS
		gpio_99	4	I								
		safe_mode	7									
AH17	NA	cam_d1	0	I	L	L	7	vdds	Yes	NA	PU/PD	LVCMOS
		gpio_100	4	I								
		safe_mode	7									
B24	NA	cam_d2	0	I	L	L	7	vdds	Yes	8	PU/ PD	LVCMOS
		gpio_101	4	IO								
		hw_dbg4	5	O								
		safe_mode	7									
C24	NA	cam_d3	0	I	L	L	7	vdds	Yes	8	PU/ PD	LVCMOS
		gpio_102	4	IO								
		hw_dbg5	5	O								
		safe_mode	7									
D24	NA	cam_d4	0	I	L	L	7	vdds	Yes	8	PU/ PD	LVCMOS
		gpio_103	4	IO								
		hw_dbg6	5	O								
		safe_mode	7									
A25	NA	cam_d5	0	I	L	L	7	vdds	Yes	8	PU/ PD	LVCMOS
		gpio_104	4	IO								

Copyright © 2010–2011, Texas Instruments Incorporated

Table 2-1. Ball Characteristics (CBP Pkg.)[3] (continued)

BALL BOTTOM [1]	BALL TOP [1]	PIN NAME [2]	MODE [3]	TYPE [4]	BALL RESET STATE [5]	BALL RESET REL. STATE [6]	RESET REL. MODE [7]	POWER [8]	HYS [9]	BUFFER STRENGTH (mA) [10]	PULLUP /DOWN TYPE [11]	IO CELL [12]
		hw_dbg7	5	O								
		safe_mode	7									
K28	NA	cam_d6	0	I	L	L	7	vdds	Yes	NA	PU/ PD	LVCMOS
		gpio_105	4	I								
		safe_mode	7									
L28	NA	cam_d7	0	I	L	L	7	vdds	Yes	NA	PU/ PD	LVCMOS
		gpio_106	4	I								
		safe_mode	7									
K27	NA	cam_d8	0	I	L	L	7	vdds	Yes	NA	PU/ PD	LVCMOS
		gpio_107	4	I								
		safe_mode	7									
L27	NA	cam_d9	0	I	L	L	7	vdds	Yes	NA	PU/ PD	LVCMOS
		gpio_108	4	I								
		safe_mode	7									
B25	NA	cam_d10	0	I	L	L	7	vdds	Yes	8	PU/ PD	LVCMOS
		gpio_109	4	IO								
		hw_dbg8	5	O								
		safe_mode	7									
C26	NA	cam_d11	0	I	L	L	7	vdds	Yes	8	PU/ PD	LVCMOS
		gpio_110	4	IO								
		hw_dbg9	5	O								
		safe_mode	7									
B26	NA	cam_xclkb	0	O	L	L	7	vdds	Yes	4	PU/ PD	LVCMOS
		gpio_111	4	IO								
		safe_mode	7									
B23	NA	cam_wen	0	I	L	L	7	vdds	Yes	4	PU/ PD	LVCMOS
		cam_shutter	2	O								
		gpio_167	4	IO								
		hw_dbg10	5	O								
		safe_mode	7									
D25	NA	cam_strobe	0	O	L	L	7	vdds	Yes	4	PU/ PD	LVCMOS
		gpio_126	4	IO								
		hw_dbg11	5	O								
		safe_mode	7									
AG19	NA	gpio_112	4	I	L	L	7	vdds	Yes	NA	PU/PD	LVCMOS
		safe_mode	7									
AH19	NA	gpio_113	4	I	L	L	7	vdds	Yes	NA	PU/PD	LVCMOS
		safe_mode	7									
AG18	NA	gpio_114	4	I	L	L	7	vdds	Yes	NA	PU/PD	LVCMOS
		safe_mode	7	-								
AH18	NA	gpio_115	4	I	L	L	7	vdds	Yes	NA	PU/PD	LVCMOS
		safe_mode	7	-								
P21	NA	mcbsp2_fsx	0	IO	L	L	7	vdds	Yes	4	PU/ PD	LVCMOS
		gpio_116	4	IO								
		safe_mode	7									
N21	NA	mcbsp2_clkx	0	IO	L	L	7	vdds	Yes	4	PU/ PD	LVCMOS
		gpio_117	4	IO								
		safe_mode	7									
R21	NA	mcbsp2_dr	0	I	L	L	7	vdds	Yes	4	PU/ PD	LVCMOS
		gpio_118	4	IO								
		safe_mode	7									
M21	NA	mcbsp2_dx	0	IO	L	L	7	vdds	Yes	4	PU/ PD	LVCMOS
		gpio_119	4	IO								
		safe_mode	7									

Copyright © 2010–2011, Texas Instruments Incorporated

Table 2-1. Ball Characteristics (CBP Pkg.)[3] (continued)

BALL BOTTOM [1]	BALL TOP [1]	PIN NAME [2]	MODE [3]	TYPE [4]	BALL RESET STATE [5]	BALL RESET REL. STATE [6]	RESET REL. MODE [7]	POWER [8]	HYS [9]	BUFFER STRENGTH (mA) [10]	PULLUP /DOWN TYPE [11]	IO CELL [12]
N28	NA	mmc1_clk	0	O	L	L	7	vdds_mmc1[15]	Yes	1	PU/ PD[5]	LVCMOS
		gpio_120 [1]	4	IO								
		safe_mode	7									
M27	NA	mmc1_cmd	0	IO	L	L	7	vdds_mmc1[15]	Yes	1	PU/ PD[5]	LVCMOS
		gpio_121 [1]	4	IO								
		safe_mode	7									
N27	NA	mmc1_dat0	0	IO	L	L	7	vdds_mmc1[15]	Yes	1	PU/ PD [5]	LVCMOS
		gpio_122 [1]	4	IO								
		safe_mode	7									
N26	NA	mmc1_dat1	0	IO	L	L	7	vdds_mmc1[15]	Yes	1	PU/ PD[5]	LVCMOS
		gpio_123[1]	4	IO								
		safe_mode	7									
N25	NA	mmc1_dat2	0	IO	L	L	7	vdds_mmc1[15]	Yes	1	PU/ PD [5]	LVCMOS
		gpio_124[1]	4	IO								
		safe_mode	7									
P28	NA	mmc1_dat3	0	IO	L	L	7	vdds_mmc1[15]	Yes	1	PU/ PD [5]	LVCMOS
		gpio_125[1]	4	IO								
		safe_mode	7									
P27	NA	gpio_126[1]	4	IO	L	L	7	vdds_x	Yes	1	PU/ PD [5]	LVCMOS
		safe_mode	7									
P26	NA	gpio_127[1]	4	IO	L	L	7	vdds_x	Yes	1	PU/ PD[5]	LVCMOS
		safe_mode	7									
R27	NA	gpio_128	4	IO	L	L	7	vdds	Yes	4	PU/ PD	LVCMOS
		safe_mode	7									
R25	NA	gpio_129[1]	4	IO	L	L	7	vdds_x	Yes	1	PU/ PD[5]	LVCMOS
		safe_mode	7									
AE2	NA	mmc2_clk	0	O	L	L	7	vdds	Yes	4	PU/ PD	LVCMOS
		mcspi3_clk	1	IO								
		gpio_130	4	IO								
		safe_mode	7									
AG5	NA	mmc2_cmd	0	IO	H	H	7	vdds	Yes	4	PU/ PD	LVCMOS
		mcspi3_simo	1	IO								
		gpio_131	4	IO								
		safe_mode	7									
AH5	NA	mmc2_dat0	0	IO	H	H	7	vdds	Yes	4	PU/ PD	LVCMOS
		mcspi3_somi	1	IO								
		gpio_132	4	IO								
		safe_mode	7									
AH4	NA	mmc2_dat1	0	IO	H	H	7	vdds	Yes	4	PU/ PD	LVCMOS
		gpio_133	4	IO								
		safe_mode	7									
AG4	NA	mmc2_dat2	0	IO	H	H	7	vdds	Yes	4	PU/ PD	LVCMOS
		mcspi3_cs1	1	O								
		gpio_134	4	IO								
		safe_mode	7									
AF4	NA	mmc2_dat3	0	IO	H	H	7	vdds	Yes	4	PU/ PD	LVCMOS
		mcspi3_cs0	1	IO								
		gpio_135	4	IO								
		safe_mode	7									
AE4	NA	mmc2_dat4	0	IO	L	L	7	vdds	Yes	4	PU/ PD	LVCMOS

Copyright © 2010–2011, Texas Instruments Incorporated

Table 2-1. Ball Characteristics (CBP Pkg.)[3] (continued)

BALL BOTTOM [1]	BALL TOP [1]	PIN NAME [2]	MODE [3]	TYPE [4]	BALL RESET STATE [5]	BALL RESET REL. STATE [6]	RESET REL. MODE [7]	POWER [8]	HYS [9]	BUFFER STRENGTH (mA) [10]	PULLUP /DOWN TYPE [11]	IO CELL [12]
		mmc2_dir_dat0	1	O								
		mmc3_dat0	3	IO								
		gpio_136	4	IO								
		safe_mode	7									
AH3	NA	mmc2_dat5	0	IO	L	L	7	vdds	Yes	4	PU/ PD	LVCMOS
		mmc2_dir_dat1	1	O								
		cam_global_reset	2	IO								
		mmc3_dat1	3	IO								
		gpio_137	4	IO								
		mm3_rxdp	6	IO								
		safe_mode	7									
AF3	NA	mmc2_dat6	0	IO	L	L	7	vdds	Yes	4	PU/ PD	LVCMOS
		mmc2_dir_cmd	1	O								
		cam_shutter	2	O								
		mmc3_dat2	3	IO								
		gpio_138	4	IO								
		safe_mode	7									
AE3	NA	mmc2_dat7	0	IO	L	L	7	vdds	Yes	4	PU/ PD	LVCMOS
		mmc2_clkin	1	I								
		mmc3_dat3	3	IO								
		gpio_139	4	IO								
		mm3_rxdm	6	IO								
		safe_mode	7									
AF6	NA	mcbsp3_dx	0	IO	L	L	7	vdds	Yes	4	PU/ PD	LVCMOS
		uart2_cts	1	I								
		gpio_140	4	IO								
		safe_mode	7									
AE6	NA	mcbsp3_dr	0	I	L	L	7	vdds	Yes	4	PU/ PD	LVCMOS
		uart2_rts	1	O								
		gpio_141	4	IO								
		safe_mode	7									
AF5	NA	mcbsp3_clkx	0	IO	L	L	7	vdds	Yes	4	PU/ PD	LVCMOS
		uart2_tx	1	O								
		gpio_142	4	IO								
		safe_mode	7									
AE5	NA	mcbsp3_fsx	0	IO	L	L	7	vdds	Yes	4	PU/ PD	LVCMOS
		uart2_rx	1	I								
		gpio_143	4	IO								
		safe_mode	7									
AB26	NA	uart2_cts	0	I	H	H	7	vdds	Yes	4	PU/ PD	LVCMOS
		mcbsp3_dx	1	IO								
		gpt_9_pwm_evt	2	IO								
		gpio_144	4	IO								
		safe_mode	7									
AB25	NA	uart2_rts	0	O	H	H	7	vdds	Yes	4	PU/ PD	LVCMOS
		mcbsp3_dr	1	I								
		gpt_10_pwm_evt	2	IO								
		gpio_145	4	IO								
		safe_mode	7									
AA25	NA	uart2_tx	0	O	H	H	7	vdds	Yes	4	PU/ PD	LVCMOS
		mcbsp3_clkx	1	IO								
		gpt_11_pwm_evt	2	IO								
		gpio_146	4	IO								
		safe_mode	7									

Copyright © 2010–2011, Texas Instruments Incorporated

Table 2-1. Ball Characteristics (CBP Pkg.)[3] (continued)

BALL BOTTOM [1]	BALL TOP [1]	PIN NAME [2]	MODE [3]	TYPE [4]	BALL RESET STATE [5]	BALL RESET REL. STATE [6]	RESET REL. MODE [7]	POWER [8]	HYS [9]	BUFFER STRENGTH (mA) [10]	PULLUP /DOWN TYPE [11]	IO CELL [12]
AD25	NA	uart2_rx	0	I	H	H	7	vdds	Yes	4	PU/ PD	LVCMOS
		mcbsp3_fsx	1	IO								
		gpt_8_pwm_evt	2	IO								
		gpio_147	4	IO								
		safe_mode	7									
AA8	NA	uart1_tx	0	O	L	L	7	vdds	Yes	4	PU/ PD	LVCMOS
		gpio_148	4	IO								
		safe_mode	7									
AA9	NA	uart1_rts	0	O	L	L	7	vdds	Yes	4	PU/ PD	LVCMOS
		gpio_149	4	IO								
		safe_mode	7									
W8	NA	uart1_cts	0	I	L	L	7	vdds	Yes	4	PU/ PD	LVCMOS
		gpio_150	4	IO								
		safe_mode	7									
Y8	NA	uart1_rx	0	I	L	L	7	vdds	Yes	4	PU/ PD	LVCMOS
		mcbsp1_clkr	2	IO								
		mcspi4_clk	3	IO								
		gpio_151	4	IO								
		safe_mode	7									
AE1	NA	mcbsp4_clkx	0	IO	L	L	7	vdds	Yes	4	PU/ PD	LVCMOS
		gpio_152	4	IO								
		mm3_txse0	6	IO								
		safe_mode	7									
AD1	NA	mcbsp4_dr	0	I	L	L	7	vdds	Yes	4	PU/ PD	LVCMOS
		gpio_153	4	IO								
		mm3_rxrcv	6	IO								
		safe_mode	7									
AD2	NA	mcbsp4_dx	0	IO	L	L	7	vdds	Yes	4	PU/ PD	LVCMOS
		gpio_154	4	IO								
		mm3_txdat	6	IO								
		safe_mode	7									
AC1	NA	mcbsp4_fsx	0	IO	L	L	7	vdds	Yes	4	PU/ PD	LVCMOS
		gpio_155	4	IO								
		mm3_txen_n	6	IO								
		safe_mode	7									
Y21	NA	mcbsp1_clkr	0	IO	L	L	7	vdds	Yes	4	PU/ PD	LVCMOS
		mcspi4_clk	1	IO								
		gpio_156	4	IO								
		safe_mode	7									
AA21	NA	mcbsp1_fsr	0	IO	L	L	7	vdds	Yes	4	PU/ PD	LVCMOS
		cam_global_reset	2	IO								
		gpio_157	4	IO								
		safe_mode	7									
V21	NA	mcbsp1_dx	0	IO	L	L	7	vdds	Yes	4	PU/ PD	LVCMOS
		mcspi4_simo	1	IO								
		mcbsp3_dx	2	IO								
		gpio_158	4	IO								
		safe_mode	7									
U21	NA	mcbsp1_dr	0	I	L	L	7	vdds	Yes	4	PU/ PD	LVCMOS
		mcspi4_somi	1	IO								
		mcbsp3_dr	2	I								
		gpio_159	4	IO								
		safe_mode	7									
T21	NA	mcbsp_clks	0	I	L	L	7	vdds	Yes	4	PU/ PD	LVCMOS

Copyright © 2010–2011, Texas Instruments Incorporated

Table 2-1. Ball Characteristics (CBP Pkg.)[3] (continued)

BALL BOTTOM [1]	BALL TOP [1]	PIN NAME [2]	MODE [3]	TYPE [4]	BALL RESET STATE [5]	BALL RESET REL. STATE [6]	RESET REL. MODE [7]	POWER [8]	HYS [9]	BUFFER STRENGTH (mA) [10]	PULLUP /DOWN TYPE [11]	IO CELL [12]
		cam_shutter	2	O								
		gpio_160	4	IO								
		uart1_cts	5	I								
		safe_mode	7									
K26	NA	mcbsp1_fsx	0	IO	L	L	7	vdds	Yes	4	PU/ PD	LVCMOS
		mcspi4_cs0	1	IO								
		mcbsp3_fsx	2	IO								
		gpio_161	4	IO								
		safe_mode	7									
W21	NA	mcbsp1_clkx	0	IO	L	L	7	vdds	Yes	4	PU/ PD	LVCMOS
		mcbsp3_clkx	2	IO								
		gpio_162	4	IO								
		safe_mode	7									
H18	NA	uart3_cts_rctx	0	IO	H	H	7	vdds	Yes	4	PU/ PD	LVCMOS
		gpio_163	4	IO								
		safe_mode	7									
H19	NA	uart3_rts_sd	0	O	H	H	7	vdds	Yes	4	PU/ PD	LVCMOS
		gpio_164	4	IO								
		safe_mode	7									
H20	NA	uart3_rx_irrx	0	I	H	H	7	vdds	Yes	4	PU/ PD	LVCMOS
		gpio_165	4	IO								
		safe_mode	7									
H21	NA	uart3_tx_irtx	0	O	H	H	7	vdds	Yes	4	PU/ PD	LVCMOS
		gpio_166	4	IO								
		safe_mode	7									
T28	NA	hsusb0_clk	0	I	L	L	7	vdds	Yes	8	PU/ PD	LVCMOS
		gpio_120	4	IO								
		safe_mode	7									
T25	NA	hsusb0_stp	0	O	H	H	7	vdds	Yes	4	PU/ PD	LVCMOS
		gpio_121	4	IO								
		safe_mode	7									
R28	NA	hsusb0_dir	0	I	L	L	7	vdds	Yes	4	PU/ PD	LVCMOS
		gpio_122	4	IO								
		safe_mode	7									
T26	NA	hsusb0_nxt	0	I	L	L	7	vdds	Yes	4	PU/ PD	LVCMOS
		gpio_124	4	IO								
		safe_mode	7									
T27	NA	hsusb0_data0	0	IO	L	L	7	vdds	Yes	4	PU/ PD	LVCMOS
		uart3_tx_irtx	2	O								
		gpio_125	4	IO								
		uart2_tx	5	O								
		safe_mode	7									
U28	NA	hsusb0_data1	0	IO	L	L	7	vdds	Yes	4	PU/ PD	LVCMOS
		uart3_rx_irrx	2	I								
		gpio_130	4	IO								
		uart2_rx	5	I								
		safe_mode	7									
U27	NA	hsusb0_data2	0	IO	L	L	7	vdds	Yes	4	PU/ PD	LVCMOS
		uart3_rts_sd	2	O								
		gpio_131	4	IO								
		uart2_rts	5	O								
		safe_mode	7									
U26	NA	hsusb0_data3	0	IO	L	L	7	vdds	Yes	4	PU/ PD	LVCMOS
		uart3_cts_rctx	2	IO								

Copyright © 2010–2011, Texas Instruments Incorporated

Table 2-1. Ball Characteristics (CBP Pkg.)[3] (continued)

BALL BOTTOM [1]	BALL TOP [1]	PIN NAME [2]	MODE [3]	TYPE [4]	BALL RESET STATE [5]	BALL RESET REL. STATE [6]	RESET REL. MODE [7]	POWER [8]	HYS [9]	BUFFER STRENGTH (mA) [10]	PULLUP /DOWN TYPE [11]	IO CELL [12]
		gpio_169	4	IO								
		uart2_cts	5	I								
		safe_mode	7									
U25	NA	hsusb0_data4	0	IO	L	L	7	vdds	Yes	4	PU/ PD	LVCMOS
		gpio_188	4	IO								
		safe_mode	7									
V28	NA	hsusb0_data5	0	IO	L	L	7	vdds	Yes	4	PU/ PD	LVCMOS
		gpio_189	4	IO								
		safe_mode	7									
V27	NA	hsusb0_data6	0	IO	L	L	7	vdds	Yes	4	PU/ PD	LVCMOS
		gpio_190	4	IO								
		safe_mode	7									
V26	NA	hsusb0_data7	0	IO	L	L	7	vdds	Yes	4	PU/ PD	LVCMOS
		gpio_191	4	IO								
		safe_mode	7									
K21	NA	i2c1_scl	0	OD	H	H	0	vdds	NA	3	PU/ PD[6][7]	Open Drain
J21	NA	i2c1_sda	0	IOD	H	H	0	vdds	Yes	3	PU/ PD[6][7]	Open Drain
AF15	NA	i2c2_scl	0	OD	H	H	7	vdds	Yes	3	PU/ PD[6] [8]	Open Drain
		gpio_168	4	IO						4		
		safe_mode	7									
AE15	NA	i2c2_sda	0	IOD	H	H	7	vdds	Yes	3	PU/ PD[6] [8]	Open Drain
		gpio_183	4	IO						4		
		safe_mode	7									
AF14	NA	i2c3_scl	0	OD	H	H	7	vdds	Yes	3	PU/ PD[6] [8]	Open Drain
		gpio_184	4	IO						4		
		safe_mode	7									
AG14	NA	i2c3_sda	0	IOD	H	H	7	vdds	Yes	3	PU/ PD[6] [8]	Open Drain
		gpio_185	4	IO						4		
		safe_mode	7									
AD26	NA	i2c4_scl	0	OD	H	H	0	vdds	Yes	3	PU/ PD[6][7]	Open Drain
		sys_ nvmode1	1	O						4		
		safe_mode	7									
AE26	NA	i2c4_sda	0	IOD	H	H	0	vdds	Yes	3	PU/ PD[6][7]	Open Drain
		sys_ nvmode2	1	O						4		
		safe_mode	7									
J25	NA	hdq_sio	0	IOD	H	H	7	vdds	Yes	4	PU/ PD	LVCMOS
		sys_altclk	1	I								
		i2c2_sccbe	2	OD								
		i2c3_sccbe	3	OD								
		gpio_170	4	IO								
		safe_mode	7									
AB3	NA	mcspi1_clk	0	IO	L	L	7	vdds	Yes	4	PU/ PD	LVCMOS
		mmc2_dat4	1	IO								
		gpio_171	4	IO								
		safe_mode	7									
AB4	NA	mcspi1_ simo	0	IO	L	L	7	vdds	Yes	4	PU/ PD	LVCMOS
		mmc2_dat5	1	IO								
		gpio_172	4	IO								
		safe_mode	7									
AA4	NA	mcspi1_ somi	0	IO	L	L	7	vdds	Yes	4	PU/ PD	LVCMOS
		mmc2_dat6	1	IO								
		gpio_173	4	IO								
		safe_mode	7									
AC2	NA	mcspi1_cs0	0	IO	H	H	7	vdds	Yes	4	PU/ PD	LVCMOS

Copyright © 2010–2011, Texas Instruments Incorporated

Table 2-1. Ball Characteristics (CBP Pkg.)[3] (continued)

BALL BOTTOM [1]	BALL TOP [1]	PIN NAME [2]	MODE [3]	TYPE [4]	BALL RESET STATE [5]	BALL RESET REL. STATE [6]	RESET REL. MODE [7]	POWER [8]	HYS [9]	BUFFER STRENGTH (mA) [10]	PULLUP /DOWN TYPE [11]	IO CELL [12]
		mmc2_dat7	1	IO								
		gpio_174	4	IO								
		safe_mode	7									
AC3	NA	mcspi1_cs1	0	O	H	H	7	vdds	Yes	4	PU/ PD	LVCMOS
		mmc3_cmd	3	IO								
		gpio_175	4	IO								
		safe_mode	7									
AB1	NA	mcspi1_cs2	0	O	H	H	7	vdds	Yes	4	PU/ PD	LVCMOS
		mmc3_clk	3	O								
		gpio_176	4	IO								
		safe_mode	7									
AB2	NA	mcspi1_cs3	0	O	H	H	7	vdds	Yes	4	PU/ PD	LVCMOS
		hsusb2_ data2	3	IO								
		gpio_177	4	IO								
		mm2_txdat	5	IO								
		safe_mode	7									
AA3	NA	mcspi2_clk	0	IO	L	L	7	vdds	Yes	4	PU/ PD	LVCMOS
		hsusb2_ data7	3	IO								
		gpio_178	4	IO								
		safe_mode	7									
Y2	NA	mcspi2_ simo	0	IO	L	L	7	vdds	Yes	4	PU/ PD	LVCMOS
		gpt_9_pwm_evt	1	IO								
		hsusb2_ data4	3	IO								
		gpio_179	4	IO								
		safe_mode	7									
Y3	NA	mcspi2_ somi	0	IO	L	L	7	vdds	Yes	4	PU/ PD	LVCMOS
		gpt_10_pwm_evt	1	IO								
		hsusb2_ data5	3	IO								
		gpio_180	4	IO								
		safe_mode	7									
Y4	NA	mcspi2_cs0	0	IO	H	H	7	vdds	Yes	4	PU/ PD	LVCMOS
		gpt_11_pwm_evt	1	IO								
		hsusb2_ data6	3	IO								
		gpio_181	4	IO								
		safe_mode	7									
V3	NA	mcspi2_cs1	0	O	L	L	7	vdds	Yes	4	PU/ PD	LVCMOS
		gpt_8_pwm_evt	1	IO								
		hsusb2_ data3	3	IO								
		gpio_182	4	IO								
		mm2_txen_n	5	IO								
		safe_mode	7									
AE25	NA	sys_32k	0	I	Z	Z	0	vdds	Yes	NA	PU/ PD	LVCMOS
AE17	NA	sys_xtalin	0	AI	Z	Z	0	vdds	Yes	NA	No	LVCMOS Analog
AF17	NA	sys_xtalout	0	AO	Z	0	0	vdds	NA	NA	NA	LVCMOS Analog
AF25	NA	sys_clkreq	0	IO	0	See [11]	0	vdds	Yes	4	PU/ PD	LVCMOS
		gpio_1	4	IO								
		safe_mode	7									
AF26	NA	sys_nirq	0	I	H	H	7	vdds	Yes	4	PU/ PD	LVCMOS
		gpio_0	4	IO								
		safe_mode	7									
AH25	NA	sys_nrespwron	0	I	Z	Z	0	vdds	Yes	NA	No	LVCMOS
AF24	NA	sys_nreswarm	0	IOD	0	H	0	vdds	Yes	4	PU/ PD	LVCMOS
		gpio_30	4	IO								Open Drain

Copyright © 2010–2011, Texas Instruments Incorporated

Table 2-1. Ball Characteristics (CBP Pkg.)[3] (continued)

BALL BOTTOM [1]	BALL TOP [1]	PIN NAME [2]	MODE [3]	TYPE [4]	BALL RESET STATE [5]	BALL RESET REL. STATE [6]	RESET REL. MODE [7]	POWER [8]	HYS [9]	BUFFER STRENGTH (mA) [10]	PULLUP /DOWN TYPE [11]	IO CELL [12]
		safe_mode	7									
AH26	NA	sys_boot0	0	I	Z	Z	0	vdds	Yes	8	PU/ PD	LVCMOS
		dss_data18	3	IO								
		gpio_2	4	IO								
		safe_mode	7									
AG26	NA	sys_boot1	0	I	Z	Z	0	vdds	Yes	8	PU/ PD	LVCMOS
		dss_data19	3	IO								
		gpio_3	4	IO								
		safe_mode	7									
AE14	NA	sys_boot2	0	I	Z	Z	0	vdds	Yes	8	PU/ PD	LVCMOS
		gpio_4	4	IO								
		safe_mode	7									
AF18	NA	sys_boot3	0	I	Z	Z	0	vdds	Yes	8	PU/ PD	LVCMOS
		dss_data20	3	O								
		gpio_5	4	IO								
		safe_mode	7									
AF19	NA	sys_boot4	0	I	Z	Z	0	vdds	Yes	8	PU/ PD	LVCMOS
		mmc2_dir_dat2	1	O								
		dss_data21	3	O								
		gpio_6	4	IO								
		safe_mode	7									
AE21	NA	sys_boot5	0	I	Z	Z	0	vdds	Yes	8	PU/ PD	LVCMOS
		mmc2_dir_dat3	1	O								
		dss_data22	3	O								
		gpio_7	4	IO								
		safe_mode	7									
AF21	NA	sys_boot6	0	I	Z	Z	0	vdds	Yes	8	PU/ PD	LVCMOS
		dss_data23	3	O								
		gpio_8	4	IO								
		safe_mode	7									
AF22	NA	sys_off_mode	0	O	0	L	7	vdds	Yes	4	PU/ PD	LVCMOS
		gpio_9	4	IO								
		safe_mode	7									
AG25	NA	sys_clkout1	0	O	L	L	7[14]	vdds	Yes	4	PU/ PD	LVCMOS
		gpio_10	4	IO								
		safe_mode	7									
AE22	NA	sys_clkout2	0	O	L	L	7	vdds	Yes	4	PU/ PD	LVCMOS
		gpio_186	4	IO								
		safe_mode	7									
AA17	NA	jtag_ntrst	0	I	L	L	0	vdds	Yes	NA	PU/ PD	LVCMOS
AA13	NA	jtag_tck	0	I	L	L	0	vdds	Yes	NA	PU/ PD	LVCMOS
AA12	NA	jtag_rtck	0	O	L	0	0	vdds	NA	4	PU/ PD	LVCMOS
AA18	NA	jtag_tms_tmsc	0	IO	H	H	0	vdds	Yes	4	PU/ PD	LVCMOS
AA20	NA	jtag_tdi	0	I	H	H	0	vdds	Yes	NA	PU/ PD	LVCMOS
AA19	NA	jtag_tdo	0	O	L	Z	0	vdds	NA	4	PU/ PD	LVCMOS
AA11	NA	jtag_emu0	0	IO	H	H	0	vdds	Yes	4	PU/ PD	LVCMOS
		gpio_11	4	IO								
		safe_mode	7									
AA10	NA	jtag_emu1	0	IO	H	H	0	vdds	Yes	4	PU/ PD	LVCMOS
		gpio_31	4	IO								
		safe_mode	7									
AF10	NA	etk_clk	0	O	H	H	4	vdds	Yes	4	PU/ PD	LVCMOS
		mcbsp5_ clkx	1	IO								
		mmc3_clk	2	O								

Copyright © 2010–2011, Texas Instruments Incorporated

Table 2-1. Ball Characteristics (CBP Pkg.)[3] (continued)

BALL BOTTOM [1]	BALL TOP [1]	PIN NAME [2]	MODE [3]	TYPE [4]	BALL RESET STATE [5]	BALL RESET REL. STATE [6]	RESET REL. MODE [7]	POWER [8]	HYS [9]	BUFFER STRENGTH (mA) [10]	PULLUP /DOWN TYPE [11]	IO CELL [12]
		hsusb1_stp	3	O								
		gpio_12	4	IO								
		mm1_rxdp	5	IO								
		hw_dbg0	7	O								
AE10	NA	etk_ctl	0	O	H	H	4	vdds	Yes	4	PU/ PD	LVCMOS
		mmc3_cmd	2	IO								
		hsusb1_clk	3	O								
		gpio_13	4	IO								
		hw_dbg1	7	O								
AF11	NA	etk_d0	0	O	H	H	4	vdds	Yes	4	PU/ PD	LVCMOS
		mcspi3_ simo	1	IO								
		mmc3_dat4	2	IO								
		hsusb1_ data0	3	IO								
		gpio_14	4	IO								
		mm1_rxrcv	5	IO								
		hw_dbg2	7	O								
AG12	NA	etk_d1	0	O	H	H	4	vdds	Yes	4	PU/ PD	LVCMOS
		mcspi3_ somi	1	IO								
		hsusb1_ data1	3	IO								
		gpio_15	4	IO								
		mm1_txse0	5	IO								
		hw_dbg3	7	O								
AH12	NA	etk_d2	0	O	H	H	4	vdds	Yes	4	PU/ PD	LVCMOS
		mcspi3_cs0	1	IO								
		hsusb1_ data2	3	IO								
		gpio_16	4	IO								
		mm1_txdat	5	IO								
		hw_dbg4	7	O								
AE13	NA	etk_d3	0	O	H	H	4	vdds	Yes	4	PU/ PD	LVCMOS
		mcspi3_clk	1	IO								
		mmc3_dat3	2	IO								
		hsusb1_ data7	3	IO								
		gpio_17	4	IO								
		hw_dbg5	7	O								
AE11	NA	etk_d4	0	O	L	L	4	vdds	Yes	4	PU/ PD	LVCMOS
		mcbsp5_dr	1	I								
		mmc3_dat0	2	IO								
		hsusb1_ data4	3	IO								
		gpio_18	4	IO								
		hw_dbg6	7	O								
AH9	NA	etk_d5	0	O	L	L	4	vdds	Yes	4	PU/ PD	LVCMOS
		mcbsp5_fsx	1	IO								
		mmc3_dat1	2	IO								
		hsusb1_ data5	3	IO								
		gpio_19	4	IO								
		hw_dbg7	7	O								
AF13	NA	etk_d6	0	O	L	L	4	vdds	Yes	4	PU/ PD	LVCMOS
		mcbsp5_dx	1	O								
		mmc3_dat2	2	IO								
		hsusb1_ data6	3	IO								
		gpio_20	4	IO								
		hw_dbg8	7	O								
AH14	NA	etk_d7	0	O	L	L	4	vdds	Yes	4	PU/ PD	LVCMOS
		mcspi3_cs1	1	O								

Copyright © 2010–2011, Texas Instruments Incorporated

Table 2-1. Ball Characteristics (CBP Pkg.)[3] (continued)

BALL BOTTOM [1]	BALL TOP [1]	PIN NAME [2]	MODE [3]	TYPE [4]	BALL RESET STATE [5]	BALL RESET REL. STATE [6]	RESET REL. MODE [7]	POWER [8]	HYS [9]	BUFFER STRENGTH (mA) [10]	PULLUP /DOWN TYPE [11]	IO CELL [12]
		mmc3_dat7	2	IO								
		hsusb1_ data3	3	IO								
		gpio_21	4	IO								
		mm1_txen_n	5	IO								
		hw_dbg9	7	O								
AF9	NA	etk_d8	0	O	L	L	4	vdds	Yes	4	PU/ PD	LVCMOS
		mmc3_dat6	2	IO								
		hsusb1_dir	3	I								
		gpio_22	4	IO								
		hw_dbg10	7	O								
AG9	NA	etk_d9	0	O	L	L	4	vdds	Yes	4	PU/ PD	LVCMOS
		mmc3_dat5	2	IO								
		hsusb1_nxt	3	I								
		gpio_23	4	IO								
		mm1_rxdm	5	IO								
		hw_dbg11	7	O								
AE7	NA	etk_d10	0	O	L	L	4	vdds	Yes	4	PU/ PD	LVCMOS
		uart1_rx	2	I								
		hsusb2_clk	3	O								
		gpio_24	4	IO								
		hw_dbg12	7	O								
AF7	NA	etk_d11	0	O	L	L	4	vdds	Yes	4	PU/ PD	LVCMOS
		hsusb2_stp	3	O								
		gpio_25	4	IO								
		mm2_rxdp	5	IO								
		hw_dbg13	7	O								
AG7	NA	etk_d12	0	O	L	L	4	vdds	Yes	4	PU/ PD	LVCMOS
		hsusb2_dir	3	I								
		gpio_26	4	IO								
		hw_dbg14	7	O								
AH7	NA	etk_d13	0	O	L	L	4	vdds	Yes	4	PU/ PD	LVCMOS
		hsusb2_nxt	3	I								
		gpio_27	4	IO								
		mm2_rxdm	5	IO								
		hw_dbg15	7	O								
AG8	NA	etk_d14	0	O	L	L	4	vdds	Yes	4	PU/ PD	LVCMOS
		hsusb2_ data0	3	IO								
		gpio_28	4	IO								
		mm2_rxrcv	5	IO								
		hw_dbg16	7	O								
AH8	NA	etk_d15	0	O	L	L	4	vdds	Yes	4	PU/ PD	LVCMOS
		hsusb2_ data1	3	IO								
		gpio_29	4	IO								
		mm2_txse0	5	IO								
		hw_dbg17	7	O								
AH21	NA	vss	0	GND	-	-	-	-	-	-	-	-
AG16	NA	vss	0	GND	-	-	-	-	-	-	-	-
M28	NA	vss	0	GND	-	-	-	-	-	-	-	-
AH20	NA	cap_vddu_array	0	PWR	-	-	-	-	-	-	-	-
AG20	NA	vdds	0	PWR	-	-	-	-	-	-	-	-
AG21	NA	vdds	0	PWR	-	-	-	-	-	-	-	-
H28	NA	vdds	0	PWR	-	-	-	-	-	-	-	-
P25	NA	vdds_x	0	PWR	-	-	-	-	-	-	-	-

Copyright © 2010–2011, Texas Instruments Incorporated

Table 2-1. Ball Characteristics (CBP Pkg.)[3] (continued)

BALL BOTTOM [1]	BALL TOP [1]	PIN NAME [2]	MODE [3]	TYPE [4]	BALL RESET STATE [5]	BALL RESET REL. STATE [6]	RESET REL. MODE [7]	POWER [8]	HYS [9]	BUFFER STRENGTH (mA) [10]	PULLUP /DOWN TYPE [11]	IO CELL [12]
AE9, AE18, AE19, AE24, AC4, Y16, Y18, Y19, Y20, W18, W20, V20, U19, U20, T19, P20, N19, N20, M19, M25, L25, K18, K20, J4, J18, J19, J20, H4, E25, D8, D9, D15, D22, D23	NA	vdd_core	0	PWR	-	-	-	-	-	-	-	-
Y9, Y10, Y11, Y14, Y15, W9, W11, W12, W15, U10, T9, T10, R9, R10, N10, M9, M10, L9, L10, K11, K14, K13, J9, J10, J11, J14, J15	NA	vdd_mpu_iva	0	PWR	-	-	-	-	-	-	-	-
AH6, U1, R4, J1, J2, G28, F1, F2, D16, C16, C28, B5, B8, B12, B18, B22, A5, A8, A12, A18, A22	AC5, P1, H1, F23, E1, C23, A4, A7, A10, A15, A18	vdds_mem	0	PWR	-	-	-	-	-	-	-	-
AG27, AF8, AF16, AF23, AE8, AE16, AE23, AD3, AD4, W4, F25, F26	NA	vdds	0	PWR	-	-	-	-	-	-	-	-
W16	NA	vdds_sram	0	PWR								
K15	NA	vdda_dplls_dll	0	PWR	-	-	-	-	-	-	-	-
AA16	NA	vdda_dpll_per	0	PWR	-	-	-	-	-	-	-	-
AA14	NA	vdda_wkup_ bg_bb	0	PWR	-	-	-	-	-	-	-	-
K25	NA	vdds_mmc1	0	PWR	-	-	-	-	-	-	-	-
V25	NA	vdda_dac	0	PWR	-	-	-	-	-	-	-	-
Y26	NA	vssa_dac	0	GND	-	-	-	-	-	-	-	-

Copyright © 2010–2011, Texas Instruments Incorporated

Table 2-1. Ball Characteristics (CBP Pkg.)[3] (continued)

BALL BOTTOM [1]	BALL TOP [1]	PIN NAME [2]	MODE [3]	TYPE [4]	BALL RESET STATE [5]	BALL RESET REL. STATE [6]	RESET REL. MODE [7]	POWER [8]	HYS [9]	BUFFER STRENGTH (mA) [10]	PULLUP /DOWN TYPE [11]	IO CELL [12]
AG2, AG3, AG6, AF12, AF20, AE12, AE20, AC25, AC26, Y12, Y13, Y25, W3, W10, W13, W14, W17, W19, W25, V9, V10, V19, U2, U9, T20, R19, R20, R26, P3, P4, P9, P10, P19, N9, M20, L19, L20, L26, K9, K10, K12, K16, K17, K19, J3, J12, J13, J16, J17, G27, E3,E4, D7, D10, D13, D19, D21, C7, C10, C13, C19, C22, B2, B27, A3, A26	B4, B7, B10, B15, B18, C22, E2, F22, H2, P2, AB5, AB14, AB20	vss	0	GND	-	-	-	-	-	-	-	-
AA15	NA	cap_vddu_wkup_ logic	0	PWR	-	-	-	-	-	-	-	-
AH10, AH11, AH13, AH15, AH16, AG11, AG13, AF1, AF28, AE28, AA1, N1, M1, J28, A15, M2, N2, A1, A2, A27, A28, AG1, AG28, AH1, AH2, AH27, AH28, B1, B28, AA2, AF2, AF27, AG10, AG15, B15, J27, M26	A12, AA1, AA23, AB11, AB9, AC11, AC13, AC14, AC8, AC9, H23, K1, L1, U1, Y23, A1, A2, A22, A23, AB1, AB23, AC1, AC2, AC22, AC23, B1, B23, AA2, U2, AA22, AB8, AB13, B12, H22, K2, K22, L2	Feed-Through Pins[9]	-	-	-	-	-	-	-	-	-	-

Table 2-1. Ball Characteristics (CBP Pkg.)[3] (continued)

BALL BOTTOM [1]	BALL TOP [1]	PIN NAME [2]	MODE [3]	TYPE [4]	BALL RESET STATE [5]	BALL RESET REL. STATE [6]	RESET REL. MODE [7]	POWER [8]	HYS [9]	BUFFER STRENGTH (mA) [10]	PULLUP /DOWN TYPE [11]	IO CELL [12]
G1, A13, A14,A16, A17, B14, B16, B17, C14, C15, C17, D17, D18, H9, H10, H11, H12, H13, H14, H15, H16, H17, A4, A6, A7, A9, A10, A11, A19, A20, A21, B3, B4, B6, B7, B9, B10, B11, B13, B19, B20, B21, C1,C2, C3, C4,C5, C6, C8,C9, C11, C12, C18, C20, C21, D1, D2, D3, D4, D5,D6, D11, D12,D14, D20, E1,E2, AA26, AE27	AB2, AB22, B2, B22	No Connect[2]	-	-								
Y17	NA	sys_xtalgnd	0	GND								
U4	NA	cap_vdd_bb_ mpu_iva	0	PWR								
V4	NA	cap_vdd_sram _mpu_iva	0	PWR								
L21	NA	cap_vdd_sram_core	0	PWR								

(1) The usage of this GPIO is strongly restricted. For more information, see the GPIO chapter of the *AM/DM37x Multimedia Device Technical Reference Manual* (literature number SPRUGN4).

(2) Pins labeled as "No connect" must be left unconnected. Any connections to these pins may result in unpredictable behavior.

(3) NA in this table stands for "Not Applicable".

(4) The drive strength is fixed regardless of the load. The driver is designed to drive 75-ohm for video applications.

(5) PU = [50 to 100 kΩ] per default or [10 to 50 kΩ] according to the selected mode.
For a full description of the pull-up drive strength programming, see the PRG_SDMMC_PUSTRENGTH configuration register bit field in the System Control Module chapter of the *AM/DM37x Multimedia Device Technical Reference Manual* (literature number SPRUGN4).
PD: 30 to 150 kΩ.

(6) The pullup and pulldown can be either the standard LVCMOS 100-µA drive strength or the I2C pullup and pulldown described below: Nominal resistance = 1.66 kΩ in high-speed mode with a load range of 5 pF to 12 pF, 4.5 kΩ in standard / fast mode with a load range of 5 pF to 15 pF.

(7) The default buffer configuration is High-Speed I2C point-to-point mode using internal pullup. For a full description of the pull drive strength programming, see prg_i2c1_pullupresx, prg_i2c1_lb1lb0, and prg_sr_pullupresx, prg_sr_lb bits of the CONTROL_PROG_IO1, CONTROL_PROG_IO_WKUP1 control modules in the System Control Module / SCM Programming Model / Feature Settings section and the System Control Module chapter of the *AM/DM37x Multimedia Device Technical Reference Manual* (literature number SPRUGN4) to modify the IO settings if required by the targeted interface application.

(8) The default buffer configuration is standard LVCMOS mode (non-I2C). For a full description of the pull drive strength programming, see PADCONFS bits of CONTROL_PADCONF_X control modules (standard LVCMOS mode), or prg_i2c2_pullupresx, prg_i2c2_lb1lb0, and prg_i2c3_pullupresx, prg_i2c3_lb1lb0 bits of the CONTROL_PROG_IO2, CONTROL_PROG_IO3 control modules (I2C mode) in the System Control Module chapter of the *AM/DM37x Multimedia Device Technical Reference Manual* (literature number SPRUGN4) to modify the IO settings if required by the targeted interface application.

(9) These signals are feed-through balls. For more information, see Table 2-28.

(10) In buffer mode, the drive strength is fixed regardless of the load. The driver is designed to drive 75Ω for video applications. In bypass mode, the drive strength is 0.47 mA.

(11) Depending on the sys_clkreq direction the corresponding reset released state value can be:
- Z if sys_clkreq is used as input
- 1 if sys_clkreq is used as output

For a full description of the sys_clkreq control, see Power, Reset, and Clock Management chapter of the *AM/DM37x Multimedia Device Technical Reference Manual* (literature number SPRUGN4).

(12) The drive strength of these IOs is set according to the programmable load range: 2 pF to 4 pF per default or 4 pF to 12 pF. For a full description of the drive strength programming, see the System Control Module chapter of the *AM/DM37x Multimedia Device Technical*

Copyright © 2010–2011, Texas Instruments Incorporated

Reference Manual (literature number SPRUGN4).

(13) In the safe_mode_out1, the buffer is configured to drive 1.

(14) Mux0 if sys_boot6 is pulled down (clock master).

(15) If MMC1 functional signals are enabled, vdds_mmc1 for MMC1 must be supplied by a dedicated power source.
If MMC1 functional signals are disabled, other multiplexed CMOS signals of the interface can be enabled. The interface can be supplied by the same power source as vdds. The vdds power source supplies the vdds_mmc1 ball.
If neither MMC1 functional balls or CMOS signals are enabled, the interface balls are left unconnected with its associated power supply (vdda/vssa) grounded.
For the corresponding setting of the PBIASLITEPWRDNZ0 bit, see the System Control Module / SCM Programming Model / Extended-Drain I/Os and PBIAS Cells Programming Guide section of the *AM/DM37x Multimedia Device Technical Reference Manual* (literature number SPRUGN4).

Table 2-2. Ball Characteristics (CBC Pkg.)[5]

BALL BOTTOM [1]	BALL TOP [1]	PIN NAME [2]	MODE [3]	TYPE [4]	BALL RESET STATE [5]	BALL RESET REL. STATE [6]	RESET REL. MODE [7]	POWER [8]	HYS [9]	BUFFER STRENGTH (mA) [10]	PULLUP /DOWN TYPE [11]	IO CELL [12]
AE16	NA	cam_d0	0	I	L	L	7	vdda	Yes	NA	PU/ PD	LVCMOS
		gpio_99	4	I								
		safe_mode	7	-								
AE15	NA	cam_d1	0	I	L	L	7	vdda	Yes	NA	PU/ PD	LVCMOS
		gpio_100	4	I								
		safe_mode	7	-								
AD17	NA	gpio_112	4	I	L	L	7	vdda	Yes	NA	PU/ PD	LVCMOS
		safe_mode	7	-								
AE18	NA	gpio_114	4	I	L	L	7	vdda	Yes	NA	PU/ PD	LVCMOS
		safe_mode	7	-								
AD16	NA	gpio_113	4	I	L	L	7	vdda	Yes	NA	PU/ PD	LVCMOS
		safe_mode	7	-								
		gpio_115	4	I								
AE17	NA	safe_mode	7	-	L	L	7	vdda	Yes	NA	PU/ PD	LVCMOS
NA	G20	sdrc_a0	0	O	0	0	0	vdds	NA	4 (1)	PU/ PD	LVCMOS
NA	K20	sdrc_a1	0	O	0	0	0	vdds	NA	4(1)	PU/ PD	LVCMOS
NA	J20	sdrc_a2	0	O	0	0	0	vdds	NA	4 (1)	PU/ PD	LVCMOS
NA	J21	sdrc_a3	0	O	0	0	0	vdds	NA	4 (1)	PU/ PD	LVCMOS
NA	U21	sdrc_a4	0	O	0	0	0	vdds	NA	4 (1)	PU/ PD	LVCMOS
NA	R20	sdrc_a5	0	O	0	0	0	vdds	NA	4 (1)	PU/ PD	LVCMOS
NA	M21	sdrc_a6	0	O	0	0	0	vdds	NA	4 (1)	PU/ PD	LVCMOS
NA	M20	sdrc_a7	0	O	0	0	0	vdds	NA	4 (1)	PU/ PD	LVCMOS
NA	N20	sdrc_a8	0	O	0	0	0	vdds	NA	4 (1)	PU/ PD	LVCMOS
NA	K21	sdrc_a9	0	O	0	0	0	vdds	NA	4 (1)	PU/ PD	LVCMOS
NA	Y16	sdrc_a10	0	O	0	0	0	vdds	NA	4 (1)	PU/ PD	LVCMOS
NA	N21	sdrc_a11	0	O	0	0	0	vdds	NA	4(1)	PU/ PD	LVCMOS
NA	R21	sdrc_a12	0	O	0	0	0	vdds	NA	4 (1)	PU/ PD	LVCMOS
NA	AA15	sdrc_a13	0	O	0	0	0	vdds	NA	4 (1)	PU/ PD	LVCMOS
NA	Y12	sdrc_a14	0	O	0	0	0	vdds	NA	4 (1)	PU/ PD	LVCMOS
NA	AA18	sdrc_ba0	0	O	0	0	0	vdds	NA	4 (1)	PU/ PD	LVCMOS
NA	V20	sdrc_ba1	0	O	0	0	0	vdds	NA	4(1)	PU/ PD	LVCMOS
NA	Y15	sdrc_cke0	0	O	H	1	7	vdds	NA	4 (1)	PU/ PD	LVCMOS
		safe_mode_out1[6]	7									
NA	Y13	sdrc_cke1	0	O	H	1	7	vdds	NA	4 (1)	PU/ PD	LVCMOS
		safe_mode_out1[6]	7									
NA	A12	sdrc_clk	0	IO	L	0	0	vdds	Yes	4 (1)	PU/ PD	LVCMOS
NA	D1	sdrc_d0	0	IO	L	Z	0	vdds	Yes	4 (1)	PU/ PD	LVCMOS
NA	G1	sdrc_d1	0	IO	L	Z	0	vdds	Yes	4 (1)	PU/ PD	LVCMOS
NA	G2	sdrc_d2	0	IO	L	Z	0	vdds	Yes	4 (1)	PU/ PD	LVCMOS
NA	E1	sdrc_d3	0	IO	L	Z	0	vdds	Yes	4(1)	PU/ PD	LVCMOS
NA	D2	sdrc_d4	0	IO	L	Z	0	vdds	Yes	4 (1)	PU/ PD	LVCMOS
NA	E2	sdrc_d5	0	IO	L	Z	0	vdds	Yes	4 (1)	PU/ PD	LVCMOS
NA	B3	sdrc_d6	0	IO	L	Z	0	vdds	Yes	4 (1)	PU/ PD	LVCMOS

Copyright © 2010–2011, Texas Instruments Incorporated

Table 2-2. Ball Characteristics (CBC Pkg.)[5] (continued)

BALL BOTTOM [1]	BALL TOP [1]	PIN NAME [2]	MODE [3]	TYPE [4]	BALL RESET STATE [5]	BALL RESET REL. STATE [6]	RESET REL. MODE [7]	POWER [8]	HYS [9]	BUFFER STRENGTH (mA) [10]	PULLUP /DOWN TYPE [11]	IO CELL [12]
NA	B4	sdrc_d7	0	IO	L	Z	0	vdds	Yes	4 (1)	PU/ PD	LVCMOS
NA	A10	sdrc_d8	0	IO	L	Z	0	vdds	Yes	4 (1)	PU/ PD	LVCMOS
NA	B11	sdrc_d9	0	IO	L	Z	0	vdds	Yes	4 (1)	PU/ PD	LVCMOS
NA	A11	sdrc_d10	0	IO	L	Z	0	vdds	Yes	4 (1)	PU/ PD	LVCMOS
NA	B12	sdrc_d11	0	IO	L	Z	0	vdds	Yes	4(1)	PU/ PD	LVCMOS
NA	A16	sdrc_d12	0	IO	L	Z	0	vdds	Yes	4 (1)	PU/ PD	LVCMOS
NA	A17	sdrc_d13	0	IO	L	Z	0	vdds	Yes	4 (1)	PU/ PD	LVCMOS
NA	B17	sdrc_d14	0	IO	L	Z	0	vdds	Yes	4 (1)	PU/ PD	LVCMOS
NA	B18	sdrc_d15	0	IO	L	Z	0	vdds	Yes	4 (1)	PU/ PD	LVCMOS
NA	B7	sdrc_d16	0	IO	L	Z	0	vdds	Yes	4 (1)	PU/ PD	LVCMOS
NA	A5	sdrc_d17	0	IO	L	Z	0	vdds	Yes	4 (1)	PU/ PD	LVCMOS
NA	B6	sdrc_d18	0	IO	L	Z	0	vdds	Yes	4 (1)	PU/ PD	LVCMOS
NA	A6	sdrc_d19	0	IO	L	Z	0	vdds	Yes	4 (1)	PU/ PD	LVCMOS
NA	A8	sdrc_d20	0	IO	L	Z	0	vdds	Yes	4 (1)	PU/ PD	LVCMOS
NA	B9	sdrc_d21	0	IO	L	Z	0	vdds	Yes	4(1)	PU/ PD	LVCMOS
NA	A9	sdrc_d22	0	IO	L	Z	0	vdds	Yes	4 (1)	PU/ PD	LVCMOS
NA	B10	sdrc_d23	0	IO	L	Z	0	vdds	Yes	4 (1)	PU/ PD	LVCMOS
NA	C21	sdrc_d24	0	IO	L	Z	0	vdds	Yes	4 (1)	PU/ PD	LVCMOS
NA	D20	sdrc_d25	0	IO	L	Z	0	vdds	Yes	4 (1)	PU/ PD	LVCMOS
NA	B19	sdrc_d26	0	IO	L	Z	0	vdds	Yes	4 (1)	PU/ PD	LVCMOS
NA	C20	sdrc_d27	0	IO	L	Z	0	vdds	Yes	4 (1)	PU/ PD	LVCMOS
NA	D21	sdrc_d28	0	IO	L	Z	0	vdds	Yes	4(1)	PU/ PD	LVCMOS
NA	E20	sdrc_d29	0	IO	L	Z	0	vdds	Yes	4 (1)	PU/ PD	LVCMOS
NA	E21	sdrc_d30	0	IO	L	Z	0	vdds	Yes	4 (1)	PU/ PD	LVCMOS
NA	G21	sdrc_d31	0	IO	L	Z	0	vdds	Yes	4(1)	PU/ PD	LVCMOS
NA	H1	sdrc_dm0	0	O	0	0	0	vdds	NA	4 (1)	PU/ PD	LVCMOS
NA	A14	sdrc_dm1	0	O	0	0	0	vdds	NA	4 (1)	PU/ PD	LVCMOS
NA	A4	sdrc_dm2	0	O	0	0	0	vdds	NA	4(1)	PU/ PD	LVCMOS
NA	A18	sdrc_dm3	0	O	0	0	0	vdds	NA	4 (1)	PU/ PD	LVCMOS
NA	C2	sdrc_dqs0	0	IO	L	Z	0	vdds	Yes	4 (1)	PU/ PD	LVCMOS
NA	B15	sdrc_dqs1	0	IO	L	Z	0	vdds	Yes	4 (1)	PU/ PD	LVCMOS
NA	B8	sdrc_dqs2	0	IO	L	Z	0	vdds	Yes	4 (1)	PU/ PD	LVCMOS
NA	A19	sdrc_dqs3	0	IO	L	Z	0	vdds	Yes	4 (1)	PU/ PD	LVCMOS
NA	U20	sdrc_ncas	0	O	1	1	0	vdds	NA	4 (1)	PU/ PD	LVCMOS
NA	B13	sdrc_nclk	0	O	1	1	0	vdds	NA	4 (1)	PU/ PD	LVCMOS
NA	T21	sdrc_ncs0	0	O	1	1	0	vdds	NA	4 (1)	PU/ PD	LVCMOS
NA	T20	sdrc_ncs1	0	O	1	1	0	vdds	NA	4 (1)	PU/ PD	LVCMOS
NA	V21	sdrc_nras	0	O	1	1	0	vdds	NA	4 (1)	PU/ PD	LVCMOS
NA	Y18	sdrc_nwe	0	O	1	1	0	vdds	NA	4 (1)	PU/ PD	LVCMOS
AE21	NA	dss_data0	0	IO	L	L	7	vdda	Yes	8	PU/ PD	LVCMOS
		uart1_cts	2	I						NA		
		gpio_70	4	IO						8		
		safe_mode	7	-						8		
AE22	NA	dss_data1	0	IO	L	L	7	vdda	Yes	8	PU/ PD	LVCMOS
		uart1_rts	2	O						8		
		gpio_71	4	IO						8		
		safe_mode	7	-						8		
AE23	NA	dss_data2	0	IO	L	L	7	vdda	Yes	8	PU/ PD	LVCMOS
		gpio_72	4	IO						8		
		safe_mode	7	-						8		
AE24	NA	dss_data3	0	IO	L	L	7	vdda	Yes	8	PU/ PD	LVCMOS
		gpio_73	4	IO						8		
		safe_mode	7	-						8		
AD23	NA	dss_data4	0	IO	L	L	7	vdda	Yes	8	PU/ PD	LVCMOS
		uart3_rx_irrx	2	I						NA		

Copyright © 2010–2011, Texas Instruments Incorporated

Table 2-2. Ball Characteristics (CBC Pkg.)[5] (continued)

BALL BOTTOM [1]	BALL TOP [1]	PIN NAME [2]	MODE [3]	TYPE [4]	BALL RESET STATE [5]	BALL RESET REL. STATE [6]	RESET REL. MODE [7]	POWER [8]	HYS [9]	BUFFER STRENGTH (mA) [10]	PULLUP /DOWN TYPE [11]	IO CELL [12]
		gpio_74	4	IO						8		
		safe_mode	7	-						8		
AD24	NA	dss_data5	0	IO	L	L	7	vdda	Yes	8	PU/ PD	LVCMOS
		uart3_tx_irtx	2	O						8		
		gpio_75	4	IO						8		
		safe_mode	7	-						8		
AC26	NA	dss_data10	0	IO	L	L	7	vdds	Yes	8	PU/ PD	LVCMOS
		gpio_80	4	IO								
		safe_mode	7	-								
AD26	NA	dss_data11	0	IO	L	L	7	vdds	Yes	8	PU/ PD	LVCMOS
		gpio_81	4	IO								
		safe_mode	7	-								
AA25	NA	dss_data12	0	IO	L	L	7	vdds	Yes	8	PU/ PD	LVCMOS
		gpio_82	4	IO								
		safe_mode	7	-								
Y25	NA	dss_data13	0	IO	L	L	7	vdds	Yes	8	PU/ PD	LVCMOS
		gpio_83	4	IO								
		safe_mode	7	-								
AA26	NA	dss_data14	0	IO	L	L	7	vdds	Yes	8	PU/ PD	LVCMOS
		gpio_84	4	IO								
		safe_mode	7	-								
AB26	NA	dss_data15	0	IO	L	L	7	vdds	Yes	8	PU/ PD	LVCMOS
		gpio_85	4	IO								
		safe_mode	7	-								
F25	NA	dss_data20	0	O	H	H	7	vdds	Yes	8	PU/ PD	LVCMOS
		mcspi3_somi	2	IO								
		dss_data2	3	IO								
		gpio_90	4	IO								
		safe_mode	7	-								
AC25	NA	dss_data22	0	O	L	L	7	vdds	Yes	8	PU/ PD	LVCMOS
		mcspi3_cs1	2	O								
		dss_data4	3	IO								
		gpio_92	4	IO								
		safe_mode	7	-								
AB25	NA	dss_data23	0	O	L	L	7	vdds	Yes	8	PU/ PD	LVCMOS
		dss_data5	3	IO								
		gpio_93	4	IO								
		safe_mode	7	-								
G25	NA	dss_pclk	0	O	H	H	7	vdds	Yes	8	PU/ PD	LVCMOS
		gpio_66	4	IO								
		hw_dbg12	5	O								
		safe_mode	7	-								
J2	NA	gpmc_a1	0	O	L	L	7	vdds	Yes	8	PU/ PD	LVCMOS
		gpio_34	4	IO								
		safe_mode	7	-								
H1	NA	gpmc_a2	0	O	L	L	7	vdds	Yes	8	PU/ PD	LVCMOS
		gpio_35	4	IO								
		safe_mode	7	-								
H2	NA	gpmc_a3	0	O	L	L	7	vdds	Yes	8	PU/ PD	LVCMOS
		gpio_36	4	IO								
		safe_mode	7	-								
G2	NA	gpmc_a4	0	O	L	L	7	vdds	Yes	8	PU/ PD	LVCMOS
		gpio_37	4	IO								
		safe_mode	7	-								
F1	NA	gpmc_a5	0	O	L	L	7	vdds	Yes	8	PU/ PD	LVCMOS

Copyright © 2010–2011, Texas Instruments Incorporated

Table 2-2. Ball Characteristics (CBC Pkg.)[5] (continued)

BALL BOTTOM [1]	BALL TOP [1]	PIN NAME [2]	MODE [3]	TYPE [4]	BALL RESET STATE [5]	BALL RESET REL. STATE [6]	RESET REL. MODE [7]	POWER [8]	HYS [9]	BUFFER STRENGTH (mA) [10]	PULLUP /DOWN TYPE [11]	IO CELL [12]
		gpio_38	4	IO								
		safe_mode	7	-								
F2	NA	gpmc_a6	0	O	H	H	7	vdds	Yes	8	PU/ PD	LVCMOS
		gpio_39	4	IO								
		safe_mode	7	-								
E1	NA	gpmc_a7	0	O	H	H	7	vdds	Yes	8	PU/ PD	LVCMOS
		gpio_40	4	IO								
		safe_mode	7	-								
E2	NA	gpmc_a8	0	O	H	H	7	vdds	Yes	8	PU/ PD	LVCMOS
		gpio_41	4	IO								
		safe_mode	7	-								
D1	NA	gpmc_a9	0	O	H	H	7	vdds	Yes	8	PU/ PD	LVCMOS
		sys_ndmareq2	1	I								
		gpio_42	4	IO								
		safe_mode	7	-								
D2	NA	gpmc_a10	0	O	H	H	7	vdds	Yes	8	PU/ PD	LVCMOS
		sys_ndmareq3	1	I								
		gpio_43	4	IO								
		safe_mode	7	-								
N1	L1	gpmc_clk	0	O	L	0	0	vdds	Yes	8	PU/ PD	LVCMOS
		gpio_59	4	IO								
		safe_mode	7	-								
AA2	U2	gpmc_d0	0	IO	H	H	0	vdds	Yes	8	PU/ PD	LVCMOS
AA1	U1	gpmc_d1	0	IO	H	H	0	vdds	Yes	8	PU/ PD	LVCMOS
AC2	V2	gpmc_d2	0	IO	H	H	0	vdds	Yes	8	PU/ PD	LVCMOS
AC1	V1	gpmc_d3	0	IO	H	H	0	vdds	Yes	8	PU/ PD	LVCMOS
AE5	AA3	gpmc_d4	0	IO	H	H	0	vdds	Yes	8	PU/ PD	LVCMOS
AD6	AA4	gpmc_d5	0	IO	H	H	0	vdds	Yes	8	PU/ PD	LVCMOS
AD5	Y3	gpmc_d6	0	IO	H	H	0	vdds	Yes	8	PU/ PD	LVCMOS
AC5	Y4	gpmc_d7	0	IO	H	H	0	vdds	Yes	8	PU/ PD	LVCMOS
V1	R1	gpmc_d8	0	IO	H	H	0	vdds	Yes	8	PU/ PD	LVCMOS
		gpio_44	4	IO								
		safe_mode	7	-								
Y1	T1	gpmc_d9	0	IO	H	H	0	vdds	Yes	8	PU/ PD	LVCMOS
		gpio_45	4	IO								
		safe_mode	7	-								
T1	N1	gpmc_d10	0	IO	H	H	0	vdds	Yes	8	PU/ PD	LVCMOS
		gpio_46	4	IO								
		safe_mode	7	-								
U2	P2	gpmc_d11	0	IO	H	H	0	vdds	Yes	8	PU/ PD	LVCMOS
		gpio_47	4	IO								
		safe_mode	7	-								
U1	P1	gpmc_d12	0	IO	H	H	0	vdds	Yes	8	PU/ PD	LVCMOS
		gpio_48	4	IO								
		safe_mode	7	-								
P1	M1	gpmc_d13	0	IO	H	H	0	vdds	Yes	8	PU/ PD	LVCMOS
		gpio_49	4	IO								
		safe_mode	7	-								
L2	J2	gpmc_d14	0	IO	H	H	0	vdds	Yes	8	PU/ PD	LVCMOS
		gpio_50	4	IO								
		safe_mode	7	-								
M2	K2	gpmc_d15	0	IO	H	H	0	vdds	Yes	8	PU/ PD	LVCMOS
		gpio_51	4	IO								
		safe_mode	7	-								
AD10	AA9	gpmc_nadv_ale	0	O	0	0	0	vdds	NA	8	NA	LVCMOS

Copyright © 2010–2011, Texas Instruments Incorporated

Table 2-2. Ball Characteristics (CBC Pkg.)[5] (continued)

BALL BOTTOM [1]	BALL TOP [1]	PIN NAME [2]	MODE [3]	TYPE [4]	BALL RESET STATE [5]	BALL RESET REL. STATE [6]	RESET REL. MODE [7]	POWER [8]	HYS [9]	BUFFER STRENGTH (mA) [10]	PULLUP /DOWN TYPE [11]	IO CELL [12]
K2	NA	gpmc_nbe0_cle	0	O	L	0	0	vdds	Yes	8	PU/ PD	LVCMOS
		gpio_60	4	IO								
		safe_mode	7	-								
J1	NA	gpmc_nbe1	0	O	L	L	7	vdds	Yes	8	PU/ PD	LVCMOS
		gpio_61	4	IO								
		safe_mode	7	-								
AD8	AA8	gpmc_ncs0	0	O	1	1	0	vdds	NA	8	NA	LVCMOS
AD1	W1	gpmc_ncs1	0	O	H	1	0	vdds	Yes	8	PU/ PD	LVCMOS
		gpio_52	4	IO								
		safe_mode	7	-								
A3	NA	gpmc_ncs2	0	O	H	H	7	vdds	Yes	8	PU/ PD	LVCMOS
		gpio_53	4	IO								
		safe_mode	7	-								
B6	NA	gpmc_ncs3	0	O	H	H	7	vdds	Yes	8	PU/ PD	LVCMOS
		sys_ndmareq0	1	I								
		gpio_54	4	IO								
		safe_mode	7	-								
B4	NA	gpmc_ncs4	0	O	H	H	7	vdds	Yes	8	PU/ PD	LVCMOS
		sys_ndmareq1	1	I								
		mcbsp4_clkx	2	IO								
		gpt_9_pwm_evt	3	IO								
		gpio_55	4	IO								
		safe_mode	7	-								
C4	NA	gpmc_ncs5	0	O	H	H	7	vdds	Yes	8	PU/ PD	LVCMOS
		sys_ndmareq2	1	I								
		mcbsp4_dr	2	I								
		gpt_10_pwm_evt	3	IO								
		gpio_56	4	IO								
		safe_mode	7	-								
B5	NA	gpmc_ncs6	0	O	H	H	7	vdds	Yes	8	PU/ PD	LVCMOS
		sys_ndmareq3	1	I								
		mcbsp4_dx	2	IO								
		gpt_11_pwm_evt	3	IO								
		gpio_57	4	IO								
		safe_mode	7	-								
C5	NA	gpmc_ncs7	0	O	H	H	7	vdds	Yes	8	PU/ PD	LVCMOS
		gpmc_io_dir	1	O								
		mcbsp4_fsx	2	IO								
		gpt_8_pwm_evt	3	IO								
		gpio_58	4	IO								
		safe_mode	7	-								
N2	L2	gpmc_noe	0	O	1	1	0	vdds	NA	8	NA	LVCMOS
M1	K1	gpmc_nwe	0	O	1	1	0	vdds	NA	8	NA	LVCMOS
AC6	Y5	gpmc_nwp	0	O	L	0	0	vdds	Yes	8	PU/ PD	LVCMOS
		gpio_62	4	IO								
		safe_mode	7	-								
AC11	Y10	gpmc_wait0	0	I	H	H	0	vdds	Yes	NA	PU/ PD	LVCMOS
AC8	Y8	gpmc_wait1	0	I	H	H	7	vdds	Yes	8	PU/ PD	LVCMOS
		gpio_63	4	IO								
		safe_mode	7	-								
B3	NA	gpmc_wait2	0	I	H	H	7	vdds	Yes	8	PU/ PD	LVCMOS
		uart4_tx	2	O								
		gpio_64	4	IO								
		safe_mode	7	-								
C6	NA	gpmc_wait3	0	I	H	H	7	vdds	Yes	8	PU/ PD	LVCMOS

Copyright © 2010–2011, Texas Instruments Incorporated

Table 2-2. Ball Characteristics (CBC Pkg.)[5] (continued)

BALL BOTTOM [1]	BALL TOP [1]	PIN NAME [2]	MODE [3]	TYPE [4]	BALL RESET STATE [5]	BALL RESET REL. STATE [6]	RESET REL. MODE [7]	POWER [8]	HYS [9]	BUFFER STRENGTH (mA) [10]	PULLUP /DOWN TYPE [11]	IO CELL [12]
		sys_ndmareq1	1	I								
		uart4_rx	2	I								
		gpio_65	4	IO								
		safe_mode	7	-								
W19	NA	hsusb0_clk	0	I	L	L	7	vdds	Yes	8	PU/ PD	LVCMOS
		gpio_120	4	IO								
		safe_mode	7	-								
V20	NA	hsusb0_data0	0	IO	L	L	7	vdds	Yes	4	PU/ PD	LVCMOS
		uart3_tx_irtx	2	O								
		gpio_125	4	IO								
		uart2_tx	5	O								
		safe_mode	7	-								
Y20	NA	hsusb0_data1	0	IO	L	L	7	vdds	Yes	4	PU/ PD	LVCMOS
		uart3_rx_irrx	2	I								
		gpio_130	4	IO								
		uart2_rx	5	I								
		safe_mode	7	-								
V18	NA	hsusb0_data2	0	IO	L	L	7	vdds	Yes	4	PU/ PD	LVCMOS
		uart3_rts_sd	2	O								
		gpio_131	4	IO								
		uart2_rts	5	O								
		safe_mode	7	-								
W20	NA	hsusb0_data3	0	IO	L	L	7	vdds	Yes	4	PU/ PD	LVCMOS
		uart3_cts_rctx	2	IO								
		gpio_169	4	IO								
		uart2_cts	5	I								
		safe_mode	7	-								
W17	NA	hsusb0_data4	0	IO	L	L	7	vdds	Yes	4	PU/ PD	LVCMOS
		gpio_188	4	IO								
		safe_mode	7	-								
Y18	NA	hsusb0_data5	0	IO	L	L	7	vdds	Yes	4	PU/ PD	LVCMOS
		gpio_189	4	IO								
		safe_mode	7	-								
Y19	NA	hsusb0_data6	0	IO	L	L	7	vdds	Yes	4	PU/ PD	LVCMOS
		gpio_190	4	IO								
		safe_mode	7	-								
Y17	NA	hsusb0_data7	0	IO	L	L	7	vdds	Yes	4	PU/ PD	LVCMOS
		gpio_191	4	IO								
		safe_mode	7	-								
V19	NA	hsusb0_dir	0	I	L	L	7	vdds	Yes	4	PU/ PD	LVCMOS
		gpio_122	4	IO								
		safe_mode	7	-								
W18	NA	hsusb0_nxt	0	I	L	L	7	vdds	Yes	4	PU/ PD	LVCMOS
		gpio_124	4	IO								
		safe_mode	7	-								
U20	NA	hsusb0_stp	0	O	H	H	7	vdds	Yes	4	PU/ PD	LVCMOS
		gpio_121	4	IO								
		safe_mode	7	-								
U15	NA	jtag_ntrst	0	I	L	L	0	vdds	Yes	NA	PU/ PD	LVCMOS
W13	NA	jtag_rtck	0	O	L	0	0	vdds	NA	4	PU/ PD	LVCMOS
V14	NA	jtag_tck	0	I	L	L	0	vdds	Yes	NA	PU/ PD	LVCMOS
U16	NA	jtag_tdi	0	I	H	H	0	vdds	Yes	NA	PU/ PD	LVCMOS
Y13	NA	jtag_tdo	0	O	L	Z	0	vdds	NA	4	PU/ PD	LVCMOS
V15	NA	jtag_tms_tmsc	0	IO	H	H	0	vdds	Yes	4	PU/ PD	LVCMOS

Copyright © 2010–2011, Texas Instruments Incorporated

Table 2-2. Ball Characteristics (CBC Pkg.)[5] (continued)

BALL BOTTOM [1]	BALL TOP [1]	PIN NAME [2]	MODE [3]	TYPE [4]	BALL RESET STATE [5]	BALL RESET REL. STATE [6]	RESET REL. MODE [7]	POWER [8]	HYS [9]	BUFFER STRENGTH (mA) [10]	PULLUP /DOWN TYPE [11]	IO CELL [12]
N19	NA	mmc1_clk	0	O	L	L	7	vdds_mmc1[13]	Yes	1	PU/ PD[3]	LVCMOS
		gpio_120[8]	4	IO								
		safe_mode	7	-								
L18	NA	mmc1_cmd	0	IO	L	L	7	vdds_mmc1[13]	Yes	1	PU/ PD[3]	LVCMOS
		gpio_121[8]	4	IO								
		safe_mode	7	-								
M19	NA	mmc1_dat0	0	IO	L	L	7	vdds_mmc1[13]	Yes	1	PU/ PD[3]	LVCMOS
		gpio_122[8]	4	IO								
		safe_mode	7	-								
M18	NA	mmc1_dat1	0	IO	L	L	7	vdds_mmc1[13]	Yes	1	PU/ PD[3]	LVCMOS
		gpio_123[8]	4	IO								
		safe_mode	7	-								
K18	NA	mmc1_dat2	0	IO	L	L	7	vdds_mmc1[13]	Yes	1	PU/ PD[3]	LVCMOS
		gpio_124[8]	4	IO								
		safe_mode	7	-								
N20	NA	mmc1_dat3	0	IO	L	L	7	vdds_mmc1[13]	Yes	1	PU/ PD[3]	LVCMOS
		gpio_125[8]	4	IO								
		safe_mode	7	-								
M20	NA	gpio_126[8]	4	IO	L	L	7	vdds_x	Yes	1	PU/PD[3]	LVCMOS
		safe_mode	7	-								
P17	NA	gpio_127[8]	4	IO	L	L	7	vdds_x	Yes	1	PU/PD[3]	LVCMOS
		safe_mode	7	-								
P18	NA	gpio_128	4	IO	L	L	7	vdds	Yes	4	PU/PD	LVCMOS
		safe_mode	7	-								
P19	NA	gpio_129[8]	4	IO	L	L	7	vdds_x	Yes	1	PU/PD [3]	LVCMOS
		safe_mode	7	-								
J25	NA	i2c1_scl	0	OD	H	H	0	vdds	NA	3	PU/ PD[9] [10]	Open Drain
J24	NA	i2c1_sda	0	IOD	H	H	0	vdds	Yes	3	PU/ PD[9] [10]	LVCMOS Open Drain
C2	NA	i2c2_scl	0	OD	H	H	7	vdds	Yes	3	PU/ PD[9][11]	LVCMOS Open Drain
		gpio_168	4	IO						4		
		safe_mode	7	-						4		
C1	NA	i2c2_sda	0	IOD	H	H	7	vdds	Yes	3	PU/ PD[9][11]	LVCMOS Open Drain
		gpio_183	4	IO						4		
		safe_mode	7	-						4		
AB4	NA	i2c3_scl	0	OD	H	H	7	vdds	Yes	3	PU/ PD[9][11]	LVCMOS Open Drain
		gpio_184	4	IO						4		
		safe_mode	7	-						4		
AC4	NA	i2c3_sda	0	IOD	H	H	7	vdds	Yes	3	PU/ PD[9][11]	LVCMOS Open Drain
		gpio_185	4	IO						4		
		safe_mode	7	-						4		
U19	NA	mcbsp1_clkr	0	IO	L	L	7	vdds	Yes	4	PU/ PD	LVCMOS
		mcspi4_clk	1	IO								
		gpio_156	4	IO								
		safe_mode	7	-								
T17	NA	mcbsp1_clkx	0	IO	L	L	7	vdds	Yes	4	PU/ PD	LVCMOS
		mcbsp3_clkx	2	IO								
		gpio_162	4	IO								
		safe_mode	7	-								

Copyright © 2010–2011, Texas Instruments Incorporated

Table 2-2. Ball Characteristics (CBC Pkg.)[5] (continued)

BALL BOTTOM [1]	BALL TOP [1]	PIN NAME [2]	MODE [3]	TYPE [4]	BALL RESET STATE [5]	BALL RESET REL. STATE [6]	RESET REL. MODE [7]	POWER [8]	HYS [9]	BUFFER STRENGTH (mA) [10]	PULLUP /DOWN TYPE [11]	IO CELL [12]
T20	NA	mcbsp1_dr	0	I	L	L	7	vdds	Yes	4	PU/ PD	LVCMOS
		mcspi4_somi	1	IO								
		mcbsp3_dr	2	I								
		gpio_159	4	IO								
		safe_mode	7	-								
U17	NA	mcbsp1_dx	0	IO	L	L	7	vdds	Yes	4	PU/ PD	LVCMOS
		mcspi4_simo	1	IO								
		mcbsp3_dx	2	IO								
		gpio_158	4	IO								
		safe_mode	7	-								
V17	NA	mcbsp1_fsr	0	IO	L	L	7	vdds	Yes	4	PU/ PD	LVCMOS
		cam_global_reset	2	IO								
		gpio_157	4	IO								
		safe_mode	7	-								
P20	NA	mcbsp1_fsx	0	IO	L	L	7	vdds	Yes	4	PU/ PD	LVCMOS
		mcspi4_cs0	1	IO								
		mcbsp3_fsx	2	IO								
		gpio_161	4	IO								
		safe_mode	7	-								
R18	NA	mcbsp2_clkx	0	IO	L	L	7	vdds	Yes	4	PU/ PD	LVCMOS
		gpio_117	4	IO								
		safe_mode	7	-								
T18	NA	mcbsp2_dr	0	I	L	L	7	vdds	Yes	4	PU/ PD	LVCMOS
		gpio_118	4	IO								
		safe_mode	7	-								
R19	NA	mcbsp2_dx	0	IO	L	L	7	vdds	Yes	4	PU/ PD	LVCMOS
		gpio_119	4	IO								
		safe_mode	7	-								
U18	NA	mcbsp2_fsx	0	IO	L	L	7	vdds	Yes	4	PU/ PD	LVCMOS
		gpio_116	4	IO								
		safe_mode	7	-								
P9	NA	mcspi1_clk	0	IO	L	L	7	vdds	Yes	4	PU/ PD	LVCMOS
		mmc2_dat4	1	IO								
		gpio_171	4	IO								
		safe_mode	7	-								
R7	NA	mcspi1_cs0	0	IO	H	H	7	vdds	Yes	4	PU/ PD	LVCMOS
		mmc2_dat7	1	IO								
		gpio_174	4	IO								
		safe_mode	7	-								
R9	NA	mcspi1_cs2	0	O	H	H	7	vdds	Yes	4	PU/ PD	LVCMOS
		mmc3_clk	3	O								
		gpio_176	4	IO								
		safe_mode	7	-								
P8	NA	mcspi1_simo	0	IO	L	L	7	vdds	Yes	4	PU/ PD	LVCMOS
		mmc2_dat5	1	IO								
		gpio_172	4	IO								
		safe_mode	7	-								
P7	NA	mcspi1_somi	0	IO	L	L	7	vdds	Yes	4	PU/ PD	LVCMOS
		mmc2_dat6	1	IO								
		gpio_173	4	IO								
		safe_mode	7	-								
W7	NA	mcspi2_clk	0	IO	L	L	7	vdds	Yes	4	PU/ PD	LVCMOS
		hsusb2_data7	3	IO								
		gpio_178	4	IO								
		safe_mode	7	-								

Copyright © 2010–2011, Texas Instruments Incorporated

Table 2-2. Ball Characteristics (CBC Pkg.)[5] (continued)

BALL BOTTOM [1]	BALL TOP [1]	PIN NAME [2]	MODE [3]	TYPE [4]	BALL RESET STATE [5]	BALL RESET REL. STATE [6]	RESET REL. MODE [7]	POWER [8]	HYS [9]	BUFFER STRENGTH (mA) [10]	PULLUP /DOWN TYPE [11]	IO CELL [12]
V8	NA	mcspi2_cs0	0	IO	H	H	7	vdds	Yes	4	PU/ PD	LVCMOS
		gpt_11_pwm_evt	1	IO								
		hsusb2_data6	3	IO								
		gpio_181	4	IO								
		safe_mode	7	-								
W8	NA	mcspi2_simo	0	IO	L	L	7	vdds	Yes	4	PU/ PD	LVCMOS
		gpt_9_pwm_evt	1	IO								
		hsusb2_data4	3	IO								
		gpio_179	4	IO								
		safe_mode	7	-								
U8	NA	mcspi2_somi	0	IO	L	L	7	vdds	Yes	4	PU/ PD	LVCMOS
		gpt_10_pwm_evt	1	IO								
		hsusb2_data5	3	IO								
		gpio_180	4	IO								
		safe_mode	7	-								
W10	NA	mmc2_clk	0	O	L	L	7	vdds	Yes	4	PU/ PD	LVCMOS
		mcspi3_clk	1	IO								
		gpio_130	4	IO								
		safe_mode	7	-								
R10	NA	mmc2_cmd	0	IO	H	H	7	vdds	Yes	4	PU/ PD	LVCMOS
		mcspi3_simo	1	IO								
		gpio_131	4	IO								
		safe_mode	7	-								
T10	NA	mmc2_dat0	0	IO	H	H	7	vdds	Yes	4	PU/ PD	LVCMOS
		mcspi3_somi	1	IO								
		gpio_132	4	IO								
		safe_mode	7	-								
T9	NA	mmc2_dat1	0	IO	H	H	7	vdds	Yes	4	PU/ PD	LVCMOS
		gpio_133	4	IO								
		safe_mode	7	-								
U10	NA	mmc2_dat2	0	IO	H	H	7	vdds	Yes	4	PU/ PD	LVCMOS
		mcspi3_cs1	1	O								
		gpio_134	4	IO								
		safe_mode	7	-								
U9	NA	mmc2_dat3	0	IO	H	H	7	vdds	Yes	4	PU/ PD	LVCMOS
		mcspi3_cs0	1	IO								
		gpio_135	4	IO								
		safe_mode	7	-								
V10	NA	mmc2_dat4	0	IO	L	L	7	vdds	Yes	4	PU/ PD	LVCMOS
		mmc2_dir_dat0	1	O								
		mmc3_dat0	3	IO								
		gpio_136	4	IO								
		safe_mode	7	-								
R2	NA	uart1_rts	0	O	L	L	7	vdds	Yes	4	PU/ PD	LVCMOS
		gpio_149	4	IO								
		safe_mode	7	-								
H3	NA	uart1_rx	0	I	L	L	7	vdds	Yes	4	PU/ PD	LVCMOS
		mcbsp1_clkr	2	IO								
		mcspi4_clk	3	IO								
		gpio_151	4	IO								
		safe_mode	7	-								
L4	NA	uart1_tx	0	O	L	L	7	vdds	Yes	4	PU/ PD	LVCMOS
		gpio_148	4	IO								
		safe_mode	7	-								
Y24	NA	uart2_cts	0	I	H	H	7	vdds	Yes	4	PU/ PD	LVCMOS

Copyright © 2010–2011, Texas Instruments Incorporated

Table 2-2. Ball Characteristics (CBC Pkg.)[5] (continued)

BALL BOTTOM [1]	BALL TOP [1]	PIN NAME [2]	MODE [3]	TYPE [4]	BALL RESET STATE [5]	BALL RESET REL. STATE [6]	RESET REL. MODE [7]	POWER [8]	HYS [9]	BUFFER STRENGTH (mA) [10]	PULLUP /DOWN TYPE [11]	IO CELL [12]
		mcbsp3_dx	1	IO								
		gpt_9_pwm_evt	2	IO								
		gpio_144	4	IO								
		safe_mode	7	-								
AA24	NA	uart2_rts	0	O	H	H	7	vdds	Yes	4	PU/ PD	LVCMOS
		mcbsp3_dr	1	I								
		gpt_10_pwm_evt	2	IO								
		gpio_145	4	IO								
		safe_mode	7	-								
AD21	NA	uart2_rx	0	I	H	H	7	vdds	Yes	4	PU/ PD	LVCMOS
		mcbsp3_fsx	1	IO								
		gpt_8_pwm_evt	2	IO								
		gpio_147	4	IO								
		safe_mode	7	-								
AD22	NA	uart2_tx	0	O	H	H	7	vdds	Yes	4	PU/ PD	LVCMOS
		mcbsp3_clkx	1	IO								
		gpt_11_pwm_evt	2	IO								
		gpio_146	4	IO								
		safe_mode	7	-								
F23	NA	uart3_cts_rctx	0	IO	H	H	7	vdds	Yes	4	PU/ PD	LVCMOS
		gpio_163	4	IO								
		safe_mode	7	-								
F24	NA	uart3_rts_sd	0	O	H	H	7	vdds	Yes	4	PU/ PD	LVCMOS
		gpio_164	4	IO								
		safe_mode	7	-								
H24	NA	uart3_rx_irrx	0	I	H	H	7	vdds	Yes	4	PU/ PD	LVCMOS
		gpio_165	4	IO								
		safe_mode	7	-								
G24	NA	uart3_tx_irtx	0	O	H	H	7	vdds	Yes	4	PU/ PD	LVCMOS
		gpio_166	4	IO								
		safe_mode	7	-								
J23	NA	hdq_sio	0	IOD	H	H	7	vdds	Yes	4	PU/ PD	LVCMOS Open Drain
		sys_altclk	1	I								
		i2c2_sccbe	2	OD								
		i2c3_sccbe	3	OD								
		gpio_170	4	IO								
		safe_mode	7	-								
AD15	NA	i2c4_scl	0	OD	H	H	0	vdds	Yes	3	PU/ PD[9] [10]	LVCMOS Open Drain
		sys_nvmode1	1	O						4		
		safe_mode	7	-						4		
W16	NA	i2c4_sda	0	IOD	H	H	0	vdds	Yes	3	PU/ PD[9] [10]	LVCMOS Open Drain
		sys_nvmode2	1	O						4		
		safe_mode	7	-						4		
F3	NA	sys_boot0	0	I	Z	Z	0	vdds	Yes	8	PU/ PD	LVCMOS
		dss_data18	3	IO								
		gpio_2	4	IO								
		safe_mode	7	-								
D3	NA	sys_boot1	0	I	Z	Z	0	vdds	Yes	8	PU/ PD	LVCMOS
		dss_data19	3	IO								
		gpio_3	4	IO								
		safe_mode	7	-								
C3	NA	sys_boot2	0	I	Z	Z	0	vdds	Yes	8	PU/ PD	LVCMOS
		gpio_4	4	IO								

Copyright © 2010–2011, Texas Instruments Incorporated

Table 2-2. Ball Characteristics (CBC Pkg.)[5] (continued)

BALL BOTTOM [1]	BALL TOP [1]	PIN NAME [2]	MODE [3]	TYPE [4]	BALL RESET STATE [5]	BALL RESET REL. STATE [6]	RESET REL. MODE [7]	POWER [8]	HYS [9]	BUFFER STRENGTH (mA) [10]	PULLUP /DOWN TYPE [11]	IO CELL [12]
		safe_mode	7	-								
E3	NA	sys_boot3	0	I	Z	Z	0	vdds	Yes	8	PU/ PD	LVCMOS
		dss_data20	3	O								
		gpio_5	4	IO								
		safe_mode	7	-								
E4	NA	sys_boot4	0	I	Z	Z	0	vdds	Yes	8	PU/ PD	LVCMOS
		mmc2_dir_dat2	1	O								
		dss_data21	3	O								
		gpio_6	4	IO								
		safe_mode	7	-								
G3	NA	sys_boot5	0	I	Z	Z	0	vdds	Yes	8	PU/ PD	LVCMOS
		mmc2_dir_dat3	1	O								
		dss_data22	3	O								
		gpio_7	4	IO								
		safe_mode	7	-								
D4	NA	sys_boot6	0	I	Z	Z	0	vdds	Yes	8	PU/ PD	LVCMOS
		dss_data23	3	O								
		gpio_8	4	IO								
		safe_mode	7	-								
AE14	NA	sys_clkout1	0	O	L	L	7[12]	vdds	Yes	4	PU/ PD	LVCMOS
		gpio_10	4	IO								
		safe_mode	7	-								
W11	NA	sys_clkout2	0	O	L	L	7	vdds	Yes	4	PU/ PD	LVCMOS
		gpio_186	4	IO								
		safe_mode	7	-								
W15	NA	sys_clkreq	0	IO	0	see [7]	0	vdds	Yes	4	PU/ PD	LVCMOS
		gpio_1	4	IO								
		safe_mode	7	-								
V16	NA	sys_nirq	0	I	H	H	7	vdds	Yes	4	PU/ PD	LVCMOS
		gpio_0	4	IO								
		safe_mode	7	-								
V13	NA	sys_nrespwron	0	I	Z	Z	0	vdds	Yes	NA	No	LVCMOS
AD7	AA5	sys_nreswarm	0	IOD	0	H	0	vdds	Yes	4	PU/ PD	LVCMOS
		gpio_30	4	IO								Open Drain
		safe_mode	7	-								
V12	NA	sys_off_mode	0	O	0	L	7	vdds	Yes	4	PU/ PD	LVCMOS
		gpio_9	4	IO								
		safe_mode	7	-								
AF19	NA	sys_xtalin	0	AI	Z	Z	0	vdds	Yes	NA	NA	LVCMOS Analog
AF20	NA	sys_xtalout	0	AO	Z	0	0	vdds	NA	NA	NA	Analog
W26	NA	cvideo1_out	0	AO	0	0	0	vdda_dac	NA	NA	NA	10-bit DAC
V26	NA	cvideo2_out	0	AO	0	0	0	vdda_dac	NA	NA	NA	10-bit DAC
W25	NA	cvideo1_vfb	0	AO	0	NA	0	vdda_dac	NA	NA	NA	10-bit DAC
U24	NA	cvideo2_vfb	0	AO	0	NA	0	vdda_dac	NA	NA	NA	10-bit DAC
V23	NA	cvideo1_rset	0	AIO	Z	NA	0	vdda_dac	No	NA	NA	10-bit DAC
AE20	NA	sys_32k	0	I	Z	Z	0	vdds	Yes	NA	PU/ PD	LVCMOS
A24	NA	cam_d2	0	I	L	L	7	vdds	Yes	8	PU/ PD	LVCMOS
		gpio_101	4	IO								
		hw_dbg4	5	O								
		safe_mode	7	-								
B24	NA	cam_d3	0	I	L	L	7	vdds	Yes	8	PU/ PD	LVCMOS
		gpio_102	4	IO								
		hw_dbg5	5	O								
		safe_mode	7	-								

Copyright © 2010–2011, Texas Instruments Incorporated

Table 2-2. Ball Characteristics (CBC Pkg.)[5] (continued)

BALL BOTTOM [1]	BALL TOP [1]	PIN NAME [2]	MODE [3]	TYPE [4]	BALL RESET STATE [5]	BALL RESET REL. STATE [6]	RESET REL. MODE [7]	POWER [8]	HYS [9]	BUFFER STRENGTH (mA) [10]	PULLUP /DOWN TYPE [11]	IO CELL [12]
D24	NA	cam_d4	0	I	L	L	7	vdds	Yes	8	PU/ PD	LVCMOS
		gpio_103	4	IO								
		hw_dbg6	5	O								
		safe_mode	7	-								
C24	NA	cam_d5	0	I	L	L	7	vdds	Yes	8	PU/ PD	LVCMOS
		gpio_104	4	IO								
		hw_dbg7	5	O								
		safe_mode	7	-								
D25	NA	cam_d10	0	I	L	L	7	vdds	Yes	8	PU/ PD	LVCMOS
		gpio_109	4	IO								
		hw_dbg8	5	O								
		safe_mode	7	-								
E26	NA	cam_d11	0	I	L	L	7	vdds	Yes	8	PU/ PD	LVCMOS
		gpio_110	4	IO								
		hw_dbg9	5	O								
		safe_mode	7	-								
B23	NA	cam_fld	0	IO	L	L	7	vdds	Yes	4	PU/ PD	LVCMOS
		cam_global_reset	2	IO								
		gpio_98	4	IO								
		hw_dbg3	5	O								
		safe_mode	7	-								
C23	NA	cam_hs	0	IO	L	L	7	vdds	Yes	4	PU/ PD	LVCMOS
		gpio_94	4	IO								
		hw_dbg0	5	O								
		safe_mode	7	-								
C26	NA	cam_pclk	0	I	L	L	7	vdds	Yes	4	PU/ PD	LVCMOS
		gpio_97	4	IO								
		hw_dbg2	5	O								
		safe_mode	7	-								
D26	NA	cam_strobe	0	O	L	L	7	vdds	Yes	4	PU/ PD	LVCMOS
		gpio_126	4	IO								
		hw_dbg11	5	O								
		safe_mode	7	-								
C25	NA	cam_xclka	0	O	L	L	7	vdds	Yes	4	PU/ PD	LVCMOS
		gpio_96	4	IO								
		safe_mode	7	-								
E25	NA	cam_xclkb	0	O	L	L	7	vdds	Yes	4	PU/ PD	LVCMOS
		gpio_111	4	IO								
		safe_mode	7	-								
P25	NA	cam_d6	0	I	L	L	7	vdds	Yes	NA	PU/ PD	SubLVDS
		gpio_105	4	I								
		safe_mode	7	-								
P26	NA	cam_d7	0	I	L	L	7	vdds	Yes	NA	PU/ PD	SubLVDS
		gpio_106	4	I								
		safe_mode	7	-								
N25	NA	cam_d8	0	I	L	L	7	vdds	NA	NA	PU/ PD	SubLVDS
		gpio_107	4	I								
		safe_mode	7	-								
N26	NA	cam_d9	0	I	L	L	7	vdds	NA	NA	PU/ PD	SubLVDS
		gpio_108	4	I								
		safe_mode	7	-								
D23	NA	cam_vs	0	IO	L	L	7	vdds	Yes	4	PU/ PD	LVCMOS
		gpio_95	4	IO								
		hw_dbg1	5	O								
		safe_mode	7	-								

Copyright © 2010–2011, Texas Instruments Incorporated

Table 2-2. Ball Characteristics (CBC Pkg.)[5] (continued)

BALL BOTTOM [1]	BALL TOP [1]	PIN NAME [2]	MODE [3]	TYPE [4]	BALL RESET STATE [5]	BALL RESET REL. STATE [6]	RESET REL. MODE [7]	POWER [8]	HYS [9]	BUFFER STRENGTH (mA) [10]	PULLUP /DOWN TYPE [11]	IO CELL [12]
A23	NA	cam_wen	0	I	L	L	7	vdds	Yes	4	PU/ PD	LVCMOS
		cam_shutter	2	O								
		gpio_167	4	IO								
		hw_dbg10	5	O								
		safe_mode	7	-								
F26	NA	dss_acbias	0	O	L	L	7	vdds	Yes	8	PU/ PD	LVCMOS
		gpio_69	4	IO								
		safe_mode	7	-								
G26	NA	dss_data6	0	IO	L	L	7	vdds	Yes	8	PU/ PD	LVCMOS
		uart1_tx	2	O								
		gpio_76	4	IO								
		hw_dbg14	5	O								
		safe_mode	7	-								
H25	NA	dss_data7	0	IO	L	L	7	vdds	Yes	8	PU/ PD	LVCMOS
		uart1_rx	2	I								
		gpio_77	4	IO								
		hw_dbg15	5	O								
		safe_mode	7	-								
H26	NA	dss_data8	0	IO	L	L	7	vdds	Yes	8	PU/ PD	LVCMOS
		uart3_rx_irrx	2	I								
		gpio_78	4	IO								
		hw_dbg16	5	O								
		safe_mode	7	-								
J26	NA	dss_data9	0	IO	L	L	7	vdds	Yes	8	PU/ PD	LVCMOS
		uart3_tx_irtx	2	O								
		gpio_79	4	IO								
		hw_dbg17	5	O								
		safe_mode	7	-								
L25	NA	dss_data16	0	IO	L	L	7	vdds	Yes	8	PU/ PD	LVCMOS
		gpio_86	4	IO								
		safe_mode	7	-								
L26	NA	dss_data17	0	IO	L	L	7	vdds	Yes	8	PU/ PD	LVCMOS
		gpio_87	4	IO								
		safe_mode	7	-								
M24	NA	dss_data18	0	IO	L	L	7	vdds	Yes	8	PU/ PD	LVCMOS
		mcspi3_clk	2	IO								
		dss_data0	3	IO								
		gpio_88	4	IO								
		safe_mode	7	-								
M26	NA	dss_data19	0	IO	L	L	7	vdds	Yes	8	PU/ PD	LVCMOS
		mcspi3_simo	2	IO								
		dss_data1	3	IO								
		gpio_89	4	IO								
		safe_mode	7	-								
N24	NA	dss_data21	0	O	L	L	7	vdds	Yes	8	PU/ PD	LVCMOS
		mcspi3_cs0	2	IO								
		dss_data3	3	IO								
		gpio_91	4	IO								
		safe_mode	7	-								
K24	NA	dss_hsync	0	O	H	H	7	vdds	Yes	4	PU/ PD	LVCMOS
		gpio_67	4	IO								
		hw_dbg13	5	O								
		safe_mode	7	-								
M25	NA	dss_vsync	0	O	H	H	7	vdds	Yes	4	PU/ PD	LVCMOS
		gpio_68	4	IO								

Copyright © 2010–2011, Texas Instruments Incorporated

Table 2-2. Ball Characteristics (CBC Pkg.)[5] (continued)

BALL BOTTOM [1]	BALL TOP [1]	PIN NAME [2]	MODE [3]	TYPE [4]	BALL RESET STATE [5]	BALL RESET REL. STATE [6]	RESET REL. MODE [7]	POWER [8]	HYS [9]	BUFFER STRENGTH (mA) [10]	PULLUP /DOWN TYPE [11]	IO CELL [12]
		safe_mode	7	-								
R8	NA	mcspi1_cs1	0	O	H	H	7	vdds	Yes	4	PU/ PD	LVCMOS
		mmc3_cmd	3	IO								
		gpio_175	4	IO								
		safe_mode	7	-								
T8	NA	mcspi1_cs3	0	O	H	H	7	vdds	Yes	4	PU/ PD	LVCMOS
		hsusb2_data2	3	IO								
		gpio_177	4	IO								
		mm2_txdat	5	IO								
		safe_mode	7	-								
V9	NA	mcspi2_cs1	0	O	L	L	7	vdds	Yes	4	PU/ PD	LVCMOS
		gpt_8_pwm_evt	1	IO								
		hsusb2_data3	3	IO								
		gpio_182	4	IO								
		mm2_txen_n	5	IO								
		safe_mode	7	-								
T19	NA	mcbsp_clks	0	I	L	L	7	vdds	Yes	4	PU/ PD	LVCMOS
		cam_shutter	2	O								
		gpio_160	4	IO								
		uart1_cts	5	I								
		safe_mode	7	-								
AB2	NA	etk_clk	0	O	H	H	4	vdds	Yes	4	PU/ PD	LVCMOS
		mcbsp5_clkx	1	IO								
		mmc3_clk	2	O								
		hsusb1_stp	3	O								
		gpio_12	4	IO								
		mm1_rxdp	5	IO								
		hw_dbg0	7	O								
AB3	NA	etk_ctl	0	O	H	H	4	vdds	Yes	4	PU/ PD	LVCMOS
		mmc3_cmd	2	IO								
		hsusb1_clk	3	O								
		gpio_13	4	IO								
		hw_dbg1	7	O								
AC3	NA	etk_d0	0	O	H	H	4	vdds	Yes	4	PU/ PD	LVCMOS
		mcspi3_simo	1	IO								
		mmc3_dat4	2	IO								
		hsusb1_data0	3	IO								
		gpio_14	4	IO								
		mm1_rxrcv	5	IO								
		hw_dbg2	7	O								
AD4	NA	etk_d1	0	O	H	H	4	vdds	Yes	4	PU/ PD	LVCMOS
		mcspi3_somi	1	IO								
		hsusb1_data1	3	IO								
		gpio_15	4	IO								
		mm1_txse0	5	IO								
		hw_dbg3	7	O								
AD3	NA	etk_d2	0	O	H	H	4	vdds	Yes	4	PU/ PD	LVCMOS
		mcspi3_cs0	1	IO								
		hsusb1_data2	3	IO								
		gpio_16	4	IO								
		mm1_txdat	5	IO								
		hw_dbg4	7	O								
AA3	NA	etk_d3	0	O	H	H	4	vdds	Yes	4	PU/ PD	LVCMOS
		mcspi3_clk	1	IO								
		mmc3_dat3	2	IO								

Copyright © 2010–2011, Texas Instruments Incorporated

Table 2-2. Ball Characteristics (CBC Pkg.)[5] (continued)

BALL BOTTOM [1]	BALL TOP [1]	PIN NAME [2]	MODE [3]	TYPE [4]	BALL RESET STATE [5]	BALL RESET REL. STATE [6]	RESET REL. MODE [7]	POWER [8]	HYS [9]	BUFFER STRENGTH (mA) [10]	PULLUP /DOWN TYPE [11]	IO CELL [12]
		hsusb1_data7	3	IO								
		gpio_17	4	IO								
		hw_dbg5	7	O								
Y3	NA	etk_d4	0	O	L	L	4	vdds	Yes	4	PU/ PD	LVCMOS
		mcbsp5_dr	1	I								
		mmc3_dat0	2	IO								
		hsusb1_data4	3	IO								
		gpio_18	4	IO								
		hw_dbg6	7	O								
AB1	NA	etk_d5	0	O	L	L	4	vdds	Yes	4	PU/ PD	LVCMOS
		mcbsp5_fsx	1	IO								
		mmc3_dat1	2	IO								
		hsusb1_data5	3	IO								
		gpio_19	4	IO								
		hw_dbg7	7	O								
AE3	NA	etk_d6	0	O	L	L	4	vdds	Yes	4	PU/ PD	LVCMOS
		mcbsp5_dx	1	O								
		mmc3_dat2	2	IO								
		hsusb1_data6	3	IO								
		gpio_20	4	IO								
		hw_dbg8	7	O								
AD2	NA	etk_d7	0	O	L	L	4	vdds	Yes	4	PU/ PD	LVCMOS
		mcspi3_cs1	1	O								
		mmc3_dat7	2	IO								
		hsusb1_data3	3	IO								
		gpio_21	4	IO								
		mm1_txen_n	5	IO								
		hw_dbg9	7	O								
AA4	NA	etk_d8	0	O	L	L	4	vdds	Yes	4	PU/ PD	LVCMOS
		mmc3_dat6	2	IO								
		hsusb1_dir	3	I								
		gpio_22	4	IO								
		hw_dbg10	7	O								
V2	NA	etk_d9	0	O	L	L	4	vdds	Yes	4	PU/ PD	LVCMOS
		mmc3_dat5	2	IO								
		hsusb1_nxt	3	I								
		gpio_23	4	IO								
		mm1_rxdm	5	IO								
		hw_dbg11	7	O								
AE4	NA	etk_d10	0	O	L	L	4	vdds	Yes	4	PU/ PD	LVCMOS
		uart1_rx	2	I								
		hsusb2_clk	3	O								
		gpio_24	4	IO								
		hw_dbg12	7	O								
AF6	NA	etk_d11	0	O	L	L	4	vdds	Yes	4	PU/ PD	LVCMOS
		hsusb2_stp	3	O								
		gpio_25	4	IO								
		mm2_rxdp	5	IO								
		hw_dbg13	7	O								
AE6	NA	etk_d12	0	O	L	L	4	vdds	Yes	4	PU/ PD	LVCMOS
		hsusb2_dir	3	I								
		gpio_26	4	IO								
		hw_dbg14	7	O								
AF7	NA	etk_d13	0	O	L	L	4	vdds	Yes	4	PU/ PD	LVCMOS
		hsusb2_nxt	3	I								

Copyright © 2010–2011, Texas Instruments Incorporated

Table 2-2. Ball Characteristics (CBC Pkg.)[5] (continued)

BALL BOTTOM [1]	BALL TOP [1]	PIN NAME [2]	MODE [3]	TYPE [4]	BALL RESET STATE [5]	BALL RESET REL. STATE [6]	RESET REL. MODE [7]	POWER [8]	HYS [9]	BUFFER STRENGTH (mA) [10]	PULLUP /DOWN TYPE [11]	IO CELL [12]
		gpio_27	4	IO								
		mm2_rxdm	5	IO								
		hw_dbg15	7	O								
AF9	NA	etk_d14	0	O	L	L	4	vdds	Yes	4	PU/ PD	LVCMOS
		hsusb2_data0	3	IO								
		gpio_28	4	IO								
		mm2_rxrcv	5	IO								
		hw_dbg16	7	O								
AE9	NA	etk_d15	0	O	L	L	4	vdds	Yes	4	PU/ PD	LVCMOS
		hsusb2_data1	3	IO								
		gpio_29	4	IO								
		mm2_txse0	5	IO								
		hw_dbg17	7	O								
Y15	NA	jtag_emu0	0	IO	H	H	0	vdds	Yes	4	PU/ PD	LVCMOS
		gpio_11	4	IO								
		safe_mode	7	-								
Y14	NA	jtag_emu1	0	IO	H	H	0	vdds	Yes	4	PU/ PD	LVCMOS
		gpio_31	4	IO								
		safe_mode	7	-								
U3	NA	mcbsp3_clkx	0	IO	L	L	7	vdds	Yes	4	PU/ PD	LVCMOS
		uart2_tx	1	O								
		gpio_142	4	IO								
		safe_mode	7	-								
N3	NA	mcbsp3_dr	0	I	L	L	7	vdds	Yes	4	PU/ PD	LVCMOS
		uart2_rts	1	O								
		gpio_141	4	IO								
		safe_mode	7	-								
P3	NA	mcbsp3_dx	0	IO	L	L	7	vdds	Yes	4	PU/ PD	LVCMOS
		uart2_cts	1	I								
		gpio_140	4	IO								
		safe_mode	7	-								
W3	NA	mcbsp3_fsx	0	IO	L	L	7	vdds	Yes	4	PU/ PD	LVCMOS
		uart2_rx	1	I								
		gpio_143	4	IO								
		safe_mode	7	-								
V3	NA	mcbsp4_clkx	0	IO	L	L	7	vdds	Yes	4	PU/ PD	LVCMOS
		gpio_152	4	IO								
		mm3_txse0	6	IO								
		safe_mode	7	-								
U4	NA	mcbsp4_dr	0	I	L	L	7	vdds	Yes	4	PU/ PD	LVCMOS
		gpio_153	4	IO								
		mm3_rxrcv	6	IO								
		safe_mode	7	-								
R3	NA	mcbsp4_dx	0	IO	L	L	7	vdds	Yes	4	PU/ PD	LVCMOS
		gpio_154	4	IO								
		mm3_txdat	6	IO								
		safe_mode	7	-								
T3	NA	mcbsp4_fsx	0	IO	L	L	7	vdds	Yes	4	PU/ PD	LVCMOS
		gpio_155	4	IO								
		mm3_txen_n	6	IO								
		safe_mode	7	-								
M3	NA	mmc2_dat5	0	IO	L	L	7	vdds	Yes	4	PU/ PD	LVCMOS
		mmc2_dir_dat1	1	O								
		cam_global_reset	2	IO								
		mmc3_dat1	3	IO								

Copyright © 2010–2011, Texas Instruments Incorporated

Table 2-2. Ball Characteristics (CBC Pkg.)[5] (continued)

BALL BOTTOM [1]	BALL TOP [1]	PIN NAME [2]	MODE [3]	TYPE [4]	BALL RESET STATE [5]	BALL RESET REL. STATE [6]	RESET REL. MODE [7]	POWER [8]	HYS [9]	BUFFER STRENGTH (mA) [10]	PULLUP /DOWN TYPE [11]	IO CELL [12]
		gpio_137	4	IO								
		mm3_rxdp	6	IO								
		safe_mode	7	-								
L3	NA	mmc2_dat6	0	IO	L	L	7	vdds	Yes	4	PU/ PD	LVCMOS
		mmc2_dir_cmd	1	O								
		cam_shutter	2	O								
		mmc3_dat2	3	IO								
		gpio_138	4	IO								
		safe_mode	7	-								
K3	NA	mmc2_dat7	0	IO	L	L	7	vdds	Yes	4	PU/ PD	LVCMOS
		mmc2_clkin	1	I								
		mmc3_dat3	3	IO								
		gpio_139	4	IO								
		mm3_rxdm	6	IO								
		safe_mode	7	-								
W2	NA	uart1_cts	0	I	L	L	7	vdds	Yes	4	PU/ PD	LVCMOS
		gpio_150	4	IO								
		safe_mode	7	-								
AC16	NA	vss	0	GND								
AD18	NA	vdds	0	PWR								
L19	NA	vss	0	GND								
AC19	NA	vss	0	GND								
AD19	NA	vdds	0	PWR								
L20	NA	vdds	0	PWR								
P23	NA	vdds_x	0	PWR								
AE19	NA	cap_vddu_array	0	PWR								
AC21, D15, G11, G18, H20, M7, M17, R20, T7, Y8, Y12	NA	vdd_core	0	PWR	-	-	-	-	-	-	-	-
D13, G9, G12, H7, K11, L9, M9, M10, N7, N8, P10, U7, U11, U13, V7, V11, W9, Y9, Y11	NA	vdd_mpu_iva	0	PWR	-	-	-	-	-	-	-	-
A18, AC7, AC15, AC18, AC24, AD20, AE10, C11, D9, E24, G4, J15, J18, L7, L24, M4, T4, T24, W24, Y4, AB24	A3, A15, B5, F2, F21, L20, W21	vdds	0	PWR	-	-	-	-	-	-	-	-
U12	NA	vdds_sram	0	PWR	-	-	-	-	-	-	-	-
K13	NA	vdda_dplls_dll	0	PWR	-	-	-	-	-	-	-	-
U14	NA	vdda_dpll_per	0	PWR	-	-	-	-	-	-	-	-
W14	NA	vdda_wkup_bg_bb	0	PWR	-	-	-	-	-	-	-	-
N23	NA	vdds_mmc1	0	PWR	-	-	-	-	-	-	-	-
V25	NA	vdda_dac	0	PWR	-	-	-	-	-	-	-	-
V24	NA	vssa_dac	0	GND	-	-	-	-	-	-	-	-

Copyright © 2010–2011, Texas Instruments Incorporated

Table 2-2. Ball Characteristics (CBC Pkg.)[5] (continued)

BALL BOTTOM [1]	BALL TOP [1]	PIN NAME [2]	MODE [3]	TYPE [4]	BALL RESET STATE [5]	BALL RESET REL. STATE [6]	RESET REL. MODE [7]	POWER [8]	HYS [9]	BUFFER STRENGTH (mA) [10]	PULLUP /DOWN TYPE [11]	IO CELL [12]
A6, A8, A13, AB5, AB22, AC10, AD14, AD25, AE7, B2, B25, C12, D7, D10, D12, D14, D18, D20, E22, G1, G8, G10, G20, G23, H4, K1, K15, K25, L10, L17, L23, N4, N10, N17, R1, R4, R17, T23, U25, W1, W4, W23, Y7, Y10, Y16, Y26	A7, A13, B14, C1, F1, F20, H2, H20, L21, M2, P20, R2, W20 Y6, Y11, AA7, AA16	vss	0	GND	-	-	-	-	-	-	-	-
K14	NA	cap_vddu_wkup_logic	0	PWR	-	-	-	-	-	-	-	-
A1, L1, T2, Y2, AE2, AF4, AF5, AF8, AF10, AF12, AF13, AF14, AF15, AF17, AF16, A20, AF21, AF18, AF24, AF22, A25, AE25, AF25, A26, B26, K26, U26, AE26, AF26	A1, J1, N2, T2, W2, Y2, AA6, Y7, Y9, AA10, AA11, AA12, AA13, Y14, AA14, B16, Y17, AA17, Y19, AA19, A20, Y20, AA20, A21, B21, H21, P21, Y21, AA21	Feed-Through Pins[4]	-	-	-	-	-	-	-	-	-	-

Copyright © 2010–2011, Texas Instruments Incorporated

Table 2-2. Ball Characteristics (CBC Pkg.)[5] (continued)

BALL BOTTOM [1]	BALL TOP [1]	PIN NAME [2]	MODE [3]	TYPE [4]	BALL RESET STATE [5]	BALL RESET REL. STATE [6]	RESET REL. MODE [7]	POWER [8]	HYS [9]	BUFFER STRENGTH (mA) [10]	PULLUP /DOWN TYPE [11]	IO CELL [12]
A2, AF1, B1,D5, K23, A5, A7, A9, A10, A11, A12, A14, A15, A16, A17, A19, A21, A22, AA23, AB23, AC9, AC12, AC13, AC14, AC17, AC20, AC22, AC23, AD9, AD11, AD12, AD13, AE1, AE8, AE11, AE12, AE13, AF2, AF3, AF11, B7, B8, B9, B10, B11, B12, B13, B14, B15, B16, B17, B18, B19, B20, B21, B22, C7, C8, C9, C10, C13, C14, C15, C16, C17 C18, C19, C20, C21, C22, D8, D11, D16, D17, D19, D21, D22, E23, F4, G7, G13, G14, G15, G16, G17, G19, H8, H9, H10, H11, H12, H13, H14, H15, H16, H17, H18, H19, H23, J3, J4, J7, J8, J9, J10, J11, J12, J13, J14, J16, J17, J19, J20, K4, K7, K8, K9, K10, K12, K16, K17, K19, L8, M8, M23, N18, P2, P4, P24, R23, R24, R25, R26, T25, T26, U23, V4, W12, Y23	A2, AA1, AA2,B1, B2, B20, Y1	No Connect[2]	-	-	-	-	-	-	-	-	-	-
AF23	NA	sys_xtalgnd	0	GND								
A4	NA	gpmc_a11	0	O	L	L	7	vdds	Yes	8	PU/PD	LVCMOS
		safe_mode	7									
D6	NA	cap_vdd_bb_mpu_iva	0	PWR								
N9	NA	cap_vdd_sram_mpu_iva	0	PWR								
K20	NA	cap_vdd_sram_core	0	PWR								

(1) The drive strength of these IOs is set according to the programmable load range: 2 pF to 4 pF per default or 4 pF to 12 pF. For a full description of the drive strength programming, see the System Control Module chapter of the *AM/DM37x Multimedia Device Technical Reference Manual* (literature number SPRUGN4).

(2) Pins labeled as "No connect" must be left unconnected. Any connections to these pins may result in unpredictable behavior.

(3) PU = [50 to 100 kΩ] per default or [10 to 50 kΩ] according to the selected mode.
For a full description of the pull-up drive strength programming, see the PRG_SDMMC_PUSTRENGTH configuration register bit field in the System Control Module chapter of the *AM/DM37x Multimedia Device Technical Reference Manual* (literature number SPRUGN4).
PD: 30 to 150 kΩ.

(4) These signals are feed-through balls. For more information, see Table 2-27.

(5) NA in this table stands for "Not Applicable".

(6) In the safe_mode_out1, the buffer is configured to drive 1.

(7) Depending on the sys_clkreq direction the corresponding reset released state value can be:
- Z if sys_clkreq is used as input
- 1 if sys_clkreq is used as output

For a full description of the sys_clkreq control, see Power, Reset, and Clock Management chapter of the *AM/DM37x Multimedia Device Technical Reference Manual* (literature number SPRUGN4).

(8) The usage of this GPIO is strongly restricted. For more information, see the General-Purpose Interface chapter of the *AM/DM37x Multimedia Device Technical Reference Manual* (literature number SPRUGN4).

(9) The pullup and pulldown can be either the standard LVCMOS 100-µA drive strength or the I2C pullup and pulldown described as follows: Nominal resistance = 1.66 kΩ in high-speed mode with a load range of 5 pF to 12 pF, 4.5 kΩ in standard / fast mode with a load range of 5 pF to 15 pF.

(10) The default buffer configuration is High-Speed I2C point-to-point mode using internal pullup. For a full description of the pull drive strength programming, see prg_i2c1_pullupresx, prg_i2c1_lb1lb0, and prg_sr_pullupresx, prg_sr_lb bits of the CONTROL_PROG_IO1, CONTROL_PROG_IO_WKUP1 control modules in the System Control Module chapter of the *AM/DM37x Multimedia Device Technical Reference Manual* (literature number SPRUGN4) to modify the IO settings if required by the targeted interface application.

(11) The default buffer configuration is standard LVCMOS mode (non-I2C). For a full description of the pull drive strength programming, see PADCONFS bits of CONTROL_PADCONF_X control modules (standard LVCMOS mode), or prg_i2c2_pullupresx, prg_i2c2_lb1lb0, and prg_i2c3_pullupresx, prg_i2c3_lb1lb0 bits of the CONTROL_PROG_IO2, CONTROL_PROG_IO3 control modules (I2C mode) in the System Control Module chapter of the *AM/DM37x Multimedia Device Technical Reference Manual* (literature number SPRUGN4) to modify the IO settings if required by the targeted interface application.

(12) Mux0 if sys_boot6 is pulled down (clock master).

(13) If MMC1 functional signals are enabled, vdds_mmc1 for MMC1 must be supplied by a dedicated power source.
If MMC1 functional signals are disabled, other multiplexed CMOS signals of the interface can be enabled. The interface can be supplied by the same power source as vdds. The vdds power source supplies the vdds_mmc1 ball.
If neither MMC1 functional balls or CMOS signals are enabled, the interface balls are left unconnected with its associated power supply (vdda/vssa) grounded.
For the corresponding setting of the PBIASLITEPWRDNZ0 bit, see the System Control Module / SCM Programming Model / Extended-Drain I/Os and PBIAS Cells Programming Guide section of the *AM/DM37x Multimedia Device Technical Reference Manual* (literature number SPRUGN4).

Table 2-3. Ball Characteristics (CUS Pkg.)[1]

BALL NUMBER [1]	PIN NAME [2]	MODE [3]	TYPE [4]	BALL RESET STATE [5]	BALL RESET REL. STATE [6]	RESET REL. MODE [7]	POWER [8]	HYS [9]	BUFFER STRENGTH (mA) [10]	PULLUP /DOWN TYPE [11]	IO CELL [12]
D7	sdrc_d0	0	IO	L	Z	0	vdds_mem	Yes	4[8]	PU/ PD	LVCMOS
C5	sdrc_d1	0	IO	L	Z	0	vdds_mem	Yes	4[8]	PU/ PD	LVCMOS
C6	sdrc_d2	0	IO	L	Z	0	vdds_mem	Yes	4[8]	PU/ PD	LVCMOS
B5	sdrc_d3	0	IO	L	Z	0	vdds_mem	Yes	4[8]	PU/ PD	LVCMOS
D9	sdrc_d4	0	IO	L	Z	0	vdds_mem	Yes	4[8]	PU/ PD	LVCMOS
D10	sdrc_d5	0	IO	L	Z	0	vdds_mem	Yes	4[8]	PU/ PD	LVCMOS
C7	sdrc_d6	0	IO	L	Z	0	vdds_mem	Yes	4[8]	PU/ PD	LVCMOS
B7	sdrc_d7	0	IO	L	Z	0	vdds_mem	Yes	4[8]	PU/ PD	LVCMOS
B11	sdrc_d8	0	IO	L	Z	0	vdds_mem	Yes	4[8]	PU/ PD	LVCMOS
C12	sdrc_d9	0	IO	L	Z	0	vdds_mem	Yes	4[8]	PU/ PD	LVCMOS
B12	sdrc_d10	0	IO	L	Z	0	vdds_mem	Yes	4[8]	PU/ PD	LVCMOS
D13	sdrc_d11	0	IO	L	Z	0	vdds_mem	Yes	4[8]	PU/ PD	LVCMOS
C13	sdrc_d12	0	IO	L	Z	0	vdds_mem	Yes	4[8]	PU/ PD	LVCMOS
B14	sdrc_d13	0	IO	L	Z	0	vdds_mem	Yes	4[8]	PU/ PD	LVCMOS
A14	sdrc_d14	0	IO	L	Z	0	vdds_mem	Yes	4[8]	PU/ PD	LVCMOS
B15	sdrc_d15	0	IO	L	Z	0	vdds_mem	Yes	4[8]	PU/ PD	LVCMOS
C9	sdrc_d16	0	IO	L	Z	0	vdds_mem	Yes	4[8]	PU/ PD	LVCMOS

Copyright © 2010–2011, Texas Instruments Incorporated

Table 2-3. Ball Characteristics (CUS Pkg.)[1] (continued)

BALL NUMBER [1]	PIN NAME [2]	MODE [3]	TYPE [4]	BALL RESET STATE [5]	BALL RESET REL. STATE [6]	RESET REL. MODE [7]	POWER [8]	HYS [9]	BUFFER STRENGTH (mA) [10]	PULLUP /DOWN TYPE [11]	IO CELL [12]
E12	sdrc_d17	0	IO	L	Z	0	vdds_mem	Yes	4[8]	PU/ PD	LVCMOS
B8	sdrc_d18	0	IO	L	Z	0	vdds_mem	Yes	4[8]	PU/ PD	LVCMOS
B9	sdrc_d19	0	IO	L	Z	0	vdds_mem	Yes	4[8]	PU/ PD	LVCMOS
C10	sdrc_d20	0	IO	L	Z	0	vdds_mem	Yes	4[8]	PU/ PD	LVCMOS
B10	sdrc_d21	0	IO	L	Z	0	vdds_mem	Yes	4[8]	PU/ PD	LVCMOS
D12	sdrc_d22	0	IO	L	Z	0	vdds_mem	Yes	4[8]	PU/ PD	LVCMOS
E13	sdrc_d23	0	IO	L	Z	0	vdds_mem	Yes	4[8]	PU/ PD	LVCMOS
E15	sdrc_d24	0	IO	L	Z	0	vdds_mem	Yes	4[8]	PU/ PD	LVCMOS
D15	sdrc_d25	0	IO	L	Z	0	vdds_mem	Yes	4[8]	PU/ PD	LVCMOS
C15	sdrc_d26	0	IO	L	Z	0	vdds_mem	Yes	4[8]	PU/ PD	LVCMOS
B16	sdrc_d27	0	IO	L	Z	0	vdds_mem	Yes	4[8]	PU/ PD	LVCMOS
C16	sdrc_d28	0	IO	L	Z	0	vdds_mem	Yes	4[8]	PU/ PD	LVCMOS
D16	sdrc_d29	0	IO	L	Z	0	vdds_mem	Yes	4[8]	PU/ PD	LVCMOS
B17	sdrc_d30	0	IO	L	Z	0	vdds_mem	Yes	4[8]	PU/ PD	LVCMOS
B18	sdrc_d31	0	IO	L	Z	0	vdds_mem	Yes	4 [8]	PU/ PD	LVCMOS
C18	sdrc_ba0	0	O	0	0	0	vdds_mem	NA	4[8]	PU/ PD	LVCMOS
D18	sdrc_ba1	0	O	0	0	0	vdds_mem	NA	4[8]	PU/ PD	LVCMOS
A4	sdrc_a0	0	O	0	0	0	vdds_mem	NA	4[8]	PU/ PD	LVCMOS
B4	sdrc_a1	0	O	0	0	0	vdds_mem	NA	4 [8]	PU/ PD	LVCMOS
D6	sdrc_a2	0	O	0	0	0	vdds_mem	NA	4[8]	PU/ PD	LVCMOS
B3	sdrc_a3	0	O	0	0	0	vdds_mem	NA	4[8]	PU/ PD	LVCMOS
B2	sdrc_a4	0	O	0	0	0	vdds_mem	NA	4[8]	PU/ PD	LVCMOS
C3	sdrc_a5	0	O	0	0	0	vdds_mem	NA	4[8]	PU/ PD	LVCMOS
E3	sdrc_a6	0	O	0	0	0	vdds_mem	NA	4 [8]	PU/ PD	LVCMOS
F6	sdrc_a7	0	O	0	0	0	vdds_mem	NA	4[8]	PU/ PD	LVCMOS
E10	sdrc_a8	0	O	0	0	0	vdds_mem	NA	4[8]	PU/ PD	LVCMOS
E9	sdrc_a9	0	O	0	0	0	vdds_mem	NA	4[8]	PU/ PD	LVCMOS
E7	sdrc_a10	0	O	0	0	0	vdds_mem	NA	4[8]	PU/ PD	LVCMOS
G6	sdrc_a11	0	O	0	0	0	vdds_mem	NA	4[8]	PU/ PD	LVCMOS
G7	sdrc_a12	0	O	0	0	0	vdds_mem	NA	4[8]	PU/ PD	LVCMOS
F7	sdrc_a13	0	O	0	0	0	vdds_mem	NA	4[8]	PU/ PD	LVCMOS
F9	sdrc_a14	0	O	0	0	0	vdds_mem	NA	4[8]	PU/ PD	LVCMOS
A19	sdrc_ncs0	0	O	1	1	0	vdds_mem	NA	4[8]	PU/ PD	LVCMOS
B19	sdrc_ncs1	0	O	1	1	0	vdds_mem	NA	4[8]	PU/ PD	LVCMOS
A10	sdrc_clk	0	IO	L	0	0	vdds_mem	Yes	4[8]	PU/ PD	LVCMOS
A11	sdrc_nclk	0	O	1	1	0	vdds_mem	NA	4[8]	PU/ PD	LVCMOS
B20	sdrc_cke0	0	O	H	1	7	vdds_mem	NA	4[8]	PU/ PD	LVCMOS
	safe_mode_out1[9]	7									
C20	sdrc_cke1	0	O	H	1	7	vdds_mem	NA	4[8]	PU/ PD	LVCMOS
	safe_mode_out1[9]	7									
D19	sdrc_nras	0	O	1	1	0	vdds_mem	NA	4[8]	PU/ PD	LVCMOS
C19	sdrc_ncas	0	O	1	1	0	vdds_mem	NA	4[8]	PU/ PD	LVCMOS
A20	sdrc_nwe	0	O	1	1	0	vdds_mem	NA	4 [8]	PU/ PD	LVCMOS
B6	sdrc_dm0	0	O	0	0	0	vdds_mem	NA	4[8]	PU/ PD	LVCMOS
B13	sdrc_dm1	0	O	0	0	0	vdds_mem	NA	4[8]	PU/ PD	LVCMOS
A7	sdrc_dm2	0	O	0	0	0	vdds_mem	NA	4[8]	PU/ PD	LVCMOS
A16	sdrc_dm3	0	O	0	0	0	vdds_mem	NA	4[8]	PU/ PD	LVCMOS
A5	sdrc_dqs0	0	IO	L	Z	0	vdds_mem	Yes	4[8]	PU/ PD	LVCMOS
A13	sdrc_dqs1	0	IO	L	Z	0	vdds_mem	Yes	4[8]	PU/ PD	LVCMOS
A8	sdrc_dqs2	0	IO	L	Z	0	vdds_mem	Yes	4[8]	PU/ PD	LVCMOS
A17	sdrc_dqs3	0	IO	L	Z	0	vdds_mem	Yes	4[8]	PU/ PD	LVCMOS
K4	gpmc_a1	0	O	L	L	7	vdds_mem	Yes	8	PU/ PD	LVCMOS
	gpio_34	4	IO								
	safe_mode	7									
K3	gpmc_a2	0	O	L	L	7	vdds_mem	Yes	8	PU/ PD	LVCMOS

Copyright © 2010–2011, Texas Instruments Incorporated

Table 2-3. Ball Characteristics (CUS Pkg.)[1] (continued)

BALL NUMBER [1]	PIN NAME [2]	MODE [3]	TYPE [4]	BALL RESET STATE [5]	BALL RESET REL. STATE [6]	RESET REL. MODE [7]	POWER [8]	HYS [9]	BUFFER STRENGTH (mA) [10]	PULLUP /DOWN TYPE [11]	IO CELL [12]
	gpio_35	4	IO								
	safe_mode	7									
K2	gpmc_a3	0	O	L	L	7	vdds_mem	Yes	8	PU/ PD	LVCMOS
	gpio_36	4	IO								
	safe_mode	7									
J4	gpmc_a4	0	O	L	L	7	vdds_mem	Yes	8	PU/ PD	LVCMOS
	gpio_37	4	IO								
	safe_mode	7									
J3	gpmc_a5	0	O	L	L	7	vdds_mem	Yes	8	PU/ PD	LVCMOS
	gpio_38	4	IO								
	safe_mode	7									
J2	gpmc_a6	0	O	H	H	7	vdds_mem	Yes	8	PU/ PD	LVCMOS
	gpio_39	4	IO								
	safe_mode	7									
J1	gpmc_a7	0	O	H	H	7	vdds_mem	Yes	8	PU/ PD	LVCMOS
	gpio_40	4	IO								
	safe_mode	7									
H1	gpmc_a8	0	O	H	H	7	vdds_mem	Yes	8	PU/ PD	LVCMOS
	gpio_41	4	IO								
	safe_mode	7									
H2	gpmc_a9	0	O	H	H	7	vdds_mem	Yes	8	PU/ PD	LVCMOS
	sys_ndmareq2	1	I								
	gpio_42	4	IO								
	safe_mode	7									
G2	gpmc_a10	0	O	H	H	7	vdds_mem	Yes	8	PU/ PD	LVCMOS
	sys_ndmareq3	1	I								
	gpio_43	4	IO								
	safe_mode	7									
L2	gpmc_d0	0	IO	H	H	0	vdds_mem	Yes	8	PU/ PD	LVCMOS
M1	gpmc_d1	0	IO	H	H	0	vdds_mem	Yes	8	PU/ PD	LVCMOS
M2	gpmc_d2	0	IO	H	H	0	vdds_mem	Yes	8	PU/ PD	LVCMOS
N2	gpmc_d3	0	IO	H	H	0	vdds_mem	Yes	8	PU/ PD	LVCMOS
M3	gpmc_d4	0	IO	H	H	0	vdds_mem	Yes	8	PU/ PD	LVCMOS
P1	gpmc_d5	0	IO	H	H	0	vdds_mem	Yes	8	PU/ PD	LVCMOS
P2	gpmc_d6	0	IO	H	H	0	vdds_mem	Yes	8	PU/ PD	LVCMOS
R1	gpmc_d7	0	IO	H	H	0	vdds_mem	Yes	8	PU/ PD	LVCMOS
R2	gpmc_d8	0	IO	H	H	0	vdds_mem	Yes	8	PU/ PD	LVCMOS
	gpio_44	4	IO								
	safe_mode	7									
T2	gpmc_d9	0	IO	H	H	0	vdds_mem	Yes	8	PU/ PD	LVCMOS
	gpio_45	4	IO								
	safe_mode	7									
U1	gpmc_d10	0	IO	H	H	0	vdds_mem	Yes	8	PU/ PD	LVCMOS
	gpio_46	4	IO								
	safe_mode	7									
R3	gpmc_d11	0	IO	H	H	0	vdds_mem	Yes	8	PU/ PD	LVCMOS
	gpio_47	4	IO								
	safe_mode	7									
T3	gpmc_d12	0	IO	H	H	0	vdds_mem	Yes	8	PU/ PD	LVCMOS
	gpio_48	4	IO								
	safe_mode	7									
U2	gpmc_d13	0	IO	H	H	0	vdds_mem	Yes	8	PU/ PD	LVCMOS
	gpio_49	4	IO								
	safe_mode	7									
V1	gpmc_d14	0	IO	H	H	0	vdds_mem	Yes	8	PU/ PD	LVCMOS

Copyright © 2010–2011, Texas Instruments Incorporated

Table 2-3. Ball Characteristics (CUS Pkg.)[(1)] (continued)

BALL NUMBER [1]	PIN NAME [2]	MODE [3]	TYPE [4]	BALL RESET STATE [5]	BALL RESET REL. STATE [6]	RESET REL. MODE [7]	POWER [8]	HYS [9]	BUFFER STRENGTH (mA) [10]	PULLUP /DOWN TYPE [11]	IO CELL [12]
	gpio_50	4	IO								
	safe_mode	7									
V2	gpmc_d15	0	IO	H	H	0	vdds_mem	Yes	8	PU/ PD	LVCMOS
	gpio_51	4	IO								
	safe_mode	7									
E2	gpmc_ncs0	0	O	1	1	0	vdds_mem	NA	8	NA	LVCMOS
D2	gpmc_ncs3	0	O	H	H	7	vdds_mem	Yes	8	PU/ PD	LVCMOS
	sys_ndmareq0	1	I								
	gpio_54	4	IO								
	safe_mode	7									
F4	gpmc_ncs4	0	O	H	H	7	vdds_mem	Yes	8	PU/ PD	LVCMOS
	sys_ndmareq1	1	I								
	mcbsp4_ clkx	2	IO								
	gpt_9_pwm_evt	3	IO								
	gpio_55	4	IO								
	safe_mode	7									
G5	gpmc_ncs5	0	O	H	H	7	vdds_mem	Yes	8	PU/ PD	LVCMOS
	sys_ndmareq2	1	I								
	mcbsp4_dr	2	I								
	gpt_10_pwm_evt	3	IO								
	gpio_56	4	IO								
	safe_mode	7									
F3	gpmc_ncs6	0	O	H	H	7	vdds_mem	Yes	8	PU/ PD	LVCMOS
	sys_ndmareq3	1	I								
	mcbsp4_dx	2	IO								
	gpt_11_pwm_evt	3	IO								
	gpio_57	4	IO								
	safe_mode	7									
G4	gpmc_ncs7	0	O	H	H	7	vdds_mem	Yes	8	PU/ PD	LVCMOS
	gpmc_io_dir	1	O								
	mcbsp4_fsx	2	IO								
	gpt_8_pwm_evt	3	IO								
	gpio_58	4	IO								
	safe_mode	7									
W2	gpmc_clk	0	O	L	0	0	vdds_mem	Yes	8	PU/ PD	LVCMOS
	gpio_59	4	IO								
	safe_mode	7									
F1	gpmc_nadv_ale	0	O	0	0	0	vdds_mem	NA	8	PU/ PD	LVCMOS
F2	gpmc_noe	0	O	1	1	0	vdds_mem	NA	8	PU/ PD	LVCMOS
G3	gpmc_nwe	0	O	1	1	0	vdds_mem	NA	8	PU/ PD	LVCMOS
K5	gpmc_nbe0_cle	0	O	L	0	0	vdds_mem	Yes	8	PU/ PD	LVCMOS
	gpio_60	4	IO								
	safe_mode	7									
L1	gpmc_nbe1	0	O	L	L	7	vdds_mem	Yes	8	PU/ PD	LVCMOS
	gpio_61	4	IO								
	safe_mode	7									
E1	gpmc_nwp	0	O	L	0	0	vdds_mem	Yes	8	PU/ PD	LVCMOS
	gpio_62	4	IO								
	safe_mode	7									
C1	gpmc_wait0	0	I	H	H	0	vdds_mem	Yes	NA	PU/ PD	LVCMOS
C2	gpmc_wait3	0	I	H	H	7	vdds_mem	Yes	8	PU/ PD	LVCMOS
	sys_ndmareq1	1	I								
	uart4_rx	2	I								
	gpio_65	4	IO								
	safe_mode	7									

Copyright © 2010–2011, Texas Instruments Incorporated

Table 2-3. Ball Characteristics (CUS Pkg.)[(1)] (continued)

BALL NUMBER [1]	PIN NAME [2]	MODE [3]	TYPE [4]	BALL RESET STATE [5]	BALL RESET REL. STATE [6]	RESET REL. MODE [7]	POWER [8]	HYS [9]	BUFFER STRENGTH (mA) [10]	PULLUP /DOWN TYPE [11]	IO CELL [12]
G22	dss_pclk	0	O	H	H	7	vdds	Yes	8	PU/ PD	LVCMOS
	gpio_66	4	IO								
	hw_dbg12	5	O								
	safe_mode	7									
E22	dss_hsync	0	O	H	H	7	vdds	Yes	8	PU/ PD	LVCMOS
	gpio_67	4	IO								
	hw_dbg13	5	O								
	safe_mode	7									
F22	dss_vsync	0	O	H	H	7	vdds	Yes	8	PU/ PD	LVCMOS
	gpio_68	4	IO								
	safe_mode	7									
J21	dss_acbias	0	O	L	L	7	vdds	Yes	8	PU/ PD	LVCMOS
	gpio_69	4	IO								
	safe_mode	7									
AC19	dss_data0	0	IO	L	L	7	vdds	Yes	8	PU/ PD	LVCMOS
	uart1_cts	2	I						NA		
	gpio_70	4	IO						8		
	safe_mode	7							8		
AB19	dss_data1	0	IO	L	L	7	vdds	Yes	8	PU/ PD	LVCMOS
	uart1_rts	2	O						8		
	gpio_71	4	IO						8		
	safe_mode	7							8		
AD20	dss_data2	0	IO	L	L	7	vdds	Yes	8	PU/ PD	LVCMOS
	gpio_72	4	IO						8		
	safe_mode	7							8		
AC20	dss_data3	0	IO	L	L	7	vdds	Yes	8	PU/ PD	LVCMOS
	gpio_73	4	IO						8		
	safe_mode	7							8		
AD21	dss_data4	0	IO	L	L	7	vdds	Yes	8	PU/ PD	LVCMOS
	uart3_rx_ irrx	2	I						NA		
	gpio_74	4	IO						8		
	safe_mode	7							8		
AC21	dss_data5	0	IO	L	L	7	vdds	Yes	8	PU/ PD	LVCMOS
	uart3_tx_ irtx	2	O						8		
	gpio_75	4	IO						8		
	safe_mode	7							8		
D24	dss_data6	0	IO	L	L	7	vdds	Yes	8	PU/ PD	LVCMOS
	uart1_tx	2	O								
	gpio_76	4	IO								
	hw_dbg14	5	O								
	safe_mode	7									
E23	dss_data7	0	IO	L	L	7	vdds	Yes	8	PU/ PD	LVCMOS
	uart1_rx	2	I								
	gpio_77	4	IO								
	hw_dbg15	5	O								
	safe_mode	7									
E24	dss_data8	0	IO	L	L	7	vdds	Yes	8	PU/ PD	LVCMOS
	uart3_rx_irrx	2	I								
	gpio_78	4	IO								
	hw_dbg16	5	O								
	safe_mode	7									
F23	dss_data9	0	IO	L	L	7	vdds	Yes	8	PU/ PD	LVCMOS
	uart3_tx_irtx	2	O								
	gpio_79	4	IO								
	hw_dbg17	5	O								

Copyright © 2010–2011, Texas Instruments Incorporated

Table 2-3. Ball Characteristics (CUS Pkg.)[1] (continued)

BALL NUMBER [1]	PIN NAME [2]	MODE [3]	TYPE [4]	BALL RESET STATE [5]	BALL RESET REL. STATE [6]	RESET REL. MODE [7]	POWER [8]	HYS [9]	BUFFER STRENGTH (mA) [10]	PULLUP /DOWN TYPE [11]	IO CELL [12]
	safe_mode	7									
AC22	dss_data10	0	IO	L	L	7	vdds	Yes	8	PU/ PD	LVCMOS
	gpio_80	4	IO								
	safe_mode	7									
AC23	dss_data11	0	IO	L	L	7	vdds	Yes	8	PU/ PD	LVCMOS
	gpio_81	4	IO								
	safe_mode	7									
AB22	dss_data12	0	IO	L	L	7	vdds	Yes	8	PU/ PD	LVCMOS
	gpio_82	4	IO								
	safe_mode	7									
Y22	dss_data13	0	IO	L	L	7	vdds	Yes	8	PU/ PD	LVCMOS
	gpio_83	4	IO								
	safe_mode	7									
W22	dss_data14	0	IO	L	L	7	vdds	Yes	8	PU/ PD	LVCMOS
	gpio_84	4	IO								
	safe_mode	7									
V22	dss_data15	0	IO	L	L	7	vdds	Yes	8	PU/ PD	LVCMOS
	gpio_85	4	IO								
	safe_mode	7									
J22	dss_data16	0	IO	L	L	7	vdds	Yes	8	PU/ PD	LVCMOS
	gpio_86	4	IO								
	safe_mode	7									
G23	dss_data17	0	IO	L	L	7	vdds	Yes	8	PU/ PD	LVCMOS
	gpio_87	4	IO								
	safe_mode	7									
G24	dss_data18	0	IO	L	L	7	vdds	Yes	8	PU/ PD	LVCMOS
	mcspi3_clk	2	IO								
	dss_data0	3	IO								
	gpio_88	4	IO								
	safe_mode	7									
H23	dss_data19	0	IO	L	L	7	vdds	Yes	8	PU/ PD	LVCMOS
	mcspi3_simo	2	IO								
	dss_data1	3	IO								
	gpio_89	4	IO								
	safe_mode	7									
D23	dss_data20	0	O	H	H	7	vdds	Yes	8	PU/ PD	LVCMOS
	mcspi3_somi	2	IO								
	dss_data2	3	IO								
	gpio_90	4	IO								
	safe_mode	7									
K22	dss_data21	0	O	L	L	7	vdds	Yes	8	PU/ PD	LVCMOS
	mcspi3_cs0	2	IO								
	dss_data3	3	IO								
	gpio_91	4	IO								
	safe_mode	7									
V21	dss_data22	0	O	L	L	7	vdds	Yes	8	PU/ PD	LVCMOS
	mcspi3_cs1	2	O								
	dss_data4	3	IO								
	gpio_92	4	IO								
	safe_mode	7									
W21	dss_data23	0	O	L	L	7	vdds	Yes	8	PU/ PD	LVCMOS
	dss_data5	3	IO								
	gpio_93	4	IO								
	safe_mode	7									
AA23	cvideo2_out	0	AO	0	0	0	vdda_dac	NA	NA[6]	NA	10-bit DAC

Table 2-3. Ball Characteristics (CUS Pkg.)[1] (continued)

BALL NUMBER [1]	PIN NAME [2]	MODE [3]	TYPE [4]	BALL RESET STATE [5]	BALL RESET REL. STATE [6]	RESET REL. MODE [7]	POWER [8]	HYS [9]	BUFFER STRENGTH (mA) [10]	PULLUP /DOWN TYPE [11]	IO CELL [12]
AB24	cvideo1_out	0	AO	0	0	0	vdda_dac	NA	NA[6]	NA	10-bit DAC
AB23	cvideo1_vfb	0	AO	0	NA	0	vdda_dac	NA	NA[7]	NA	10-bit DAC
Y23	cvideo2_vfb	0	AO	0	NA	0	vdda_dac	NA	NA[7]	NA	10-bit DAC
Y24	cvideo1_rset	0	AIO	0	NA	0	vdda_dac	No	NA	NA	10-bit DAC
A22	cam_hs	0	IO	L	L	7	vdds	Yes	4	PU/ PD	LVCMOS
	gpio_94	4	IO								
	hw_dbg0	5	O								
	safe_mode	7									
E18	cam_vs	0	IO	L	L	7	vdds	Yes	4	PU/ PD	LVCMOS
	gpio_95	4	IO								
	hw_dbg1	5	O								
	safe_mode	7									
B22	cam_ xclka	0	O	L	L	7	vdds	Yes	4	PU/ PD	LVCMOS
	gpio_96	4	IO								
	safe_mode	7									
J19	cam_pclk	0	I	L	L	7	vdds	Yes	4	PU/ PD	LVCMOS
	gpio_97	4	IO								
	hw_dbg2	5	O								
	safe_mode	7									
H24	cam_fld	0	IO	L	L	7	vdds	Yes	4	PU/ PD	LVCMOS
	cam_global_reset	2	IO								
	hw_dbg3	5	O								
	gpio_98	4	IO								
	safe_mode	7									
AB18	cam_d0	0	I	L	L	7	vdds	Yes	NA	PU/ PD	LVCMOS
	gpio_99	4	I								
	safe_mode	7									
AC18	cam_d1	0	I	L	L	7	vdds	Yes	NA	PU/ PD	LVCMOS
	gpio_100	4	I								
	safe_mode	7									
G19	cam_d2	0	I	L	L	7	vdds	Yes	8	PU/ PD	LVCMOS
	gpio_101	4	IO								
	hw_dbg4	5	O								
	safe_mode	7									
F19	cam_d3	0	I	L	L	7	vdds	Yes	8	PU/ PD	LVCMOS
	gpio_102	4	IO								
	hw_dbg5	5	O								
	safe_mode	7									
G20	cam_d4	0	I	L	L	7	vdds	Yes	8	PU/ PD	LVCMOS
	gpio_103	4	IO								
	hw_dbg6	5	O								
	safe_mode	7									
B21	cam_d5	0	I	L	L	7	vdds	Yes	8	PU/ PD	LVCMOS
	gpio_104	4	IO								
	hw_dbg7	5	O								
	safe_mode	7									
L24	cam_d6	0	I	L	L	7	vdds	Yes	NA	PU/ PD	LVCMOS
	gpio_105	4	I								
	safe_mode	7									
K24	cam_d7	0	I	L	L	7	vdds	Yes	NA	PU/ PD	LVCMOS
	gpio_106	4	I								
	safe_mode	7									
J23	cam_d8	0	I	L	L	7	vdds	Yes	NA	PU/ PD	LVCMOS
	gpio_107	4	I								
	safe_mode	7									

Copyright © 2010–2011, Texas Instruments Incorporated

Table 2-3. Ball Characteristics (CUS Pkg.)[1] (continued)

BALL NUMBER [1]	PIN NAME [2]	MODE [3]	TYPE [4]	BALL RESET STATE [5]	BALL RESET REL. STATE [6]	RESET REL. MODE [7]	POWER [8]	HYS [9]	BUFFER STRENGTH (mA) [10]	PULLUP /DOWN TYPE [11]	IO CELL [12]
K23	cam_d9	0	I	L	L	7	vdds	Yes	NA	PU/ PD	LVCMOS
	gpio_108	4	I								
	safe_mode	7									
F21	cam_d10	0	I	L	L	7	vdds	Yes	8	PU/ PD	LVCMOS
	gpio_109	4	IO								
	hw_dbg8	5	O								
	safe_mode	7									
G21	cam_d11	0	I	L	L	7	vdds	Yes	8	PU/ PD	LVCMOS
	gpio_110	4	IO								
	hw_dbg9	5	O								
	safe_mode	7									
C22	cam_ xclkb	0	O	L	L	7	vdds	Yes	4	PU/ PD	LVCMOS
	gpio_111	4	IO								
	safe_mode	7									
F18	cam_wen	0	I	L	L	7	vdds	Yes	4	PU/ PD	LVCMOS
	cam_ shutter	2	O								
	gpio_167	4	IO								
	hw_dbg10	5	O								
	safe_mode	7									
J20	cam_ strobe	0	O	L	L	7	vdds	Yes	4	PU/ PD	LVCMOS
	gpio_126	4	IO								
	hw_dbg11	5	O								
	safe_mode	7									
V20	mcbsp2_fsx	0	IO	L	L	7	vdds	Yes	4	PU/ PD	LVCMOS
	gpio_116	4	IO								
	safe_mode	7									
T21	mcbsp2_ clkx	0	IO	L	L	7	vdds	Yes	4	PU/ PD	LVCMOS
	gpio_117	4	IO								
	safe_mode	7									
V19	mcbsp2_dr	0	I	L	L	7	vdds	Yes	4	PU/ PD	LVCMOS
	gpio_118	4	IO								
	safe_mode	7									
R20	mcbsp2_dx	0	IO	L	L	7	vdds	Yes	4	PU/ PD	LVCMOS
	gpio_119	4	IO								
	safe_mode	7									
M23	mmc1_clk	0	O	L	L	7	vdds_mmc1[14]	Yes	1	PU/ PD [4]	LVCMOS
	gpio_120 [5]	4	IO								
	safe_mode	7									
L23	mmc1_cmd	0	IO	L	L	7	vdds_mmc1[14]	Yes	1	PU/ PD[4]	LVCMOS
	gpio_121 [5]	4	IO								
	safe_mode	7									
M22	mmc1_dat0	0	IO	L	L	7	vdds_mmc1[14]	Yes	1	PU/ PD[4]	LVCMOS
	gpio_122 [5]	4	IO								
	safe_mode	7									
M21	mmc1_dat1	0	IO	L	L	7	vdds_mmc1[14]	Yes	1	PU/ PD[4]	LVCMOS
	gpio_123[5]	4	IO								
	safe_mode	7									
M20	mmc1_dat2	0	IO	L	L	7	vdds_mmc1[14]	Yes	1	PU/ PD[4]	LVCMOS
	gpio_124[5]	4	IO								
	safe_mode	7									
N23	mmc1_dat3	0	IO	L	L	7	vdds_mmc1[14]	Yes	1	PU/ PD[4]	LVCMOS

Copyright © 2010–2011, Texas Instruments Incorporated

Table 2-3. Ball Characteristics (CUS Pkg.)[1] (continued)

BALL NUMBER [1]	PIN NAME [2]	MODE [3]	TYPE [4]	BALL RESET STATE [5]	BALL RESET REL. STATE [6]	RESET REL. MODE [7]	POWER [8]	HYS [9]	BUFFER STRENGTH (mA) [10]	PULLUP /DOWN TYPE [11]	IO CELL [12]
	gpio_125[5]	4	IO								
	safe_mode	7									
N22	gpio_126[5]	4	IO	L	L	7	vdds_x	Yes	1	PU/ PD[4]	LVCMOS
	safe_mode	7									
P24	gpio_129[5]	4	IO	L	L	7	vdds_x	Yes	1	PU/ PD [4]	LVCMOS
	safe_mode	7									
Y1	mmc2_clk	0	O	L	L	7	vdds	Yes	4	PU/ PD	LVCMOS
	mcspi3_clk	1	IO								
	gpio_130	4	IO								
	safe_mode	7									
AB5	mmc2_cmd	0	IO	H	H	7	vdds	Yes	4	PU/ PD	LVCMOS
	mcspi3_ simo	1	IO								
	gpio_131	4	IO								
	safe_mode	7									
AB3	mmc2_ dat0	0	IO	H	H	7	vdds	Yes	4	PU/ PD	LVCMOS
	mcspi3_ somi	1	IO								
	gpio_132	4	IO								
	safe_mode	7									
Y3	mmc2_ dat1	0	IO	H	H	7	vdds	Yes	4	PU/ PD	LVCMOS
	gpio_133	4	IO								
	safe_mode	7									
W3	mmc2_ dat2	0	IO	H	H	7	vdds	Yes	4	PU/ PD	LVCMOS
	mcspi3_cs1	1	O								
	gpio_134	4	IO								
	safe_mode	7									
V3	mmc2_ dat3	0	IO	H	H	7	vdds	Yes	4	PU/ PD	LVCMOS
	mcspi3_cs0	1	IO								
	gpio_135	4	IO								
	safe_mode	7									
AB2	mmc2_ dat4	0	IO	L	L	7	vdds	Yes	4	PU/ PD	LVCMOS
	mmc2_dir_dat0	1	O								
	mmc3_dat0	3	IO								
	gpio_136	4	IO								
	safe_mode	7									
AA2	mmc2_ dat5	0	IO	L	L	7	vdds	Yes	4	PU/ PD	LVCMOS
	mmc2_dir_dat1	1	O								
	cam_global_reset	2	IO								
	mmc3_dat1	3	IO								
	gpio_137	4	IO								
	mm3_rxdp	6	IO								
	safe_mode	7									
Y2	mmc2_dat6	0	IO	L	L	7	vdds	Yes	4	PU/ PD	LVCMOS
	mmc2_dir_cmd	1	O								
	cam_shutter	2	O								
	mmc3_dat2	3	IO								
	gpio_138	4	IO								
	safe_mode	7									
AA1	mmc2_dat7	0	IO	L	L	7	vdds	Yes	4	PU/ PD	LVCMOS
	mmc2_clkin	1	I								
	mmc3_dat3	3	IO								
	gpio_139	4	IO								
	mm3_rxdm	6	IO								
	safe_mode	7									
V6	mcbsp3_dx	0	IO	L	L	7	vdds	Yes	4	PU/ PD	LVCMOS
	uart2_cts	1	I								

Copyright © 2010–2011, Texas Instruments Incorporated

Table 2-3. Ball Characteristics (CUS Pkg.)[(1)] (continued)

BALL NUMBER [1]	PIN NAME [2]	MODE [3]	TYPE [4]	BALL RESET STATE [5]	BALL RESET REL. STATE [6]	RESET REL. MODE [7]	POWER [8]	HYS [9]	BUFFER STRENGTH (mA) [10]	PULLUP /DOWN TYPE [11]	IO CELL [12]
	gpio_140	4	IO								
	safe_mode	7									
V5	mcbsp3_dr	0	I	L	L	7	vdds	Yes	4	PU/ PD	LVCMOS
	uart2_rts	1	O								
	gpio_141	4	IO								
	safe_mode	7									
W4	mcbsp3_ clkx	0	IO	L	L	7	vdds	Yes	4	PU/ PD	LVCMOS
	uart2_tx	1	O								
	gpio_142	4	IO								
	safe_mode	7									
V4	mcbsp3_fsx	0	IO	L	L	7	vdds	Yes	4	PU/ PD	LVCMOS
	uart2_rx	1	I								
	gpio_143	4	IO								
	safe_mode	7									
W7	uart1_tx	0	O	L	L	7	vdds	Yes	4	PU/ PD	LVCMOS
	gpio_148	4	IO								
	safe_mode	7									
W6	uart1_rts	0	O	L	L	7	vdds	Yes	4	PU/ PD	LVCMOS
	gpio_149	4	IO								
	safe_mode	7									
AC2	uart1_cts	0	I	L	L	7	vdds	Yes	4	PU/ PD	LVCMOS
	gpio_150	4	IO								
	safe_mode	7									
V7	uart1_rx	0	I	L	L	7	vdds	Yes	4	PU/ PD	LVCMOS
	mcbsp1_ clkr	2	IO								
	mcspi4_clk	3	IO								
	gpio_151	4	IO								
	safe_mode	7									
W19	mcbsp1_ clkr	0	IO	L	L	7	vdds	Yes	4	PU/ PD	LVCMOS
	mcspi4_clk	1	IO								
	gpio_156	4	IO								
	safe_mode	7									
AB20	mcbsp1_fsr	0	IO	L	L	7	vdds	Yes	4	PU/ PD	LVCMOS
	cam_global_reset	2	IO								
	gpio_157	4	IO								
	safe_mode	7									
W18	mcbsp1_dx	0	IO	L	L	7	vdds	Yes	4	PU/ PD	LVCMOS
	mcspi4_ simo	1	IO								
	mcbsp3_dx	2	IO								
	gpio_158	4	IO								
	safe_mode	7									
Y18	mcbsp1_dr	0	I	L	L	7	vdds	Yes	4	PU/ PD	LVCMOS
	mcspi4_ somi	1	IO								
	mcbsp3_dr	2	I								
	gpio_159	4	IO								
	safe_mode	7									
AA18	mcbsp_clks	0	I	L	L	7	vdds	Yes	4	PU/ PD	LVCMOS
	cam_ shutter	2	O								
	gpio_160	4	IO								
	uart1_cts	5	I								
	safe_mode	7									
AA19	mcbsp1_fsx	0	IO	L	L	7	vdds	Yes	4	PU/ PD	LVCMOS
	mcspi4_cs0	1	IO								
	mcbsp3_fsx	2	IO								
	gpio_161	4	IO								

Copyright © 2010–2011, Texas Instruments Incorporated

Table 2-3. Ball Characteristics (CUS Pkg.)[(1)] (continued)

BALL NUMBER [1]	PIN NAME [2]	MODE [3]	TYPE [4]	BALL RESET STATE [5]	BALL RESET REL. STATE [6]	RESET REL. MODE [7]	POWER [8]	HYS [9]	BUFFER STRENGTH (mA) [10]	PULLUP /DOWN TYPE [11]	IO CELL [12]
	safe_mode	7									
V18	mcbsp1_ clkx	0	IO	L	L	7	vdds	Yes	4	PU/ PD	LVCMOS
	mcbsp3_ clkx	2	IO								
	gpio_162	4	IO								
	safe_mode	7									
A23	uart3_cts_ rctx	0	IO	H	H	7	vdds	Yes	4	PU/ PD	LVCMOS
	gpio_163	4	IO								
	safe_mode	7									
B23	uart3_rts_ sd	0	O	H	H	7	vdds	Yes	4	PU/ PD	LVCMOS
	gpio_164	4	IO								
	safe_mode	7									
B24	uart3_rx_ irrx	0	I	H	H	7	vdds	Yes	4	PU/ PD	LVCMOS
	gpio_165	4	IO								
	safe_mode	7									
C23	uart3_tx_ irtx	0	O	H	H	7	vdds	Yes	4	PU/ PD	LVCMOS
	gpio_166	4	IO								
	safe_mode	7									
R21	hsusb0_clk	0	I	L	L	7	vdds	Yes	8	PU/ PD	LVCMOS
	gpio_120	4	IO								
	safe_mode	7									
R23	hsusb0_stp	0	O	H	H	7	vdds	Yes	4	PU/ PD	LVCMOS
	gpio_121	4	IO								
	safe_mode	7									
P23	hsusb0_dir	0	I	L	L	7	vdds	Yes	4	PU/ PD	LVCMOS
	gpio_122	4	IO								
	safe_mode	7									
R22	hsusb0_nxt	0	I	L	L	7	vdds	Yes	4	PU/ PD	LVCMOS
	gpio_124	4	IO								
	safe_mode	7									
T24	hsusb0_ data0	0	IO	L	L	7	vdds	Yes	4	PU/ PD	LVCMOS
	uart3_tx_ irtx	2	O								
	gpio_125	4	IO								
	uart2_tx	5	O								
	safe_mode	7									
T23	hsusb0_ data1	0	IO	L	L	7	vdds	Yes	4	PU/ PD	LVCMOS
	uart3_rx_ irrx	2	I								
	gpio_130	4	IO								
	uart2_rx	5	I								
	safe_mode	7									
U24	hsusb0_ data2	0	IO	L	L	7	vdds	Yes	4	PU/ PD	LVCMOS
	uart3_rts_ sd	2	O								
	gpio_131	4	IO								
	uart2_rts	5	O								
	safe_mode	7									
U23	hsusb0_ data3	0	IO	L	L	7	vdds	Yes	4	PU/ PD	LVCMOS
	uart3_cts_ rctx	2	IO								
	gpio_169	4	IO								
	uart2_cts	5	I								
	safe_mode	7									
W24	hsusb0_ data4	0	IO	L	L	7	vdds	Yes	4	PU/ PD	LVCMOS
	gpio_188	4	IO								
	safe_mode	7									
V23	hsusb0_ data5	0	IO	L	L	7	vdds	Yes	4	PU/ PD	LVCMOS
	gpio_189	4	IO								
	safe_mode	7									

Copyright © 2010–2011, Texas Instruments Incorporated

Table 2-3. Ball Characteristics (CUS Pkg.)[1] (continued)

BALL NUMBER [1]	PIN NAME [2]	MODE [3]	TYPE [4]	BALL RESET STATE [5]	BALL RESET REL. STATE [6]	RESET REL. MODE [7]	POWER [8]	HYS [9]	BUFFER STRENGTH (mA) [10]	PULLUP /DOWN TYPE [11]	IO CELL [12]
W23	hsusb0_ data6	0	IO	L	L	7	vdds	Yes	4	PU/ PD	LVCMOS
	gpio_190	4	IO								
	safe_mode	7									
T22	hsusb0_ data7	0	IO	L	L	7	vdds	Yes	4	PU/ PD	LVCMOS
	gpio_191	4	IO								
	safe_mode	7									
K20	i2c1_scl	0	OD	H	H	0	vdds	NA	3	PU/ PD[10][11]	Open Drain
K21	i2c1_sda	0	IOD	H	H	0	vdds	Yes	3	PU/ PD[10][11]	Open Drain
AC15	i2c2_scl	0	OD	H	H	7	vdds	Yes	3	PU/ PD[10][12]	Open Drain
	gpio_168	4	IO						4		
	safe_mode	7									
AC14	i2c2_sda	0	IOD	H	H	7	vdds	Yes	3	PU/ PD[10][12]	Open Drain
	gpio_183	4	IO						4		
	safe_mode	7									
AC13	i2c3_scl	0	OD	H	H	7	vdds	Yes	3	PU/ PD[10][12]	Open Drain
	gpio_184	4	IO						4		
	safe_mode	7									
AC12	i2c3_sda	0	IOD	H	H	7	vdds	Yes	3	PU/ PD[10][12]	Open Drain
	gpio_185	4	IO						4		
	safe_mode	7									
Y16	i2c4_scl	0	OD	H	H	0	vdds	Yes	3	PU/ PD[10][11]	Open Drain
	sys_nvmode1	1	O						4		
	safe_mode	7									
Y15	i2c4_sda	0	IOD	H	H	0	vdds	Yes	3	PU/ PD[10][11]	Open Drain
	sys_nvmode2	1	O						4		
	safe_mode	7									
A24	hdq_sio	0	IOD	H	H	7	vdds	Yes	4	PU/ PD	LVCMOS
	sys_altclk	1	I								
	i2c2_sccbe	2	OD								
	i2c3_sccbe	3	OD								
	gpio_170	4	IO								
	safe_mode	7									
T5	mcspi1_clk	0	IO	L	L	7	vdds	Yes	4	PU/ PD	LVCMOS
	mmc2_dat4	1	IO								
	gpio_171	4	IO								
	safe_mode	7									
R4	mcspi1_ simo	0	IO	L	L	7	vdds	Yes	4	PU/ PD	LVCMOS
	mmc2_dat5	1	IO								
	gpio_172	4	IO								
	safe_mode	7									
T4	mcspi1_ somi	0	IO	L	L	7	vdds	Yes	4	PU/ PD	LVCMOS
	mmc2_dat6	1	IO								
	gpio_173	4	IO								
	safe_mode	7									
T6	mcspi1_cs0	0	IO	H	H	7	vdds	Yes	4	PU/ PD	LVCMOS
	mmc2_dat7	1	IO								
	gpio_174	4	IO								
	safe_mode	7									
R5	mcspi1_cs3	0	O	H	H	7	vdds	Yes	4	PU/ PD	LVCMOS
	hsusb2_ data2	3	IO								
	gpio_177	4	IO								
	mm2_txdat	5	IO								
	safe_mode	7									
N5	mcspi2_clk	0	IO	L	L	7	vdds	Yes	4	PU/ PD	LVCMOS
	hsusb2_ data7	3	IO								

Copyright © 2010–2011, Texas Instruments Incorporated

Table 2-3. Ball Characteristics (CUS Pkg.)[1] (continued)

BALL NUMBER [1]	PIN NAME [2]	MODE [3]	TYPE [4]	BALL RESET STATE [5]	BALL RESET REL. STATE [6]	RESET REL. MODE [7]	POWER [8]	HYS [9]	BUFFER STRENGTH (mA) [10]	PULLUP /DOWN TYPE [11]	IO CELL [12]
	gpio_178	4	IO								
	safe_mode	7									
N4	mcspi2_ simo	0	IO	L	L	7	vdds	Yes	4	PU/ PD	LVCMOS
	gpt_9_pwm_evt	1	IO								
	hsusb2_ data4	3	IO								
	gpio_179	4	IO								
	safe_mode	7									
N3	mcspi2_ somi	0	IO	L	L	7	vdds	Yes	4	PU/ PD	LVCMOS
	gpt_10_pwm_evt	1	IO								
	hsusb2_ data5	3	IO								
	gpio_180	4	IO								
	safe_mode	7									
M5	mcspi2_cs0	0	IO	H	H	7	vdds	Yes	4	PU/ PD	LVCMOS
	gpt_11_pwm_evt	1	IO								
	hsusb2_ data6	3	IO								
	gpio_181	4	IO								
	safe_mode	7									
M4	mcspi2_cs1	0	O	L	L	7	vdds	Yes	4	PU/ PD	LVCMOS
	gpt_8_pwm_evt	1	IO								
	hsusb2_ data3	3	IO								
	gpio_182	4	IO								
	mm2_txen_n	5	IO								
	safe_mode	7									
AA16	sys_32k	0	I	Z	Z	0	vdds	Yes	NA	PU/ PD	LVCMOS
AD15	sys_xtalin	0	AI	Z	Z	0	vdds	Yes	NA	No	Analog
AD14	sys_xtalout	0	AO	Z	0	0	vdds	NA	NA	NA	Analog
Y13	sys_clkreq	0	IO	0	see [3]	0	vdds	Yes	4	PU/ PD	LVCMOS
	gpio_1	4	IO								
	safe_mode	7									
W16	sys_nirq	0	I	H	H	7	vdds	Yes	4	PU/ PD	LVCMOS
	gpio_0	4	IO								
	safe_mode	7									
AA10	sys_nrespwron	0	I	Z	Z	0	vdds	Yes	NA	No	LVCMOS
Y10	sys_nreswarm	0	IOD	0	H	0	vdds	Yes	4	PU/ PD	LVCMOS
	gpio_30	4	IO								
	safe_mode	7									
AB12	sys_boot0	0	I	Z	Z	0	vdds	Yes	8	PU/ PD	LVCMOS
	dss_data18	3	IO								
	gpio_2	4	IO								
	safe_mode	7									
AC16	sys_boot1	0	I	Z	Z	0	vdds	Yes	8	PU/ PD	LVCMOS
	dss_data19	3	IO								
	gpio_3	4	IO								
	safe_mode	7									
AD17	sys_boot2	0	I	Z	Z	0	vdds	Yes	8	PU/ PD	LVCMOS
	gpio_4	4	IO								
	safe_mode	7									
AD18	sys_boot3	0	I	Z	Z	0	vdds	Yes	8	PU/ PD	LVCMOS
	dss_data20	3	O								
	gpio_5	4	IO								
	safe_mode	7									
AC17	sys_boot4	0	I	Z	Z	0	vdds	Yes	8	PU/ PD	LVCMOS
	mmc2_dir_dat2	1	O								
	dss_data21	3	O								
	gpio_6	4	IO								

Copyright © 2010–2011, Texas Instruments Incorporated

Table 2-3. Ball Characteristics (CUS Pkg.)[1] (continued)

BALL NUMBER [1]	PIN NAME [2]	MODE [3]	TYPE [4]	BALL RESET STATE [5]	BALL RESET REL. STATE [6]	RESET REL. MODE [7]	POWER [8]	HYS [9]	BUFFER STRENGTH (mA) [10]	PULLUP /DOWN TYPE [11]	IO CELL [12]
	safe_mode	7									
AB16	sys_boot5	0	I	Z	Z	0	vdds	Yes	8	PU/ PD	LVCMOS
	mmc2_dir_dat3	1	O								
	dss_data22	3	O								
	gpio_7	4	IO								
	safe_mode	7									
AA15	sys_boot6	0	I	Z	Z	0	vdds	Yes	8	PU/ PD	LVCMOS
	dss_data23	3	O								
	gpio_8	4	IO								
	safe_mode	7									
AD23	sys_off_ mode	0	O	0	L	7	vdds	Yes	4	PU/ PD	LVCMOS
	gpio_9	4	IO								
	safe_mode	7									
Y7	sys_clkout1	0	O	L	L	7[13]	vdds	Yes	4	PU/ PD	LVCMOS
	gpio_10	4	IO								
	safe_mode	7									
AA6	sys_clkout2	0	O	L	L	7	vdds	Yes	4	PU/ PD	LVCMOS
	gpio_186	4	IO								
	safe_mode	7									
AB7	jtag_ntrst	0	I	L	L	0	vdds	Yes	NA	PU/ PD	LVCMOS
AB6	jtag_tck	0	I	L	L	0	vdds	Yes	NA	PU/ PD	LVCMOS
AA7	jtag_rtck	0	O	L	0	0	vdds	NA	4	PU/ PD	LVCMOS
AA9	jtag_tms_tmsc	0	IO	H	H	0	vdds	Yes	4	PU/ PD	LVCMOS
AB10	jtag_tdi	0	I	H	H	0	vdds	Yes	NA	PU/ PD	LVCMOS
AB9	jtag_tdo	0	O	L	Z	0	vdds	NA	4	PU/ PD	LVCMOS
AC24	jtag_emu0	0	IO	H	H	0	vdds	Yes	4	PU/ PD	LVCMOS
	gpio_11	4	IO								
	safe_mode	7									
AD24	jtag_emu1	0	IO	H	H	0	vdds	Yes	4	PU/ PD	LVCMOS
	gpio_31	4	IO								
	safe_mode	7									
AC1	etk_clk	0	O	H	H	4	vdds	Yes	4	PU/ PD	LVCMOS
	mcbsp5_ clkx	1	IO								
	mmc3_clk	2	O								
	hsusb1_stp	3	O								
	gpio_12	4	IO								
	mm1_rxdp	5	IO								
	hw_dbg0	7	O								
AD3	etk_ctl	0	O	H	H	4	vdds	Yes	4	PU/ PD	LVCMOS
	mmc3_cmd	2	IO								
	hsusb1_clk	3	O								
	gpio_13	4	IO								
	hw_dbg1	7	O								
AD6	etk_d0	0	O	H	H	4	vdds	Yes	4	PU/ PD	LVCMOS
	mcspi3_ simo	1	IO								
	mmc3_dat4	2	IO								
	hsusb1_ data0	3	IO								
	gpio_14	4	IO								
	mm1_rxrcv	5	IO								
	hw_dbg2	7	O								
AC6	etk_d1	0	O	H	H	4	vdds	Yes	4	PU/ PD	LVCMOS
	mcspi3_ somi	1	IO								
	hsusb1_ data1	3	IO								
	gpio_15	4	IO								
	mm1_txse0	5	IO								

Copyright © 2010–2011, Texas Instruments Incorporated

Table 2-3. Ball Characteristics (CUS Pkg.)[1] (continued)

BALL NUMBER [1]	PIN NAME [2]	MODE [3]	TYPE [4]	BALL RESET STATE [5]	BALL RESET REL. STATE [6]	RESET REL. MODE [7]	POWER [8]	HYS [9]	BUFFER STRENGTH (mA) [10]	PULLUP /DOWN TYPE [11]	IO CELL [12]
	hw_dbg3	7	O								
AC7	etk_d2	0	O	H	H	4	vdds	Yes	4	PU/ PD	LVCMOS
	mcspi3_cs0	1	IO								
	hsusb1_ data2	3	IO								
	gpio_16	4	IO								
	mm1_txdat	5	IO								
	hw_dbg4	7	O								
AD8	etk_d3	0	O	H	H	4	vdds	Yes	4	PU/ PD	LVCMOS
	mcspi3_clk	1	IO								
	mmc3_dat3	2	IO								
	hsusb1_ data7	3	IO								
	gpio_17	4	IO								
	hw_dbg5	7	O								
AC5	etk_d4	0	O	L	L	4	vdds	Yes	4	PU/ PD	LVCMOS
	mcbsp5_dr	1	I								
	mmc3_dat0	2	IO								
	hsusb1_ data4	3	IO								
	gpio_18	4	IO								
	hw_dbg6	7	O								
AD2	etk_d5	0	O	L	L	4	vdds	Yes	4	PU/ PD	LVCMOS
	mcbsp5_fsx	1	IO								
	mmc3_dat1	2	IO								
	hsusb1_ data5	3	IO								
	gpio_19	4	IO								
	hw_dbg7	7	O								
AC8	etk_d6	0	O	L	L	4	vdds	Yes	4	PU/ PD	LVCMOS
	mcbsp5_dx	1	O								
	mmc3_dat2	2	IO								
	hsusb1_ data6	3	IO								
	gpio_20	4	IO								
	hw_dbg8	7	O								
AD9	etk_d7	0	O	L	L	4	vdds	Yes	4	PU/ PD	LVCMOS
	mcspi3_cs1	1	O								
	mmc3_dat7	2	IO								
	hsusb1_ data3	3	IO								
	gpio_21	4	IO								
	mm1_txen_n	5	IO								
	hw_dbg9	7	O								
AC4	etk_d8	0	O	L	L	4	vdds	Yes	4	PU/ PD	LVCMOS
	mmc3_dat6	2	IO								
	hsusb1_dir	3	I								
	gpio_22	4	IO								
	hw_dbg10	7	O								
AD5	etk_d9	0	O	L	L	4	vdds	Yes	4	PU/ PD	LVCMOS
	mmc3_dat5	2	IO								
	hsusb1_nxt	3	I								
	gpio_23	4	IO								
	mm1_rxdm	5	IO								
	hw_dbg11	7	O								
AC3	etk_d10	0	O	L	L	4	vdds	Yes	4	PU/ PD	LVCMOS
	uart1_rx	2	I								
	hsusb2_clk	3	O								
	gpio_24	4	IO								
	hw_dbg12	7	O								
AC9	etk_d11	0	O	L	L	4	vdds	Yes	4	PU/ PD	LVCMOS

Copyright © 2010–2011, Texas Instruments Incorporated

Table 2-3. Ball Characteristics (CUS Pkg.)[(1)] (continued)

BALL NUMBER [1]	PIN NAME [2]	MODE [3]	TYPE [4]	BALL RESET STATE [5]	BALL RESET REL. STATE [6]	RESET REL. MODE [7]	POWER [8]	HYS [9]	BUFFER STRENGTH (mA) [10]	PULLUP /DOWN TYPE [11]	IO CELL [12]
	hsusb2_stp	3	O								
	gpio_25	4	IO								
	mm2_rxdp	5	IO								
	hw_dbg13	7	O								
AC10	etk_d12	0	O	L	L	4	vdds	Yes	4	PU/ PD	LVCMOS
	hsusb2_dir	3	I								
	gpio_26	4	IO								
	hw_dbg14	7	O								
AD11	etk_d13	0	O	L	L	4	vdds	Yes	4	PU/ PD	LVCMOS
	hsusb2_nxt	3	I								
	gpio_27	4	IO								
	mm2_rxdm	5	IO								
	hw_dbg15	7	O								
AC11	etk_d14	0	O	L	L	4	vdds	Yes	4	PU/ PD	LVCMOS
	hsusb2_ data0	3	IO								
	gpio_28	4	IO								
	mm2_rxrcv	5	IO								
	hw_dbg16	7	O								
AD12	etk_d15	0	O	L	L	4	vdds	Yes	4	PU/ PD	LVCMOS
	hsusb2_ data1	3	IO								
	gpio_29	4	IO								
	mm2_txse0	5	IO								
	hw_dbg17	7	O								
E16, F15, F16, G15, G16, H15, J6, J7, J8, K6, K7, K8	vdds_mem	0	PWR	-	-	-	-	-	-	-	-
F12, F13, G12, G13, H12, H13, J17, J18, K17, K18, K19, L14, L15, M14, M15, R17, R18, R19, T17, T18, T19, T20	vdd_core	0	PWR	-	-	-	-	-	-	-	-
F10, G9, G10, H9, H10, J9, J10, L11, L12, M6, M7, M8, M12, N6, N7, N8, R6, R7, R8, T7, T8, U12, U13, V12, V13, W12, W13	vdd_mpu_iva	0	PWR	-	-	-	-	-	-	-	-
H8	vdds_x	0	PWR	-	-	-	-	-	-	-	-
M17, M18, M19, N17, N18, N19, U10, V9, V10, W9, W10, Y9	vdds	0	PWR	-	-	-	-	-	-	-	-
N24	vdds_mmc1	0	PWR	-	-	-	-	-	-	-	-
Y12	cap_vddu_ wkup_logic	0	PWR	-	-	-	-	-	-	-	-
U8	cap_vdd_sram_mpu_ iva	0	PWR	-	-	-	-	-	-	-	-
H17	cap_vdd_sram_core	0	PWR	-	-	-	-	-	-	-	-
G18	vdda_dplls_dll	0	PWR	-	-	-	-	-	-	-	-
U17	vdda_dpll_per	0	PWR	-	-	-	-	-	-	-	-
AA12	vdds_sram	0	PWR	-	-	-	-	-	-	-	-
AA13	vdda_wkup_bg_bb	0	PWR	-	-	-	-	-	-	-	-

Copyright © 2010–2011, Texas Instruments Incorporated

Table 2-3. Ball Characteristics (CUS Pkg.)[1] (continued)

BALL NUMBER [1]	PIN NAME [2]	MODE [3]	TYPE [4]	BALL RESET STATE [5]	BALL RESET REL. STATE [6]	RESET REL. MODE [7]	POWER [8]	HYS [9]	BUFFER STRENGTH (mA) [10]	PULLUP /DOWN TYPE [11]	IO CELL [12]
N21	cap_vdd_bb_mpu_iva	0	PWR	-	-	-	-	-	-	-	-
N20	cap_vddu_array	0	PWR	-	-	-	-	-	-	-	-
AB15	vssa_dac	0	GND	-	-	-	-	-	-	-	-
AB13	vdda_dac	0	PWR	-	-	-	-	-	-	-	-
H11, H14, H16, J11, J12, J13, J14, J15, J16, K10, K11, K14, K15, L8, L10, L13, L17, M9, M10, M11, M13, M16, N9, N10, N11, N12, N13, N14, N15, N16, P8, P10, P11, P12, P13, P14, P15, P17, R10, R11, R14, R15, T9, T10, T11, T12, T13, T14, T15, T16, U9, U11, U14, U15, U16, V15, V16	vss	0	GND	-	-	-	-	-	-	-	-
AD1, A1, A2, B1	No Connect[2]	-	-	-	-	-	-	-	-	-	-
W15	sys_xtalgnd	0	GND	-	-	-	-	-	-	-	-

(1) NA in this table stands for "Not Applicable".

(2) Pins labeled as "No connect" must be left unconnected. Any connections to these pins may result in unpredictable behavior.

(3) Depending on the sys_clkreq direction the corresponding reset released state value can be:

– Z if sys_clkreq is used as input
– 1 if sys_clkreq is used as output

For a full description of the sys_clkreq control, see Power, Reset, and Clock Management chapter of the *AM/DM37x Multimedia Device Technical Reference Manual* (literature number SPRUGN4).

(4) PU = [50 to 100 kΩ] per default or [10 to 50 kΩ] according to the selected mode. For a full description of the pull-up drive strength programming, see the PRG_SDMMC_PUSTRENGTH configuration register bit field in the System Control Module chapter of the *AM/DM37x Multimedia Device Technical Reference Manual* (literature number SPRUGN4). PD: 30 to 150 kΩ.

(5) The usage of this GPIO is strongly restricted. For more information, see the General-Purpose Interface chapter of the *AM/DM37x Multimedia Device Technical Reference Manual* (literature number SPRUGN4).

(6) The drive strength is fixed regardless of the load. The driver is designed to drive 75Ω for video applications.

(7) In buffer mode, the drive strength is fixed regardless of the load. The driver is designed to drive 75Ω for video applications. In bypass mode, the drive strength is 0.47 mA.

(8) The drive strength of these IOs is set according to the programmable load range: 2 pF to 4 pF per default or 4 pF to 12 pF. For a full description of the drive strength programming, see the System Control Module chapter of the *AM/DM37x Multimedia Device Technical Reference Manual* (literature number SPRUGN4).

(9) In the safe_mode_out1, the buffer is configured to drive 1.

(10) The pullup and pulldown can be either the standard LVCMOS 100-µA drive strength or the I2C pullup and pulldown described below: Nominal resistance = 1.66 kΩ in high-speed mode with a load range of 5 pF to 12 pF, 4.5 kΩ in standard / fast mode with a load range of 5 pF to 15 pF.

(11) The default buffer configuration is High-Speed I2C point-to-point mode using internal pullup. For a full description of the pull drive strength programming, see prg_i2c1_pullupresx, prg_i2c1_lb1lb0, and prg_sr_pullupresx, prg_sr_lb bits of the CONTROL_PROG_IO1, CONTROL_PROG_IO_WKUP1 control modules in the System Control Module / SCM Programming Model / Feature Settings section and the System Control Module chapter of the *AM/DM37x Multimedia Device Technical Reference Manual* (literature number SPRUGN4) to modify the IO settings if required by the targeted interface application.

(12) The default buffer configuration is standard LVCMOS mode (non-I2C). For a full description of the pull drive strength programming, see PADCONFS bits of CONTROL_PADCONF_X control modules (standard LVCMOS mode), or prg_i2c2_pullupresx, prg_i2c2_lb1lb0, and prg_i2c3_pullupresx, prg_i2c3_lb1lb0 bits of the CONTROL_PROG_IO2, CONTROL_PROG_IO3 control modules (I2C mode) in the System Control Module chapter of the *AM/DM37x Multimedia Device Technical Reference Manual* (literature number SPRUGN4) to modify the IO settings if required by the targeted interface application.

(13) Mux0 if sys_boot6 is pulled down (clock master).

Copyright © 2010–2011, Texas Instruments Incorporated

(14) If MMC1 functional signals are enabled, vdds_mmc1 for MMC1 must be supplied by a dedicated power source.
If MMC1 functional signals are disabled, other multiplexed CMOS signals of the interface can be enabled. The interface can be supplied by the same power source as vdds. The vdds power source supplies the vdds_mmc1 ball.
If neither MMC1 functional balls or CMOS signals are enabled, the interface balls are left unconnected with its associated power supply (vdda/vssa) grounded.
For the corresponding setting of the PBIASLITEPWRDNZ0 bit, see the System Control Module / SCM Programming Model / Extended-Drain I/Os and PBIAS Cells Programming Guide section of the *AM/DM37x Multimedia Device Technical Reference Manual* (literature number SPRUGN4).

2.4 Multiplexing Characteristics

Table 2-4 provides a description of the multiplexing on the CBP, CBC, and CUS packages, respectively.

Note: The following does not take into account subsystem pin multiplexing options. Subsystem pin multiplexing options are described in Section 2.5, *Signal Description.* For more information, see the System Control Module / System Control Module Functional Description / Pad Functional Multiplexing and Configuration section of the *AM/DM37x Multimedia Device Technical Reference Manual* (literature number SPRUGN4).

Table 2-4. Multiplexing Characteristics

CBP		CBC		CUS	MODE 0	MODE 1	MODE 2	MODE 3	MODE 4	MODE 5	MODE 6	MODE 7
Bottom	Top	Bottom	Top									
NA	J2	NA	D1	D7	sdrc_d0							
NA	J1	NA	G1	C5	sdrc_d1							
NA	G2	NA	G2	C6	sdrc_d2							
NA	G1	NA	E1	B5	sdrc_d3							
NA	F2	NA	D2	D9	sdrc_d4							
NA	F1	NA	E2	D10	sdrc_d5							
NA	D2	NA	B3	C7	sdrc_d6							
NA	D1	NA	B4	B7	sdrc_d7							
NA	B13	NA	A10	B11	sdrc_d8							
NA	A13	NA	B11	C12	sdrc_d9							
NA	B14	NA	A11	B12	sdrc_d10							
NA	A14	NA	B12	D13	sdrc_d11							
NA	B16	NA	A16	C13	sdrc_d12							
NA	A16	NA	A17	B14	sdrc_d13							
NA	B19	NA	B17	A14	sdrc_d14							
NA	A19	NA	B18	B15	sdrc_d15							
NA	B3	NA	B7	C9	sdrc_d16							
NA	A3	NA	A5	E12	sdrc_d17							
NA	B5	NA	B6	B8	sdrc_d18							
NA	A5	NA	A6	B9	sdrc_d19							
NA	B8	NA	A8	C10	sdrc_d20							
NA	A8	NA	B9	B10	sdrc_d21							
NA	B9	NA	A9	D12	sdrc_d22							
NA	A9	NA	B10	E13	sdrc_d23							
NA	B21	NA	C21	E15	sdrc_d24							
NA	A21	NA	D20	D15	sdrc_d25							
NA	D22	NA	B19	C15	sdrc_d26							
NA	D23	NA	C20	B16	sdrc_d27							
NA	E22	NA	D21	C16	sdrc_d28							
NA	E23	NA	E20	D16	sdrc_d29							
NA	G22	NA	E21	B17	sdrc_d30							
NA	G23	NA	G21	B18	sdrc_d31							
NA	AB21	NA	AA18	C18	sdrc_ba0							
NA	AC21	NA	V20	D18	sdrc_ba1							
NA	N22	NA	G20	A4	sdrc_a0							
NA	N23	NA	K20	B4	sdrc_a1							
NA	P22	NA	J20	D6	sdrc_a2							
NA	P23	NA	J21	B3	sdrc_a3							
NA	R22	NA	U21	B2	sdrc_a4							
NA	R23	NA	R20	C3	sdrc_a5							
NA	T22	NA	M21	E3	sdrc_a6							
NA	T23	NA	M20	F6	sdrc_a7							
NA	U22	NA	N20	E10	sdrc_a8							
NA	U23	NA	K21	E9	sdrc_a9							

Copyright © 2010–2011, Texas Instruments Incorporated

Table 2-4. Multiplexing Characteristics (continued)

CBP		CBC		CUS	MODE 0	MODE 1	MODE 2	MODE 3	MODE 4	MODE 5	MODE 6	MODE 7
Bottom	Top	Bottom	Top									
NA	V22	NA	Y16	E7	sdrc_a10							
NA	V23	NA	N21	G6	sdrc_a11							
NA	W22	NA	R21	G7	sdrc_a12							
NA	W23	NA	AA15	F7	sdrc_a13							
NA	Y22	NA	Y12	F9	sdrc_a14							
NA	M22	NA	T21	A19	sdrc_ncs0							
NA	M23	NA	T20	B19	sdrc_ncs1							
NA	A11	NA	A12	A10	sdrc_clk							
NA	B11	NA	B13	A11	sdrc_nclk							
NA	J22	NA	Y15	B20	sdrc_cke0							safe_mode_out1
NA	J23	NA	Y13	C20	sdrc_cke1							safe_mode_out1
NA	L23	NA	V21	D19	sdrc_nras							
NA	L22	NA	U20	C19	sdrc_ncas							
NA	K23	NA	Y18	A20	sdrc_nwe							
NA	C1	NA	H1	B6	sdrc_dm0							
NA	A17	NA	A14	B13	sdrc_dm1							
NA	A6	NA	A4	A7	sdrc_dm2							
NA	A20	NA	A18	A16	sdrc_dm3							
NA	C2	NA	C2	A5	sdrc_dqs0							
NA	B17	NA	B15	A13	sdrc_dqs1							
NA	B6	NA	B8	A8	sdrc_dqs2							
NA	B20	NA	A19	A17	sdrc_dqs3							
N4	AC15	J2	NA	K4	gpmc_a1				gpio_34			safe_mode
M4	AB15	H1	NA	K3	gpmc_a2				gpio_35			safe_mode
L4	AC16	H2	NA	K2	gpmc_a3				gpio_36			safe_mode
K4	AB16	G2	NA	J4	gpmc_a4				gpio_37			safe_mode
T3	AC17	F1	NA	J3	gpmc_a5				gpio_38			safe_mode
R3	AB17	F2	NA	J2	gpmc_a6				gpio_39			safe_mode
N3	AC18	E1	NA	J1	gpmc_a7				gpio_40			safe_mode
M3	AB18	E2	NA	H1	gpmc_a8				gpio_41			safe_mode
L3	AC19	D1	NA	H2	gpmc_a9	sys_ndmareq2			gpio_42			safe_mode
K3	AB19	D2	NA	G2	gpmc_a10	sys_ndmareq3			gpio_43			safe_mode
NA	AC20	A4	NA	NA	gpmc_a11							safe_mode
K1	M2	AA2	U2	L2	gpmc_d0							
L1	M1	AA1	U1	M1	gpmc_d1							
L2	N2	AC2	V2	M2	gpmc_d2							
P2	N1	AC1	V1	N2	gpmc_d3							
T1	R2	AE5	AA3	M3	gpmc_d4							
V1	R1	AD6	AA4	P1	gpmc_d5							
V2	T2	AD5	Y3	P2	gpmc_d6							
W2	T1	AC5	Y4	R1	gpmc_d7							
H2	AB3	V1	R1	R2	gpmc_d8				gpio_44			safe_mode
K2	AC3	Y1	T1	T2	gpmc_d9				gpio_45			safe_mode
P1	AB4	T1	N1	U1	gpmc_d10				gpio_46			safe_mode

Copyright © 2010–2011, Texas Instruments Incorporated

Table 2-4. Multiplexing Characteristics (continued)

CBP		CBC		CUS	MODE 0	MODE 1	MODE 2	MODE 3	MODE 4	MODE 5	MODE 6	MODE 7
Bottom	Top	Bottom	Top									
R1	AC4	U2	P2	R3	gpmc_d11				gpio_47			safe_mode
R2	AB6	U1	P1	T3	gpmc_d12				gpio_48			safe_mode
T2	AC6	P1	M1	U2	gpmc_d13				gpio_49			safe_mode
W1	AB7	L2	J2	V1	gpmc_d14				gpio_50			safe_mode
Y1	AC7	M2	K2	V2	gpmc_d15				gpio_51			safe_mode
G4	Y2	AD8	AA8	E2	gpmc_ncs0							
H3	Y1	AD1	W1	NA	gpmc_ncs1				gpio_52			safe_mode
V8	NA	A3	NA	NA	gpmc_ncs2				gpio_53			safe_mode
U8	NA	B6	NA	D2	gpmc_ncs3	sys_ndmareq0			gpio_54			safe_mode
T8	NA	B4	NA	F4	gpmc_ncs4	sys_ndmareq1	mcbsp4_clkx	gpt_9_pwm_evt	gpio_55			safe_mode
R8	NA	C4	NA	G5	gpmc_ncs5	sys_ndmareq2	mcbsp4_dr	gpt_10_pwm_evt	gpio_56			safe_mode
P8	NA	B5	NA	F3	gpmc_ncs6	sys_ndmareq3	mcbsp4_dx	gpt_11_pwm_evt	gpio_57			safe_mode
N8	NA	C5	NA	G4	gpmc_ncs7	gpmc_io_dir	mcbsp4_fsx	gpt_8_pwm_evt	gpio_58			safe_mode
T4	W2	N1	L1	W2	gpmc_clk				gpio_59			safe_mode
F3	W1	AD10	AA9	F1	gpmc_nadv_ale							
G2	V2	N2	L2	F2	gpmc_noe							
F4	V1	M1	K1	G3	gpmc_nwe							
G3	AC12	K2	NA	K5	gpmc_nbe0_cle				gpio_60			safe_mode
U3	NA	J1	NA	L1	gpmc_nbe1				gpio_61			safe_mode
H1	AB10	AC6	Y5	E1	gpmc_nwp				gpio_62			safe_mode
M8	AB12	AC11	Y10	C1	gpmc_wait0							
L8	AC10	AC8	Y8	NA	gpmc_wait1				gpio_63			safe_mode
K8	NA	B3	NA	NA	gpmc_wait2		uart4_tx		gpio_64			safe_mode
J8	NA	C6	NA	C2	gpmc_wait3	sys_ndmareq1	uart4_rx[3]		gpio_65			safe_mode
D28	NA	G25	NA	G22	dss_pclk				gpio_66	hw_dbg12		safe_mode
D26	NA	K24	NA	E22	dss_hsync				gpio_67	hw_dbg13		safe_mode
D27	NA	M25	NA	F22	dss_vsync				gpio_68			safe_mode
E27	NA	F26	NA	J21	dss_acbias				gpio_69			safe_mode
AG22	NA	AE21	NA	AC19	dss_data0		uart1_cts		gpio_70			safe_mode
AH22	NA	AE22	NA	AB19	dss_data1		uart1_rts		gpio_71			safe_mode
AG23	NA	AE23	NA	AD20	dss_data2				gpio_72			safe_mode
AH23	NA	AE24	NA	AC20	dss_data3				gpio_73			safe_mode
AG24	NA	AD23	NA	AD21	dss_data4		uart3_rx_irrx		gpio_74			safe_mode
AH24	NA	AD24	NA	AC21	dss_data5		uart3_tx_irtx		gpio_75			safe_mode
E26	NA	G26	NA	D24	dss_data6		uart1_tx		gpio_76	hw_dbg14		safe_mode

Copyright © 2010–2011, Texas Instruments Incorporated

Table 2-4. Multiplexing Characteristics (continued)

CBP		CBC		CUS	MODE 0	MODE 1	MODE 2	MODE 3	MODE 4	MODE 5	MODE 6	MODE 7
Bottom	Top	Bottom	Top									
F28	NA	H25	NA	E23	dss_data7		uart1_rx		gpio_77	hw_dbg15		safe_mode
F27	NA	H26	NA	E24	dss_data8		uart3_rx_irrx		gpio_78	hw_dbg16		safe_mode
G26	NA	J26	NA	F23	dss_data9		uart3_tx_irtx		gpio_79	hw_dbg17		safe_mode
AD28	NA	AC26	NA	AC22	dss_data10				gpio_80			safe_mode
AD27	NA	AD26	NA	AC23	dss_data11				gpio_81			safe_mode
AB28	NA	AA25	NA	AB22	dss_data12				gpio_82			safe_mode
AB27	NA	Y25	NA	Y22	dss_data13				gpio_83			safe_mode
AA28	NA	AA26	NA	W22	dss_data14				gpio_84			safe_mode
AA27	NA	AB26	NA	V22	dss_data15				gpio_85			safe_mode
G25	NA	L25	NA	J22	dss_data16				gpio_86			safe_mode
H27	NA	L26	NA	G23	dss_data17				gpio_87			safe_mode
H26	NA	M24	NA	G24	dss_data18		mcspi3_clk	dss_data0	gpio_88			safe_mode
H25	NA	M26	NA	H23	dss_data19		mcspi3_simo	dss_data1	gpio_89			safe_mode
E28	NA	F25	NA	D23	dss_data20		mcspi3_somi	dss_data2	gpio_90			safe_mode
J26	NA	N24	NA	K22	dss_data21		mcspi3_cs0	dss_data3	gpio_91			safe_mode
AC27	NA	AC25	NA	V21	dss_data22		mcspi3_cs1	dss_data4	gpio_92			safe_mode
AC28	NA	AB25	NA	W21	dss_data23			dss_data5	gpio_93			safe_mode
W28	NA	V26	NA	AA23	cvideo2_out							
Y28	NA	W26	NA	AB24	cvideo1_out							
Y27	NA	W25	NA	AB23	cvideo1_vfb							
W27	NA	U24	NA	Y23	cvideo2_vfb							
W26	NA	V23	NA	Y24	cvideo1_rset							
A24	NA	C23	NA	A22	cam_hs				gpio_94	hw_dbg0		safe_mode
A23	NA	D23	NA	E18	cam_vs				gpio_95	hw_dbg1		safe_mode
C25	NA	C25	NA	B22	cam_xclka				gpio_96			safe_mode
C27	NA	C26	NA	J19	cam_pclk				gpio_97	hw_dbg2		safe_mode
C23	NA	B23	NA	H24	cam_fld		cam_global_reset		gpio_98	hw_dbg3		safe_mode
AG17	NA	AE16	NA	AB18	cam_d0				gpio_99[(1)]			safe_mode
AH17	NA	AE15	NA	AC18	cam_d1				gpio_100[(1)]			safe_mode
B24	NA	A24	NA	G19	cam_d2				gpio_101	hw_dbg4		safe_mode
C24	NA	B24	NA	F19	cam_d3				gpio_102	hw_dbg5		safe_mode
D24	NA	D24	NA	G20	cam_d4				gpio_103	hw_dbg6		safe_mode
A25	NA	C24	NA	B21	cam_d5				gpio_104	hw_dbg7		safe_mode
K28	NA	P25	NA	L24	cam_d6				gpio_105[(1)]			safe_mode
L28	NA	P26	NA	K24	cam_d7				gpio_106[(1)]			safe_mode

Copyright © 2010–2011, Texas Instruments Incorporated

Table 2-4. Multiplexing Characteristics (continued)

CBP		CBC		CUS	MODE 0	MODE 1	MODE 2	MODE 3	MODE 4	MODE 5	MODE 6	MODE 7
Bottom	Top	Bottom	Top									
K27	NA	N25	NA	J23	cam_d8				gpio_107[1]			safe_mode
L27	NA	N26	NA	K23	cam_d9				gpio_108[1]			safe_mode
B25	NA	D25	NA	F21	cam_d10				gpio_109	hw_dbg8		safe_mode
C26	NA	E26	NA	G21	cam_d11				gpio_110	hw_dbg9		safe_mode
B26	NA	E25	NA	C22	cam_xclkb				gpio_111			safe_mode
B23	NA	A23	NA	F18	cam_wen		cam_shutter		gpio_167	hw_dbg10		safe_mode
D25	NA	D26	NA	J20	cam_strobe				gpio_126	hw_dbg11		safe_mode
AG19	NA	AD17	NA	NA					gpio_112[1]			safe_mode
AH19	NA	AD16	NA	NA					gpio_113[1]			safe_mode
AG18	NA	AE18	NA	NA					gpio_114[1]			safe_mode
AH18	NA	AE17	NA	NA					gpio_115[1]			safe_mode
P21	NA	U18	NA	V20	mcbsp2_fsx				gpio_116			safe_mode
N21	NA	R18	NA	T21	mcbsp2_clkx				gpio_117			safe_mode
R21	NA	T18	NA	V19	mcbsp2_dr				gpio_118			safe_mode
M21	NA	R19	NA	R20	mcbsp2_dx				gpio_119			safe_mode
N28	NA	N19	NA	M23	mmc1_clk				gpio_120[2]			safe_mode
M27	NA	L18	NA	L23	mmc1_cmd				gpio_121[2]			safe_mode
N27	NA	M19	NA	M22	mmc1_dat0				gpio_122[2]			safe_mode
N26	NA	M18	NA	M21	mmc1_dat1				gpio_123[2]			safe_mode
N25	NA	K18	NA	M20	mmc1_dat2				gpio_124[2]			safe_mode
P28	NA	N20	NA	N23	mmc1_dat3				gpio_125[2]			safe_mode
P27	NA	M20	NA	N22					gpio_126[2]			safe_mode
P26	NA	P17	NA	NA					gpio_127[2]			safe_mode
R27	NA	P18	NA	NA					gpio_128			safe_mode
R25	NA	P19	NA	P24					gpio_129[2]			safe_mode
AE2	NA	W10	NA	Y1	mmc2_clk	mcspi3_clk			gpio_130			safe_mode
AG5	NA	R10	NA	AB5	mmc2_cmd	mcspi3_simo			gpio_131			safe_mode
AH5	NA	T10	NA	AB3	mmc2_dat0	mcspi3_somi			gpio_132			safe_mode
AH4	NA	T9	NA	Y3	mmc2_dat1				gpio_133			safe_mode
AG4	NA	U10	NA	W3	mmc2_dat2	mcspi3_cs1			gpio_134			safe_mode
AF4	NA	U9	NA	V3	mmc2_dat3	mcspi3_cs0			gpio_135			safe_mode
AE4	NA	V10	NA	AB2	mmc2_dat4	mmc2_dir_dat0		mmc3_dat0	gpio_136			safe_mode
AH3	NA	M3	NA	AA2	mmc2_dat5	mmc2_dir_dat1	cam_global_reset	mmc3_dat1	gpio_137		mm3_rxdp	safe_mode

Copyright © 2010–2011, Texas Instruments Incorporated

Table 2-4. Multiplexing Characteristics (continued)

CBP		CBC		CUS	MODE 0	MODE 1	MODE 2	MODE 3	MODE 4	MODE 5	MODE 6	MODE 7
Bottom	Top	Bottom	Top									
AF3	NA	L3	NA	Y2	mmc2_dat6	mmc2_dir_cmd	cam_shutter	mmc3_dat2	gpio_138			safe_mode
AE3	NA	K3	NA	AA1	mmc2_dat7	mmc2_clkin		mmc3_dat3	gpio_139		mm3_rxdm	safe_mode
AF6	NA	P3	NA	V6	mcbsp3_dx	uart2_cts			gpio_140			safe_mode
AE6	NA	N3	NA	V5	mcbsp3_dr	uart2_rts			gpio_141			safe_mode
AF5	NA	U3	NA	W4	mcbsp3_clkx	uart2_tx			gpio_142			safe_mode
AE5	NA	W3	NA	V4	mcbsp3_fsx	uart2_rx			gpio_143			safe_mode
AB26	NA	Y24	NA	NA	uart2_cts	mcbsp3_dx	gpt_9_pwm_evt		gpio_144			safe_mode
AB25	NA	AA24	NA	NA	uart2_rts	mcbsp3_dr	gpt_10_pwm_evt		gpio_145			safe_mode
AA25	NA	AD22	NA	NA	uart2_tx	mcbsp3_clkx	gpt_11_pwm_evt		gpio_146			safe_mode
AD25	NA	AD21	NA	NA	uart2_rx	mcbsp3_fsx	gpt_8_pwm_evt		gpio_147			safe_mode
AA8	NA	L4	NA	W7	uart1_tx				gpio_148			safe_mode
AA9	NA	R2	NA	W6	uart1_rts				gpio_149			safe_mode
W8	NA	W2	NA	AC2	uart1_cts				gpio_150			safe_mode
Y8	NA	H3	NA	V7	uart1_rx		mcbsp1_clkr	mcspi4_clk	gpio_151			safe_mode
AE1	NA	V3	NA	NA	mcbsp4_clkx				gpio_152		mm3_txse0	safe_mode
AD1	NA	U4	NA	NA	mcbsp4_dr				gpio_153		mm3_rxrcv	safe_mode
AD2	NA	R3	NA	NA	mcbsp4_dx				gpio_154		mm3_txdat	safe_mode
AC1	NA	T3	NA	NA	mcbsp4_fsx				gpio_155		mm3_txen_n	safe_mode
Y21	NA	U19	NA	W19	mcbsp1_clkr	mcspi4_clk			gpio_156			safe_mode
AA21	NA	V17	NA	AB20	mcbsp1_fsr		cam_global_reset		gpio_157			safe_mode
V21	NA	U17	NA	W18	mcbsp1_dx	mcspi4_simo	mcbsp3_dx		gpio_158			safe_mode
U21	NA	T20	NA	Y18	mcbsp1_dr	mcspi4_somi	mcbsp3_dr		gpio_159			safe_mode
T21	NA	T19	NA	AA18	mcbsp_clks		cam_shutter		gpio_160	uart1_cts		safe_mode
K26	NA	P20	NA	AA19	mcbsp1_fsx	mcspi4_cs0	mcbsp3_fsx		gpio_161			safe_mode
W21	NA	T17	NA	V18	mcbsp1_clkx		mcbsp3_clkx		gpio_162			safe_mode
H18	NA	F23	NA	A23	uart3_cts_rctx				gpio_163			safe_mode
H19	NA	F24	NA	B23	uart3_rts_sd				gpio_164			safe_mode
H20	NA	H24	NA	B24	uart3_rx_irrx				gpio_165			safe_mode
H21	NA	G24	NA	C23	uart3_tx_irtx				gpio_166			safe_mode
T28	NA	W19	NA	R21	hsusb0_clk				gpio_120			safe_mode
T25	NA	U20	NA	R23	hsusb0_stp				gpio_121			safe_mode
R28	NA	V19	NA	P23	hsusb0_dir				gpio_122			safe_mode
T26	NA	W18	NA	R22	hsusb0_nxt				gpio_124			safe_mode

Copyright © 2010–2011, Texas Instruments Incorporated

Table 2-4. Multiplexing Characteristics (continued)

CBP		CBC		CUS	MODE 0	MODE 1	MODE 2	MODE 3	MODE 4	MODE 5	MODE 6	MODE 7
Bottom	Top	Bottom	Top									
T27	NA	V20	NA	T24	hsusb0_data0		uart3_tx_irtx		gpio_125	uart2_tx		safe_mode
U28	NA	Y20	NA	T23	hsusb0_data1		uart3_rx_irrx		gpio_130	uart2_rx		safe_mode
U27	NA	V18	NA	U24	hsusb0_data2		uart3_rts_sd		gpio_131	uart2_rts		safe_mode
U26	NA	W20	NA	U23	hsusb0_data3		uart3_cts_rctx		gpio_169	uart2_cts		safe_mode
U25	NA	W17	NA	W24	hsusb0_data4				gpio_188			safe_mode
V28	NA	Y18	NA	V23	hsusb0_data5				gpio_189			safe_mode
V27	NA	Y19	NA	W23	hsusb0_data6				gpio_190			safe_mode
V26	NA	Y17	NA	T22	hsusb0_data7				gpio_191			safe_mode
K21	NA	J25	NA	K20	i2c1_scl							
J21	NA	J24	NA	K21	i2c1_sda							
AF15	NA	C2	NA	AC15	i2c2_scl				gpio_168			safe_mode
AE15	NA	C1	NA	AC14	i2c2_sda				gpio_183			safe_mode
AF14	NA	AB4	NA	AC13	i2c3_scl				gpio_184			safe_mode
AG14	NA	AC4	NA	AC12	i2c3_sda				gpio_185			safe_mode
AD26	NA	AD15	NA	Y16	i2c4_scl	sys_nvmode1						safe_mode
AE26	NA	W16	NA	Y15	i2c4_sda	sys_nvmode2						safe_mode
J25	NA	J23	NA	A24	hdq_sio	sys_altclk	i2c2_sccbe	i2c3_sccbe	gpio_170			safe_mode
AB3	NA	P9	NA	T5	mcspi1_clk	mmc2_dat4			gpio_171			safe_mode
AB4	NA	P8	NA	R4	mcspi1_simo	mmc2_dat5			gpio_172			safe_mode
AA4	NA	P7	NA	T4	mcspi1_somi	mmc2_dat6			gpio_173			safe_mode
AC2	NA	R7	NA	T6	mcspi1_cs0	mmc2_dat7			gpio_174			safe_mode
AC3	NA	R8	NA	NA	mcspi1_cs1			mmc3_cmd	gpio_175			safe_mode
AB1	NA	R9	NA	NA	mcspi1_cs2			mmc3_clk	gpio_176			safe_mode
AB2	NA	T8	NA	R5	mcspi1_cs3			hsusb2_data2	gpio_177	mm2_txdat		safe_mode
AA3	NA	W7	NA	N5	mcspi2_clk			hsusb2_data7	gpio_178			safe_mode
Y2	NA	W8	NA	N4	mcspi2_simo	gpt_9_pwm_evt		hsusb2_data4	gpio_179			safe_mode
Y3	NA	U8	NA	N3	mcspi2_somi	gpt_10_pwm_evt		hsusb2_data5	gpio_180			safe_mode
Y4	NA	V8	NA	M5	mcspi2_cs0	gpt_11_pwm_evt		hsusb2_data6	gpio_181			safe_mode
V3	NA	V9	NA	M4	mcspi2_cs1	gpt_8_pwm_evt		hsusb2_data3	gpio_182	mm2_txen_n		safe_mode
AE25	NA	AE20	NA	AA16	sys_32k							
AE17	NA	AF19	NA	AD15	sys_xtalin							
AF17	NA	AF20	NA	AD14	sys_xtalout							
AF25	NA	W15	NA	Y13	sys_clkreq				gpio_1			safe_mode
AF26	NA	V16	NA	W16	sys_nirq				gpio_0			safe_mode
AH25	NA	V13	NA	AA10	sys_nrespwron							

Copyright © 2010–2011, Texas Instruments Incorporated

Table 2-4. Multiplexing Characteristics (continued)

CBP		CBC		CUS	MODE 0	MODE 1	MODE 2	MODE 3	MODE 4	MODE 5	MODE 6	MODE 7
Bottom	Top	Bottom	Top									
AF24	NA	AD7	AA5	Y10	sys_nreswarm				gpio_30			safe_mode
AH26	NA	F3	NA	AB12	sys_boot0			dss_data18	gpio_2			safe_mode
AG26	NA	D3	NA	AC16	sys_boot1			dss_data19	gpio_3			safe_mode
AE14	NA	C3	NA	AD17	sys_boot2				gpio_4			safe_mode
AF18	NA	E3	NA	AD18	sys_boot3			dss_data20	gpio_5			safe_mode
AF19	NA	E4	NA	AC17	sys_boot4	mmc2_dir_dat2		dss_data21	gpio_6			safe_mode
AE21	NA	G3	NA	AB16	sys_boot5	mmc2_dir_dat3		dss_data22	gpio_7			safe_mode
AF21	NA	D4	NA	AA15	sys_boot6			dss_data23	gpio_8			safe_mode
AF22	NA	V12	NA	AD23	sys_off_mode				gpio_9			safe_mode
AG25	NA	AE14	NA	Y7	sys_clkout1				gpio_10			safe_mode
AE22	NA	W11	NA	AA6	sys_clkout2				gpio_186			safe_mode
AA17	NA	U15	NA	AB7	jtag_ntrst							
AA13	NA	V14	NA	AB6	jtag_tck							
AA12	NA	W13	NA	AA7	jtag_rtck							
AA18	NA	V15	NA	AA9	jtag_tms_tmsc							
AA20	NA	U16	NA	AB10	jtag_tdi							
AA19	NA	Y13	NA	AB9	jtag_tdo							
AA11	NA	Y15	NA	AC24	jtag_emu0				gpio_11			safe_mode
AA10	NA	Y14	NA	AD24	jtag_emu1				gpio_31			safe_mode
AF10	NA	AB2	NA	AC1	etk_clk	mcbsp5_clkx	mmc3_clk	hsusb1_stp	gpio_12	mm1_rxdp		hw_dbg0
AE10	NA	AB3	NA	AD3	etk_ctl		mmc3_cmd	hsusb1_clk	gpio_13			hw_dbg1
AF11	NA	AC3	NA	AD6	etk_d0	mcspi3_simo	mmc3_dat4	hsusb1_data0	gpio_14	mm1_rxrcv		hw_dbg2
AG12	NA	AD4	NA	AC6	etk_d1	mcspi3_somi		hsusb1_data1	gpio_15	mm1_txse0		hw_dbg3
AH12	NA	AD3	NA	AC7	etk_d2	mcspi3_cs0		hsusb1_data2	gpio_16	mm1_txdat		hw_dbg4
AE13	NA	AA3	NA	AD8	etk_d3	mcspi3_clk	mmc3_dat3	hsusb1_data7	gpio_17			hw_dbg5
AE11	NA	Y3	NA	AC5	etk_d4	mcbsp5_dr	mmc3_dat0	hsusb1_data4	gpio_18			hw_dbg6
AH9	NA	AB1	NA	AD2	etk_d5	mcbsp5_fsx	mmc3_dat1	hsusb1_data5	gpio_19			hw_dbg7
AF13	NA	AE3	NA	AC8	etk_d6	mcbsp5_dx	mmc3_dat2	hsusb1_data6	gpio_20			hw_dbg8
AH14	NA	AD2	NA	AD9	etk_d7	mcspi3_cs1	mmc3_dat7	hsusb1_data3	gpio_21	mm1_txen_n		hw_dbg9
AF9	NA	AA4	NA	AC4	etk_d8		mmc3_dat6	hsusb1_dir	gpio_22			hw_dbg10
AG9	NA	V2	NA	AD5	etk_d9		mmc3_dat5	hsusb1_nxt	gpio_23	mm1_rxdm		hw_dbg11
AE7	NA	AE4	NA	AC3	etk_d10		uart1_rx	hsusb2_clk	gpio_24			hw_dbg12
AF7	NA	AF6	NA	AC9	etk_d11			hsusb2_stp	gpio_25	mm2_rxdp		hw_dbg13
AG7	NA	AE6	NA	AC10	etk_d12			hsusb2_dir	gpio_26			hw_dbg14
AH7	NA	AF7	NA	AD11	etk_d13			hsusb2_nxt	gpio_27	mm2_rxdm		hw_dbg15

Copyright © 2010–2011, Texas Instruments Incorporated

Table 2-4. Multiplexing Characteristics (continued)

CBP		CBC		CUS	MODE 0	MODE 1	MODE 2	MODE 3	MODE 4	MODE 5	MODE 6	MODE 7
Bottom	Top	Bottom	Top									
AG8	NA	AF9	NA	AC11	etk_d14			hsusb2_data0	gpio_28	mm2_rxrcv		hw_dbg16
AH8	NA	AE9	NA	AD12	etk_d15			hsusb2_data1	gpio_29	mm2_txse0		hw_dbg17
AC4, J4, H4, D8, AE9, D9, D15, Y16, AE18, Y18, W18, K18, J18, AE19, Y19, U19, T19, N19, M19, J19, Y20, W20, V20, U20, P20, N20, K20, J20, D22, D23, AE24, M25, L25, E25	NA	AC21, D15, G11, G18, H20, M7, M17, R20, T7, Y8, Y12	NA	F12, F13, G12, G13, H12, H13, J17, J18, K17, K18, K19, L14, L15, M14, M15, R17, R18, R19, T17, T18, T19, T20	vdd_core							
Y9, W9, T9, R9, M9, L9, J9, Y10, U10, T10, R10, N10, M10, L10, J10, Y11, W11, K11, J11, W12, K13, Y14, K14, J14, Y15, W15, J15	NA	D13, G9, G12, H7, K11, L9, M9, M10, N7, N8, P10, U7, U11, U13, V7, V11, W9, Y9, Y11	NA	F10, G9, G10, H9, H10, J9, J10, L11, L12, M6, M7, M8, M12, N6, N7, N8, R6, R7, R8, T7, T8, U12, U13, V12, V13, W12, W13	vdd_mpu_iva							
U4	NA	D6	NA	N21	cap_vdd_bb_mpu_iva							
AA15	NA	K14	NA	Y12	cap_vddu_wkup_logic							
K15	NA	K13	NA	G18	vdda_dplls_dll							
W16	NA	U12	NA	AA12	vdds_sram							
AD3, AD4, W4, AF8, AE8, AF16, AE16, AF23, AE23, F25, F26, AG27	NA	A18, AC7, AC15, AC18, AC24, AD20, AE10, C11, D9, E24, G4, J15, J18, L7, L24, M4, T4, T24, W24, Y4, AB24	A3,A15,B5,F2,F21,L20,W21	M17, M18, M19, N17, N18, N19, U10, V9, V10, W9, W10, Y9	vdds							
U1, J1, F1, J2, F2, R4, B5, A5, AH6, B8, A8, B12, A12, D16, C16, B18, A18, B22, A22, G28, C28	AC5, P1, H1, F23, E1, C23, A4, A7, A10, A15, A18	NA	NA	E16, F15, F16, G15, G16, H15, J6, J7, J8, K6, K7, K8	vdds_mem							
AA16	NA	U14	NA	U17	vdda_dpll_per							
AA14	NA	W14	NA	AA13	vdda_wkup_bg_bb							

Copyright © 2010–2011, Texas Instruments Incorporated

Table 2-4. Multiplexing Characteristics (continued)

CBP		CBC		CUS	MODE 0	MODE 1	MODE 2	MODE 3	MODE 4	MODE 5	MODE 6	MODE 7
Bottom	Top	Bottom	Top									
AG2, U2, B2, AG3, W3, P3, J3, E3, A3, P4, E4, AG6, D7, C7, V9, U9, P9, N9, K9, W10, V10, P10, K10, D10, C10, AF12, AE12, Y12, K12, J12, Y13, W13, J13, D13, C13, W14, K16, J16, W17, K17, J17, W19, V19, R19, P19, L19, K19, D19, C19, AF20, AE20, T20, AG15, AF2, AF27, B15, J27, M2, M26, N2, AA2, AG10, AC25, AC26, Y25, W25, M20, L20, L26, G27, D21, C22, B27, A26, R20, R26	B4, B7, B10, B15, B18, C22, E2, F22, H2, P2, AB5, AB14, AB20	A6, A8, A13, AB5, AB22, AC10, AD14, AD25, AE7, B2, B25, C12, D7, D10, D12, D14, D18, D20, E22, G1, G8, G10, G20, G23, H4, K1, K15, K25, L10, L17, L23, N4, N10, N17, R1, R4, R17, T23, U25, W1, W4, W23, Y7, Y10, Y16, Y26	A7, A13, B14, C1, F1, F20, H2, H20, L21, M2, P20, R2, W20 Y6, Y11, AA7, AA16	H11, H14, H16, J11, J12, J13, J14, J15, J16, K10, K11, K14, K15, L8, L10, L13, L17, M9, M10, M11, M13, M16, N9, N10, N11, N12, N13, N14, N15, N16, P8, P10, P11, P12, P13, P14, P15, P17, R10, R11, R14, R15, T9, T10, T11, T12, T13, T14, T15, T16, U9, U11, U14, U15, U16, V15, V16	vss							
V25	NA	V25	NA	AB13	vdda_dac							
Y26	NA	V24	NA	AB15	vssa_dac							
K25	NA	N23	NA	N24	vdds_mmc1							
P25	NA	P23	NA	H8	vdds_x							
AG21	NA	AD19	NA	NA	vdds							
AH20	NA	AE19	NA	N20	cap_vddu_array							
AH21	NA	AC19	NA	NA	vss							
AG16	NA	AC16	NA	NA	vss							
AG20	NA	AD18	NA	NA	vdds							
M28	NA	L19	NA	NA	vss							
H28	NA	L20	NA	NA	vdds							
V4	NA	N9	NA	U8	cap_vdd_sram_mpu_iva							
L21	NA	K20	NA	H17	cap_vdd_sram_core							
Y17	NA	AF23	NA	W15	sys_xtalgnd							

(1) This GPIO is only an input (and not an output).

(2) The usage of this GPIO is strongly restricted. For more information, see the General-Purpose Interface chapter of the *AM/DM37x Multimedia Device Technical Reference Manual* (literature number SPRUGN4).

(3) UART4 is only available on CBP and CBC packages.

2.5 Signal Description

Many signals are available on multiple pins according to the software configuration of the pin multiplexing options.

1. **SIGNAL NAME:** The signal name
2. **DESCRIPTION:** Description of the signal
3. **TYPE:** Type = Ball type for this specific function:
   - I = Input
   - O = Output
   - Z = High-impedance
   - D = Open Drain
   - DS = Differential
   - A = Analog
4. **BALL BOTTOM:** Associated ball(s) bottom
5. **BALL TOP:** Associated ball(s) top
6. **SUBSYSTEM PIN MULTIPLEXING:** Contains a list of the pin multiplexing options at the module/subsystem level. The pin function is selected at the module/system level.

   Note: The Subsystem Multiplexing Signals are not described in the following tables. For more information, see the System Control Module / System Control Module Functional Description / Pad Functional Multiplexing and Configuration section of the *AM/DM37x Multimedia Device Technical Reference Manual* (literature number SPRUGN4).

2.5.1 External Memory Interfaces

NOTE

For more information, see Memory Subsystem / General-Purpose Memory Controller / GPMC Environment section of the *AM/DM37x Multimedia Device Technical Reference Manual* (literature number SPRUGN4).

Table 2-5. External Memory Interfaces – GPMC Signals Description[(1)]

SIGNAL NAME [1]	DESCRIPTION [2]	TYPE [3]	BALL BOTTOM (CBP Pkg.) [4]	BALL TOP (CBP Pkg.) [5]	BALL BOTTOM (CBC Pkg.) [4]	BALL TOP (CBC Pkg.) [5]	BALL BOTTOM (CUS Pkg.) [4]	SUBSYSTEM PIN MULTIPLEXING [6]
gpmc_a1	GPMC output address bit 1 / extended multiplexed address gpmc_a17	O	N4 / K1	AC15 / M2	J2 / AA2	NA / U2	K4 / L2	- / gpmc_d0
gpmc_a2	GPMC output address bit 2 / extended multiplexed address gpmc_a18	O	M4 / L1	AB15 / M1	H1 / AA1	NA / U1	K3 / M1	- / gpmc_d1
gpmc_a3	GPMC output address bit 3 / extended multiplexed address gpmc_a19	O	L4 / L2	AC16 / N2	H2 / AC2	NA / V2	K2 / M2	- / gpmc_d2
gpmc_a4	GPMC output address bit 4 / extended multiplexed address gpmc_a20	O	K4 / P2	AB16 / N1	G2 / AC1	NA / V1	J4 / N2	- / gpmc_d3
gpmc_a5	GPMC output address bit 5 / extended multiplexed address gpmc_a21	O	T3 / T1	AC17 / R2	F1 / AE5	NA / AA3	J3 / M3	- / gpmc_d4
gpmc_a6	GPMC output address bit 6 / extended multiplexed address gpmc_a22	O	R3 / V1	AB17 / R1	F2 / AD6	NA / AA4	J2/ P1	- / gpmc_d5
gpmc_a7	GPMC output address bit 7 / extended multiplexed address gpmc_a23	O	N3 / V2	AC18 / T2	E1 / AD5	NA / Y3	J1/ P2	- / gpmc_d6
gpmc_a8	GPMC output address bit 8 / extended multiplexed address gpmc_a24	O	M3 / W2	AB18 / T1	E2 / AC5	NA / Y4	H1/ R1	- / gpmc_d7

Copyright © 2010–2011, Texas Instruments Incorporated

Table 2-5. External Memory Interfaces – GPMC Signals Description[1] (continued)

SIGNAL NAME [1]	DESCRIPTION [2]	TYPE [3]	BALL BOTTOM (CBP Pkg.) [4]	BALL TOP (CBP Pkg.) [5]	BALL BOTTOM (CBC Pkg.) [4]	BALL TOP (CBC Pkg.) [5]	BALL BOTTOM (CUS Pkg.) [4]	SUBSYSTEM PIN MULTIPLEXING [6]
gpmc_a9	GPMC output address bit 9 / extended multiplexed address gpmc_a25	O	L3 / H2	AC19 / AB3	D1 / V1	NA / R1	H2/ R2	- / gpmc_d8
gpmc_a10	GPMC output address bit 10 / extended multiplexed address gpmc_a26	O	K3 / K2	AB19 / AC3	D2 / Y1	T1	G2/ T2	- / gpmc_d9
gpmc_a11	GPMC output address bit 11 / extended multiplexed address gpmc_a27	O	NC / P1	AC20 / AB4	A4 / T1	- / N1	NA	- / gpmc_d10
gpmc_a12	General-purpose memory address bit 12	O	R1	AC4	U2	P2	R3	gpmc_d11
gpmc_a13	General-purpose memory address bit 13	O	R2	AB6	U1	P1	T3	gpmc_d12
gpmc_a14	General-purpose memory address bit 14	O	T2	AC6	P1	M1	U2	gpmc_d13
gpmc_a15	General-purpose memory address bit 15	O	W1	AB7	L2	J2	V1	gpmc_d14
gpmc_a16	General-purpose memory address bit 16	O	Y1	AC7	M2	K2	V2	gpmc_d15
gpmc_a17	General-purpose memory address bit 17	O	N4	AC15	J2	NA	K4	gpmc_a1
gpmc_a18	General-purpose memory address bit 18	O	M4	AB15	H1	NA	K3	gpmc_a2
gpmc_a19	General-purpose memory address bit 19	O	L4	AC16	H2	NA	K2	gpmc_a3
gpmc_a20	General-purpose memory address bit 20	O	K4	AB16	G2	NA	J4	gpmc_a4
gpmc_a21	General-purpose memory address bit 21	O	T3	AC17	F1	NA	J3	gpmc_a5
gpmc_a22	General-purpose memory address bit 22	O	R3	AB17	F2	NA	J2	gpmc_a6
gpmc_a23	General-purpose memory address bit 23	O	N3	AC18	E1	NA	J1	gpmc_a7
gpmc_a24	General-purpose memory address bit 24	O	M3	AB18	E2	NA	H1	gpmc_a8
gpmc_a25	General-purpose memory address bit 25	O	L3	AC19	D1	NA	H2	gpmc_a9
gpmc_a26	General-purpose memory address bit 26	O	K3	AB19	D2	NA	G2	gpmc_a10
gpmc_d0	GPMC data bit 0 / multiplexed address gpmc_a1	IO	K1	M2	AA2	U2	L2	gpmc_d0
gpmc_d1	GPMC data bit 1 / multiplexed address gpmc_a2	IO	L1	M1	AA1	U1	M1	gpmc_d1
gpmc_d2	GPMC data bit 2 / multiplexed address gpmc_a3	IO	L2	N2	AC2	V2	M2	gpmc_d2
gpmc_d3	GPMC data bit 3 / multiplexed address gpmc_a4	IO	P2	N1	AC1	V1	N2	gpmc_d3
gpmc_d4	GPMC data bit 4 / multiplexed address gpmc_a5	IO	T1	R2	AE5	AA3	M3	gpmc_d4
gpmc_d5	GPMC data bit 5 / multiplexed address gpmc_a6	IO	V1	R1	AD6	AA4	P1	gpmc_d5
gpmc_d6	GPMC data bit 6 / multiplexed address gpmc_a7	IO	V2	T2	AD5	Y3	P2	gpmc_d6
gpmc_d7	GPMC data bit 7 / multiplexed address gpmc_a8	IO	W2	T1	AC5	Y4	R1	gpmc_d7
gpmc_d8	GPMC data bit 8 / multiplexed address gpmc_a9	IO	H2	AB3	V1	R1	R2	gpmc_d8
gpmc_d9	GPMC data bit 9 / multiplexed address gpmc_a10	IO	K2	AC3	Y1	T1	T2	gpmc_d9

Copyright © 2010–2011, Texas Instruments Incorporated

Table 2-5. External Memory Interfaces – GPMC Signals Description[1] (continued)

SIGNAL NAME [1]	DESCRIPTION [2]	TYPE [3]	BALL BOTTOM (CBP Pkg.) [4]	BALL TOP (CBP Pkg.) [5]	BALL BOTTOM (CBC Pkg.) [4]	BALL TOP (CBC Pkg.) [5]	BALL BOTTOM (CUS Pkg.) [4]	SUBSYSTEM PIN MULTIPLEXING [6]
gpmc_d10	GPMC data bit 10 / multiplexed address gpmc_a11	IO	P1	AB4	T1	N1	U1	gpmc_d10
gpmc_d11	GPMC data bit 11 / multiplexed address gpmc_a12	IO	R1	AC4	U2	P2	R3	gpmc_d11
gpmc_d12	GPMC data bit 12 / multiplexed address gpmc_a13	IO	R2	AB6	U1	P1	T3	gpmc_d12
gpmc_d13	GPMC data bit 13 / multiplexed address gpmc_a14	IO	T2	AC6	P1	M1	U2	gpmc_d13
gpmc_d14	GPMC data bit 14 / multiplexed address gpmc_a15	IO	W1	AB7	L2	J2	V1	gpmc_d14
gpmc_d15	GPMC data bit 15 / multiplexed address gpmc_a16	IO	Y1	AC7	M2	K2	V2	gpmc_d15
gpmc_ncs0	GPMC Chip Select bit 0	O	G4	Y2	AD8	AA8	E2	NA
gpmc_ncs1	GPMC Chip Select bit 1	O	H3	Y1	AD1	W1	NA	NA
gpmc_ncs2	GPMC Chip Select bit 2	O	V8	NA	A3	NA	NA	NA
gpmc_ncs3	GPMC Chip Select bit 3	O	U8	NA	B6	NA	D2	NA
gpmc_ncs4	GPMC Chip Select bit 4	O	T8	NA	B4	NA	F4	NA
gpmc_ncs5	GPMC Chip Select bit 5	O	R8	NA	C4	NA	G5	NA
gpmc_ncs6	GPMC Chip Select bit 6	O	P8	NA	B5	NA	F3	NA
gpmc_ncs7	GPMC Chip Select bit 7	O	N8	NA	C5	NA	G4	NA
gpmc_io_dir	GPMC IO direction control for use with external transceivers	O	N8	NA	C5	NA	G4	NA
gpmc_clk	GPMC clock	O	T4	W2	N1	L1	W2	NA
gpmc_nadv_ale	Address Valid or Address Latch Enable	O	F3	W1	AD10	AA9	F1	NA
gpmc_noe	Output Enable	O	G2	V2	N2	L2	F2	NA
gpmc_nwe	Write Enable	O	F4	V1	M1	K1	G3	NA
gpmc_nbe0_cle	Lower Byte Enable. Also used for Command Latch Enable	O	G3	AC12	K2	NA	K5	NA
gpmc_nbe1	Upper Byte Enable	O	U3	NA	J1	NA	L1	NA
gpmc_nwp	Flash Write Protect	O	H1	AB10	AC6	Y5	E1	NA
gpmc_wait0	External indication of wait	I	M8	AB12	AC11	Y10	C1	NA
gpmc_wait1	External indication of wait	I	L8	AC10	AC8	Y8	NA	NA
gpmc_wait2	External indication of wait	I	K8	NA	B3	NA	NA	NA
gpmc_wait3	External indication of wait	I	J8	NA	C6	NA	C2	NA

(1) NA in table stands for "Not Applicable".

NOTE

For more information, see Memory Subsystem / SDRAM Controller (SDRC) Subsystem / SDRC Subsystem Environment section of the *AM/DM37x Multimedia Device Technical Reference Manual* (literature number SPRUGN4).

Copyright © 2010–2011, Texas Instruments Incorporated

Table 2-6. External Memory Interfaces – SDRC Signals Description[(1)]

SIGNAL NAME [1]	DESCRIPTION [2]	TYPE [3]	BALL BOTTOM (CBP Pkg.) [4][(2)]	BALL TOP (CBP Pkg.) [5]	BALL BOTTOM (CBC Pkg.) [4][(2)]	BALL TOP (CBC Pkg.) [5]	BALL BOTTOM (CUS Pkg.) [4]
sdrc_d0	SDRAM data bit 0	IO	NA	J2	NA	D1	D7
sdrc_d1	SDRAM data bit 1	IO	NA	J1	NA	G1	C5
sdrc_d2	SDRAM data bit 2	IO	NA	G2	NA	G2	C6
sdrc_d3	SDRAM data bit 3	IO	NA	G1	NA	E1	B5
sdrc_d4	SDRAM data bit 4	IO	NA	F2	NA	D2	D9
sdrc_d5	SDRAM data bit 5	IO	NA	F1	NA	E2	D10
sdrc_d6	SDRAM data bit 6	IO	NA	D2	NA	B3	C7
sdrc_d7	SDRAM data bit 7	IO	NA	D1	NA	B4	B7
sdrc_d8	SDRAM data bit 8	IO	NA	B13	NA	A10	B11
sdrc_d9	SDRAM data bit 9	IO	NA	A13	NA	B11	C12
sdrc_d10	SDRAM data bit 10	IO	NA	B14	NA	A11	B12
sdrc_d11	SDRAM data bit 11	IO	NA	A14	NA	B12	D13
sdrc_d12	SDRAM data bit 12	IO	NA	B16	NA	A16	C13
sdrc_d13	SDRAM data bit 13	IO	NA	A16	NA	A17	B14
sdrc_d14	SDRAM data bit 14	IO	NA	B19	NA	B17	A14
sdrc_d15	SDRAM data bit 15	IO	NA	A19	NA	B18	B15
sdrc_d16	SDRAM data bit 16	IO	NA	B3	NA	B7	C9
sdrc_d17	SDRAM data bit 17	IO	NA	A3	NA	A5	E12
sdrc_d18	SDRAM data bit 18	IO	NA	B5	NA	B6	B8
sdrc_d19	SDRAM data bit 19	IO	NA	A5	NA	A6	B9
sdrc_d20	SDRAM data bit 20	IO	NA	B8	NA	A8	C10
sdrc_d21	SDRAM data bit 21	IO	NA	A8	NA	B9	B10
sdrc_d22	SDRAM data bit 22	IO	NA	B9	NA	A9	D12
sdrc_d23	SDRAM data bit 23	IO	NA	A9	NA	B10	E13
sdrc_d24	SDRAM data bit 24	IO	NA	B21	NA	C21	E15
sdrc_d25	SDRAM data bit 25	IO	NA	A21	NA	D20	D15
sdrc_d26	SDRAM data bit 26	IO	NA	D22	NA	B19	C15
sdrc_d27	SDRAM data bit 27	IO	NA	D23	NA	C20	B16
sdrc_d28	SDRAM data bit 28	IO	NA	E22	NA	D21	C16
sdrc_d29	SDRAM data bit 29	IO	NA	E23	NA	E20	D16
sdrc_d30	SDRAM data bit 30	IO	NA	G22	NA	E21	B17
sdrc_d31	SDRAM data bit 31	IO	NA	G23	NA	G21	B18
sdrc_ba0	SDRAM bank select 0	O	NA	AB21	NA	AA18	C18
sdrc_ba1	SDRAM bank select 1	O	NA	AC21	NA	V20	D18
sdrc_a0	SDRAM address bit 0	O	NA	N22	NA	G20	A4
sdrc_a1	SDRAM address bit 1	O	NA	N23	NA	K20	B4
sdrc_a2	SDRAM address bit 2	O	NA	P22	NA	J20	D6
sdrc_a3	SDRAM address bit 3	O	NA	P23	NA	J21	B3
sdrc_a4	SDRAM address bit 4	O	NA	R22	NA	U21	B2
sdrc_a5	SDRAM address bit 5	O	NA	R23	NA	R20	C3
sdrc_a6	SDRAM address bit 6	O	NA	T22	NA	M21	E3
sdrc_a7	SDRAM address bit 7	O	NA	T23	NA	M20	F6
sdrc_a8	SDRAM address bit 8	O	NA	U22	NA	N20	E10
sdrc_a9	SDRAM address bit 9	O	NA	U23	NA	K21	E9
sdrc_a10	SDRAM address bit 10	O	NA	V22	NA	Y16	E7
sdrc_a11	SDRAM address bit 11	O	NA	V23	NA	N21	G6
sdrc_a12	SDRAM address bit 12	O	NA	W22	NA	R21	G7
sdrc_a13	SDRAM address bit 13	O	NA	W23	NA	AA15	F7
sdrc_a14	SDRAM address bit 14	O	NA	Y22	NA	Y12	F9

Copyright © 2010–2011, Texas Instruments Incorporated

Table 2-6. External Memory Interfaces – SDRC Signals Description[(1)] (continued)

SIGNAL NAME [1]	DESCRIPTION [2]	TYPE [3]	BALL BOTTOM (CBP Pkg.) [4][(2)]	BALL TOP (CBP Pkg.) [5]	BALL BOTTOM (CBC Pkg.) [4][(2)]	BALL TOP (CBC Pkg.) [5]	BALL BOTTOM (CUS Pkg.) [4]
sdrc_ncs0	Chip select 0	O	NA	M22	NA	T21	A19
sdrc_ncs1	Chip select 1	O	NA	M23	NA	T20	B19
sdrc_clk	Clock	IO	NA	A11	NA	A12	A10
sdrc_nclk	Clock Invert	O	NA	B11	NA	B13	A11
sdrc_cke0	Clock Enable 0	O	NA	J22	NA	Y15	B20
sdrc_cke1	Clock Enable 1	O	NA	J23	NA	Y13	C20
sdrc_nras	SDRAM Row Access	O	NA	L23	NA	V21	D19
sdrc_ncas	SDRAM column address strobe	O	NA	L22	NA	U20	C19
sdrc_nwe	SDRAM write enable	O	NA	K23	NA	Y18	A20
sdrc_dm 0	Data Mask 0	O	NA	C1	NA	H1	B6
sdrc_ dm1	Data Mask 1	O	NA	A17	NA	A14	B13
sdrc_ dm2	Data Mask 2	O	NA	A6	NA	A4	A7
sdrc_dm 3	Data Mask 3	O	NA	A20	NA	A18	A16
sdrc_dqs0	Data Strobe 0	IO	NA	B17	NA	C2	A5
sdrc_dqs1	Data Strobe 1	IO	NA	NA	NA	B15	A13
sdrc_dqs2	Data Strobe 2	IO	NA	NA	NA	B8	A8
sdrc_dqs3	Data Strobe 3	IO	NA	B20	NA	A19	A17

(1) NA in this table stands for "Not Applicable".

(2) For a list of pins not supported on a particular package, see Table 2-4.

Copyright © 2010–2011, Texas Instruments Incorporated

2.5.2 Video Interfaces

Table 2-7. Video Interfaces – CAM Signals Description

SIGNAL NAME [1]	DESCRIPTION [2]	TYPE [3]	BALL BOTTOM (CBP Pkg.) [4]	BALL BOTTOM (CBC Pkg.) [4]	BALL BOTTOM (CUS Pkg.) [4]
cam_hs	Camera Horizontal Synchronization	IO	A24	C23	A22
cam_vs	Camera Vertical Synchronization	IO	A23	D23	E18
cam_xclka	Camera Clock Output a	O	C25	C25	B22
cam_xclkb	Camera Clock Output b	O	B26	E25	C22
cam_d0	Camera digital image data bit 0	I	AG17	AE16	AB18
cam_d1	Camera digital image data bit 1	I	AH17	AE15	AC18
cam_d2	Camera digital image data bit 2	I	B24	A24	G19
cam_d3	Camera digital image data bit 3	I	C24	B24	F19
cam_d4	Camera digital image data bit 4	I	D24	D24	G20
cam_d5	Camera digital image data bit 5	I	A25	C24	B21
cam_d6	Camera digital image data bit 6	I	K28	P25	L24
cam_d7	Camera digital image data bit 7	I	L28	P26	K24
cam_d8	Camera digital image data bit 8	I	K27	N25	J23
cam_d9	Camera digital image data bit 9	I	L27	N26	K23
cam_d10	Camera digital image data bit 10	I	B25	D25	F21
cam_d11	Camera digital image data bit 11	I	C26	E26	G21
cam_fld	Camera field identification	IO	C23	B23	H24
cam_pclk	Camera pixel clock	I	C27	C26	J19
cam_wen	Camera Write Enable	I	B23	A23	F18
cam_strobe	Flash strobe control signal	O	D25	D26	J20
cam_global_reset	Global reset is used strobe synchronization	IO	C23 / AH3 / AA21	B23/M3/V17	H24/ AA2/ AB20
cam_shutter	Mechanical shutter control signal	O	B23 / AF3 / T21	A23 / T19/ L3	F18/ Y2/ AA18

NOTE

For more information, see Display Subsystem / Display Subsystem Environment section of the *AM/DM37x Multimedia Device Technical Reference Manual* (literature number SPRUGN4).

Table 2-8. Video Interfaces – DSS Signals Description

SIGNAL NAME [1]	DESCRIPTION [2]	TYPE [3]	BALL BOTTOM (CBP Pkg.) [4]	BALL BOTTOM (CBC Pkg.) [4]	BALL BOTTOM (CUS Pkg.) [4]
dss_pclk	LCD Pixel Clock	O	D28	G25	G22
dss_hsync	LCD Horizontal Synchronization	O	D26	K24	E22
dss_vsync	LCD Vertical Synchronization	O	D27	M25	F22
dss_acbias	AC bias control (STN) or pixel data enable (TFT) output	O	E27	F26	J21
dss_data0	LCD Pixel Data bit 0	O	AG22 / H26	AE21 / M24	AC19 / G24
dss_data1	LCD Pixel Data bit 1	O	AH22 / H25	AE22 / M26	AB19 / H23
dss_data2	LCD Pixel Data bit 2	O	AG23 / E28	AE23 / F25	AD20 / D23
dss_data3	LCD Pixel Data bit 3	O	AH23 / J26	AE24 / N24	AC20 / K22
dss_data4	LCD Pixel Data bit 4	O	AG24 / AC27	AD23 / AC25	AD21 / V21
dss_data5	LCD Pixel Data bit 5	O	AH24 / AC28	AD24 / AB25	AC21 / W21
dss_data6	LCD Pixel Data bit 6	O	E26	G26	D24
dss_data7	LCD Pixel Data bit 7	O	F28	H25	E23
dss_data8	LCD Pixel Data bit 8	O	F27	H26	E24
dss_data9	LCD Pixel Data bit 9	O	G26	J26	F23
dss_data10	LCD Pixel Data bit 10	O	AD28	AC26	AC22

Copyright © 2010–2011, Texas Instruments Incorporated

Table 2-8. Video Interfaces – DSS Signals Description (continued)

SIGNAL NAME [1]	DESCRIPTION [2]	TYPE [3]	BALL BOTTOM (CBP Pkg.) [4]	BALL BOTTOM (CBC Pkg.) [4]	BALL BOTTOM (CUS Pkg.) [4]
dss_data11	LCD Pixel Data bit 11	O	AD27	AD26	AC23
dss_data12	LCD Pixel Data bit 12	O	AB28	AA25	AB22
dss_data13	LCD Pixel Data bit 13	O	AB27	Y25	Y22
dss_data14	LCD Pixel Data bit 14	O	AA28	AA26	W22
dss_data15	LCD Pixel Data bit 15	O	AA27	AB26	V22
dss_data16	LCD Pixel Data bit 16	O	G25	L25	J22
dss_data17	LCD Pixel Data bit 17	O	H27	L26	G23
dss_data18	LCD Pixel Data bit 18	O	H26 / AH26	M24 / F3	G24 / AB12
dss_data19	LCD Pixel Data bit 19	O	H25 / AG26	M26 / D3	H23 / AC16
dss_data20	LCD Pixel Data bit 20	O	E28 / AF18	F25 / E3	D23 / AD18
dss_data21	LCD Pixel Data bit 21	O	J26 / AF19	N24 / E4	K22 / AC17
dss_data22	LCD Pixel Data bit 22	O	AC27 / AE21	AC25 / G23	V21 / AB16
dss_data23	LCD Pixel Data bit 23	O	AC28 / AF21	AB25 / D4	W21 / AA15

Table 2-9. Video Interfaces – RFBI Signals Description

SIGNAL NAME [1]	DESCRIPTION [2]	TYPE [3]	BALL BOTTOM (CBP Pkg.) [4]	BALL BOTTOM (CBC Pkg.) [4]	BALL BOTTOM (CUS Pkg.) [4]	SUBSYSTEM PIN MULTIPLEXING [6]
rfbi_a0	RFBI command/data control	O	E27	F26	J21	dss_acbias
rfbi_cs0	1st LCD chip select	O	D26	K24	E22	dss_hsync
rfbi_da0	RFBI data bus 0	IO	AG22 / H26	AE21 / M24	AC19 / G24	dss_data0
rfbi_da1	RFBI data bus 1	IO	AH22 / H25	AE22 / M26	AB19 / H23	dss_data1
rfbi_da2	RFBI data bus 2	IO	AG23 / E28	AE23 / F25	AD20 / D23	dss_data2
rfbi_da3	RFBI data bus 3	IO	AH23 / J26	AE24 / N24	AC20 / K22	dss_data3
rfbi_da4	RFBI data bus 4	IO	AG24 / AC27	AD23 / AC25	AD21 / V21	dss_data4
rfbi_da5	RFBI data bus 5	IO	AH24 / AC28	AD24 / AB25	AC21 / W21	dss_data5
rfbi_da6	RFBI data bus 6	IO	E26	G26	D24	dss_data6
rfbi_da7	RFBI data bus 7	IO	F28	H25	E23	dss_data7
rfbi_da8	RFBI data bus 8	IO	F27	H26	E24	dss_data8
rfbi_da9	RFBI data bus 9	IO	G26	J26	F23	dss_data9
rfbi_da10	RFBI data bus 10	IO	AD28	AC26	AC22	dss_data10
rfbi_da11	RFBI data bus 11	IO	AD27	AD26	AC23	dss_data11
rfbi_da12	RFBI data bus 12	IO	AB28	AA25	AB22	dss_data12
rfbi_da13	RFBI data bus 13	IO	AB27	Y25	Y22	dss_data13
rfbi_da14	RFBI data bus 14	IO	AA28	AA26	W22	dss_data14
rfbi_da15	RFBI data bus 15	IO	AA27	AB26	V22	dss_data15
rfbi_rd	Read enable for RFBI	O	D28	G25	G22	dss_pclk
rfbi_wr	Write Enable for RFBI	O	D27	M25	F22	dss_vsync
rfbi_te_vsync 0	tearing effect removal and Vsync input from 1st LCD	I	G25	L25	J22	dss_data16
rfbi_hsync0	Hsync for 1st LCD	I	H27	L26	G23	dss_data17
rfbi_te_vsync 1	tearing effect removal and Vsync input from 2nd LCD	I	H26 / AH26	M24 / F3	G24 / AB12	dss_data18
rfbi_hsync1	Hsync for 2nd LCD	I	H25 / AG26	M26 / D3	H23 / AC16	dss_data19
rfbi_cs1	2nd LCD chip select	O	E28 / AF18	F25 / E3	D23 / AD18	dss_data20

Copyright © 2010–2011, Texas Instruments Incorporated

Table 2-10. Video Interfaces – TV Signals Description

SIGNAL NAME [1]	DESCRIPTION [2]	TYPE [3]	BALL BOTTOM (CBP Pkg.) [4]	BALL BOTTOM (CBC Pkg.) [4]	BALL BOTTOM (CUS Pkg.) [4]
cvideo1_out	TV analog output Composite: cvideo1_out	AO	Y28	W26	AB24
cvideo2_out	TV analog output S-VIDEO: cvideo2_out	AO	W28	V26	AA23
cvideo1_vfb	cvideo1_vfb: Feedback through external resistor to composite	AO	Y27	W25	AB23
cvideo2_vfb	cvideo2_vfb: Feedback through external resistor to S-VIDEO	AO	W27	U24	Y23
cvideo1_rset	cvideo1 input reference current resistor setting	AIO	W26	V23	Y24

Copyright © 2010–2011, Texas Instruments Incorporated

2.5.3 Serial Communication Interfaces

For more information, see HDQ/1-Wire / HDQ/1-Wire Environment section of the *AM/DM37x Multimedia Device Technical Reference Manual* (literature number SPRUGN4).

Table 2-11. Serial Communication Interfaces – HDQ/1-Wire Signals Description

SIGNAL NAME [1]	DESCRIPTION [2]	TYPE [3]	BALL BOTTOM (CBP Pkg.) [4]	BALL BOTTOM (CBC Pkg.) [4]	BALL BOTTOM (CUS Pkg.) [4]
hdq_sio	Bidirectional HDQ 1-Wire control and data Interface. Output is open drain.	IOD	J25	J23	A24

For more information, see Multimaster High-Speed I2C Controller / HS I2C Environment section of the *AM/DM37x Multimedia Device Technical Reference Manual* (literature number SPRUGN4).

Table 2-12. Serial Communication Interfaces – I^2C Signals Description

SIGNAL NAME [1]	DESCRIPTION [2]	TYPE [3]	BALL BOTTOM (CBP Pkg.) [4]	BALL BOTTOM (CBC Pkg.) [4]	BALL BOTTOM (CUS Pkg.) [4]
INTER-INTEGRATED CIRCUIT INTERFACE (I2C1)					
i2c1_scl	I^2C Master Serial clock. Output is open drain.	OD	K21	J25	K20
i2c1_sda	I^2C Serial Bidirectional Data. Output is open drain.	IOD	J21	J24	K21
INTER-INTEGRATED CIRCUIT INTERFACE (I2C3)					
i2c3_scl	I^2C Master Serial clock. Output is open drain.	OD	AF14	AB4	AC13
i2c3_sda	I^2C Serial Bidirectional Data. Output is open drain.	IOD	AG14	AC4	AC12
i2c3_sccbe	Serial Camera Control Bus Enable	OD	J25	J23	A24
INTER-INTEGRATED CIRCUIT INTERFACE (I2C2)					
i2c2_scl	I^2C Master Serial clock. Output is open drain.	OD	AF15	C2	AC15
i2c2_sda	I^2C Serial Bidirectional Data. Output is open drain.	IOD	AE15	C1	AC14
i2c2_sccbe	Serial Camera Control Bus Enable	OD	J25	J23	A24

For more information, see Power Reset and Clock Management / PRCM Introduction to Power Management / SmartReflex Voltage-Control Overview section of the *AM/DM37x Multimedia Device Technical Reference Manual* (literature number SPRUGN4).

Table 2-13. Serial Communication Interfaces – SmartReflex Signals Description(1)

SIGNAL NAME [1]	DESCRIPTION [2]	TYPE [3]	BALL BOTTOM (CBP Pkg.) [4]	BALL BOTTOM (CBC Pkg.) [4]	BALL BOTTOM (CUS Pkg.) [4]
INTER-INTEGRATED CIRCUIT INTERFACE (I2C4)					
i2c4_scl	I^2C Master Serial clock. Output is open drain.	OD	AD26	AD15	Y16
i2c4_sda	I^2C Serial Bidirectional Data. Output is open drain.	IOD	AE26	W16	Y15

(1) For more information on SmartReflex voltage control, see the PRCM chapter of the *AM/DM37x Multimedia Device Technical Reference Manual* (literature number SPRUGN4).

For more information, see Multi-Channel Buffered Serial Port / McBSP Environment section of the *AM/DM37x Multimedia Device Technical Reference Manual* (literature number SPRUGN4).

Table 2-14. Serial Communication Interfaces – McBSP LP Signals Description

SIGNAL NAME [1]	DESCRIPTION [2]	TYPE [3]	BALL BOTTOM (CBP Pkg.) [4]	BALL BOTTOM (CBC Pkg.) [4]	BALL BOTTOM (CUS Pkg.) [4]
MULTICHANNEL SERIAL (McBSP LP 1)					

Copyright © 2010–2011, Texas Instruments Incorporated

Table 2-14. Serial Communication Interfaces – McBSP LP Signals Description (continued)

SIGNAL NAME [1]	DESCRIPTION [2]	TYPE [3]	BALL BOTTOM (CBP Pkg.) [4]	BALL BOTTOM (CBC Pkg.) [4]	BALL BOTTOM (CUS Pkg.) [4]
mcbsp1_dr	Received serial data	I	U21	T20	Y18
mcbsp1_clkr	Receive Clock	IO	Y8 / Y21	U19 / H3	V7 / W19
mcbsp1_fsr	Receive frame synchronization	IO	AA21	V17	AB20
mcbsp1_dx	Transmitted serial data	O	V21	U17	W18
mcbsp1_clkx	Transmit clock	IO	W21	T17	V18
mcbsp1_fsx	Transmit frame synchronization	IO	K26	P20	AA19
mcbsp_clks	External clock input (shared by McBSP1, 2, 3, 4, and 5)	I	T21	T19	AA18
MULTICHANNEL SERIAL (McBSP LP 2)					
mcbsp2_dr	Received serial data	I	R21	T18	V19
mcbsp2_dx	Transmitted serial data	O	M21	R19	R20
mcbsp2_clkx	Combined serial clock	IO	N21	R18	T21
mcbsp2_fsx	Combined frame synchronization	IO	P21	U18	V20
MULTICHANNEL SERIAL (McBSP LP 3)					
mcbsp3_dr	Received serial data	I	AE6 / AB25 / U21	T20 / AA24 / N3	V5 / Y18
mcbsp3_dx	Transmitted serial data	O	AF6 / AB26 / V21	U17 / Y24 / P3	V6 / W18
mcbsp3_clkx	Combined serial clock	IO	AF5 / AA25 / W21	T17 / AD22 / U3	W4 / V18
mcbsp3_fsx	Combined frame synchronization	IO	AE5 / AD25 / K26	P20 / AD21 / W3	V4 / AA19
MULTICHANNEL SERIAL (McBSP LP 4)					
mcbsp4_dr	Received serial data	I	R8 / AD1	C4 / U4	G5
mcbsp4_dx	Transmitted serial data	O	P8 / AD2	B5 / R3	F3
mcbsp4_clkx	Combined serial clock	IO	T8 / AE1	B4 / V3	F4
mcbsp4_fsx	Combined frame synchronization	IO	N8 / AC1	C5 / T3	G4
MULTICHANNEL SERIAL (McBSP LP 5)					
mcbsp5_dr	Received serial data	I	AE11	Y3	AC5
mcbsp5_dx	Transmitted serial data	O	AF13	AE3	AC8
mcbsp5_clkx	Combined serial clock	IO	AF10	AB2	AC1
mcbsp5_fsx	Combined frame synchronization	IO	AH9	AB1	AD2

For more information, see Multichannel SPI / McSPI Environment section of the *AM/DM37x Multimedia Device Technical Reference Manual* (literature number SPRUGN4).

Table 2-15. Serial Communication Interfaces – McSPI Signals Description[(1)]

SIGNAL NAME [1]	DESCRIPTION [2]	TYPE [3]	BALL BOTTOM (CBP Pkg.) [4]	BALL BOTTOM (CBC Pkg.) [4]	BALL BOTTOM (CUS Pkg.) [4]
MULTICHANNEL SERIAL PORT INTERFACE (McSPI1)					
mcspi1_clk	SPI Clock	IO	AB3	P9	T5
mcspi1_simo	Slave data in, master data out	IO	AB4	P8	R4
mcspi1_somi	Slave data out, master data in	IO	AA4	P7	T4
mcspi1_cs0	SPI Enable 0, polarity configured by software	IO	AC2	R7	T6
mcspi1_cs1	SPI Enable 1, polarity configured by software	O	AC3	R8	NA
mcspi1_cs2	SPI Enable 2, polarity configured by software	O	AB1	R9	NA
mcspi1_cs3	SPI Enable 3, polarity configured by software	O	AB2	T8	R5
MULTICHANNEL SERIAL PORT INTERFACE (McSPI2)					
mcspi2_clk	SPI Clock	IO	AA3	W7	N5
mcspi2_simo	Slave data in, master data out	IO	Y2	W8	N4
mcspi2_somi	Slave data out, master data in	IO	Y3	U8	N3
mcspi2_cs0	SPI Enable 0, polarity configured by software	IO	Y4	V8	M5

Copyright © 2010–2011, Texas Instruments Incorporated

Table 2-15. Serial Communication Interfaces – McSPI Signals Description[(1)] (continued)

SIGNAL NAME [1]	DESCRIPTION [2]	TYPE [3]	BALL BOTTOM (CBP Pkg.) [4]	BALL BOTTOM (CBC Pkg.) [4]	BALL BOTTOM (CUS Pkg.) [4]
mcspi2_cs1	SPI Enable 1, polarity configured by software	O	V3	V9	M4
MULTICHANNEL SERIAL PORT INTERFACE (McSPI3)					
mcspi3_clk	SPI Clock	IO	H26 / AE2 / AE13	W10 / M24 / AA3	G24 / Y1 / AD8
mcspi3_simo	Slave data in, master data out	IO	H25 / AG5 / AF11	R10 / M26 / AC3	H23 / AB5 / AD6
mcspi3_somi	Slave data out, master data in	IO	E28 / AH5 / AG12	F25 / T10 / AD4	D23 / AB3 / AC6
mcspi3_cs0	SPI Enable 0, polarity configured by software	IO	J26 / AF4 / AH12	U9 / N24 / AD3	K22 / V3 / AC7
mcspi3_cs1	SPI Enable 1, polarity configured by software	O	AC27 / AG4 / AH14	AC25 / U10 / AD2	V21 / W3 / AD9
MULTICHANNEL SERIAL PORT INTERFACE (McSPI4)					
mcspi4_clk	SPI Clock	IO	Y8 / Y21	U19 / H3	V7 / W19
mcspi4_simo	Slave data in, master data out	IO	V21	U17	W18
mcspi4_somi	Slave data out, master data in	IO	U21	T20	Y18
mcspi4_cs0	SPI Enable 0, polarity configured by software	IO	K26	P20	AA19

(1) NA in this table stands for "Not applicable".

For more information, see UART/IrDA/CIR / UART/IrDA/CIR Environment section of the *AM/DM37x Multimedia Device Technical Reference Manual* (literature number SPRUGN4).

Table 2-16. Serial Communication Interfaces – UARTs Signals Description

SIGNAL NAME [1]	DESCRIPTION [2]	TYPE [3]	BALL BOTTOM (CBP Pkg.) [4]	BALL BOTTOM (CBC Pkg.) [4]	BALL BOTTOM (CUS Pkg.) [4]
UNIVERSAL ASYNCHRONOUS RECEIVER/TRANSMITTER (UART1)					
uart1_cts	UART1 Clear To Send	I	AG22 / W8 / T21	AE21 / T19 / W2	AC19 / AC2 / AA18
uart1_rts	UART1 Request To Send	O	AH22 / AA9	AE22 / R2	W6 / AB19
uart1_rx	UART1 Receive data	I	F28 / Y8 / AE7	H3 / H25 / AE4	E23 / V7 / AC3
uart1_tx	UART1 Transmit data	O	E26 / AA8	L4 / G26	D24 / W7
UNIVERSAL ASYNCHRONOUS RECEIVER/TRANSMITTER (UART2)					
uart2_cts	UART2 Clear To Send	I	AF6 / AB26 / U26	Y24/ P3/ W20	V6/ U23
uart2_rts	UART2 Request To Send	O	AE6 / AB25 / U27	AA24/ N3/ V18	V5/ U24
uart2_rx	UART2 Receive data	I	AE5 / AD25/ U28	W3/ AD21/ Y20	T23/ V4
uart2_tx	UART2 Transmit data	O	AF5 / AA25/ T27	U3/AD22/V20	T24/ W4
UNIVERSAL ASYNCHRONOUS RECEIVER/TRANSMITTER (UART3) / IrDA					
uart3_cts_rctx	UART3 Clear To Send (input), Remote TX (output)	IO	H18 / U26	W20 / F23	A23 / U23
uart3_rts_sd	UART3 Request To Send, IR enable	O	H19 / U27	V18 / F24	B23 / U24
uart3_rx_irrx	UART3 Receive data, IR and Remote RX	I	AG24 / H20 / U28 / F27	AD23 / Y20 / H24/ H26	AD21 / B24 / T23 / E24
uart3_tx_irtx	UART3 Transmit data, IR TX	O	AH24 / H21 / T27/ G26	AD24 / V20 / J29 / G24	AC21 / C23 / T24/ F23
UNIVERSAL ASYNCHRONOUS RECEIVER/TRANSMITTER (UART4) / IrDA					
uart4_rx	UART4 Receive data	I	J8	C6	NA
uart4_tx	UART4 Transmit data	O	K8	B3	NA

For more information, see High-Speed USB Host Subsystem and High-Speed USB OTG Controller / High-Speed USB Host Subsystem / High-Speed USB Host Subsystem Environment section of the *AM/DM37x Multimedia Device Technical Reference Manual* (literature number SPRUGN4).

Table 2-17. Serial Communication Interfaces – USB Signals Description[Section 4.3.6]

SIGNAL NAME [1]	DESCRIPTION [2]	TYPE [3]	BALL BOTTOM (CBP Pkg.) [4]	BALL BOTTOM (CBC Pkg.) [4]	BALL BOTTOM (CUS Pkg.) [4]
HIGH-SPEED UNIVERSAL SERIAL BUS INTERFACE (HSUSB0)					

Copyright © 2010–2011, Texas Instruments Incorporated

Table 2-17. Serial Communication Interfaces – USB Signals Description[Section 4.3.6] (continued)

SIGNAL NAME [1]	DESCRIPTION [2]	TYPE [3]	BALL BOTTOM (CBP Pkg.) [4]	BALL BOTTOM (CBC Pkg.) [4]	BALL BOTTOM (CUS Pkg.) [4]
hsusb0_clk	Dedicated for external transceiver 60-MHz clock input to PHY	I	T28	W19	R21
hsusb0_stp	Dedicated for external transceiver Stop signal	O	T25	U20	R23
hsusb0_dir	Dedicated for external transceiver Data direction control from PHY	I	R28	V19	P23
hsusb0_nxt	Dedicated for external transceiver Next signal from PHY	I	T26	W18	R22
hsusb0_data0	Dedicated for external transceiver Bidirectional data bus	IO	T27	V20	T24
hsusb0_data1	Dedicated for external transceiver Bidirectional data bus	IO	U28	Y20	T23
hsusb0_data2	Dedicated for external transceiver Bidirectional data bus	IO	U27	V18	U24
hsusb0_data3	Dedicated for external transceiver Bidirectional data bus	IO	U26	W20	U23
hsusb0_data4	Dedicated for external transceiver Bidirectional data bus additional signals for 12-pin ULPI operation	IO	U25	W17	W24
hsusb0_data5	Dedicated for external transceiver Bidirectional data bus additional signals for 12-pin ULPI operation	IO	V28	Y18	V23
hsusb0_data6	Dedicated for external transceiver Bidirectional data bus additional signals for 12-pin ULPI operation	IO	V27	Y19	W23
hsusb0_data7	Dedicated for external transceiver Bidirectional data bus additional signals for 12-pin ULPI operation	IO	V26	Y17	T22
MM_FSUSB3					
mm3_rxdm	Vminus receive data (not used in 3- or 4-pin configurations)	IO	AE3	K3	NA
mm3_rxdp	Vplus receive data (not used in 3- or 4-pin configurations)	IO	AH3	M3	NA
mm3_rxrcv	Differential receiver signal input (not used in 3-pin mode)	IO	AD1	U4	NA
mm3_txse0	Single-ended zero. Used as VM in 4-pin VP_VM mode.	IO	AE1	V3	NA
mm3_txdat	USB data. Used as VP in 4-pin VP_VM mode.	IO	AD2	R3	NA
mm3_txen_n	Transmit enable	IO	AC1	T3	NA
MM_FSUSB2					
mm2_rxdm	Vminus receive data (not used in 3- or 4-pin configurations)	IO	AH7	AF7	AD11
mm2_rxdp	Vplus receive data (not used in 3- or 4-pin configurations)	IO	AF7	AF6	AC9
mm2_rxrcv	Differential receiver signal input (not used in 3-pin mode)	IO	AG8	AF9	AC11
mm2_txse0	Single-ended zero. Used as VM in 4-pin VP_VM mode.	IO	AH8	AE9	AD12
mm2_txdat	USB data. Used as VP in 4-pin VP_VM mode.	IO	AB2	T8	R5
mm2_txen_n	Transmit enable	IO	V3	V9	M4
MM_FSUSB1					
mm1_rxdm	Vminus receive data (not used in 3- or 4-pin configurations)	IO	AG9	V2	AD5
mm1_rxdp	Vplus receive data (not used in 3- or 4-pin configurations)	IO	AF10	AB2	AC1
mm1_rxrcv	Differential receiver signal input (not used in 3-pin mode)	IO	AF11	AC3	AD6
mm1_txse0	Single-ended zero. Used as VM in 4-pin VP_VM mode.	IO	AG12	AD4	AC6
mm1_txdat	USB data. Used as VP in 4-pin VP_VM mode.	IO	AH12	AD3	AC7
mm1_txen_n	Transmit enable	IO	AH14	AD2	AD9
HSUSB2					
hsusb2_clk	Dedicated for external transceiver 60-MHz clock input to PHY	O	AE7	AE4	AC3
hsusb2_stp	Dedicated for external transceiver Stop signal	O	AF7	AF6	AC9
hsusb2_dir	Dedicated for external transceiver Data direction control from PHY	I	AG7	AE6	AC10
hsusb2_nxt	Dedicated for external transceiver Next signal from PHY	I	AH7	AF7	AD11
hsusb2_data0	Dedicated for external transceiver Bidirectional data bus	IO	AG8	AF9	AC11
hsusb2_data1	Dedicated for external transceiver Bidirectional data bus	IO	AH8	AE9	AD12
hsusb2_data2	Dedicated for external transceiver Bidirectional data bus	IO	AB2	T8	R5
hsusb2_data3	Dedicated for external transceiver Bidirectional data bus	IO	V3	V9	M4
hsusb2_data4	Dedicated for external transceiver Bidirectional data bus additional signals for 12-pin ULPI operation	IO	Y2	W8	N4
hsusb2_data5	Dedicated for external transceiver Bidirectional data bus additional signals for 12-pin ULPI operation	IO	Y3	U8	N3
hsusb2_data6	Dedicated for external transceiver Bidirectional data bus additional signals for 12-pin ULPI operation	IO	Y4	V8	M5

Copyright © 2010–2011, Texas Instruments Incorporated

Table 2-17. Serial Communication Interfaces – USB Signals Description[Section 4.3.6] (continued)

SIGNAL NAME [1]	DESCRIPTION [2]	TYPE [3]	BALL BOTTOM (CBP Pkg.) [4]	BALL BOTTOM (CBC Pkg.) [4]	BALL BOTTOM (CUS Pkg.) [4]
hsusb2_data7	Dedicated for external transceiver Bidirectional data bus additional signals for 12-pin ULPI operation	IO	AA3	W7	N5
HSUSB1					
hsusb1_clk	Dedicated for external transceiver 60-MHz clock input to PHY	O	AE10	AB3	AD3
hsusb1_stp	Dedicated for external transceiver Stop signal	O	AF10	AB2	AC1
hsusb1_dir	Dedicated for external transceiver data direction control from PHY	I	AF9	AA4	AC4
hsusb1_nxt	Dedicated for external transceiver Next signal from PHY	I	AG9	V2	AD5
hsusb1_data0	Dedicated for external transceiver Bidirectional data bus	IO	AF11	AC3	AD6
hsusb1_data1	Dedicated for external transceiver Bidirectional data bus	IO	AG12	AD4	AC6
hsusb1_data2	Dedicated for external transceiver Bidirectional data bus	IO	AH12	AD3	AC7
hsusb1_data3	Dedicated for external transceiver Bidirectional data bus	IO	AH14	AD2	AD9
hsusb1_data4	Dedicated for external transceiver Bidirectional data bus additional signals for 12-pin ULPI operation	IO	AE11	Y3	AC5
hsusb1_data5	Dedicated for external transceiver Bidirectional data bus additional signals for 12-pin ULPI operation	IO	AH9	AB1	AD2
hsusb1_data6	Dedicated for external transceiver Bidirectional data bus additional signals for 12-pin ULPI operation	IO	AF13	AE3	AC8
hsusb1_data7	Dedicated for external transceiver Bidirectional data bus additional signals for 12-pin ULPI operation	IO	AE13	AA3	AD8

- NA in this table stands for "Not applicable".
- This pin is not supported on the CUS package.

Copyright © 2010–2011, Texas Instruments Incorporated

2.5.4 Removable Media Interfaces

For more information, see MMC/SDIO Card Interface / MMC/SDIO Environment section of the *AM/DM37x Multimedia Device Technical Reference Manual* (literature number SPRUGN4).

Table 2-18. Removable Media Interfaces – MMC/SDIO Signals Description

SIGNAL NAME [1]	DESCRIPTION [2]	TYPE [3]	BALL BOTTOM (CBP Pkg.) [4]	BALL BOTTOM (CBC Pkg.) [4]	BALL BOTTOM (CUS Pkg.) [4]
MULTIMEDIA MEMORY CARD (MMC1) / SECURE DIGITAL IO (SDIO1)					
mmc1_clk	MMC/SD Output Clock	O	N28	N19	M23
mmc1_cmd	MMC/SD command signal	IO	M27	L18	L23
mmc1_dat0	MMC/SD Card Data bit 0 / SPI Serial Input	IO	N27	M19	M22
mmc1_dat1	MMC/SD Card Data bit 1	IO	N26	M18	M21
mmc1_dat2	MMC/SD Card Data bit 2	IO	N25	K18	M20
mmc1_dat3	MMC/SD Card Data bit 3	IO	P28	N20	N23
MULTIMEDIA MEMORY CARD (MMC2) / SECURE DIGITAL IO (SDIO2)					
mmc2_clk	MMC/SD Output Clock	O	AE2	W10	Y1
mmc2_dir_dat0	Direction control for DAT0 signal case an external transceiver used	O	AE4	V10	AB2
mmc2_dir_dat1	Direction control for DAT1 and DAT3 signals case an external transceiver used	O	AH3	M3	AA2
mmc2_dir_dat2	Direction control for DAT2 signal case an external transceiver used	O	AF19	E4	AC17
mmc2_dir_dat3	Direction control for DAT4, DAT5, DAT6, and DAT7 signals case an external transceiver used	O	AE21	G3	AB16
mmc2_clkin	MMC/SD input Clock	I	AE3	K3	AA1
mmc2_dat0	MMC/SD Card Data bit 0	IO	AH5	T10	AB3
mmc2_dat1	MMC/SD Card Data bit 1	IO	AH4	T9	Y3
mmc2_dat2	MMC/SD Card Data bit 2	IO	AG4	U10	W3
mmc2_dat3	MMC/SD Card Data bit 3	IO	AF4	U9	V3
mmc2_dat4	MMC/SD Card Data bit 4	IO	AE4 / AB3	P9 / V10	AB2 / T5
mmc2_dat5	MMC/SD Card Data bit 5	IO	AH3 / AB4	M3/P8	AA2 / R4
mmc2_dat6	MMC/SD Card Data bit 6	IO	AF3 / AA4	L3/P7	Y2 / T4
mmc2_dat7	MMC/SD Card Data bit 7	IO	AE3 / AC2	K3/R7	AA1 / T6
mmc2_dir_cmd	Direction control for CMD signal case an external transceiver is used	O	AF3	L3	Y2
mmc2_cmd	MMC/SD command signal	IO	AG5	R10	AB5
MULTIMEDIA MEMORY CARD (MMC3) / SECURE DIGITAL IO (SDIO3)					
mmc3_clk	MMC/SD Output Clock	O	AB1 / AF10	R9 / AB2	AC1
mmc3_cmd	MMC/SD command signal	IO	AC3 / AE10	R8 / AB3	AD3
mmc3_dat0	MMC/SD Card Data bit 0 / SPI Serial Input	IO	AE4 / AE11	V10 / Y3	AB2 / AC5
mmc3_dat1	MMC/SD Card Data bit 1	IO	AH3 / AH9	M3/AB1	AA2 / AD2
mmc3_dat2	MMC/SD Card Data bit 2	IO	AF3 / AF13	L3/AE3	Y2 / AC8
mmc3_dat3	MMC/SD Card Data bit 3	IO	AE3 / AE13	K3/AA3	AA1 / AD8
mmc3_dat4	MMC/SD Card Data bit 4	IO	AF11	AC3	AD6
mmc3_dat5	MMC/SD Card Data bit 5	IO	AG9	V2	AD5
mmc3_dat6	MMC/SD Card Data bit 6	IO	AF9	AA4	AC4
mmc3_dat7	MMC/SD Card Data bit 7	IO	AH14	AD2	AD9

Copyright © 2010–2011, Texas Instruments Incorporated

2.5.5 Test Interfaces

Table 2-19. Test Interfaces – ETK Signals Description

SIGNAL NAME [1]	DESCRIPTION [2]	TYPE [3]	BALL BOTTOM (CBP Pkg.) [4]	BALL BOTTOM (CBC Pkg.) [4]	BALL BOTTOM (CUS Pkg.) [4]
etk_ctl	ETK trace ctl	O	AE10	AB3	AD3
etk_clk	ETK trace clock	O	AF10	AB2	AC1
etk_d0	ETK data 0	O	AF11	AC3	AD6
etk_d1	ETK data 1	O	AG12	AD4	AC6
etk_d2	ETK data 2	O	AH12	AD3	AC7
etk_d3	ETK data 3	O	AE13	AA3	AD8
etk_d4	ETK data 4	O	AE11	Y3	AC5
etk_d5	ETK data 5	O	AH9	AB1	AD2
etk_d6	ETK data 6	O	AF13	AE3	AC8
etk_d7	ETK data 7	O	AH14	AD2	AD9
etk_d8	ETK data 8	O	AF9	AA4	AC4
etk_d9	ETK data 9	O	AG9	V2	AD5
etk_d10	ETK data 10	O	AE7	AE4	AC3
etk_d11	ETK data 11	O	AF7	AF6	AC9
etk_d12	ETK data 12	O	AG7	AE6	AC10
etk_d13	ETK data 13	O	AH7	AF7	AD11
etk_d14	ETK data 14	O	AG8	AF9	AC11
etk_d15	ETK data 15	O	AH8	AE9	AD12

Table 2-20. Test Interfaces – JTAG Signals Description

SIGNAL NAME [1]	DESCRIPTION [2]	TYPE [3]	BALL BOTTOM (CBP Pkg.) [4]	BALL BOTTOM (CBC Pkg.) [4]	BALL BOTTOM (CUS Pkg.) [4]
jtag_ntrst	Test Reset	I	AA17	U15	AB7
jtag_tck	Test Clock	I	AA13	V14	AB6
jtag_rtck	ARM Clock Emulation	O	AA12	W13	AA7
jtag_tms_tmsc	Test Mode Select	IO	AA18	V15	AA9
jtag_tdi	Test Data Input	I	AA20	U16	AB10
jtag_tdo	Test Data Output	O	AA19	Y13	AB9
jtag_emu0	Test emulation 0	IO	AA11	Y15	AC24
jtag_emu1	Test emulation 1	IO	AA10	Y14	AD24

Copyright © 2010–2011, Texas Instruments Incorporated

Table 2-21. Test Interfaces – SDTI Signals Description

SIGNAL NAME [1]	DESCRIPTION [2]	TYPE [3]	BALL BOTTOM (CBP Pkg.) [4]	BALL BOTTOM (CBC Pkg.) [4]	BALL BOTTOM (CUS Pkg.) [4]	SUBSYSTEM SIGNAL MULTIPLEXING [6]
sdti_clk	Serial clock dual edge	O	AF7 / AA11 / AG8	AF6 / Y15 / AF9	AC9 / AC24 / AC11	etk_d11 / jtag_emu0 / etk_d14
sdti_txd0	Serial data out (System Trace messages)	O	AG7 / AA10 / AA11	AE6 / Y14 / Y15	AC10 / AD24 / AC24	etk_d12 / jtag_emu1 / jtag_emu0
sdti_txd1	Serial data out (System Trace messages)	O	AH7 / AA10	AF7 / Y14	AD11 / AD24	etk_d13 / jtag_emu1
sdti_txd2	Serial data out (System Trace messages)	O	AG8	AF9	AC11	etk_d14
sdti_txd3	Serial data out (System Trace messages)	O	AH8	AE9	AD12	etk_d15

Table 2-22. Test Interfaces – HWDBG Signals Description

SIGNAL NAME [1]	DESCRIPTION [2]	TYPE [3]	BALL BOTTOM (CBP Pkg.) [4]	BALL BOTTOM (CBC Pkg.) [4]	BALL BOTTOM (CUS Pkg.) [4]
hw_dbg0	Debug signal 0	O	A24 / AF10	C23/AB2	AC1/A22
hw_dbg1	Debug signal 1	O	A23 / AE10	D23/AB3	AD3/E18
hw_dbg2	Debug signal 2	O	C27/ AF11	C26/AC3	AD6/J19
hw_dbg3	Debug signal 3	O	C23 / AG12	B23/AD4	AC6/H24
hw_dbg4	Debug signal 4	O	B24 / AH12	A24/AD3	AC7/G19
hw_dbg5	Debug signal 5	O	C24 / AE13	B24/AA3	AD8/F19
hw_dbg6	Debug signal 6	O	D24 / AE11	D24/Y3	AC5/G20
hw_dbg7	Debug signal 7	O	A25 / AH9	C24/AB1	AD2/B21
hw_dbg8	Debug signal 8	O	B25 / AF13	D25/AE3	AC8/F21
hw_dbg9	Debug signal 9	O	C26 / AH14	E26/AD2	AD9/G21
hw_dbg10	Debug signal 10	O	B23 / AF9	A23/AA4	AC4/F18
hw_dbg11	Debug signal 11	O	D25 / AG9	D26/V2	AD5/J20
hw_dbg12	Debug signal 12	O	D28 / AE7	G25/AE4	AC3/G22
hw_dbg13	Debug signal 13	O	D26 / AF7	K24/AF6	AC9/E22
hw_dbg14	Debug signal 14	O	E26 / AG7	G26/AE6	AC10/D24
hw_dbg15	Debug signal 15	O	F28 / AH7	H25/AF7	AD11/E23
hw_dbg16	Debug signal 16	O	F27 / AG8	H26/AF9	AC11/E24
hw_dbg17	Debug signal 17	O	G26 / AH8	J26/AE9	AD12/F23

2.5.6 Miscellaneous

For more information, see Timers / GP Timers / GP Timers Environment section of the *AM/DM37x Multimedia Device Technical Reference Manual* (literature number SPRUGN4).

Table 2-23. Miscellaneous – GP Timer Signals Description

SIGNAL NAME [1]	DESCRIPTION [2]	TYPE [3]	BALL BOTTOM (CBP Pkg.) [4]	BALL BOTTOM (CBC Pkg.) [4]	BALL BOTTOM (CUS Pkg.) [4]
gpt_8_pwm_evt	PWM or event for GP timer 8	IO	N8 / AD25 / V3	C5 / AD21/ V9	G4/ M4
gpt_9_pwm_evt	PWM or event for GP timer 9	IO	T8 / AB26 / Y2	B4 / W8 / Y24	F4 / N4
gpt_10_pwm_evt	PWM or event for GP timer 10	IO	R8 / AB25 / Y3	C4 / U8 / AA24	G5 / N3
gpt_11_pwm_evt	PWM or event for GP timer 11	IO	P8 / AA25 / Y4	B5 / V8 / AD22	F3 / M5

Copyright © 2010–2011, Texas Instruments Incorporated

2.5.7 General-Purpose IOs

For more information, see General-Purpose Interface / General-Purpose Interface Environment section of the *AM/DM37x Multimedia Device Technical Reference Manual* (literature number SPRUGN4).

Table 2-24. General-Purpose IOs Signals Description[(1)]

SIGNAL NAME [1]	DESCRIPTION [2]	TYPE [3]	BALL BOTTOM (CBP Pkg.) [4]	BALL BOTTOM (CBC Pkg.) [4]	BALL BOTTOM (CUS Pkg.) [4]
gpio_0	General-purpose IO 0	IO	AF26	V16	W16
gpio_1	General-purpose IO 1	IO	AF25	W15	Y13
gpio_2	General-purpose IO 2	IO	AH26	F3	AB12
gpio_3	General-purpose IO 3	IO	AG26	D3	AC16
gpio_4	General-purpose IO 4	IO	AE14	C3	AD17
gpio_5	General-purpose IO 5	IO	AF18	E3	AD18
gpio_6	General-purpose IO 6	IO	AF19	E4	AC17
gpio_7	General-purpose IO 7	IO	AE21	G3	AB16
gpio_8	General-purpose IO 8	IO	AF21	D4	AA15
gpio_9	General-purpose IO 9	IO	AF22	V12	AD23
gpio_10	General-purpose IO 10	IO	AG25	AE14	Y7
gpio_11	General-purpose IO 11	IO	AA11	Y15	AC24
gpio_12	General-purpose IO 12	IO	AF10	AB2	AC1
gpio_13	General-purpose IO 13	IO	AE10	AB3	AD3
gpio_14	General-purpose IO 14	IO	AF11	AC3	AD6
gpio_15	General-purpose IO 15	IO	AG12	AD4	AC6
gpio_16	General-purpose IO 16	IO	AH12	AD3	AC7
gpio_17	General-purpose IO 17	IO	AE13	AA3	AD8
gpio_18	General-purpose IO 18	IO	AE11	Y3	AC5
gpio_19	General-purpose IO 19	IO	AH9	AB1	AD2
gpio_20	General-purpose IO 20	IO	AF13	AE3	AC8
gpio_21	General-purpose IO 21	IO	AH14	AD2	AD9
gpio_22	General-purpose IO 22	IO	AF9	AA4	AC4
gpio_23	General-purpose IO 23	IO	AG9	V2	AD5
gpio_24	General-purpose IO 24	IO	AE7	AE4	AC3
gpio_25	General-purpose IO 25	IO	AF7	AF6	AC9
gpio_26	General-purpose IO 26	IO	AG7	AE6	AC10
gpio_27	General-purpose IO 27	IO	AH7	AF7	AD11
gpio_28	General-purpose IO 28	IO	AG8	AF9	AC11
gpio_29	General-purpose IO 29	IO	AH8	AE9	AD12
gpio_30	General-purpose IO 30	IO	AF24	AD7	Y10
gpio_31	General-purpose IO 31	IO	AA10	Y14	AD24
gpio_34	General-purpose IO 34	IO	N4	J2	K4
gpio_35	General-purpose IO 35	IO	M4	H1	K3
gpio_36	General-purpose IO 36	IO	L4	H2	K2
gpio_37	General-purpose IO 37	IO	K4	G2	J4
gpio_38	General-purpose IO 38	IO	T3	F1	J3
gpio_39	General-purpose IO 39	IO	R3	F2	J2
gpio_40	General-purpose IO 40	IO	N3	E1	J1
gpio_41	General-purpose IO 41	IO	M3	E2	H1
gpio_42	General-purpose IO 42	IO	L3	D1	H2
gpio_43	General-purpose IO 43	IO	K3	D2	G2
gpio_44	General-purpose IO 44	IO	H2	V1	R2
gpio_45	General-purpose IO 45	IO	K2	Y1	T2
gpio_46	General-purpose IO 46	IO	P1	T1	U1
gpio_47	General-purpose IO 47	IO	R1	U2	R3

Copyright © 2010–2011, Texas Instruments Incorporated

Table 2-24. General-Purpose IOs Signals Description[(1)] (continued)

SIGNAL NAME [1]	DESCRIPTION [2]	TYPE [3]	BALL BOTTOM (CBP Pkg.) [4]	BALL BOTTOM (CBC Pkg.) [4]	BALL BOTTOM (CUS Pkg.) [4]
gpio_48	General-purpose IO 48	IO	R2	U1	T3
gpio_49	General-purpose IO 49	IO	T2	P1	U2
gpio_50	General-purpose IO 50	IO	W1	L2	V1
gpio_51	General-purpose IO 51	IO	Y1	M2	V2
gpio_52	General-purpose IO 52	IO	H3	AD1	NA
gpio_53	General-purpose IO 53	IO	V8	A3	NA
gpio_54	General-purpose IO 54	IO	U8	B6	D2
gpio_55	General-purpose IO 55	IO	T8	B4	F4
gpio_56	General-purpose IO 56	IO	R8	C4	G5
gpio_57	General-purpose IO 57	IO	P8	B5	F3
gpio_58	General-purpose IO 58	IO	N8	C5	G4
gpio_59	General-purpose IO 59	IO	T4	N1	W2
gpio_60	General-purpose IO 60	IO	G3	K2	K5
gpio_61	General-purpose IO 61	IO	U3	J1	L1
gpio_62	General-purpose IO 62	IO	H1	AC6	E1
gpio_63	General-purpose IO 63	IO	L8	AC8	NA
gpio_64	General-purpose IO 64	IO	K8	B3	NA
gpio_65	General-purpose IO 65	IO	J8	C6	C2
gpio_66	General-purpose IO 66	IO	D28	G25	G22
gpio_67	General-purpose IO 67	IO	D26	K24	E22
gpio_68	General-purpose IO 68	IO	D27	M25	F22
gpio_69	General-purpose IO 69	IO	E27	F26	J21
gpio_70	General-purpose IO 70	IO	AG22	AE21	AC19
gpio_71	General-purpose IO 71	IO	AH22	AE22	AB19
gpio_72	General-purpose IO 72	IO	AG23	AE23	AD20
gpio_73	General-purpose IO 73	IO	AH23	AE24	AC20
gpio_74	General-purpose IO 74	IO	AG24	AD23	AD21
gpio_75	General-purpose IO 75	IO	AH24	AD24	AC21
gpio_76	General-purpose IO 76	IO	E26	G26	D24
gpio_77	General-purpose IO 77	IO	F28	H25	E23
gpio_78	General-purpose IO 78	IO	F27	H26	E24
gpio_79	General-purpose IO 79	IO	G26	J26	F23
gpio_80	General-purpose IO 80	IO	AD28	AC26	AC22
gpio_81	General-purpose IO 81	IO	AD27	AD26	AC23
gpio_82	General-purpose IO 82	IO	AB28	AA25	AB22
gpio_83	General-purpose IO 83	IO	AB27	Y25	Y22
gpio_84	General-purpose IO 84	IO	AA28	AA26	W22
gpio_85	General-purpose IO 85	IO	AA27	AB26	V22
gpio_86	General-purpose IO 86	IO	G25	L25	J22
gpio_87	General-purpose IO 87	IO	H27	L26	G23
gpio_88	General-purpose IO 88	IO	H26	M24	G24
gpio_89	General-purpose IO 89	IO	H25	M26	H23
gpio_90	General-purpose IO 90	IO	E28	F25	D23
gpio_91	General-purpose IO 91	IO	J26	N24	K22
gpio_92	General-purpose IO 92	IO	AC27	AC25	V21
gpio_93	General-purpose IO 93	IO	AC28	AB25	W21
gpio_94	General-purpose IO 94	IO	A24	C23	A22
gpio_95	General-purpose IO 95	IO	A23	D23	E18
gpio_96	General-purpose IO 96	IO	C25	C25	B22
gpio_97	General-purpose IO 97	IO	C27	C26	J19
gpio_98	General-purpose IO 98	IO	C23	B23	H24

Copyright © 2010–2011, Texas Instruments Incorporated

Table 2-24. General-Purpose IOs Signals Description[1] (continued)

SIGNAL NAME [1]	DESCRIPTION [2]	TYPE [3]	BALL BOTTOM (CBP Pkg.) [4]	BALL BOTTOM (CBC Pkg.) [4]	BALL BOTTOM (CUS Pkg.) [4]
gpio_99	General-purpose IO 99	I	AG17	AE16	AB18
gpio_100	General-purpose IO 100	I	AH17	AE15	AC18
gpio_101	General-purpose IO 101	IO	B24	A24	G19
gpio_102	General-purpose IO 102	IO	C24	B24	F19
gpio_103	General-purpose IO 103	IO	D24	D24	G20
gpio_104	General-purpose IO 104	IO	A25	C24	B21
gpio_105	General-purpose IO 105	I	K28	P25	L24
gpio_106	General-purpose IO 106	I	L28	P26	K24
gpio_107	General-purpose IO 107	I	K27	N25	J23
gpio_108	General-purpose IO 108	I	L27	N26	K23
gpio_109	General-purpose IO 109	IO	B25	D25	F21
gpio_110	General-purpose IO 110	IO	C26	E26	G21
gpio_111	General-purpose IO 111	IO	B26	E25	C22
gpio_112	General-purpose IO 112	I	AG19	AD17	NA
gpio_113	General-purpose IO 113	I	AH19	AD16	NA
gpio_114	General-purpose IO 114	I	AG18	AE18	NA
gpio_115	General-purpose IO 115	I	AH18	AE17	NA
gpio_116	General-purpose IO 116	IO	P21	U18	V20
gpio_117	General-purpose IO 117	IO	N21	R18	T21
gpio_118	General-purpose IO 118	IO	R21	T18	V19
gpio_119	General-purpose IO 119	IO	M21	R19	R20
gpio_120	General-purpose IO 120	IO	N28[3] / T28	W19 / N19[3]	M23[3] / R21
gpio_121	General-purpose IO 121	IO	M27[3] / T25	U20 / L18[3]	L23[3] / R23
gpio_122	General-purpose IO 122	IO	N27[3] / R28	V19 / M19[3]	M22[3] / P23
gpio_123	General-purpose IO 123	IO	N26[3]	M18[3]	M21[3]
gpio_124	General-purpose IO 124	IO	N25[3] / T26	W18 / K18[3]	M20[3]/R22
gpio_125	General-purpose IO 125	IO	P28[3] / T27	V20 / N20[3]	N23[3]/T24
gpio_126	General-purpose IO 126	IO	D25 / P27[3]	M20[3] / D26	J20 / N22[3]
gpio_127	General-purpose IO 127	IO	P26[3]	P17[3]	NA
gpio_128	General-purpose IO 128	IO	R27	P18	NA
gpio_129	General-purpose IO 129	IO	R25[3]	P19[3]	P24[3]
gpio_130	General-purpose IO 130	IO	AE2 / U28	Y20 / W10	Y1 / T23
gpio_131	General-purpose IO 131	IO	AG5 / U27	V18 / R10	AB5 / U24
gpio_132	General-purpose IO 132	IO	AH5	T10	AB3
gpio_133	General-purpose IO 133	IO	AH4	T9	Y3
gpio_134	General-purpose IO 134	IO	AG4	U10	W3
gpio_135	General-purpose IO 135	IO	AF4	U9	V3
gpio_136	General-purpose IO 136	IO	AE4	V10	AB2
gpio_137	General-purpose IO 137	IO	AH3	M3	AA2
gpio_138	General-purpose IO 138	IO	AF3	L3	Y2
gpio_139	General-purpose IO 139	IO	AE3	K3	AA1
gpio_140	General-purpose IO 140	IO	AF6	P3	V6
gpio_141	General-purpose IO 141	IO	AE6	N3	V5
gpio_142	General-purpose IO 142	IO	AF5	U3	W4
gpio_143	General-purpose IO 143	IO	AE5	W3	V4
gpio_144	General-purpose IO 144	IO	AB26	Y24	NA
gpio_145	General-purpose IO 145	IO	AB25	AA24	NA
gpio_146	General-purpose IO 146	IO	AA25	AD22	NA
gpio_147	General-purpose IO 147	IO	AD25	AD21	NA
gpio_148	General-purpose IO 148	IO	AA8	L4	W7
gpio_149	General-purpose IO 149	IO	AA9	R2	W6

Copyright © 2010–2011, Texas Instruments Incorporated

Table 2-24. General-Purpose IOs Signals Description[(1)] (continued)

SIGNAL NAME [1]	DESCRIPTION [2]	TYPE [3]	BALL BOTTOM (CBP Pkg.) [4]	BALL BOTTOM (CBC Pkg.) [4]	BALL BOTTOM (CUS Pkg.) [4]
gpio_150	General-purpose IO 150	IO	W8	W2	AC2
gpio_151	General-purpose IO 151	IO	Y8	H3	V7
gpio_152	General-purpose IO 152	IO	AE1	V3	NA
gpio_153	General-purpose IO 153	IO	AD1	U4	NA
gpio_154	General-purpose IO 154	IO	AD2	R3	NA
gpio_155	General-purpose IO 155	IO	AC1	T3	NA
gpio_156	General-purpose IO 156	IO	Y21	U19	W19
gpio_157	General-purpose IO 157	IO	AA21	V17	AB20
gpio_158	General-purpose IO 158	IO	V21	U17	W18
gpio_159	General-purpose IO 159	IO	U21	T20	Y18
gpio_160	General-purpose IO 160	IO	T21	T19	AA18
gpio_161	General-purpose IO 161	IO	K26	P20	AA19
gpio_162	General-purpose IO 162	IO	W21	T17	V18
gpio_163	General-purpose IO 163	IO	H18	F23	A23
gpio_164	General-purpose IO 164	IO	H19	F24	B23
gpio_165	General-purpose IO 165	IO	H20	H24	B24
gpio_166	General-purpose IO 166	IO	H21	G24	C23
gpio_167	General-purpose IO 167	IO	B23	A23	F18
gpio_168	General-purpose IO 168	IO	AF15	C2	AC15
gpio_169	General-purpose IO 169	IO	U26	W20	U23
gpio_170	General-purpose IO 170	IO	J25	J23	A24
gpio_171	General-purpose IO 171	IO	AB3	P9	T5
gpio_172	General-purpose IO 172	IO	AB4	P8	R4
gpio_173	General-purpose IO 173	IO	AA4	P7	T4
gpio_174	General-purpose IO 174	IO	AC2	R7	T6
gpio_175	General-purpose IO 175	IO	AC3	R8	NA
gpio_176	General-purpose IO 176	IO	AB1	R9	NA
gpio_177	General-purpose IO 177	IO	AB2	T8	R5
gpio_178	General-purpose IO 178	IO	AA3	W7	N5
gpio_179	General-purpose IO 179	IO	Y2	W8	N4
gpio_180	General-purpose IO 180	IO	Y3	U8	N3
gpio_181	General-purpose IO 181	IO	Y4	V8	M5
gpio_182	General-purpose IO 182	IO	V3	V9	M4
gpio_183	General-purpose IO 183	IO	AE15	C1	AC14
gpio_184	General-purpose IO 184	IO	AF14	AB4	AC13
gpio_185	General-purpose IO 185	IO	AG14	AC4	AC12
gpio_186	General-purpose IO 186	IO	AE22	W11	AA6
gpio_188	General-purpose IO 188	IO	U25	W17	W24
gpio_189	General-purpose IO 189	IO	V28	Y18	V23
gpio_190	General-purpose IO 190	IO	V27	Y19	W23
gpio_191	General-purpose IO 191	IO	V26	Y17	T22

(1) NA in table stands for "Not Applicable".

(2) The subsystem pin multiplexing options are not described in Table 2-1 and Table 2-4.

(3) The usage of this GPIO is strongly restricted. For more information, see the General-Purpose Interface / General-Purpose Interface Environment section of the *AM/DM37x Multimedia Device Technical Reference Manual* (literature number SPRUGN4).

Copyright © 2010–2011, Texas Instruments Incorporated

2.5.8 Power Supplies

Note: For more information, see Power Reset and Clock Management / PRCM Environment and the Power, Reset, and Clock Management / PRCM Functional Description / PRCM Voltage Management Functional Description sections of the *AM/DM37x Multimedia Device Technical Reference Manual* (literature number SPRUGN4).

Table 2-25. Power Supplies Signals Description[(1)]

SIGNAL NAME [1]	DESCRIPTION [2]	BALL BOTTOM (CBP Pkg.) [4]	BALL TOP (CBP Pkg.) [(2)][5]	BALL BOTTOM (CBC Pkg.) [4]	BALL TOP (CBC Pkg.) [(2)][5]	BALL BOTTOM (CUS Pkg.) [(2)] [4]
vdd_mpu_iva	MPU/IVA power supply	Y9 / W9 / T9 / R9 / M9 / L9 / J9 / Y10 / U10 / T10 / R10 / N10 / M10 / L10 / J10 / Y11 / W11 / K11 / J11 / W12 / K13 / Y14 / K14 / J14 / Y15 / W15 / J15	NA	H7/ N7/ U7/ V7/ N8/ G9/ L9/ M9/ W9/ Y9/ M10/ P10/ K11/ U11/ V11/ Y11/ G12/ D13/ U13	NA	W13/ W12/ V13/ V12/ U13/ U12/ T8/ T7/ R8/ R7/ R6/ N8/ N7/ N6/ M12/ M8/ M7/ M6/ L12/ L11/ J10/ J9/ H10/ H9/ G10/ G9/F10
vdd_core	Core power domain	AC4 / J4 / H4 / D8 / AE9 / D9 / D15 / Y16 / AE18 / Y18 / W18 / K18 / J18 / AE19 / Y19 / U19 / T19 / N19 / M19 / J19 / Y20 / W20 / V20 / U20 / P20 / N20 / K20 / J20 / D22 / D23 / AE24 / M25 / L25 / E25	NA	M7/ T7/ Y8/ G11/ Y12/ D15/ M17/ G18/ H20/ R20/ AC21	NA	T20/ T19/ T18/ T17/ R19/ R18/ R17/ M15/ M14/ L15/ L14/ K19/ K18/ K17/ J18/ J17/ H13/ H12/ G13/ G12/ F13/ F12
cap_vddu_wkup_ logic	Decoupling capacitor for WKUP/EMU domains (logic)	AA15	NA	K14	NA	Y12
vdda_dplls_dll	Input power for the analog part of the MPU, CORE DPLLs, IVA, and the DLL	K15	NA	K13	NA	G18
vdda_dac	Video DAC power plane	V25	NA	V25	NA	AB13
vssa_dac	Video DAC ground plane	Y26	NA	V24	NA	AB15
vdds	1.8-V power for standard IOs	AD3 / AD4 / W4 / AF8 / AE8 / AF16 / AE16 / AF23 / AE23 / F25 / F26 / AG27	NA	G4/ M4/ T4/ Y4/ L7/ AC7/ D9/ AE10/ C11/ J15/ AC15/ A18/ J18/ AC18/ AD20/ E24/ L24/ T24/ W24/ AC24 / AB24	A3 / A15 / B5 / F2 / F21/ L20 / W21	Y9 / W10 / W9 / V10 / V9 / U10 / N19 / N18 / N17 / M19 / M18 / M17
vdds_mem	Memory IO power plane	U1 / J1 / F1 / J2 / F2 / R4 / B5 / A5 / AH6 / B8 / A8 / B12 / A12 / D16 / C16 / B18 / A18 / B22 / A22 / G28 / C28	AC5 / P1 / H1 / F23 / E1 / C23 / A4 / A7 / A10 / A15 / A18	NA	NA	K8 / K7 / K6 / J8 / J7 / J6 / H15 / G16 / G15 / F16 / F15 / E16
vdda_dpll_per	Input power for the analog part of the Peripheral DPLLs	AA16	NA	U14	NA	U17
vdda_wkup_bg_bb	For wakeup LDO and VDDA (2 LDOs SRAM and BG)	AA14	NA	W14	NA	AA13

Copyright © 2010–2011, Texas Instruments Incorporated

Table 2-25. Power Supplies Signals Description[1] (continued)

SIGNAL NAME [1]	DESCRIPTION [2]	BALL BOTTOM (CBP Pkg.) [4]	BALL TOP (CBP Pkg.) [2][5]	BALL BOTTOM (CBC Pkg.) [4]	BALL TOP (CBC Pkg.) [2][5]	BALL BOTTOM (CUS Pkg.) [2] [4]
vss	Ground	AG2 / U2 / B2 / AG3 / W3 / P3 / J3 / E3 / A3 / P4 / E4 / AG6 / D7 / C7 / V9 / U9 / P9 / N9 / K9 / W10 / V10 / P10 / K10 / D10 / C10 / AF12 / AE12 / Y12 / K12 / J12 / Y13 / W13 / J13 / D13 / C13 / W14 / K16 / J16 / W17 / K17 / J17 / W19 / V19 / R19 / P19 / L19 / K19 / D19 / C19 / AF20 / AE20 / T20 / R20 / M20 / L20 / D21 / C22 / AC25 / Y25 / W25 / AC26 / R26 / L26 / A26 / G27 / B27	H2 / B18 / AB5 / AB14 / AB20 / P2 / F22 / E2 / C22 / B4 / B7 / B10 / B15	G1/ K1/ R1/ W1/ B2/ H4/ N4/ R4/ W4/ AB5/ A6/ D7/ Y7/AE7/ A8/ G8/ D10/ G10/ L10/ N10/ Y10/ AC10/ C12/ D12/A13/ D14/ AD14/ K15/ Y16/ L17/ N17/ R17/ D18/ D20/G20/ E22/ AB22/ G23/ L23/ T23/ W23/ B25/ K25/U25/ AD25 / Y26	C1/ F1/ H2/ M2/ R2/ Y6/AA7/ Y11/ AA16/ W20/P20/ L21/ H20/ F20/ B14/A13/ A7	V16/ V15/ U16/ U15/ U14/ U11/ U9/T16/ T15/ T14/ T13/ T12/ T11/ T10/ T9/ R15/ R14/ R11/ R10/ P17/ P15/ P14/ P13/P12/ P11/ P10/ P8/ N16/ N15/ N14/ N13/ N12/ N11/ N10/ N9/ M16/ M13/ M11/ M10/ M9/ L17/ L13/ L10/ L8/ K15/ K14/ K11/ K10/ J16/ J15/ J14/ J13/ J12/ J11/H16/ H14/ H11
vdds_sram	SRAM LDOs	W16	NA	U12	NA	AA12
vdds_mmc1	Input power for MMC1 dual voltage buffers	K25	NA	N23	NA	N24
vdds_x	Power supply for dual voltage GPIOs	P25	NA	P23	NA	H8
vss	Ground	M28	NA	L19	NA	NA
vdds	IO power plane	AG20	NA	AD18	NA	NA
vss	Ground	AG16	NA	AC16	NA	NA
vdds	IO power plane	H28	NA	L20	NA	NA
cap_vdd_sram_mpu_iva	Decoupling capacitor for SRAM in processor domains	V4	NA	N9	NA	U8
cap_vdd_sram_core	Decoupling capacitor for CORE domain (SRAM)	L21	NA	K20	NA	H17
vdds	IO power plane	AG21	NA	AD19	NA	NA
cap_vddu_array	Decoupling capacitor for WKUP/EMU domains (array)	AH20	NA	AE19	NA	N20
vss	Ground	AH21	NA	AC19	NA	NA
cap_vdd_bb_mpu_iva	Decoupling capacitor for processor domains (bb)	U4	NA	D6	NA	N21
sys_xtalgnd	Kelvin ground	Y17	NA	AF23	NA	W15

(1) NA in this table stands for "Not applicable".

(2) For a list of pins not supported on a particular package, see Table 2-4.

2.5.9 System and Miscellaneous Terminals

Note: For more information, see the Power, Reset, and Clock Management / PRCM Environment section of the *AM/DM37x Multimedia Device Technical Reference Manual* (literature number SPRUGN4).

Table 2-26. System and Miscellaneous Signals Description(1)

SIGNAL NAME [1]	DESCRIPTION [2]	TYPE [3]	BALL BOTTOM (CBP Pkg.) [4]	BALL TOP (CBP Pkg.) (2)[5]	BALL BOTTOM (CBC Pkg.) [4]	BALL TOP (CBC Pkg.) (2)[5]	BALL BOTTOM (CUS Pkg.) [4]
sys_32k	32-kHz clock input	I	AE25	NA	AE20	NA	AA16
sys_xtalin	Main input clock. Oscillator input or LVCMOS at 19.2, 13, or 12 MHz.	AI-I	AE17	NA	AF19	NA	AD15
sys_xtalout	Output of oscillator	AO	AF17	NA	AF20	NA	AD14
sys_altclk	Alternate clock source selectable for GPTIMERs (maximum 54 MHz), USB (48 MHz), or NTSC/PAL (54 MHz)	I	J25	NA	J23	NA	A24
sys_clkreq	Request from device for system clock (open source type)	IO	AF25	NA	W15	NA	Y13
sys_clkout1	Configurable output clock1	O	AG25	NA	AE14	NA	Y7
sys_clkout2	Configurable output clock2	O	AE22	NA	W11	NA	AA6
sys_boot0	Boot configuration mode bit 0	I	AH26	NA	F3	NA	AB12
sys_boot1	Boot configuration mode bit 1	I	AG26	NA	D3	NA	AC16
sys_boot2	Boot configuration mode bit 2	I	AE14	NA	C3	NA	AD17
sys_boot3	Boot configuration mode bit 3	I	AF18	NA	E3	NA	AD18
sys_boot4	Boot configuration mode bit 4	I	AF19	NA	E4	NA	AC17
sys_boot5	Boot configuration mode bit 5	I	AE21	NA	G3	NA	AB16
sys_boot6	Boot configuration mode bit 6	I	AF21	NA	D4	NA	AA15
sys_nrespwron	Power On Reset	I	AH25	NA	V13	NA	AA10
sys_nreswarm	Warm Boot Reset (open drain output)	IOD	AF24	NA	AD7	AA5	Y10
sys_nirq	External FIQ input	I	AF26	NA	V16	NA	W16
sys_nvmode1	Indicates the voltage mode	O	AD26	NA	AD15	NA	Y16
sys_nvmode2	Indicates the voltage mode	O	AE26	NA	W16	NA	Y15
sys_off_mode	Indicates the voltage mode	O	AF22	NA	V12	NA	AD23
sys_ndmareq0	External A request 0 (system expansion). Level (active low) or edge (falling) selectable.	I	U8	NA	B6	NA	D2
sys_ndmareq1	External A request 1 (system expansion). Level (active low) or edge (falling) selectable.	I	T8 / J8	NA	B4 / C6	NA	F4 / C2
sys_ndmareq2	External A request 2 (system expansion). Level (active low) or edge (falling) selectable.	I	L3 / R8	NA	D1 / C4	NA	H2 / G5
sys_ndmareq3	External A request 3 (system expansion). Level (active low) or edge (falling) selectable.	I	K3 / P8	NA	D2 / B5	NA	G2 / F3

(1) NA in this table stands for "Not applicable".

(2) For a list of pins not supported on a particular package, see Table 2-4.

Table 2-27. CBC Package Feed-Through Balls

JEDEC 14x14mm, 0.65mm, 152ball	JEDEC DESCRIPTION (1)	BALL TOP	BALL BOTTOM	FEED-THROUGH BALL NAME
NC	No Connect	A1	A1	pop_a1_a1
d-vdd	DDR Supply	J1	L1	pop_j1_l1
NC	No Connect	AA1	AF1	NC
f-vdd	Flash Supply	N2	T2	pop_n2_t2
f-vdd	Flash Supply	T2	Y2	pop_t2_y2
NC	No Connect	W2	AE2	pop_w2_ae2
NC	No Connect	Y2	AF4	pop_y2_af4
f-vdd	Flash Supply	AA6	AF5	pop_aa6_af5
f-vdd	Flash Supply	Y7	AF8	pop_y7_af8

Copyright © 2010–2011, Texas Instruments Incorporated

Table 2-27. CBC Package Feed-Through Balls (continued)

NC, Int	No Connect; Interrupt when using OneNAND POP	Y9	AF10	pop_y9_af10
f-nbe0, cle0	No Connect/CLE	AA10	AF12	pop_aa10_af12
d-vdd	DDR Supply/ POP FLASH vpp supply	AA11	AF13	pop_aa11_af13
d-tq	No Connect/ DDR die temperature sensor	AA12	AF14	pop_aa12_af14
vss	Shared Ground	AA13	AF15	pop_aa13_af15
d-vdd	DDR Supply	Y14	AF17	pop_y14_af17
d-vddq	DDR Supply	AA14	AF16	pop_aa14_af16
d-vdd	DDR Supply	B16	A20	pop_b16_a20
vss	Shared Ground	Y17	AF21	pop_y17_af21
d-vdd	DDR Supply	AA17	AF18	pop_aa17_af18
vss	Shared Ground	Y19	AF24	pop_y19_af24
d-vddq	DDR Supply	AA19	AF22	pop_aa19_af22
NC	No Connect	A20	A25	pop_a20_a25
NC	No Connect	Y20	AE25	pop_y20_ae25
NC	No Connect	AA20	AF25	pop_aa20_af25
NC	No Connect	A21	A26	pop_a21_a26
NC	No Connect	B21	B26	pop_b21_b26
d-vdd	DDR Supply	H21	K26	pop_h21_k26
d-vdd	DDR Supply	P21	U26	pop_p21_u26
NC	No Connect	Y21	AE26	pop_y21_ae26
NC	No Connect	AA21	AF26	pop_aa21_af26

(1) For more details on the feedthrough pin connections, please refer to the PoP memory datasheet.

Table 2-28. CBP Package Feed-Through Balls

JEDEC 12x12, 0.5mm, 168ball	JEDEC DESCRIPTION (1)	BALL TOP	BALL BOTTOM	FEED-THROUGH BALL NAME
d-vdd	DDR Supply	A12	A15	pop_a12_a15
d-vdd	DDR Supply	AA23	AE28	pop_aa23_ae28
d-vdd	DDR Supply	H23	AF28	pop_h23_af28
d-vdd	DDR Supply	K1	J28	pop_k1_j28
d-vdd	DDR Supply	Y23	M1	pop_y23_m1
f-vdd	Flash Supply	AA1	AA1	pop_aa1_aa1
f-vdd	Flash Supply	AC8	AF1	pop_ac8_af1
f-vdd	Flash Supply	AC13	AH10	pop_ac13_ah10
f-vdd	Flash Supply	L1	AH15	pop_l1_ah15
f-vdd	Flash Supply	U1	N1	pop_u1_n1
f-vpp	Flash vpp supply	AC11	AH13	pop_ac11_ah13
NC, int0	No Connect/PoP OneNAND interrupt	AB9	AG11	pop_ab9_ag11
NC, int1	No Connect/PoP OneNAND interrupt	AC9	AH11	pop_ac9_ah11
NC	No Connect	A1	A1	NC
NC	No Connect	A2	A2	NC
NC	No Connect	A22	A27	pop_a22_a27
NC	No Connect	A23	A28	pop_a23_a28
NC	No Connect	AB1	AG1	pop_ab1_ag1
NC	No Connect	AB23	AG28	pop_ab23_ag28
NC	No Connect	AC1	AH1	pop_ac1_ah1
NC	No Connect	AC2	AH2	pop_ac2_ah2
NC	No Connect	AC22	AH27	pop_ac22_ah27
NC	No Connect	AC23	AH28	pop_ac23_ah28

Copyright © 2010–2011, Texas Instruments Incorporated

Table 2-28. CBP Package Feed-Through Balls (continued)

NC	No Connect	B1	B1	NC
NC	No Connect	B23	B28	pop_b23_b28
f-rst#, rp#	Flash reset	AB11	AG13	pop_ab11_ag13
d-tq	DDR temperature alert	AC14	AH16	pop_ac14_ah16
vss	Shared Ground	AA2	AA2	pop_aa2_aa2
vss	Shared Ground	U2	AF2	pop_u2_af2
vss	Shared Ground	AA22	AF27	pop_aa22_af27
vss	Shared Ground	AB8	AG10	pop_ab8_ag10
vss	Shared Ground	AB13	AG15	pop_ab13_ag15
vss	Shared Ground	B12	B15	pop_b12_b15
vss	Shared Ground	H22	J27	pop_h22_j27
vss	Shared Ground	K2	M2	pop_k2_m2
vss	Shared Ground	K22	M26	pop_k22_m26
vss	Shared Ground	L2	N2	pop_l2_n2

(1) For more details on the feedthrough pin connections, please refer to the PoP memory datasheet.

Copyright © 2010–2011, Texas Instruments Incorporated

3 Electrical Characteristics

NOTE

For more information, see the Power Reset and Clock Management / PRCM Environment section of the AM/DM37x Multimedia Device Technical Reference Manual (literature number SPRUGN4).

3.1 Absolute Maximum Ratings

Stresses beyond those listed as absolute maximum ratings may cause permanent damage to the device. These are stress ratings only, and functional operation of the device at these or any other conditions beyond those listed under "Recommended Operating Conditions" is not implied. Exposure to absolute maximum rated conditions for extended periods may affect device reliability.

Table 3-1. Absolute Maximum Rating over Junction Temperature Range

PARAMETER				MIN	MAX	UNIT
vdd_mpu_iva	Supply voltage range for MPU / IVA domain			–0.5	1.5	V
vdd_core	Supply voltage range for core domain			–0.5	1.5	V
vdda_wkup_bg_bb	Supply voltage range for wake-up domain (internal LDO)			–0.5	2.1	V
vdda_dplls_dll	Supply voltage for MPU, IVA, Core DPLLs, and DLL			–0.5	2.1	V
vdda_dpll_per	Supply voltage for DPLLs (peripherals)			–0.5	2.1	V
vdds_sram	Supply voltage for SRAM LDOs			–0.5	2.1	V
vdda_dac	Supply voltage for video buffers and DAC			–0.5	2.1	V
vdds	Supply voltage for 1.8-V I/O macros			–0.5	2.1	V
vdds_mem	Supply voltage for memory buffers			–0.5	2.1	V
vdds_mmc1	Supply voltage range for mmc1 dual voltage IOs			–0.5	3.8	V
vdds_x	Supply voltage range for dual voltage GPIOs			–0.5	3.8	V
V_{ESD}	ESD stress voltage(1)	HBM (Human Body Model)(2)	JTAG(9)	200		V
			CAM(6)	400		
			GPMC(8)	500		
			Other signals	1000		
		CDM (Charged Device Model)(3)		250		
I_{IOI}	Current-pulse injection on each IO pin(5)			200		mA
I_{clamp}	Clamp current for an input or output			–20	20	mA
T_{STG} (4)	Storage temperature range			–65	150	°C

(1) Electrostatic discharge (ESD) to measure device sensitivity/immunity to damage caused by electrostatic discharges into the device.

(2) Level listed above is the passing level per ANSI/ESDA/JEDEC JS-001-2010. JEDEC document JEP155 states that 500V HBM allows safe manufacturing with a standard ESD control process, and manufacturing with less than 500V HBM is possible if necessary precautions are taken. Pins listed as 1000V may actually have higher performance.

(3) Level listed above is the passing level per EIA-JEDEC JESD22-C101E. JEDEC document JEP157 states that 250V CDM allows safe manufacturing with a standard ESD control process. Pins listed as 250V may actually have higher performance.

(4) For tape and reel the storage temperature range is [–10°C; +50°C] with a maximum relative humidity of 70%. It is recommended returning to ambient room temperature before usage.

(5) Each device is tested with an IO pin injection of 200 mA with a stress voltage of 1.5 times the maximum Vdd at room temperature.

(6) Corresponding signals: cam_d0, cam_d1, cam_d6, cam_d7, cam_d8, cam_d9. Refer to Multiplexing Characteristicsto determine the ball information per package.

(7) Corresponding signals: dss_data0, dss_data1, dss_data2, dss_data3, dss_data4, dss_data5. Refer to Multiplexing Characteristics to determine the ball information per package.

(8) Corresponding signals: All 46 GPMC interface signals (vdds_mem is not included to this exception list). Refer to Multiplexing Characteristics to determine the ball information per package.

(9) Corresponding signals: All 8 JTAG interface signals (jtag_emu0, jtag_emu1, jtag_ntrst, jtag_rtck, jtag_tck, jtag_tdi, jtag_tdo, jtag_tms_tmsc). Refer to Multiplexing Characteristics to determine the ball information per package.

Copyright © 2010–2011, Texas Instruments Incorporated

Table 3-2 summarizes the power consumption at the ball level.

Table 3-2. Maximum Current Ratings at Ball Level [3]

PARAMETER				MAX	UNIT
SIGNAL	DESCRIPTION				
vdd_mpu_iva[7]	Maximum current rating for MPU / IVA domain	Processors	DM3730/DM3725 (1G Hz)	1400[1][4]	mA
			DM3730/DM3725 (800M Hz)	1200[5]	
			DM3730/DM3725 (600M Hz)	800[5]	
vdd_core[1]	Maximum current rating for core domain	Core	DM3730	300	mA
			DM3725	230	
vdds	Maximum current rating for 1.8-V I/O macros			60	mA
vdds_mem	Maximum current rating for memory buffers			35	mA
vdds_mmc1[2]	Maximum current rating for mmc1 dual voltage buffers			20	mA
vdds_x	Maximum current rating for GPIO dual voltage buffers			2	mA
vdda_wkup_bg_bb	Maximum current rating for wake-up, bandgap and VBB LDOs			5	mA
vdda_dac	Maximum current rating for video buffers and DAC			60	mA
vdda_dplls_dll	Maximum current rating for MPU, IVA, core DPLLs and DLL			30	mA
vdda_dpll_per	Maximum current rating for DPLLs (peripherals)			10	mA
vdds_sram	Maximum current rating for SRAM LDOs (common)			41	mA

(1) With SmartReflex™ enabled.

(2) MMC card and I/O card are not included.

(3) The maximum current ratings documented in this table are preliminary data which are subject to change.

(4) Conditions used for maximum current ratings are worst case:
- T_J is up to 90C
- Cold process is used
- V_{DD1} (vdd_mpu_iva) supplies 1.38 V (maximum voltage supported)

In these conditions, the current listed as 1400mV is the addition of the:
- Current when running Dhrystone on ARM@1GHz multiplied by a factor x1.5 (to take care of NEON activity)
- Current when running H.264 on IVA@800MHz with a x1.1 factor (to take care of more aggressive SW than H.264)

(5) Conditions used for maximum current ratings are worst case:
- T_J is up to 90C
- Hot process is used
- V_{DD1} (vdd_mpu_iva) nominal OPP voltage:
  - DM3730 (800M Hz): @1.27V
  - DM3730 (600M Hz): @1.14V

(6) This maximum vdd_mpu_iva current is observed at OPP1G operating point.

(7) Depending on the microprocessor chosen, the IVA feature may or may not be supported. See the Features section for more information on device features.

Copyright © 2010–2011, Texas Instruments Incorporated

3.2 Recommended Operating Conditions

The device is used under the recommended operating conditions described in Table 3-4. The POH information in Table 3-3 is provided solely for your convenience and does not extend or modify the warranty provided under TI's standard terms and conditions for TI semiconductor products.

Table 3-3. Reliability Data

JUNCTION TEMP	TOTAL DEVICE LIFETIME	≥OPP130 MAX TIME	OPP1G MAX TIME
@105C	89K POH	Not available	Not available
@90C	100K POH	45K	25K(1)
@75C	>100K POH	100K POH	75K

(1) If device is only operated at OPP1G, then POH can be extended to 35K POH.

NOTE

Logic functions and parameter values are not assured out of the range specified in the recommended operating conditions.

Table 3-4. Recommended Operating Conditions

PARAMETER	DESCRIPTION		MIN	NOM	MAX	UNIT
vdd_mpu_iva	Supply voltage range for ARM / IVA domain			See(1)		V
	Maximum Noise (peak-peak)			40		mV_{PP}
vdd_core	Supply voltage range for core domain			See(1)		V
	Maximum Noise (peak-peak)			40		mV_{PP}
vdds	Supply voltage for 1.8-V I/O macros		1.71	1.80	1.91	V
	Maximum Noise (peak-peak)	Oscillator IO (Crystal or Square modes)		40		mV_{PP}
		Others		90		
vdds_mem	Supply voltage for memory buffers		1.71	1.80	1.91	V
	Maximum Noise (peak-peak)			90		mV_{PP}
vdds_mmc1	Supply voltage range for mmc1 dual voltage IOs	1.8-V mode	1.71	1.80	1.91	V
		3.0-V mode	2.70	3.00 to 3.30	3.60	
	Noise (peak-peak)	1.8-V mode		90		mV_{PP}
		3.0-V mode		150		
vdds_x	Supply voltage range for x dual voltage IOs	1.8-V mode	1.71	1.80	1.91	V
		3.0-V mode	2.70	3.00	3.60	
	Maximum Noise (peak-peak)	1.8-V mode		90		mV_{PP}
		3.0-V mode		150		
vdda_wkup_bg_bb	Supply voltage range for wake-up LDO		1.71	1.80	1.91	V
	Maximum Noise (peak-peak)			50		mV_{PP}
vdda_dac	Analog supply voltage for Video DAC		1.71	1.80	1.91	V
	Maximum Noise (peak-peak) for a frequency from 0 to 100 kHz (For a frequency > 100 kHz, decreases 20 dB/dec)			30		mV_{PP}
vdds_sram	Supply voltage for SRAM LDOs		1.71	1.80	1.91	V
	Maximum Noise (peak-peak)			50		mV_{PP}
vdda_dplls_dll	Supply voltage for MPU, IVA, core DPLLs and DLL		1.71	1.80	1.91	V
	Maximum Noise (peak-peak) For any frequency			30		mV_{PP}

Table 3-4. Recommended Operating Conditions (continued)

PARAMETER	DESCRIPTION		MIN	NOM	MAX	UNIT
vdda_dpll_per	Supply voltage for DPLLs (peripherals)		1.71	1.80	1.91	V
	Maximum Noise (peak-peak) For any frequency			50		mV_{PP}
vssa_dac	Ground for video buffers and DAC			0		V
vss	Main ground			0		V
T_J	Operating junction temperature range	Commercial Temperature	0		90	°C
		Industrial Temperature	-40		90	
		Extended Temperature	-40		105	

(1) See Section 4.3.4, *Processor Clocks*. OPP voltage values may change following the silicon characterization result.

Copyright © 2010–2011, Texas Instruments Incorporated

3.3 DC Electrical Characteristics

Table 3-5 summarizes the dc electrical characteristics.

Note: The interfaces or signals described in Table 3-5 correspond to the interfaces or signals available in multiplexing mode 0. All interfaces or signals multiplexed on the balls / pins described in Table 3-5 have the same DC electrical characteristics.

Table 3-5. DC Electrical Characteristics

PARAMETER			MIN	NOM	MAX	UNIT
SDRC Mode (CBP Balls[19]: C14 / B14 / C15 / B16 / D17 / C17 / B17 / D18 / H9 / H10 / H11 / H12 / A13 / A14 / H16 / H17 / H14 / H13 / H15 / A16 / A17)[4]						
V_{IH}	High-level input voltage		0.7 * vdds_mem			V
V_{IL}	Low-level input voltage				0.3 * vdds_mem	V
V_{HYS} [1]	Hysteresis voltage at an input		0.07			V
V_{OH}	High-level output voltage, driver enabled, pullup or pulldown disabled	I_{OH} = –4 mA	0.8 * vdds_mem		vdds_mem	V
V_{OL}	Low-level output voltage, driver enabled, pullup or pulldown disabled	I_{OL} = 4 mA	0		0.2 * vdds_mem	V
C_{IN}	Input capacitance				1.15	pF
t_{TIN}[2]	Input recommended rise, t_{RIN}, and fall time, t_{FIN} (measured between 20% and 80% at PAD)				10	ns
t_{ROUT}[2]	Output maximum rise time (rise time, t_{ROUT}, evaluated between 20% and 80% at PAD) @ maximum load				1.15	ns
t_{FOUT}[2]	Output maximum fall time (fall time, t_{FOUT}, evaluated between 20% and 80% at PAD) @ maximum load				1.10	ns
C_{OUT}	Load capacitance	DS0 = 0[3]	2		4	pF
		DS0 = 1[3]	4		12	
MMC Interface 1 Mode (CBP Balls[19]: N28 / M27 / N27 / N26 / N25 / P28)						
1.8-V Mode						
V_{IH}	High-level input voltage		0.70 * vdds_mmc1		vdds_mmc1 + 0.3	V
V_{IL}	Low-level input voltage		–0.3		0.30 * vdds_mmc1	V
V_{OH}	High-level output voltage with 100-µA sink current I_{OH}		vdds_mmc1 – 0.2			V
V_{OL}	Low-level output voltage with 100-µA sink current at vdds_mmc1 minimum				0.2	V
V_{HYS} [1]	Hysteresis voltage at an input		0.1			V
t_{TIN} [2]	Input transition time (t_{RIN} or t_{FIN} evaluated between 10% and 90% at PAD)	Normal Mode (SPEEDCTRL = 1)[4]			3	ns
		High-Speed (SPEEDCTRL = 0)[4]			8	
C_{OUT}	Load capacitance		10		30	pF
L_{OUT}	Line inductance (except vdds_mmc1)				16	nH
3.0-V Mode						
V_{IH}	High-level input voltage		0.625 * vdds_mmc1		vdds_mmc1 + 0.3	V
V_{IL}	Low-level input voltage		–0.3		0.25 * vdds_mmc1	V
V_{OH}	High-level output voltage with 100-µA sink current I_{OH}		0.75 * vdds_mmc1			V
V_{OL}	Low-level output voltage with 100-µA source current at vdds_mmc1 minimum				0.125 * vdds_mmc1	V
V_{HYS} [1]	Hysteresis voltage at an input		0.05			V

Copyright © 2010–2011, Texas Instruments Incorporated

Table 3-5. DC Electrical Characteristics (continued)

PARAMETER			MIN	NOM	MAX	UNIT
t_{TIN}[2]	Input transition time (t_{RIN} or t_{FIN} evaluated between 10% and 90% at PAD)	Normal Mode (SPEEDCTRL = 1)[4]			3	ns
		High-Speed (SPEEDCTRL = 0)[4]			8	
C_{OUT}	Load capacitance		10		30	pF
L_{OUT}	Line inductance (except vdds_mmc1)				16	nH
GPIO Mode (CBP Balls[19]: P27 / P26 / R25)						
1.8-V Mode						
V_{IH}	High-level input voltage		0.70 * vdds_x		vdds_x + 0.3	V
V_{IL}	Low-level input voltage		–0.3		0.20 * vdds_x	V
V_{OH}	High-level output voltage with 20-µA sink current I_{OH}		0.8 * vdds_x		vdds_x + 0.3	V
V_{OL}	Low-level output voltage with 1-mA source current at vdds_x minimum		–0.3		0.4	V
V_{HYS} [1]	Hysteresis voltage at an input		0.1			V
t_{TIN} [2]	Input transition time (t_{RIN} or t_{FIN} evaluated between 10% and 90% at PAD)	Normal Mode (SPEEDCTRL = 1)[4]			35	ns
C_{IN}	Input capacitance				2.5	pF
C_{OUT}	Load capacitance				30	pF
L_{OUT}	Line inductance (except vdds_x)				16	nH
3.0-V Mode						
V_{IH}	High-level input voltage		0.70 * vdds_x		vdds_x + 0.3	V
V_{IL}	Low-level input voltage		–0.3		0.20 * vdds_x	V
V_{OH}	High-level output voltage with 20-µA sink current I_{OH}		0.7 * vdds_x		vdds_x + 0.3	V
V_{OL}	Low-level output voltage with 1-mA source current at vdds_sim minimum		–0.3		0.4	V
V_{HYS} [1]	Hysteresis voltage at an input		0.05			V
t_{TIN} [2]	Input transition time (t_{RIN} or t_{FIN} evaluated between 10% and 90% at PAD)	Normal Mode (SPEEDCTRL = 1)[4]			35	ns
C_{IN}	Input capacitance				2.5	pF
C_{OUT}	Load capacitance				30	pF
L_{OUT}	Line inductance (except vdds_x)				16	nH
I^2C Mode (CBP Balls[19]: K21 / J21 / AF15 / AE15 / AF14 / AG14 / AD26 / AE26) [6]						
Standard Mode						
V_{IH}	High-level input voltage		0.7 * vdds		vdds + 0.5	V
V_{IL}	Low-level input voltage		–0.5		0.3 * vdds	V
V_{HYS} [1]	Hysteresis voltage at an input		0.15			V
V_{OL}	Low-level output voltage open-drain at 3-mA sink current		NA[18]		NA[18]	V
I_I	Input current at each I/O pin with an input voltage between 0.1 * vdds to 0.9 * vdds		–10		10	µA
C_I	Capacitance for each I/O pin				10	pF
t_{FOUT}[5]	Output fall time from V_{IHmin} to V_{ILmax} with a bus capacitance C_B from 10 pF to 400 pF				250	ns
t_{ROUT}[5]	Output rise time with a capacitive load from 10 pF to 150 pF with internal pullup		20 + 0.1C_B		250	ns
Fast Mode						
V_{IH}	High-level input voltage		0.7 * vdds		vdds + 0.5	V
V_{IL}	Low-level input voltage		–0.5		0.3 * vdds	V

Copyright © 2010–2011, Texas Instruments Incorporated

Table 3-5. DC Electrical Characteristics (continued)

PARAMETER			MIN	NOM	MAX	UNIT
V_{HYS} [1]	Hysteresis voltage at an input		0.15			V
V_{OL}	Low-level output voltage open-drain at 3-mA sink current		0		0.2 * vdds	V
I_I	Input current at each I/O pin with an input voltage between 0.1 * vdds to 0.9 * vdds		–10		10	µA
C_I	Capacitance for each I/O pin				10	pF
t_{FOUT}[5]	Output fall time from V_{IHmin} to V_{ILmax} with a bus capacitance C_B from 10 pF to 400 pF		20 + 0.1C_B		250	ns
t_{ROUT}[5]	Output rise time with a capacitive load from 10 pF to 150 pF with internal pullup		20 + 0.1C_B		250	ns
High-Speed Mode						
V_{IH}	High-level input voltage		0.7 * vdds		vdds + 0.5	V
V_{IL}	Low-level input voltage		–0.5		0.3 * vdds	V
V_{HYS} [1]	Hysteresis voltage at an input		0.15			V
V_{OL}	Low-level output voltage open-drain at 3-mA sink current		0		0.2 * vdds	V
I_I	Input current at each I/O pin with an input voltage between 0.1 * vdds to 0.9 * vdds		–10		10	µA
C_I	Capacitance for each I/O pin				10	pF
t_{FOUT}[5][6]	Output fall time with a capacitive load from 10 pF to 100 pF at 3-mA sink current		10		40	ns
	Output fall time with a capacitive load of 400 pF at 3-mA sink current		20		80	ns
t_{ROUT}[5]	Output rise time with a capacitive load from 10 pF to 80 pF with internal pullup		10		40	ns
Standard LVCMOS Mode						
V_{IH}	High-level input voltage		0.7 * vdds		vdds	V
V_{IL}	Low-level input voltage		–0.5		0.3 * vdds	V
V_{OH}	High-level output voltage at 4-mA sink current		vdds – 0.45			V
V_{OL}	Low-level output voltage at 4-mA sink current				0.45	V
C_{IN}	Input capacitance				1.15	pF
t_{TIN} [2]	Input transition time (t_{RIN} or t_{FIN} evaluated between 10% and 90% at PAD)				10	ns
t_{TOUT}	Output transition time at 40-pF load (t_{ROUT} or t_{FOUT} evaluated between 10% and 90% at PAD)				10	ns
MIPI D-PHY Interface						
MIPI D-PHY Interface - GPI Mode (CBP Balls[19]: AG19 / AH19 / AG18 / AH18 / K28 / L28 / K27 / AG17 / AH17)						
V_{IH}[7]	High-level input voltage		0.65 * vdds_x[14]		vdds_x + 0.3[14]	V
V_{IL}[8]	Low-level input voltage		–0.3		0.35 * vdds_x[14]	V
V_{HYS} [1]	Hysteresis voltage at an input		0.15			V
C_{IN}	Input capacitance				1.3	pF
t_{TIN} [2]	Input transition time (t_{RIN} or t_{FIN} evaluated between 10% and 90% at PAD)				10	ns
Other Balls						
Common to "Other Balls"						
V_{IH}	High-level input voltage		0.65 * vdds		vdds + 0.3	V
V_{IL}	Low-level input voltage		–0.3		0.35 * vdds	V
V_{HYS} [1]	Hysteresis voltage at an input		0.15			V
V_{OH}	High-level output voltage, driver enabled, pullup or pulldown disabled	I_{OH} = – X[17] mA	vdds – 0.45			V
V_{OL}	Low-level output voltage, driver enabled, pullup or pulldown disabled	I_{OL} = X[17] mA			0.45	V
Differences Between "Other Balls"						

Table 3-5. DC Electrical Characteristics (continued)

PARAMETER			MIN	NOM	MAX	UNIT
Input Capacitance and Input Transition Time						
sys_xtalin pin (CBP Ball[19]: AE17)						
C_{IN}	Input capacitance		1.00	1.15	1.35	pF
t_{TIN}[2]	Input transition time (rise time, t_{RIN} or fall time, t_{FIN} evaluated between 10% and 90% at PAD)				10	ns
JTAG interface (CBP Balls[19]: AA17 / AA13 / AA12 / AA18 / AA20 / AA19 / AA11 / AA10)						
C_{IN}	Input capacitance				2.20	pF
t_{TIN}[2]	Input transition time (rise time, t_{RIN} or fall time, t_{FIN} evaluated between 10% and 90% at PAD)				10	ns
Otherwise						
C_{IN}	Input capacitance				1.15	pF
t_{TIN}[2]	Input transition time (rise time, t_{RIN} or fall time, t_{FIN} evaluated between 10% and 90% at PAD)				10	ns
Output Capacitance Load and Output Transition Time						
sys_32k, sys_clkreq, sys_off_mode, sys_clkout1, sys_nirq, uart3_cts_rctx, uart3_rts_sd, uart3_rx_irrx, uart3_tx_irtx, hdq_sio (CBP Balls[19]: R27 / AE25 / AF25 / AF22 / AG25 / AF26 / H18 / H19 / H20 / H21 / J25)						
t_{TOUT}	Output transition time (rise time, t_{ROUT} or fall time, t_{FOUT} evaluated between 10% and 90% at PAD)	DS[1:0] = 00[3]	1[15]		15[16]	ns
C_{TOUT}	Output load		4		60	pF
t_{TOUT}	Output transition time (rise time, t_{ROUT} or fall time, t_{FOUT} evaluated between 10% and 90% at PAD)	DS[1:0] = 10[3]	0.4[15]		5[16]	ns
C_{TOUT}	Output load		2		21	pF
t_{TOUT}	Output transition time (rise time, t_{ROUT} or fall time, t_{FOUT} evaluated between 10% and 90% at PAD)	DS[1:0] = 01[3]	0.6[15]		7[16]	ns
C_{TOUT}	Output load		7		33	pF
CAM, HSUSB0, MMC2, UART1, UART2, McBSP, McSPI, ETK Interfaces, sys_clkout2 (CBP Ball[19]: AE22)						
t_{TOUT}	Output transition time (rise time, t_{ROUT} or fall time, t_{FOUT} evaluated between 10% and 90% at PAD)		1.5		5	ns
C_{TOUT}	Output load		2		22	pF
Otherwise						
t_{TOUT}	Output transition time (rise time, t_{ROUT} or fall time, t_{FOUT} evaluated between 10% and 90% at PAD)		0.6		2.4[17]	ns
C_{TOUT}	Output load		2		22	pF
Hysteresis						
sys_xtalin pin (CBP Ball[19]: AE17)						
V_{HYS}[1]	Hysteresis voltage at an input		0.25			V
hsusb0_clk (CBP Ball[19]: T28)						
V_{HYS}[1]	Hysteresis voltage at an input		0.07			V
Otherwise						
V_{HYS}[1]	Hysteresis voltage at an input		0.15			V

(1) V_{hys} is the magnitude of the difference between the positive-going threshold voltage V_{T+} and the negative-going threshold voltage V_{T-}. Some receivers, but not all, are designed for hysteresis. V_{hys} applies only to those that are.

(2) The t_{IN} (t_{RIN} and t_{FIN} also) value is the recommended condition. The t_{IN} (t_{RIN} and t_{FIN} also) mismatch causes additional delay time inside the device then leads to ac timing invalidation in this DM.

The t_{IN} (t_{RIN} and t_{FIN} also) mismatch does not necessarily mean functional failure. This global value may be overridden on a per interface basis if another value is explicitly defined for that interface in the Timing Requirements and Switching Characteristics chapter of the data manual.

(3) For a full description of the DS0 load compensation register configuration, see the description of the CONTROL_PROG_IO1 configuration registers in System Control Module / Programming Model / Feature Settings / SDRC I/O Drive Strength Selection section of the *AM/DM37x Multimedia Device Technical Reference Manual* (literature number SPRUGN4).

Copyright © 2010–2011, Texas Instruments Incorporated

(4) For a full description of the SPEEDCTRL speed register configuration, see the description of the CONTROL_PROG_IO1 configuration registers in System Control Module / Programming Model / Feature Settings section of the *AM/DM37x Multimedia Device Technical Reference Manual* (literature number SPRUGN4).

(5) Rise and fall times are specified for (0.3 * vdds) to (0.7 * vdds).

(6) For capacitive load from 100 pF to 400 pF, fall time should be linearly interpolated:
t_{Fmin} = (1 + (Load – 100 pF) / 300 pF) * 10 ns
t_{Fmax} = (1 + (Load – 100 pF) / 300 pF) * 40 ns

(7) V_{IH} is the voltage at which the receiver is required to detect a high state in the input signal.

(8) V_{IL} is the voltage at which the receiver is required to detect a low state in the input signal. V_{IL} is larger than the maximum single-ended line voltage during HS transmission. Therefore, both LP receivers will detect low during HS signaling.

(9) This value includes a ground difference of 50 mV between the transmitter and the receiver, the status common-mode level tolerance and variations below 450 MHz.

(10) Common mode is defined as the average voltage level of DX and DY: $V_{CM} = (V_{(DX)} + V_{(DY)})/2$. Common mode ripple may be due to rise-fall time and transmission line impairments in the PCB.

(11) Value when driving into differential load impedance anywhere in the range 80 to 125 Ω.

(12) ULPM stands for Ultra Low Power Mode.

(13) UI = 1 / (2 * fh), where fh is the fundamental frequency of HS data transmission. For example, for 800 Mbps fh is 400 MHz.

(14) vdda_x can be vdda_csiphy1 or vdda_csiphy2 depending on the interface used.

(15) At minimum load.

(16) At maximum load. Caution: This creates EMI parasitics up to 1.2 ns.

(17) For more information about IOH / IOL values, see one of the tables in the Ball Characteristics section, column “BUFFER DRIVE STRENGTH (mA) ”.

(18) No V_{OL} specifications are applicable in Standard mode.

(19) For associated CBC and CUS balls, please refer to the Section 2.4, *Multiplexing Characteristics* table.

3.4 External Capacitors

To improve module performance, decoupling capacitors are required to suppress the switching noise generated by high frequency and to stabilize the supply voltage. A decoupling capacitor is most effective when it is close to the device, because this minimizes the inductance of the circuit board wiring and interconnects.

3.4.1 Voltage Decoupling Capacitors

Table 3-6 summarizes the Core voltage decoupling characteristics.

3.4.1.1 Core Voltage Decoupling Capacitors

To improve module performance, decoupling capacitors are required to suppress the switching noise generated by high frequency and to stabilize the supply voltage. A decoupling capacitor is most effective when it is close to the device, because this minimizes the inductance of the circuit board wiring and interconnects.

Table 3-6. Core Voltage Decoupling Characteristics

PARAMETER	MIN	TYP	MAX	UNIT
C_{vdd_core} (1)	0.6	1.2	1.8	µF
$C_{vdd_mpu_iva}$ (2)	See (2)			µF

(1) The typical value corresponds to 2 capacitors of 470 nF, plus 3 capacitors of 100 nF. Except for the decoupling capacitance values, the PCB rules of the PCB Design Requirements for VDD_MPU_IVA Power Distribution Network for TI OMAP3630, AM37xx, and DM37xx Microprocessors (SPRABJ7) application note can be used.

(2) For more information regarding the vdd_mpu_iva decoupling capacitance recommendations, see the PCB Design Requirements for VDD_MPU_IVA Power Distribution Network for TI OMAP3630, AM37xx, and DM37xx Microprocessors (SPRABJ7) application note.

3.4.1.2 IO and Analog Voltage Decoupling Capacitors

Table 3-7 summarizes the power supply decoupling capacitor characteristics.

Table 3-7. Power Supply Decoupling Capacitor Characteristics

PARAMETER	MIN	TYP	MAX	UNIT
C_{vdds} (1)(2)	200	400	600	nF
C_{vdds_mem} (1)(3)	350	700	1050	nF
C_{vdds_mmc1} (4)	50	100	150	nF
C_{vdds_x} (4)	50	100	150	nF
$C_{vdda_dplls_dll}$ (4)	50	100	150	nF
$C_{vdda_dpll_per}$ (4)	50	100	150	nF
C_{vdds_sram} (4)	110	220	330	nF
$C_{vdda_wkup_bg_bb}$ (4)	240	470	700	nF
C_{vdda_dac} (4)	50	100	150	nF

(1) In power plan configuration.

(2) The typical value corresponds to 4 capacitors of 100 nF.

(3) The typical value corresponds to 7 capacitors of 100 nF.

(4) In power rail configuration.

Copyright © 2010–2011, Texas Instruments Incorporated

3.4.2 Output Capacitors

The capacitors at the outputs are required to stabilize the internal LDO supply voltages. The capacitors must be placed as close as possible to the balls.

Table 3-8 summarizes the power supply decoupling characteristics.

Table 3-8. Output Capacitor Characteristics

PARAMETER	MIN	TYP	MAX	UNIT
$C_{cap_vdd_sram_mpu_iva}$	0.7	1	1.3	µF
$C_{cap_vdd_sram_core}$	0.7	1	1.3	µF
$C_{cap_vddu_wkup_logic}$	0.7	1	1.3	µF
$C_{cap_vddu_array}$	0.7	1	1.3	µF
$C_{cap_vdd_bb_mpu_iva}$	0.7	1	1.3	µF

Copyright © 2010–2011, Texas Instruments Incorporated

Figure 3-1 illustrates an example of the external capacitors.

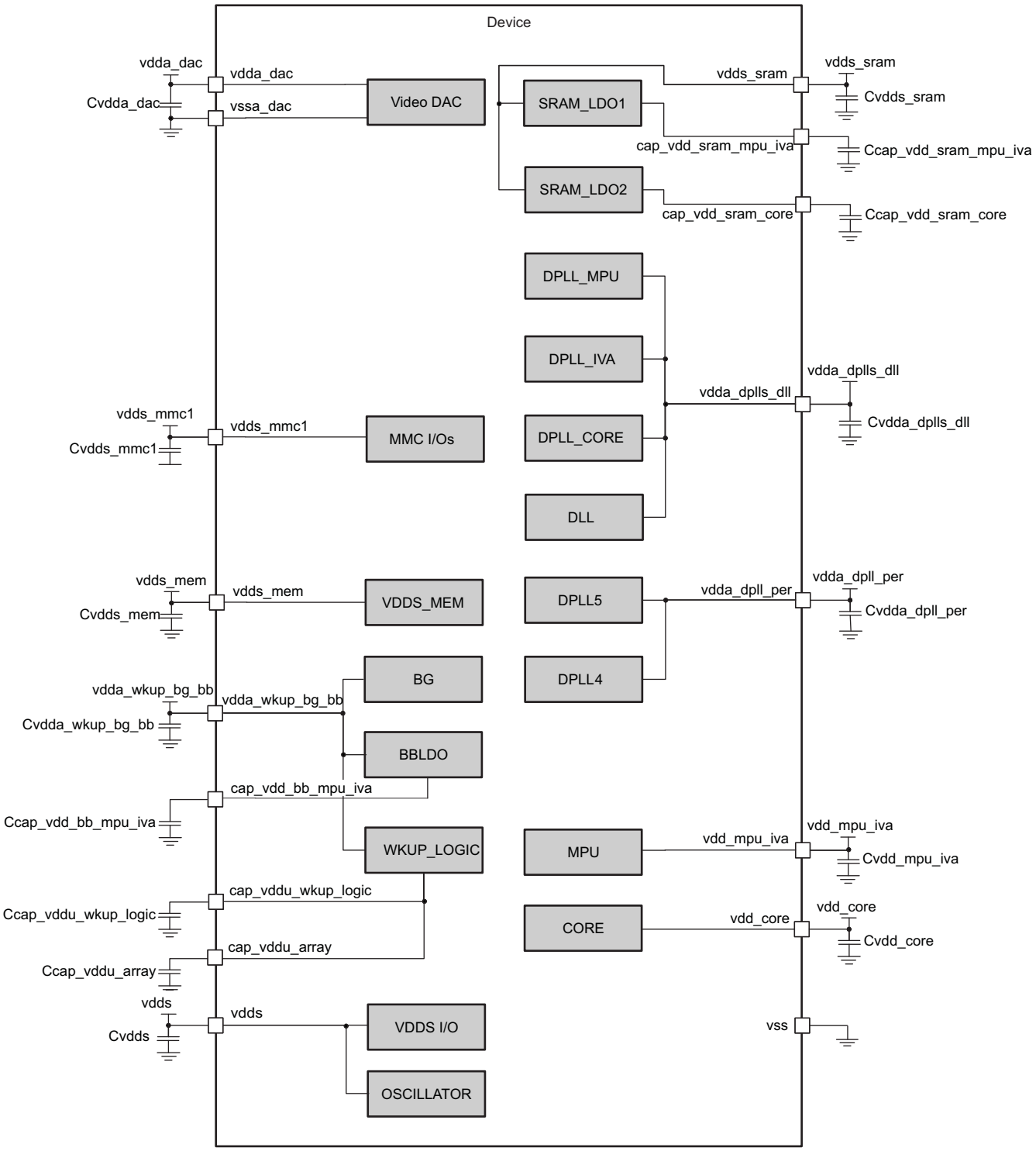

Figure 3-1. External Capacitors

Copyright © 2010–2011, Texas Instruments Incorporated

NOTE

- Decoupling capacitors must be placed as closed as possible of the power ball. Choose the ground located closest to the power pin for each decoupling capacitor. In case of interconnecting powers, first insert the decoupling capacitor and then interconnect the powers.
- The decoupling capacitor value depends on the board characteristics.

3.5 Power-Up and Power-Down Sequences

This section provides the timing requirements for the device hardware signals.

NOTE

- If the MMC dual voltages interfaces are used with 1.8-V or 3.0-V, then the power-up and power-down sequences specified in the Figure 3-2 and Figure 3-3 must be followed carefully to avoid any significant current consumption.
- If the MMC dual voltages interfaces are used with 1.8-V only (3.0-V is never used), then vdds_mmc1, vdds_x may be connected to the main power supply vdds so that they ramp up together before vdd_core.

3.5.1 Power-Up Sequence

NOTE

For more information, see the Power, Reset, and Clock Management / PRCM Functional Description / PRCM Reset Manager Functional Description / Reset Sequences of the *AM/DM37x Multimedia Device Technical Reference Manual* (literature number SPRUGN4).

Figure 3-2 shows the power-up sequence.

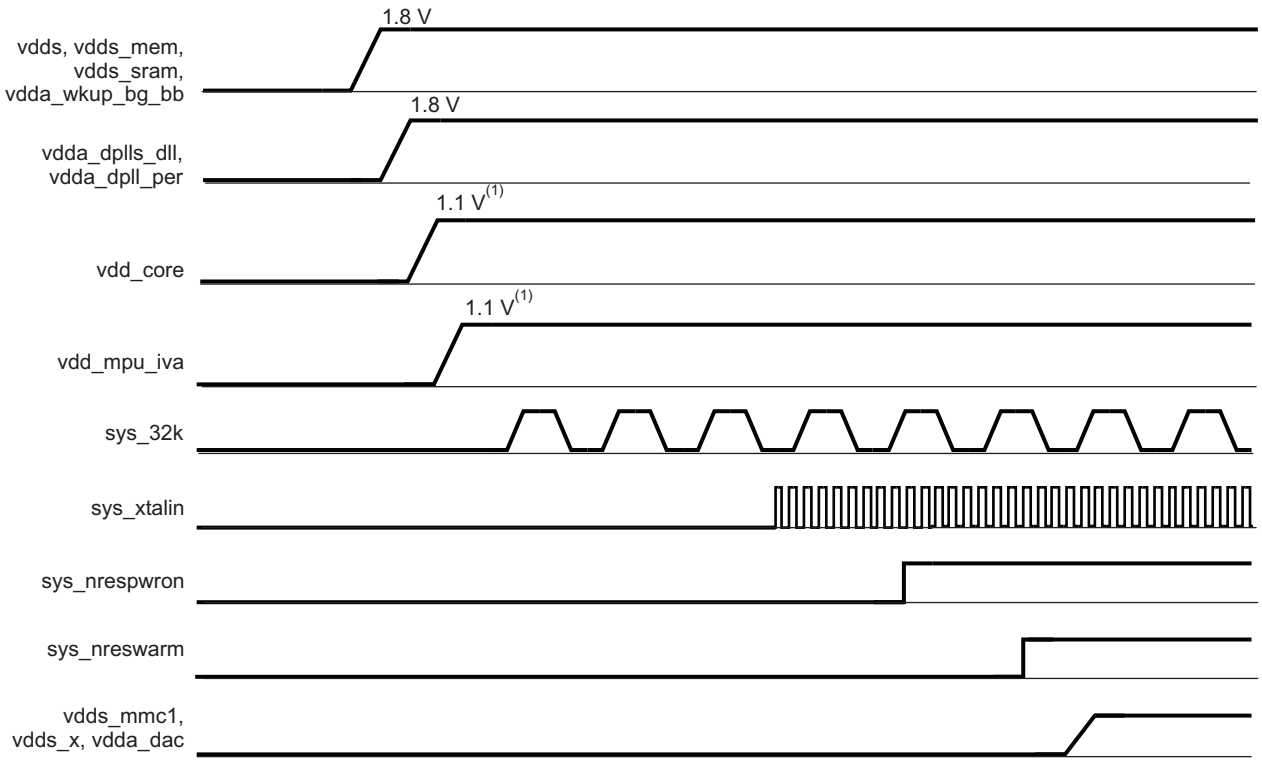

(1) 1.2 V supported.

(2) If an external square clock is provided, it could be started after sys_nrespwron release, provided it is clean, i.e. no glitch, stable frequency and duty cycle.

(3) sys_32k can be turned on any time between the vdds ramp-up and the sys_nrespwron release.

Figure 3-2. Power-Up Sequence

3.5.2 Power-Down Sequence

The following steps give two examples of power-down sequence supported by the DM37x device.

1. Put the DM37x device under reset (sys_nrespwron)
2. Stop all signals driven to its balls (sys_32k, sys_xtalin)
3. Either:
   (a) Shutdown all power domains at once. This sequence is described in black color in Figure 3-3.
   (b) Or, if the shutdown is sequenced, you must follow these steps (described in dash style blue color in Figure 3-3):
   – Turn off all complex IO domains (vdds_mmc1, vdds_x)
   – Turn off all the core and MPU domains (vdd_core, vdd_mpu_iva)
   – Turn off all DPLL domains (vdda_dplls_dll, vdda_dpll_per)
   – Turn off all sram LDOs (vdds_sram)
   – Turn off all reference domains (vdda_wkup_bg_bb)
   – Turn off all standard IO domains (vdds, vdds_mem)

Figure 3-3 shows both power-down sequences: one of them is described in black color, and the other one in dash style blue.

 Copyright © 2010–2011, Texas Instruments Incorporated

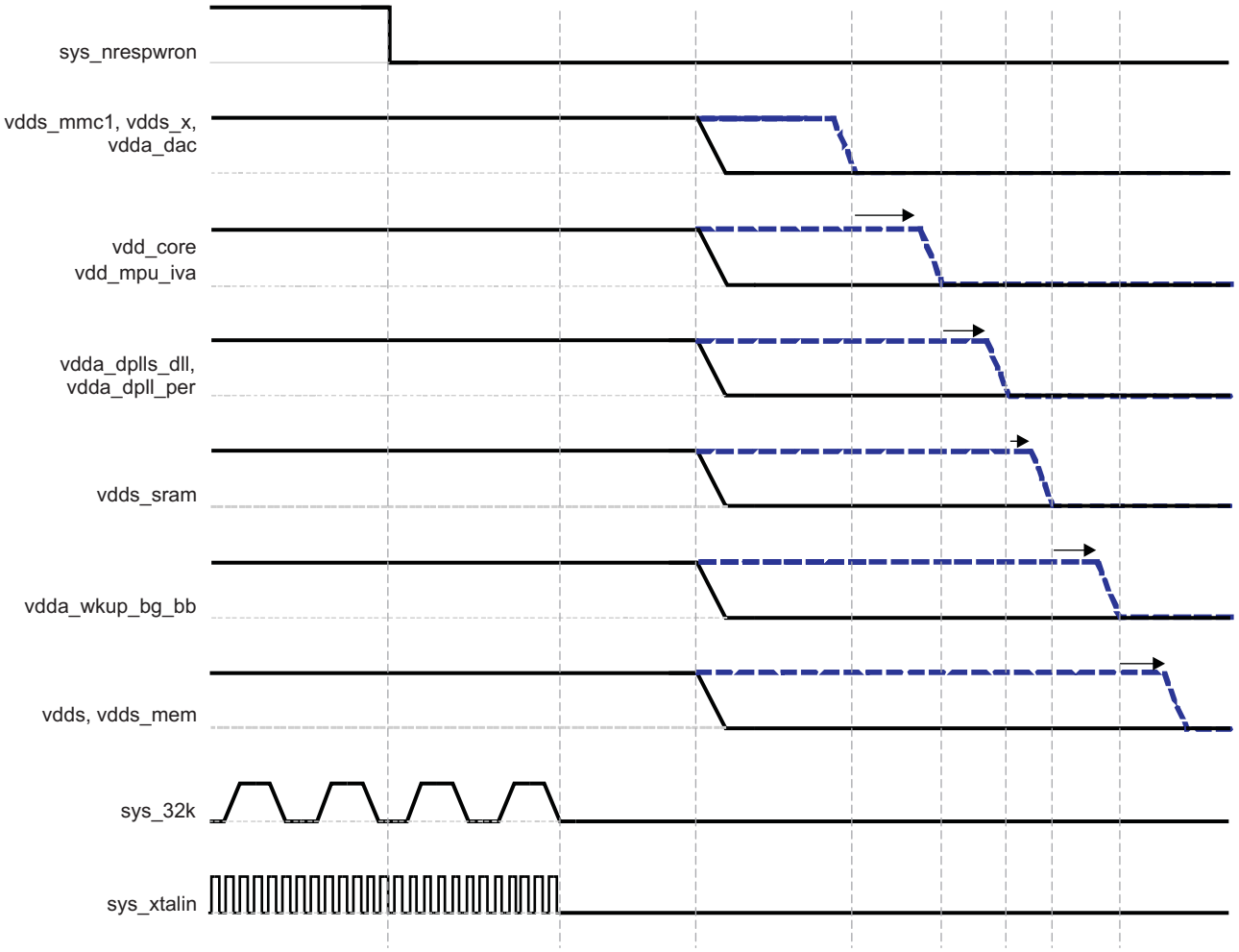

A. sys_32k can be turned off any time between the sys_nrespwron assertion and the vdds shut down.

Figure 3-3. Power-Down Sequence

Alternate power-down sequence:

- vdd_mpu_iva shuts down before vdd_core.
- vdda_sram, vdda_wkup_bg_bb, vdds and vdds_mem shut down simultaneously.
- vdda_dplls_dll and vdda_dpll_per shut down anytime between all complex IO domains shut down and vdda_sram shuts down.

4 Clock Specifications

NOTE

For more information, see the Power, Reset, and Clock Management / PRCM Environment / External Clock Signal and Power, Reset and Clock Management / PRCM Functional Description / PRCM Clock Manager Functional Description sections of the *AM/DM37x Multimedia Device Technical Reference Manual* (SPRUGN4).

Figure 4-1 shows external input clock sources and output clocks.

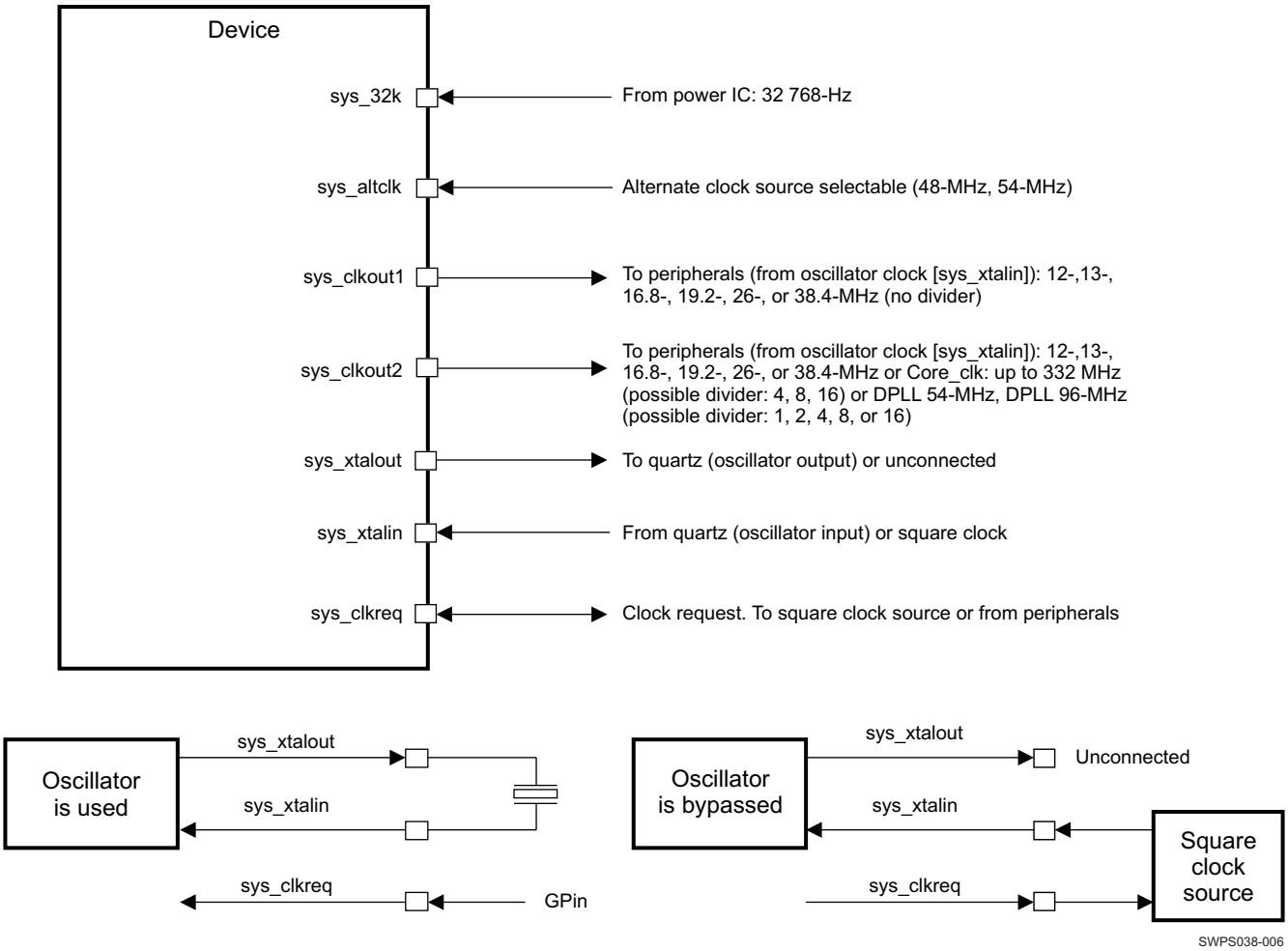

Figure 4-1. Clock Interface

Copyright © 2010–2011, Texas Instruments Incorporated

The device operation requires the following three input clocks:

- The sys_32k 32-kHz clock is used for low frequency operation. It supplies the wake-up domain for operation in lowest power mode (off mode). This clock is provided through the sys_32k pin.
- The sys_altclk system alternative clock can be used (through the sys_altclk pin) to provide alternative 48 MHz or 54 MHz.
- The sys_xtalin / sys_xtalout system input clock (12, 13, 16.8, 19.2, 26, or 38.4 MHz) is used to generate the main source clock of the device. It supplies the DPLLs as well as several other modules. The system input clock can be connected to either:
  - A crystal oscillator clock managed by sys_xtalin and sys_xtalout. In this case, the sys_clkreq is used as an input (GPIN).
  - A CMOS digital clock through the sys_xtalin pin. In this case, the sys_clkreq is used as an output to request the external system clock.

The device outputs externally two clocks:

- sys_clkout1 can output the oscillator clock (12, 13, 16.8, 19.2, 26, or 38.4 MHz) at any time. It can be controlled by software or externally using sys_clkreq control. When the device is in the off state, the sys_clkreq can be asserted to enable the oscillator and activate the sys_clkout1 without waking up the device. The off state polarity of sys_clkout1 is programmable.
- sys_clkout2 can output the oscillator clock (12, 13, 16.8, 19.2, 26, or 38.4 MHz), core_clk (core DPLL output), 96 MHz or 54 MHz. It can be divided by 2, 4, 8, or 16 and its off state polarity is programmable. This output is active only when the core power domain is active.

4.1 Input Clock Specifications

4.1.1 Input Clock Requirements

Table 4-1 illustrates the requirements to supply a clock to the device.

Table 4-1. Input Clock Requirements [(4)]

PAD	CLOCK FREQUENCY		STABILITY	DUTY CYCLE	JITTER	TRANSITION
sys_32k	32.768 kHz		+/- 200 ppm	-	-	<10 ns
sys_xtalout sys_xtalin	12, 13, 16.8, or 19.2 MHz	Crystal	±50 ppm (±5 ppm)[(1)]	-	-	-
	12, 13, 16.8, 19.2, 26, or 38.4 MHz	Square	±50 ppm (±5 ppm)[(1)]	45% to 55%	X%[(2)] * tc(xtalin)[(3)] - 200ps	10 ns
sys_altclk	48 or 54 MHz		+/-50 ppm	49% to 51%	<1%	10 ns

(1) ± 50 ppm is the clock frequency stability/accuracy and ± 5 ppm takes into account the aging effects.

(2) Depending on the internal system clock divider configuration (PRCM.PRM_CLKSRC_CTRL[7:6], SYSCLKDIV bit field), the sys_xtalin input clock can be divided by 2 to provide the standard system clock (SYS_CLK) frequencies.

For more information, see the Power, Reset, and Clock Management chapter of the *AM/DM37x Multimedia Device Technical Reference Manual* (SPRUGN4). In X%, X represents then the internal system clock divider with following possible values: X = 1 or 2.

(3) tc(xtalin) is the sys_xtalin cycle time of the clock coming to sys_xtalin ball.

(4) In this table, the transition times are calculated for 10%-90% of VDDS. For more information on the corresponding VDDS power supply name, please see the Ball Characteristics table corresponding to your package. The POWER column defines the VDDS power supply for each ball.

4.1.2 sys_xtalin / sys_xtalout External Crystal

An external crystal is connected to the device pins. Figure 4-2 describes the crystal implementation.

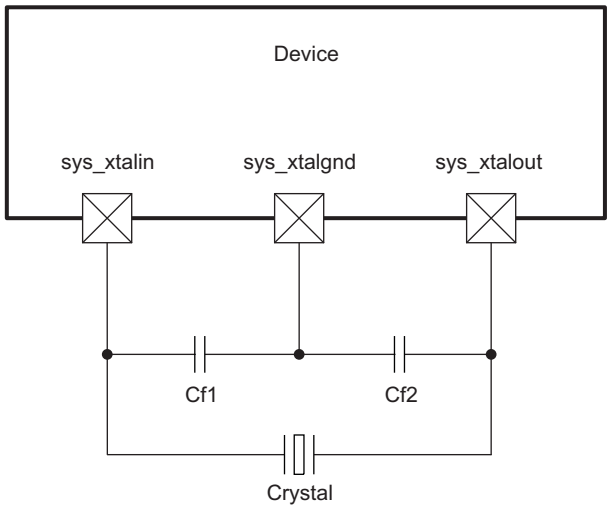

Figure 4-2. Crystal Implementation

1. When the crystal oscillator is in bypass mode (crystal implementation is unused), the sys_xtalgnd ball is not connected.

The crystal must be in the fundamental mode of operation and parallel resonant. Table 4-2 summarizes the required electrical constraints.

Table 4-2. Crystal Electrical Characteristics(1)

NAME	DESCRIPTION	MIN	TYP	MAX	UNIT
f_p	Parallel resonance crystal frequency(1)	12, 13, 16.8, or 19.2			MHz
C_{f1}	C_{f1} load capacitance for crystal parallel resonance with $C_{f1} = C_{f2}$	12		24	pF
C_{f2}	C_{f2} load capacitance for crystal parallel resonance with $C_{f1} = C_{f2}$	12		24	pF
ESR(C_{f1},C_{f2})(2)	Frequency 12 MHz , Negative resistor at nominal 500 Ω, Negative resistor at worst case 300 Ω			100	Ω
	Frequency 13 MHz, Negative resistor at nominal 400 Ω, Negative resistor at worst case 240 Ω			80	Ω
	Frequency 16.8 MHz and 19.2 MHz, Negative resistor at nominal 300 Ω, Negative resistor at worst case 180 Ω			60	Ω
C_o	Crystal shunt capacitance			4.5	pF
DL	Crystal drive level			0.5	mW

(1) Measured with the load capacitance specified by the crystal manufacturer. This load is defined by the foot capacitances tied in series. If C_L = 20 pF, then both foot capacitors will be $C_{f1} = C_{f2}$ = 40 pF. Parasitic capacitance from package and board must also be taken in account.

(2) The crystal motional resistance R_m is related to the equivalent series resistance (ESR) by the following formula: $ESR = R_m * (1 + (C_O * C_{f1} * C_{f2} / (C_{f1} + C_{f2})))^2$.

When selecting a crystal, the system design must take into account the temperature and aging characteristics of a crystal versus the user environment and expected lifetime of the system.

Copyright © 2010–2011, Texas Instruments Incorporated

Table 4-3 details the switching characteristics of the oscillator and the requirements of the input clock.

Table 4-3. Oscillator Switching Characteristics—Crystal Mode

NAME	DESCRIPTION	MIN	TYP	MAX	UNIT
f_p	Oscillation frequency	12, 13, 16.8, or 19.2			MHz
t_{sX}	Start-up time(1) (2)	3			ms

(1) Start-up time is defined as the time the oscillator takes to gain sys_xtalin amplitude enough to have 45% to 55% duty cycle at the core input from the time power down (PWRDN) is released. Start-up time is a strong function of crystal parameters. At power-on reset, the time is adjustable using the pin itself. The reset must be released when the oscillator or clock source is stable. To switch from bypass mode to crystal or from crystal mode to bypass mode, there is a waiting time about 100 µs; however, if the chip comes from bypass mode to crystal mode then the crystal will start-up after time mentioned in the t_{sX} parameter.

(2) Before the processor boots up and the oscillator is set to bypass mode, there is a waiting time when the internal oscillator is in application mode and receives a square wave. The switching time in this case is about 100 µs.

4.1.3 sys_xtalin Squarer Input Clock

Table 4-4 summarizes the base oscillator electrical characteristics.

Table 4-4. Oscillator Electrical Characteristics—Bypass Mode

NAME	DESCRIPTION	MIN	TYP	MAX	UNIT
f	Frequency	12, 13, 16.8, 19.2, 26, or 38.4			MHz
C_i	Input Capacitance	1.00	1.15	1.35	pF
R_i	Input Resistance	160	216	280	Ω
t_{sX}	Start-up time(1)	See(2)			ms

(1) To switch from bypass mode to crystal mode or from crystal mode to bypass mode, there is a waiting time about 100 µs; however, if the chip comes from bypass mode to crystal mode then the crystal will start-up after time mentioned in Table 4-3, t_{sX} parameter above.

(2) Before the processor boots up and the oscillator is set to bypass mode, there is a waiting time when the internal oscillator is in application mode and receives a square wave. The switching time in this case is about 100 µs.

Copyright © 2010–2011, Texas Instruments Incorporated

Table 4-5 details the squarer input clock timing requirements.

Table 4-5. sys_xtalin Squarer Input Clock Timing Requirements—Bypass Mode [5]

NAME	DESCRIPTION		MIN	TYP	MAX	UNIT
OCS0	1 / $t_{c(xtalin)}$	Frequency, sys_xtalin	12, 13, 16.8, 19.2, 26, or 38.4			MHz
OCS1	$t_{w(xtalin)}$	Pulse duration, sys_xtalin low or high	0.45 * $t_{c(xtalin)}$		0.55 * $t_{c(xtalin)}$	ns
	$t_{J(xtalin)}$	Peak-to-peak jitter[1], sys_xtalin			X%[2] * tc(xtalin) [3] - 200	ps
	$t_{R(xtalin)}$	Rise time, sys_xtalin			10	ns
	$t_{F(xtalin)}$	Fall time, sys_xtalin			10	ns
	$t_{J(xtalin)}$	Frequency stability, sys_xtalin			+/-50 (+/-5ppm)[4]	ppm

(1)
- Peak-to-peak jitter is meant here as follows:
  - The maximum value is the difference between the longest measured clock period and the expected clock period
  - The minimum value is the difference between the shortest measured clock period and the expected clock period Maximum and minimum are obtained on a statistical population of 300 period samples and expressed relative to the expected clock period

(2) Depending on the internal system clock divider configuration (PRCM.PRM_CLKSRC_CTRL[7:6], SYSCLKDIV bit field), the sys_xtalin input clock can be divided by 2 to provide the standard system clock (SYS_CLK) frequencies. For more information, see the Power, Reset, and Clock Management chapter of the *AM/DM37x Multimedia Device Technical Reference Manual* (SPRUGN4). In X%, X represents then the internal system clock divider with following possible values: X = 1 or 2.

(3) tc(xtalin) is the sys_xtalin cycle time of the clock coming to sys_xtalin ball.

(4) ±50 ppm is the clock frequency stability/accuracy and ±5 ppm takes into account the aging effects.

(5) In this table, the transition times are calculated for 10%-90% of VDDS. For more information on the corresponding VDDS power supply name, please see the Ball Characteristics table corresponding to your package. The POWER column defines the VDDS power supply for each ball.

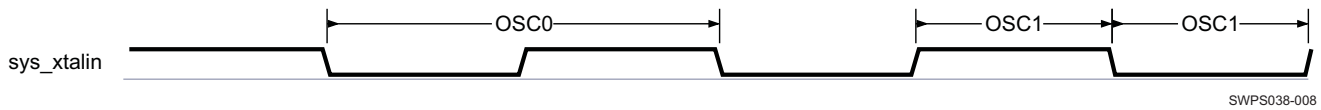

Figure 4-3. sys_xtalin Squarer Input Clock

4.1.4 sys_32k CMOS Input Clock

Table 4-6 summarizes the electrical characteristics of the sys_32k input clock.

Table 4-6. sys_32k Input Clock Electrical Characteristics

NAME	DESCRIPTION	MIN	TYP	MAX	UNIT
f	Frequency, sys_32k		32.768		kHz
C_i	Input capacitance			1.6	pF
R_i	Input resistance	3		10^6	MΩ

Table 4-7 details the input requirements of the sys_32k input clock.

Table 4-7. sys_32k Input Clock Timing Requirements[1]

NAME	DESCRIPTION		MIN	TYP	MAX	UNIT
CK0	1 / $t_{c(32k)}$	Frequency, sys_32k		32.768		kHz
	$t_{R(32k)}$	Rise time, sys_32k			10	ns
	$t_{F(32k)}$	Fall time, sys_32k			10	ns
	$t_{J(32k)}$	Frequency stability, sys_32k			200	ppm

Copyright © 2010–2011, Texas Instruments Incorporated

(1) In this table, the transition times are calculated for 10%-90% of VDDS. For more information on the corresponding VDDS power supply name, please see the Ball Characteristics table corresponding to your package. The POWER column defines the VDDS power supply for each ball.

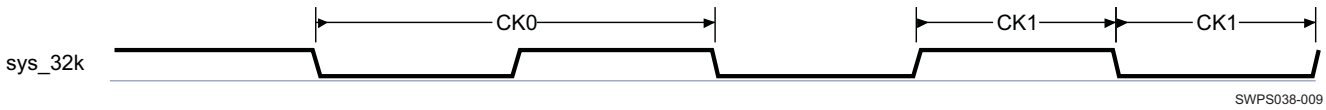

Figure 4-4. sys_32k Input Clock

4.1.5 sys_altclk CMOS Input Clock

Table 4-8 summarizes the electrical characteristics of the sys_altclk input clock.

Table 4-8. sys_altclk Input Clock Electrical Characteristics

NAME	DESCRIPTION	MIN	TYP	MAX	UNIT
f	Frequency, sys_altclk		48 or 54		MHz
Ci	Input capacitance			1.6	pF
Ri	Input resistance	3		10^6	MΩ

Table 4-9 details the input requirements of the sys_altclk input clock.

Table 4-9. sys_altclk Input Clock Timing Requirements(2)

NAME	DESCRIPTION		MIN	TYP	MAX	UNIT
ALT0	$1 / t_{c(altclk)}$	Frequency, sys_altclk		48 or 54		MHz
ALT1	$t_{w(altclk)}$	Pulse duration, sys_altclk low or high	$0.49 * t_{c(altclk)}$		$0.51 * t_{c(altclk)}$	ns
	$t_{J(altclk)}$	Peak-to-peak jitter(1), sys_altclk	-1%		1%	
	$t_{R(altclk)}$	Rise time, sys_altclk			10	ns
	$t_{F(altclk)}$	Fall time, sys_altclk			10	ns
	$t_{J(altclk)}$	Frequency stability, sys_altclk			50	ppm

(1) Peak-to-peak jitter is meant here as follows:
- The maximum value is the difference between the longest measured clock period and the expected clock period
- The minimum value is the difference between the shortest measured clock period and the expected clock period Maximum and minimum are obtained on a statistical population of 300 period samples and expressed relative to the expected clock period

(2) In this table, the transition times are calculated for 10%-90% of VDDS. For more information on the corresponding VDDS power supply name, please see the Ball Characteristics table corresponding to your package. The POWER column defines the VDDS power supply for each ball.

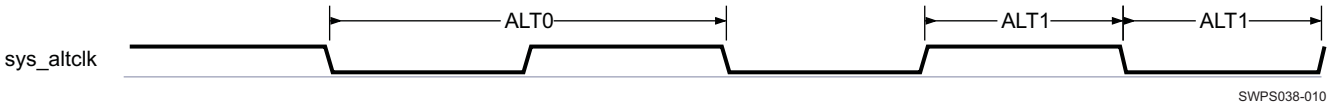

Figure 4-5. sys_altclk Input Clock

4.2 Output Clocks Specifications

4.2.1 sys_clkout1 Output Clock

Table 4-10 summarizes the sys_clkout1 ouput clock electrical characteristics.

Table 4-10. sys_clkout1 Output Clock Electrical Characteristics

NAME	DESCRIPTION	MIN	TYP	MAX	UNIT
f	Frequency, sys_clkout1	sys_xtalin / sys_xtalout clock frequency			MHz
SC[0:1] = 00[(1)]					
C_L	Load capacitance (transmission line load + far end load)	4		60	pF
Z_T	Transmission line impedance	30		70	Ω
L_T	Transmission line length	2		20	cm
SC[0:1] = 01[(1)]					
C_L	Load capacitance (transmission line load + far end load)	7		33	pF
Z_T	Transmission line impedance	30		70	Ω
L_T	Transmission line length	2		8	cm
SC[0:1] = 10[(1)]					
C_L	Load capacitance (transmission line load + far end load)	2		21	pF
Z_T	Transmission line impedance	30		70	Ω
L_T	Transmission line length	1		6	cm

(1) The mode is configured by bits SC0 and SC1 of the IO cell. For more details, see the *AM/DM37x Multimedia Device Technical Reference Manual* (SPRUGN4).

Table 4-11 details the sys_clkout1 ouput clock switching characteristics.

Table 4-11. sys_clkout1 Output Clock Switching Characteristics[(6)]

NAME	DESCRIPTION		MIN	TYP	MAX	UNIT
CO0	1 / $t_{c(CLKOUT1)}$	Frequency, sys_clkout1	sys_xtalin/sys_xtalout clock frequency			MHz
SC[0:1] = 00[(1)]						
	C_L	Load capacitance	4		60	pF
	t_J	Peak-to-peak jitter			X[(5)] + 693	ps
	t_{JC2C}	Cycle-to-cycle jitter			X[(5)] + 705	ps
	$t_{W(CLKOUT1)}$	Pulse duration, sys_clkout1 low or high	$0.45*t_{c(CLKOUT1)}$		$0.55*t_{c(CLKOUT1)}$	
	$t_{R(CLKOUT1)}$	Rise time, sys_clkout1	1[(2) (4)]		15[(3)]	ns
	$t_{F(CLKOUT1)}$	Fall time, sys_clkout1	1[(2) (4)]		15[(3)]	ns
SC[0:1] = 01[(1)]						
	C_L	Load capacitance	7		33	pF
	t_J	Peak-to-peak jitter			X[(5)] + 543	ps
	t_{JC2C}	Cycle-to-cycle jitter			X[(5)] + 555	ps
	$t_{W(CLKOUT1)}$	Pulse duration, sys_clkout1 low or high	$0.45*t_{c(CLKOUT1)}$		$0.55*t_{c(CLKOUT1)}$	
	$t_{R(CLKOUT1)}$	Rise time, sys_clkout1	0.6[(2) (4)]		7[(3)]	ns
	$t_{F(CLKOUT1)}$	Fall time, sys_clkout1	0.6[(2) (4)]		7[(3)]	ns
SC[0:1] = 10[(1)]						
	C_L	Load capacitance	2		21	pF
	t_J	Peak-to-peak jitter			X[(5)] + 603	ps
	t_{JC2C}	Cycle-to-cycle jitter			X[(5)] + 615	ps
	$t_{W(CLKOUT1)}$	Pulse duration, sys_clkout1 low or high	$0.47*t_{c(CLKOUT1)}$		$0.53*t_{c(CLKOUT1)}$	
	$t_{R(CLKOUT1)}$	Rise time, sys_clkout1	0.4[(2) (4)]		5[(3)]	ns

Copyright © 2010–2011, Texas Instruments Incorporated

Table 4-11. sys_clkout1 Output Clock Switching Characteristics[6] (continued)

NAME	DESCRIPTION		MIN	TYP	MAX	UNIT
	$t_{F(CLKOUT1)}$	Fall time, sys_clkout1	0.4[2] [4]		5[3]	ns

(1) The mode is configured by bits SC0 and SC1 of the IO cell. For more details, see the *AM/DM37x Multimedia Device Technical Reference Manual* (SPRUGN4).

(2) At minimum load

(3) At maximum load (Maximum frequency 20 MHz)

(4) Caution: this creates EMI parasitics up to 1.2 ns

(5) X parameter corresponds to the input jitter contribution added at sys_xtalin input pin. For more information regarding the sys_xtalin input jitter requirement, see Section 4.1.1.

(6) In this table, the transition times are calculated for 10%-90% of VDDS. For more information on the corresponding VDDS power supply name, please see the Ball Characteristics table corresponding to your package. The POWER column defines the VDDS power supply for each ball.

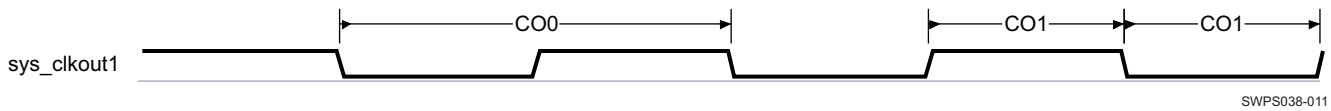

Figure 4-6. sys_clkout1 Output Clock

4.2.2 sys_clkout2 Output Clock

Table 4-12 summarizes the sys_clkout2 ouput clock electrical characteristics.

Table 4-12. sys_clkout2 Output Clock Electrical Characteristics

NAME	DESCRIPTION	MIN	TYP	MAX	UNIT
f	Frequency, sys_clkout2	sys_xtalin clock or core_dpll clock[1] or 54 MHz, 96 MHz[2]			MHz
C_L	Load capacitance	2		22	pF
Z_T	Transmission line impedance	30		70	Ω
L_T	Transmission line length	1		6	cm

(1) Possible divider: 4, 8, or 16.

(2) Possible divider: 1, 2, 4, 8, or 16.

Table 4-13 details the sys_clkout2 ouput clock switching characteristics.

Table 4-13. sys_clkout2 Output Clock Switching Characteristics[8]

NAME	DESCRIPTION		MIN	TYP	MAX	UNIT
CO0	1 / $t_{c(CLKOUT2)}$	Frequency, sys_clkout2	sys_xtalin clock or core_dpll clock[3] or 54 MHz, 96 MHz[4]			MHz
	$t_{c(xtalin)}$	Cycle time, sys_xtalin			1 / sys_xtalin (MHz)	ns
	$t_{c(coredpll)}$	Cycle time, core_dpll (DPLL3) [7]			1 / core_dpll (MHz)	ns
	$t_{c(54mhz)}$	Cycle time, 54MHz clock (DPLL4) [7]			18.52	ns
	$t_{c(96mhz)}$	Cycle time, 96MHz clock (DPLL4) [7]			10.42	ns
CO1	$t_{w(CLKOUT2)}$	Pulse duration, sys_clkout2 low or high	0.49*tc(clkout 2)		0.51*tc(clkout 2)	ns

Table 4-13. sys_clkout2 Output Clock Switching Characteristics[8] (continued)

NAME	DESCRIPTION			MIN	TYP	MAX	UNIT
	t_J[5]	Peak-to-peak jitter	Source clock: sys_xtalin			X%[6] * $t_{c(xtalin)}$ + 200	ps
			Source clock: core_dpll			4% * $t_{c(coredpll)}$ + 200	ps
			Source clock: 54MHz			4% * $t_{c(54mhz)}$ + 200	ps
			Source clock: 96MHz			4% * $t_{c(96mhz)}$ + 200	ps
	$t_{R(CLKOUT2)}$	Rise time, sys_clkout2		1.5[1]		5[2]	ns
	$t_{F(CLKOUT2)}$	Fall time, sys_clkout2		1.5[1]		5[2]	ns

(1) At minimum load

(2) At maximum load (maximum frequency 104 MHz)

(3) Possible divider: 4, 8, 16

(4) Possible divider: 1, 2, 4, 8, or 16

(5) Peak-to-peak jitter is meant here as follows:

- The maximum value is the difference between the longest measured clock period and the expected clock period
- The minimum value is the difference between the shortest measured clock period and the expected clock period

Maximum and minimum are obtained on a statistical population of 300 period samples and expressed relative to the expected clock period.

(6) Depending on the internal system clock divider configuration (PRCM.PRM_CLKSRC_CTRL[7:6], SYSCLKDIV bit field), the sys_xtalin input clock can be divided by 2 to provide the standard system clock (SYS_CLK) frequencies. For more information, see the Power, Reset, and Clock Management / PRCM Functional Description / PRCM Clock Manager Functional Description / External Clock I/Os / External Clock Inputs / High-Frequency System Clock section of *AM/DM37x Multimedia Device Technical Reference Manual* (literature number SPRUGN4).

In X%, X represents then the internal system clock divider with following possible values: X = 1 or 2.

(7) This cycle time specified here is the clock period of the clock going out of sys_clkout2.

(8) In this table, the transition times are calculated for 10%-90% of VDDS. For more information on the corresponding VDDS power supply name, please see the Ball Characteristics table corresponding to your package. The POWER column defines the VDDS power supply for each ball.

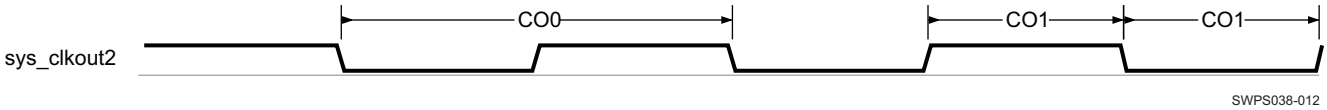

Figure 4-7. sys_clkout2 Output Clock

4.3 DPLL and DLL Specifications

NOTE

For more information, see Power, Reset, and Clock Management / PRCM Functional Description / PRCM Clock Manager Functional Description / Internal Clock Generation / DPLLs section of the *AM/DM37x Multimedia Device Technical Reference Manual* (SPRUGN4).

The applicative subsystem integrates six DPLLs and a DLL. The PRM and CM drive those listed below.

The main DPLLs are:

- DPLL1 (MPU)
- DPLL2 (IVA)
- DPLL3 (Core)
- DPLL4 (Peripherals)
- DPLL5 (Second peripherals DPLL)

Copyright © 2010–2011, Texas Instruments Incorporated

4.3.1 DPLL Characteristics

Table 4-14 summarizes the DPLL characteristics and assumes testing over recommended operating conditions.

Table 4-14. DPLL1 - DPLL2 - DPLL3 - DPLL5 Characteristics

NAME	DESCRIPTION	MIN	TYP	MAX	UNIT	COMMENTS
vdda_dplls_dll	Supply voltage for DPLLs (MPU, IVA, and Core) and DLL	1.71	1.8	1.91	V	
vdda_dpll_per	Supply voltage for DPLL (Peripherals)	1.71	1.8	1.91	V	
f_{input}	CLKINP Input frequency	0.032		52	MHz	FINP
$f_{internal}$	Internal reference frequency	0.032		52	MHz	REFCLK
$f_{CLKINPHIF}$	CLKINPHIF Input frequency	10		1000	MHz	FINPHIF
$f_{CLKINPULOW}$	CLKINPULOW Input frequency	0.001		800	MHz	
f_{CLKOUT}	CLKOUT output frequency	10(1)		1000(2)	MHz	[M / (N + 1)] * FINP * [1 / M2]
$f_{CLKOUTx2}$	CLKOUTx2 output frequency	20(1)		2000(2)	MHz	2 * [M / (N + 1)] * FINP * [1 / M2]
$f_{CLKOUTHIF}$	CLKOUTHIF output frequency	10(3)		1000(4)	MHz	FINPHIF / M3
		20(3)		2000(4)		2 * [M / (N + 1)] * FINP * [1 / M3]
$f_{DCOCLKLDO}$	DCOCLKLDO output frequency	20		2000	MHz	2 * [M / (N + 1)] * FINP
t_{lock}	Frequency lock time			1.9 + 350*REFCLK	µs	
p_{lock}	Phase lock time			1.9 + 500*REFCLK	µs	
$t_{relock-L}$	Relock time—Frequency lock(5) (Low power bypass)			1.9 + 70*REFCLK	µs	DPLL in low-power mode: lowcurrstdby = 1
$p_{relock-L}$	Relock time—Phase lock(5) (Low power bypass)			1.9 + 120*REFCLK	µs	DPLL in low-power mode: lowcurrstdby = 1
$t_{relock-F}$	Relock time—Frequency lock(5) (Fast relock bypass)			0.05 + 70*REFCLK	µs	DPLL in normal mode: lowcurrstdby = 0
$p_{relock-F}$	Relock time—Phase lock(5) (Fast relock bypass)			0.05 + 120*REFCLK	µs	DPLL in normal mode: lowcurrstdby = 0

(1) The minimum frequencies on CLKOUT and CLKOUTX2 are assuming M2 = 1. For M2 > 1, the minimum frequency on these clocks will further scale down by factor of M2.

(2) The maximum frequencies on CLKOUT and CLKOUTX2 are assuming M2 = 1.

(3) The minimum frequency on CLKOUTHIF is assuming M3 = 1. For M3 > 1, the minimum frequency on this clock will further scale down by factor of M3.

(4) The maximum frequency on CLKOUTHIF is assuming M3 = 1.

(5) Relock time assumes typical operating conditions, 10°C maximum temperature drift.

Table 4-15. DPLL4 Characteristics

NAME	DESCRIPTION	MIN	TYP	MAX	UNIT	COMMENTS
vdda_dpll_per	Supply voltage for DPLL (peripherals)	1.71	1.8	1.91	V	
f_{input}	CLKINP input clock frequency	0.5		60	MHz	FINP
$f_{internal}$	REFCLK internal reference frequency	0.5		2.5	MHz	REFCLK
$f_{CLKINPULOW}$	CLKINPULOW bypass input frequency	0.001		800	MHz	
f_{CLKOUT}	CLKOUT output clock frequency	10(1)		2000(2)	MHz	[M / (N + 1)] * FINP * [1 / M2]
$f_{DCOCLKLDO}$	Internal oscillator (DCO) output clock frequency	500		2000	MHz	[M / (N + 1)] * FINP
t_{lock}	Frequency lock time			350*REFCLK	µs	
p_{lock}	Phase lock time			500*REFCLK	µs	
$t_{relock-L}$	Relock time—Frequency lock(3) (Low power bypass)			7.5 + 30*REFCLKs	µs	DPLL in low-power mode: lowcurrstdby = 1

Copyright © 2010–2011, Texas Instruments Incorporated

Table 4-15. DPLL4 Characteristics (continued)

NAME	DESCRIPTION	MIN	TYP	MAX	UNIT	COMMENTS
$p_{relock-L}$	Relock time—Phase lock[3] (Low power bypass)			7.5 + 125*REFCLKs	µs	DPLL in low-power mode: lowcurrstdby = 1
$t_{relock-F}$	Relock time—Frequency lock[3] (Fast relock bypass)			NA	µs	
$p_{relock-F}$	Relock time—Phase lock[3] (Fast relock bypass)			NA	µs	

(1) The minimum frequency on CLKOUT is assuming M2 = 1. For M2 > 1, the minimum frequency on this clock will further scale down by factor of M2.

(2) The maximum frequency on CLKOUT is assuming M2 = 1.

(3) Relock time assumes typical operating conditions, 10°C maximum temperature drift.

4.3.2 DLL Characteristics

Table 4-16 summarizes the DLL characteristics and assumes testing over recommended operating conditions.

Table 4-16. DLL Characteristics

NAME	DESCRIPTION	MIN	TYP	MAX	UNIT	COMMENTS
vdda_dplls_dll	Supply voltage for DPLLs (MPU, IVA, and Core) and DLL	1.71	1.8	1.91	V	
f_{input}	Input clock frequency [1]	66	120	200	MHz	Either application mode 0 and 1
t_{lock}	Lock time			500	Clocks	
t_{relock}	Relock time (Mode transitions through idle mode)			500	ns	IDLE to MODEMAXDELAY
			250	450	Clocks	IDLE to APPLICATION MODE 1 or 0
			1.88	3.38	µs	IDLE to APPLICATION MODE @133 MHz
			1.50	2.71	µs	IDLE to APPLICATION MODE @166 MHz
			1.25	2.25	µs	IDLE to APPLICATION MODE @200 MHz

(1) Maximum frequency for nominal conditions.

Copyright © 2010–2011, Texas Instruments Incorporated

4.3.3 DPLL and DLL Noise Isolation

The noise filters (decoupling capacitors) are required to suppress the switching noise generated by high frequency and to stabilize the supply voltage.

A noise filter is most effective when it is close to the device, because this minimizes the inductance of the circuit board wiring and interconnects.

Figure 4-8 illustrates an example of a noise filter.

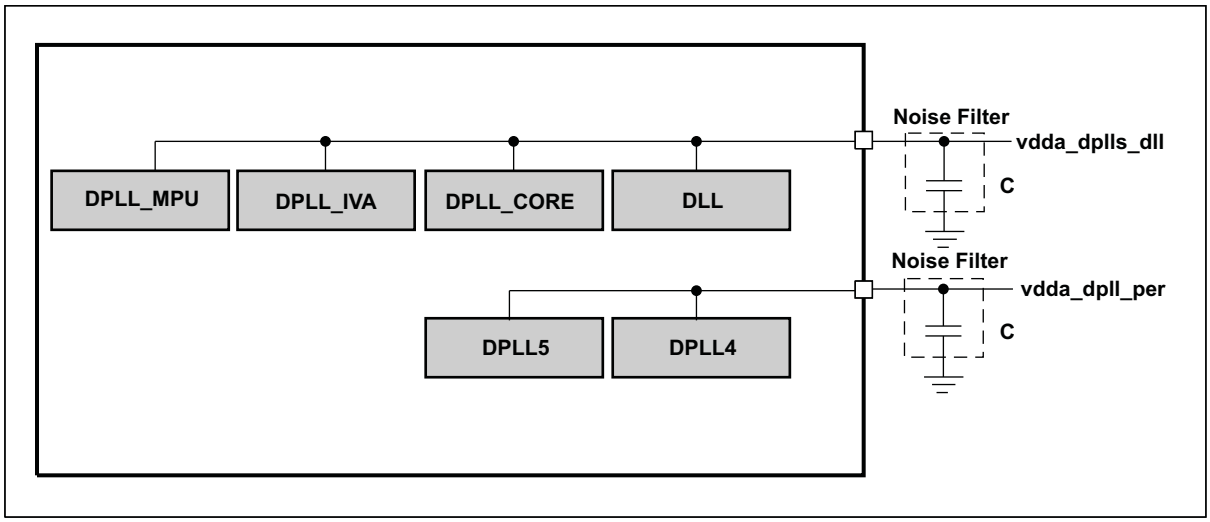

030-017

A. This circuit is provided only as an example.
B. The filter must be located as close as possible to the device.

Figure 4-8. DPLL Noise Filter

Table 4-17 specifies the noise filter requirements.

Table 4-17. DPLL Noise Filter Requirements(1)

NAME	MIN	TYP	MAX	UNIT
Filtering capacitor	50	100	150	nF

(1) For more information, see IO and Analog Voltage Decoupling Capacitors.

4.3.4 Processor Clocks

Table 4-18 through Table 4-20 show the clocks AC performance values.

Table 4-18. Processor Voltages Without SmartReflex™

	RETENTION	OPP50			OPP100			OPP130(3)		
	MIN	MIN	TYP	MAX	MIN	TYP	MAX	MIN	TYP	MAX
VDD1(1) (2) (V)	0.8	0.92	0.97	1.02	1.08	1.14	1.2	1.21	1.27	1.33

(1) At ball level.
(2) Minimum OPP voltage values defined in this table include any voltage transient.
(3) OPP130 is not available above T_J of 90C.

Table 4-19. Processor Voltages With SmartReflex™

	RETENTION	OPP50			OPP100			OPP130(4)			OPP1G (4) (5)(6)		
	MIN	MIN	TYP	MAX	MIN	TYP	MAX	MIN	TYP	MAX	MIN	TYP	MAX

Table 4-19. Processor Voltages With SmartReflex™ (continued)

	RETENTION	OPP50			OPP100			OPP130[4]			OPP1G [4] [5][6]		
VDD1[1] [2] [3] (V)	0.8	0.92	0.97	1.02	1.08	1.14	1.2	1.21	1.27	1.33	1.28	1.33	1.38

(1) At ball level.

(2) These VDD1 (vdd_mpu_iva) values are the required voltage ranges prior to enabling the SmartReflex AVS feature. After calibration, the minimum voltage may be lower than this specification.

(3) Minimum OPP voltage values defined in this table include any voltage transient.

(4) OPP130 and OPP1G are not available above T_J of 90C.

(5) OPP1G is a high performance operating point which has following requirements:

- ABB LDO must be set to FBB (Forward Body Bias) mode when switching to this OPP. It requires having a 1µF capacitor connected to cap_vdd_bb_mpu_iva.
- AVS (Adaptive Voltage Scaling) power technique must be used to achieve optimum operating voltage.

(6) Based on DM3730 PCB constraints, the vdd_mpu_iva (VDD1) voltage value calibrated before enabling SmartReflex™ is recommended to be 1.38V. Minimum (1.28V) and typical (1.33V) values provided can be achieved only with very good power delivery network design. For more information on vdd_mpu_iva power delivery network design requirements, see the PCB Design Requirements for VDD_MPU_IVA Power Distribution Network for TI OMAP3630, AM37xx, and DM37xx Microprocessors (SPRABJ7) application note.

Table 4-20. Processor Clocks

		OPP50		OPP100		OPP130		OPP1G [2]	
Description	Source Clock	Max Freq.(MHz)	Ratio	Max Freq.(MHz)	Ratio	Max Freq.(MHz)	Ratio	Max Freq.(MHz)	Ratio
DPLL1 Locked Frequency	-	1200	-	1200	-	1600	-	2000	-
DPLL1CLKOUT_M2	DPLL1 Locked Frequency	300	2 *(M2 = 2)[1][4]	600	2 *(M2 = 1)[1][4]	800	2 *(M2 = 1)[1][4]	1000	2 *(M2 = 1)[1][4]
DPLL2 Locked Frequency	-	1040	-	1040	-	1320	-	1600	-
DPLL2CLKOUT_M2	DPLL2 Locked Frequency	260	2 *(M2 = 2)[1][4]	520	2 *(M2 = 2)[1][4]	660	2 *(M2 = 2)[1][4]	800	2 *(M2 = 2)[1][4]
ARM_FCLK	DPLL1CLKOUT_M2	300	1	600	1	800	1	1000	1
IVA_CLK	DPLL2CLKOUT_M2	260	1	520	1	660	1	800	1

(1) This ratio is configurable by software programming. For more information, see the *AM/DM37x Multimedia Device Technical Reference Manual* (SPRUGN4).

(2) OPP1G is a high performance operating point which has following requirements:

- ABB LDO must be set to FBB (Forward Body Bias) mode when switching to this OPP. It requires having a 1µF capacitor connected to cap_vdd_bb_mpu_iva.
- AVS (Adaptive Voltage Scaling) power technique must be used to achieve optimum operating voltage.

(3) For more information about ARM_FCLK and IVA2_CLK processor clocks configuration, see the Power, Reset, and Clock Management / PRCM Functional Description / PRCM Clock Manager Functional Description / Clock Configurations / Processor Clock Configurations section or the MPU Subsystem / MPU Subsystem Integration / MPU Subsystem Clock and Reset Distribution / Clock Distribution section of the *AM/DM37x Multimedia Device Technical Reference Manual* (SPRUGN4).

(4) The DPLL ratios documented in this table are recommended ratios. Other values may apply.

Copyright © 2010–2011, Texas Instruments Incorporated

4.3.5 Device Core Clocks

Table 4-21 and Table 4-22 show the device core clocks AC performance values.

Table 4-21. Device Core Voltages

	RETENTION	OPP50			OPP100		
	MIN	MIN	TYP	MAX	MIN	TYP	MAX
VDD2 (1) (2) (3) (V)	0.8	0.90	0.95	1.00	1.08	1.14	1.20

(1) At ball level.

(2) Minimum OPP voltage values defined in this table include any voltage transient.

(3) When SmartReflex™ is not used, these values define the required voltage range. When SmartReflex™ will be used, these voltages are the required voltage range prior to enabling the SmartReflex™ feature. After calibration, the minimum voltage may be lower than this specification.

Table 4-22. Device Core Clocks

		OPP50						OPP100					
Description	Source	Max Freq.(MHz)	Ratio	Max Freq.(MHz)	Ratio	Max Freq.(MHz)	Ratio	Max Freq.(MHz)	Ratio	Max Freq.(MHz)	Ratio	Max Freq.(MHz)	Ratio
DPLL3 Locked Frequency	-	800	-	664	-	400	-	800	-	664	-	532	-
DPLL3CLKOUT_M2	DPLL3 Locked Frequency	200	2 *(M2 = 2)(1)(2)	166	2 *(M2 = 1)(1)(2)	200	2 *(M2 = 1)(1)(2)	400	2 *(M2 = 1)(1)(2)	332	2 *(M2 = 1)(1)(2)	266	2 *(M2 = 1)(1)(2)
CORE_CLK	DPLL3CLKOUT_M2	200	1	166	1	200	1	400	1	332	1	266	1
L3_ICLK	CORE_CLK	100	2(1)	83	2(1)	100	2(1)	200	2(1)	166	2(1)	133	2(1)
L4_ICLK	L3_ICLK	50	2(1)	41.5	2(1)	50	2(1)	100	2(1)	83	2(1)	66.5	2(1)
SDRC_CLK	L3_ICLK	100	1	83	1	100	1	200	1	166	1	133	1
GPMC_CLK	L3_ICLK	50	2(1)	41.5	2(1)	50	2(1)	100	2(1)	83	2(1)	66.5	2(1)

(1) This ratio is configurable by software programming. For more information, see the *AM/DM37x Multimedia Device Technical Reference Manual* (SPRUGN4).

(2) The DPLL ratios documented in this table are recommended ratios. Other values may apply.

4.3.6 Graphic Accelerator (SGX) Clocks

Table 4-23 and Table 4-24 show the recommended V_{DD2} (corresponding to vdd_core, Core and SGX voltage at ball level) voltages ranges and the standard graphic accelerator (SGX) clocks speed characteristics vs V_{DD2}.

Table 4-23. Graphic Accelerator Voltages

	OPP 100 (2)		
	MIN	TYPICAL	MAX
V_{DD2}(1)(3)(4) (V)	1.08	1.14	1.20

(1) At ball level.

(2) SGX (Graphic Accelerator) is not available in the OPP50 operating point.

(3) When SmartReflex™ is not used, these values define the required voltage range. When SmartReflex™ will be used, these voltages are the required voltage range prior to enabling the SmartReflex™ feature. After calibration, the minimum voltage may be lower than this specification.

(4) Minimum OPP voltage values defined in this table include any voltage transient.

Copyright © 2010–2011, Texas Instruments Incorporated

Table 4-24. Graphic Accelerator Clocks[2]

		OPP 100[2]					
Description	**Source Clock**	**Max Freq (MHz)**	**Ratio**	**Max Freq (MHz)**	**Ratio**	**Max Freq (MHz)**	**Ratio**
DPLL3 Locked Frequency		800		664		532	
DPLL4 Locked Frequency		1728		1728		1728	
DPLL3CLKOUTX2_M2	DPLL3 Locked Frequency	800	1 * (M2 = 1)[1][3]	664	1 * (M2 = 1)[1][3]	532	1 * (M2 = 1)[1][3]
DPLL3CLKOUT_M2	DPLL3 Locked Frequency	400	2 * (M2 = 1)[1][3]	332	2 * (M2 = 1)[1][3]	266	2 * (M2 = 1)[1][3]
DPLL4CLKOUT_M2	DPLL4 Locked Frequency	192	1 * (M2 = 9)[1][3]	192	1 * (M2 = 9)[1][3]	192	1 * (M2 = 9)[1][3]
CORE_CLK	DPLL4 Locked Frequency	400	1	332	1	266	1
COREX2_CLK	DPLL3CLKOUTX2_M2	800	1	664	1	532	1
SGX_192M_FCLK	DPLL4CLKOUT_M2	192	1	192	1	192	1
SGX – Option 1	CORE_CLK	200	2	166	2	133	2
SGX – Option 2	COREX2_CLK					177.3	3
SGX – Option 3	SGX_192M_FCLK	192	1	192	1	192	1

(1) This ratio is configurable by software programming. For more information, see the *AM/DM37x Multimedia Device Technical Reference Manual* (SPRUGN4).

(2) SGX (Graphic Accelerator) is not available in OPP50 operating point.

(3) The DPLL ratios documented in this table are recommended ratios. Other values may apply.

Copyright © 2010–2011, Texas Instruments Incorporated

5 Video DAC Specifications

NOTE

For more information regarding the VideoDAC architecture, see the Display Subsystem / Display Subsystem Functional Description / Video Encoder Functionalities / Video DAC Stage—Architecture and Control section of *AM/DM37x Technical Reference Manual* (literature number SPRUGN4).

5.1 TVOUT Buffer Mode (DAC + Buffer)

NOTE

AVDAC normal mode (DAC + Buffer), higher values of the DAC input code provided by the Video Encoder will result in lower output voltage due to the inverting configuration of the TVOUT Buffer. See Figure 5-4 for more details on the relation between the composite video signal levels and the DAC code values for normal mode of operation.

In AVDAC bypass mode (DAC only), higher values of the DAC input code will result in higher output voltage, as the TVOUT Buffer path is bypassed.

The connection for this TVOUT buffer mode (DAC + Buffer) normal mode of operation is shown in Figure 5-1. The default mode of operation is dc coupling. For more information regarding the recommended values of the external components, see Section 5.4, *Electrical Specifications Over Recommended Operating Conditions*.

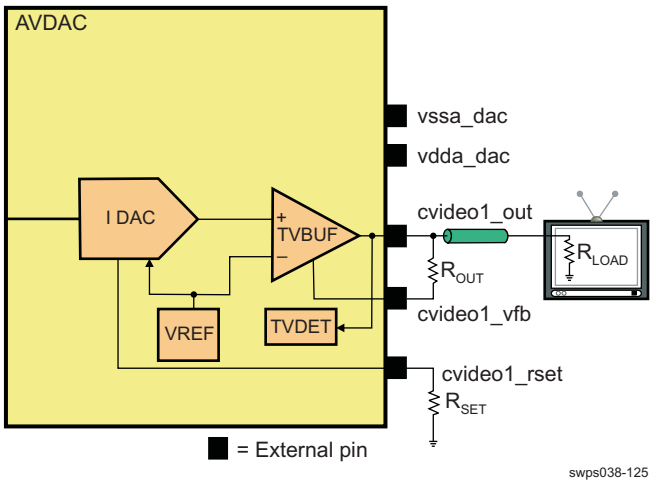

Figure 5-1. Recommended Loading Conditions for TVOUT Buffer Mode(1)

(1) In single-channel configuration only channel-1 is used.

5.2 TVOUT Bypass Mode (DAC Only)

In this case, TVOUT bypass input is high and the TVOUT buffer is bypassed (for more information, see Section 5.5, *TVOUT Bypass Mode Specifications (DAC-Only) Electrical Specifications Over Recommended Operating Conditions*). Figure 5-2 shows the connection. For more information regarding the recommended values of the external components, see Section 5.4, *Electrical Specifications Over Recommended Operating Conditions*.

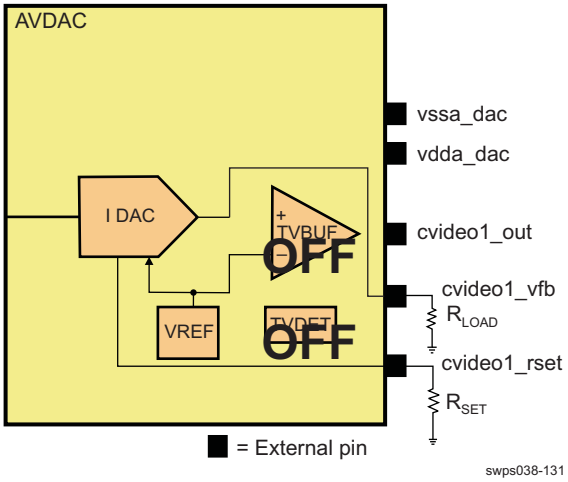

Figure 5-2. Recommended Loading Conditions for TVOUT Bypass Mode(1)

(1) In single-channel configuration only channel-1 is used.

Copyright © 2010–2011, Texas Instruments Incorporated

5.3 TVOUT Bypass Mode in Dual-Channel Configuration

In this case, TVOUT bypass input is high and the TVOUT buffer is bypassed (for more information, see Section 5.5, *TVOUT Bypass Mode Specifications (DAC-Only) Electrical Specifications Over Recommended Operating Conditions*). Figure 5-3 shows the connection. For more information regarding the recommended values of the external components, see Section 5.4, *Electrical Specifications Over Recommended Operating Conditions*.

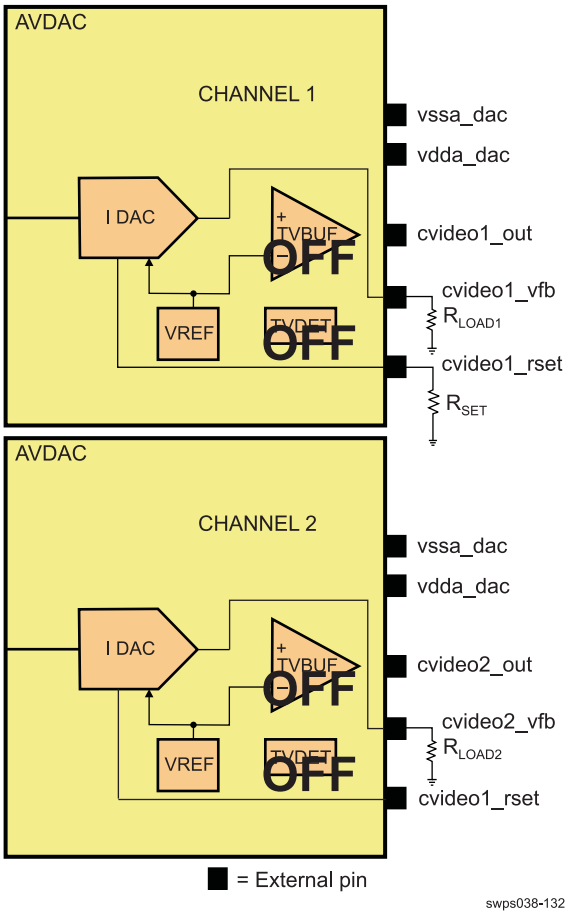

Figure 5-3. Recommended Loading Conditions for TVOUT Bypass Mode in Dual-Channel Configuration(1)

(1) Here are some connections recommendations:
- An external resistor R_{SET} = 10 kΩ (±1%) is recommended to be connected to the cvideo1_rset signal of Channel 1.
- The cvideo1_rset signal of Channel 2 is left unconnected.
- External resistors $R_{LOAD1LOAD2}$ = 1.5 kΩ (±1%) is recommended to be connected to cvideo1_vfb or cvideo2_vfb each channel.

5.4 Electrical Specifications Over Recommended Operating Conditions

NOTE

High-swing mode is the default mode. The low-swing mode is not compliant with the NTSC and PAL video-standards. It shall be used only for backwards compatibility to AM/DM37x.

- TVOUT DC High Swing Mode:
  - $R_{OUT1/2}$ = 2.7 kΩ (±1%)
  - R_{SET} = 4.7 kΩ (±1%)
  - R_{LOAD} = 75 Ω (±5%)
  - Z_{CABLE} = 75 Ω (±5%)
- TVOUT DC Low Swing Mode:
  - $R_{OUT1/2}$ = 2.7 kΩ (±1%)
  - R_{SET} = 6.8 kΩ (±1%)
  - R_{LOAD} = 75 Ω (±5%)
  - Z_{CABLE} = 75 Ω (±5%)
- TVOUT AC High Swing Mode:
  - $R_{OUT1/2}$ = 2.7 kΩ (±1%)
  - R_{SET} = 4.7 kΩ (±1%)
  - R_{LOAD} = 75 Ω (±5%)
  - Z_{CABLE} = 75 Ω (±5%)
  - C_{AC} = 220 µF (±5%)
- TVOUT AC Low Swing Mode:
  - $R_{OUT1/2}$ = 2.7 kΩ (±1%)
  - R_{SET} = 6.8 kΩ (±1%)
  - R_{LOAD} = 75 Ω (±5%)
  - Z_{CABLE} = 75 Ω (±5%)
  - C_{AC} = 220 µF (±5%)

Table 5-1. DAC – Static Electrical Specifications[8]

PARAMETER		CONDITIONS/ASSUMPTIONS		MIN	TYP	MAX	UNIT
R	Resolution				10		Bits
DC ACCURACY							
INL[1]	Integral Non-Linearity (INL)	50 to 111 input code range		–6		6	LSB
	Integral Non-Linearity (INL) Signal video range	111 to 895 input code range		–4		4	
	Integral Non-Linearity (INL) Synchronization pulse	783 to 1007 input code range		–5		5	
DNL[2]	Differential nonlinearity	111 to 895 input code range		–2.5		2.5	LSB
ANALOG OUTPUT							
-	Output voltage	0 to 1023 input code range, R_{LOAD} = 75 Ω	Low-swing mode	0.70	0.88	1.00	V
			High-swing mode	1.2	1.3	1.5	
-	Gain error	-	Low-swing mode	–20		20	% FS
			High-swing mode	–10		10	
R_{VOUT}	Output impedance			67.5	75.0	82.5	Ω
REFERENCE							
V_{REF}	Internal Band Gap Voltage Reference				0.55		V

Copyright © 2010–2011, Texas Instruments Incorporated

Table 5-1. DAC – Static Electrical Specifications[8] (continued)

PARAMETER			CONDITIONS/ASSUMPTIONS		MIN	TYP	MAX	UNIT
POWER CONSUMPTION								
$I_{vdda\text{-}up}$	Analog Supply Current[4]	DC mode No load	Average current on vdda_dac, no load, 2 channels Input code 50 (maximum output voltage)		4.5	6.5	8.5	mA
		AC mode No load			19	28	37	
		Full load 75-Ω load			19	28	37	
$I_{vdda\text{-}up}$ (peak)	Peak analog supply current		Lasts less than 1 ns			60		mA
$I_{vdd\text{-}up}$	Digital supply current[5]		Average current, measured at f_{CLK} = 54 MHz, f_{OUT} = 2 MHz sine wave, vdd = 1.1 V				2	mA
$I_{vdd\text{-}up}$ (peak)	Peak digital supply current[6]		Peak current, full-scale transition lasting less than 1 ns			8		mA
$I_{vdda\text{-}down}$[9]	Analog supply current, total power down[9]		T = 30ºC, vdda_dac = 1.8 V, no load				12	µA
$I_{vdda\text{-}stdby}$[9]	Analog supply current, standby mode[9]		Bandgap and internal LDO are ON, all other analog blocks are OFF, no load, T = 30 Cº		90	180	270	µA
$I_{vdd\text{-}down(pm)}$[9]	Digital supply current, total power down[9]		T = 30ºC, Full or Partial Power Management	Low-swing mode			2	µA
				High-swing mode			6	
$I_{vdd\text{-}down(nopm)}$	Digital supply current, total power down (no power management)		T = 30ºC, VDD = 1.1 V, no Power Management				60	µA

(1) The INL is measured at the output of the DAC (accessible at an external pin during bypass mode). The INL at code 783 equals 0.
(2) The DNL is measured at the output of the DAC (accessible at an external pin during bypass mode). The INL at code 783 equals 0.
(3) Reference PSR measures the effect of a supply disturbance at cvideo1_out and cvideo2_out.
(4) The analog supply current I_{vdda} is directly proportional to the full-scale output current IFS and is insensitive to f_{CLK}.
(5) The digital supply current I_{VDD} is dependent on the digital input waveform, the DAC update rate f_{CLK}, and the digital supply VDD.
(6) The peak digital supply current occurs at full-scale transition for duration less than 1 ns.
(7) See Section 5.6, *Analog Supply (vdda_dac) Noise Requirements*, for actual maximum ripple allowed on vdda_dac.
(8) For more information on code range definition, see Figure 5-4.
(9) For more information on AVDAC power-up, power-down, and standby mode configurations, see Display Subsystem / Display Subsystem Functional Description / Video Encoder Functionalities / Video DAC Stage Power Management section of *AM/DM37x Technical Reference Manual* (literature number SPRUGN4).

NOTE

High-swing mode is the default mode. The low-swing mode is not compliant with the NTSC and PAL video-standards. It is used only for backwards compatibility to AM/DM37x.

Table 5-2. Video DAC – Dynamic Electrical Specifications[6]

PARAMETER	CONDITIONS/ASSUMPTIONS			MIN	TYP	MAX	UNIT
f_{CLK}[1]	Output update rate	Equal to input clock frequency			54	60	MHz
	Clock jitter	RMS clock jitter required in order to assure 10-bit accuracy			40	70	ps
	Attenuation at 5.1 MHz	Corner frequency for signal	DC mode			1.5	dB
			AC mode				
BW	Signal bandwidth	3 dB	DC mode		6		MHz
			AC mode				
	Differential gain[2]	111 to 895 input code range	DC mode	–5%		5%	
			AC mode	–5%		5%	
	Differential phase[2]	111 to 895 input code range	DC mode	–3º		3º	
			AC mode	–3º		3º	
SFDR	Within bandwidth 1 kHz to 6 MHz	f_{CLK} = 54 MHz, f_{OUT} = 1 MHz, sine wane input, 111 to 895 input code range	DC mode	40	50	70	dB
			AC mode				
SNR	Within bandwidth 1 kHz to 6 MHz	f_{CLK} = 54 MHz, f_{OUT} = 1 MHz, sine wane input, 256 to 768 input code range	DC mode	50	54	75	dB
			AC mode				
PSR[4]	Power supply rejection (up to 6 MHz)	100 mVpp at 6 MHz, input code 895			6[4]		dB
Crosstalk	Between the two video channels				–50	–40	dB
C_{Load}	TVOUT (cvideo_out1 and cvideo_out2) stability, TVOUT decoupling capacity	Total decoupling capacity from cvideo_out1 or cvideo_out2 to ground, C_{Load1}				300	pF
C_{TOT}	TVOUT stability, total TVOUT decoupling capacity	Total decoupling capacity: $C_{TOT} = C_{Load1} + C_{Load2}$				600	pF

(1) For internal input clock information, see the DSS chapter of *AM/DM37x Technical Reference Manual* (literature number SPRUGN4).

(2) The differential gain and phase value is for dc coupling. Note that there is degradation for the ac coupling. The Differential Gain and Phase are measured with respect to the gain and phase of the burst signal (–20 to 20 IRE)

(3) The SNR value is for dc coupling.

(4) PSR measures the effect of a supply disturbance at cvideo1_out and cvideo2_out.

(5) The flat band measurement is done at 500 kHz for characterizing the attenuation at 5.1 MHz.

(6) For more information on code range definition, see Figure 5-4.

Copyright © 2010–2011, Texas Instruments Incorporated

Figure 5-4 describes the composite video signal levels.

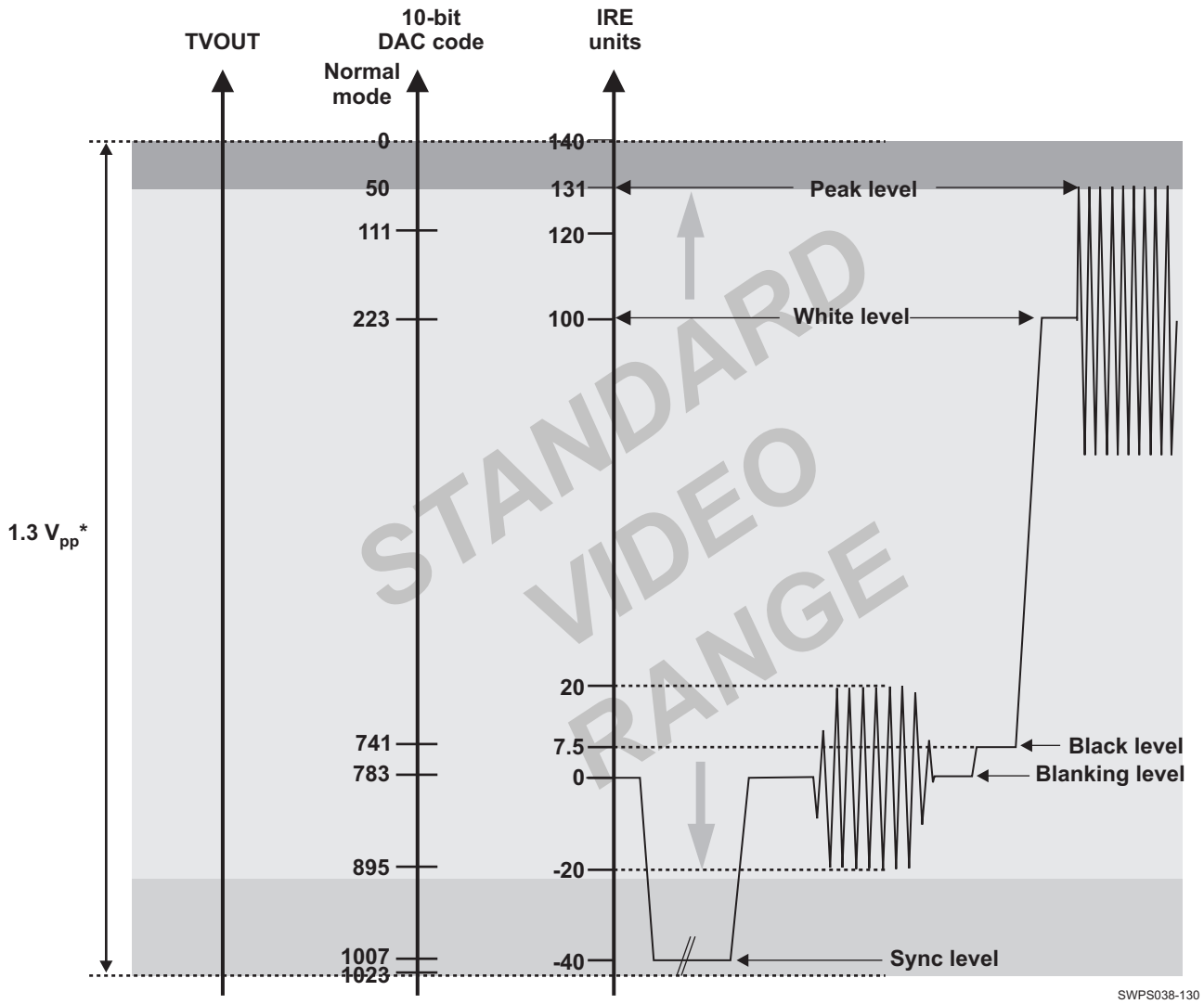

Figure 5-4. Composite Video Signal Levels(1)(2)

(1) The 1.3 V_{PP} (peak-to-peak) is referring to the output signal at cvideo1_out in the DAC + Buffer composite-video mode. Note that the 1.3 V_{PP} must apply to both cvideo1_out and cvideo2_out in DAC + Buffer s-video mode (dual-DAC mode configured for ac or dc coupling).

(2) In AVDAC normal mode (DAC + Buffer), higher values of the DAC input code provided by the Video Encoder will result in lower output voltage due to the inverting configuration of the TVOUT Buffer. See Figure 5-4 for more details on the relation between the composite video signal levels and the DAC code values for normal mode of operation.
In AVDAC bypass mode (DAC only), higher values of the DAC input code will result in higher output voltage, as the TVOUTBuffer path is bypassed.

5.5 TVOUT Bypass Mode Specifications (DAC-Only) Electrical Specifications Over Recommended Operating Conditions

NOTE

The electrical characteristics for single- and dual-channel bypass modes are the same except that the active current will double in the dual-channel configuration.

- Bypass Mode
  - R_{LOAD} = 1.5 kΩ (±1%)
  - R_{SET} = 10 kΩ (±1%)

Table 5-3. DAC—Static Electrical Specifications—Bypass Mode[(2)]

PARAMETER		CONDITIONS/ASSUMPTIONS	MIN	TYP	MAX	UNIT
R	Resolution			10		Bits
DC ACCURACY						
INL[(1)]	Integral nonlinearity (INL)	37 to 954 input code range, R_{LOAD} = 1.5 kΩ	–1		1	LSB
DNL[(1)]	Differential nonlinearity	37 to 954 input code range, R_{LOAD} = 1.5 kΩ	–1		1	LSB
ANALOG OUTPUT						
-	Output voltage	R_{LOAD} = 1.5 kΩ	0.6	0.7	0.77	V
-	Output current	R_{LOAD} = 1.5 kΩ	0.6	0.7	0.77	V
-	Gain error	-	–10		10	% FS
POWER CONSUMPTION						
$I_{vdda\text{-}up}$	Analog supply current	Average current on vdda_dac, R_{LOAD} = 1.5 kΩ Input code 1023	0.7	1.0	1.4	mA
$I_{vdda\text{-}down}$	Analog supply current, total power down	T = 30C°, vdda_dac = 1.8 V, no load			12	µA
$I_{vdda\text{-}stdby}$	Analog supply current, standby mode	Bandgap and internal LDO are ON, all other analog blocks are OFF, no load, T = 30C°	90	180	270	µA

(1) In bypass mode, output node is cvideo1_out and cvideo2_out nodes. For more information, see Section 5.2, *TVOUT Bypass Mode (DAC Only)* or Section 5.3, *TVOUT Bypass Mode in Dual-Channel Configuration*.

(2) For more information on code range definition, see Figure 5-4.

Table 5-4. Video DAC—Dynamic Electrical Specifications—Bypass Mode

PARAMETER		CONDITIONS/ASSUMPTIONS	MIN	TYP	MAX	UNIT
f_{CLK}	Output update rate	Equal to input clock frequency		54	60	MHz
	Clock jitter	RMS clock jitter required in order to assure 10-bit accuracy		40	70	ps
BW	Signal bandwidth	3dB		6		MHz
SFDR	Within bandwidth 1 kHz to 6 MHz	f_{CLK} = 54 MHz, f_{OUT} = 1 MHz, sine wave input, 111 to 895 input code range	40	50	70	dB
SNR	Within bandwidth 1 kHz to 6 MHz	f_{CLK} = 54 MHz, f_{OUT} = 1 MHz, sine wave input, 256 to 768 input code range	50	54	75	dB
PSR	Power supply rejection (up to 6 MHz)	100 mVpp at 6 MHz, input code 895		6[(1)]		dB

(1) For more information on code range definition, see Figure 5-4.

5.6 Analog Supply (vdda_dac) Noise Requirements

In order to assure 10-bit accuracy of the DAC analog output, the analog supply vdda_dac has to meet the noise requirements stated in this section.

The DAC Power Supply Rejection Ratio (PSRR) is defined as the relative variation of the full-scale output current divided by the supply variation. Thus, it is expressed in percentage of Full-Scale Range (FSR) per volt of supply variation as shown in the following equation:

Copyright © 2010–2011, Texas Instruments Incorporated

$$PSRR_{DAC} = \frac{100 \cdot \frac{\Delta I_{OUT}}{I_{OUTFS}}}{V_{AC}} \qquad \left[\% \, FSR/V\right]$$

swps038-e001

Depending on frequency, the PSRR is defined in Table 5-5.

Table 5-5. Video DAC – Power Supply Rejection Ratio

Supply Noise Frequency	PSRR % FSR/V
0 to 100 kHz	1
> 100 kHz	The rejection decreases 20 dB/dec. Example: at 1 MHz the PSRR is 10% of FSR/V.

A graphic representation is shown in Figure 5-5.

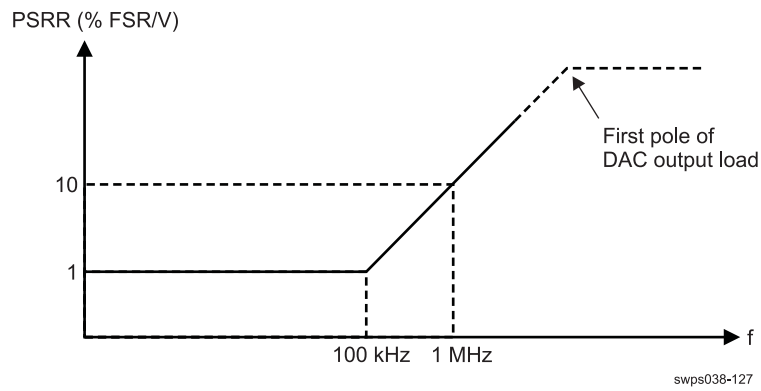

Figure 5-5. Video DAC – Power Supply Rejection Ratio

To ensure that the DAC SFDR specification is met, the PSRR values and the clock jitter requirements translate to the following limits on vdda_dac (for the Video DAC).

The maximum peak-to-peak noise on vdda (ripple) is defined in Table 5-6.

Table 5-6. Video DAC – Maximum Peak-to-Peak Noise on vdda_dac

Tone Frequency	Maximum Peak-to-Peak Noise on vdda_dac
0 to 100 kHz	< 30 mV_{PP}
> 100 kHz	Decreases 20 dB/dec. Example: at 1 MHz the maximum is 3 mV_{PP}

The maximum noise spectral density (white noise) is defined in Table 5-7.

Table 5-7. Video DAC – Maximum Noise Spectral Density

Supply Noise Bandwidth	Maximum Supply Noise Density
0 to 100 kHz	< 20 µV / √Hz
> 100 kHz	Decreases 20 dB/dec. Example: at 1 MHz the maximum noise density is 2 µV / √Hz

Because the DAC PSRR deteriorates at a rate of 20 dB/dec after 100 kHz, it is highly recommended to have vdda_dac low pass filtered (proper decoupling) (see the illustrated application: Section 5.7, *External Component Value Choice*).

 Copyright © 2010–2011, Texas Instruments Incorporated

5.7 External Component Value Choice

The output current I_{DACOUT} appearing at the output of the 10-bit DAC is a function of both the input code DAC_CODE (ranging from 0 to 1023) and I_{DACMAX} and can be expressed as:

$I_{DACOUT} = I_{REF} * (DAC_CODE / 120)$ (1)

The maximum output current I_{DACMAX} from the DAC is given by:

$I_{DACMAX} = I_{REF} * 1023 / 120$ (2)

The reference current, I_{REF}, is set by a combination of internal and external resistors in series, R_{REF}, and an internal reference voltage, V_{REF}, and is given by:

$I_{REF} = V_{REF} / R_{REF}$ (3)

Typically, V_{REF} = 0.55 V and R_{REF} = 9.4 kΩ in TVOUT High-Swing mode.

The video signal voltage at cvideo_out1 and cvideo_out2 nodes can be written as (excluding the offset voltage):

$V_{TVOUT} = 35 * R_{LOAD} * I_{DACMAX} * (1 – DAC_CODE / 1023)$ (4)

Figure 5-6 shows the cvideo_out1 and cvideo_out2 transfer function. Regarding the typical composite video signal levels versus the DAC input code, for more information on code range definition, see Figure 5-4.

Regarding the typical values of the typical values for $R_{out1/2}$ and R_{set} resistors, as well for C_{out} capacitor, for different modes of the TV display interface, see the Display Subsystem / Display Subsystem Environment / TV Display Support section of *AM/DM37x Technical Reference Manual* (literature number SPRUGN4).

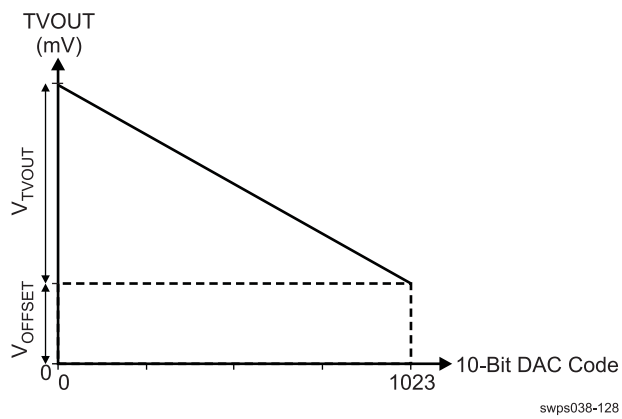

Figure 5-6. cvideo_out1 and cvideo_ou2 Transfer Function

NOTE

The dc levels (Voffset) will be shifted due to process variations.

6 Timing Requirements and Switching Characteristics

6.1 Timing Test Conditions

All timing requirements and switching characteristics are valid over the recommended operating conditions unless otherwise specified.

6.2 Interface Clock Specifications

6.2.1 Interface Clock Terminology

The interface clock is used at the system level to sequence the data and/or to control transfers accordingly with the interface protocol.

6.2.2 Interface Clock Frequency

The two interface clock characteristics are:

- The maximum clock frequency
- The maximum operating frequency

The interface clock frequency documented in this document is the maximum clock frequency, which corresponds to the maximum frequency programmable on this output clock. This frequency defines the maximum limit supported by the device IC and doesn't take into account any system consideration (PCB, Peripherals).

The system designer will have to consider these system considerations and the device IC timing characteristics as well, to define properly the maximum operating frequency, which corresponds to the maximum frequency supported to transfer the data on this interface.

6.2.3 Clock Jitter Specifications

Jitter is a phase noise, which may alter different characteristics of a clock signal. The jitter specified in this document is the time difference between the typical cycle period and the actual cycle period affected by noise sources on the clock. The cycle (or period) jitter terminology will be used to identify this type of jitter.

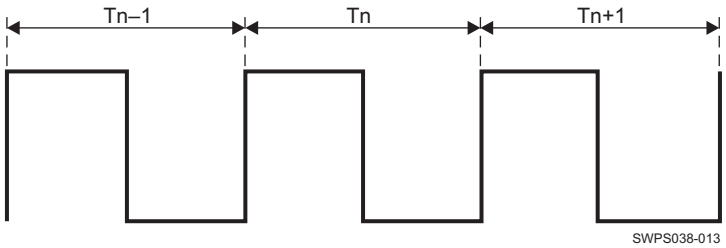

Figure 6-1. Cycle (or Period) Jitter

NOTE

Max. Cycle Jitter = Max (Ti)

Min. Cycle Jitter = Min (Ti)

Jitter Standard Deviation (or RMS Jitter) = Standard Deviation (Ti)

6.2.4 Clock Duty Cycle Error

The maximum duty cycle error is the difference between the absolute value of the maximum high-level pulse duration or the maximum low-level pulse duration and the typical pulse duration value.

- Maximum pulse duration = Typical pulse duration + maximum duty cycle error
- Minimum pulse duration = Typical pulse duration - maximum duty cycle error

 Copyright © 2010–2011, Texas Instruments Incorporated

6.3 Timing Parameters

The timing parameter symbols used in the timing requirements and switching characteristics tables are created in accordance with JEDEC Standard 100. To shorten the symbols, some of pin names and other related terminologies have been abbreviated as follows:

Table 6-1. Timing Parameters

SUBSCRIPTS	
SYMBOL	**PARAMETER**
c	Cycle time (period)
d	Delay time
dis	Disable time
en	Enable time
h	Hold time
su	Setup time
START	Start bit
t	Transition time
v	Valid time
w	Pulse duration (width)
X	Unknown, changing, or don't care level
F	Fall time
H	High
L	Low
R	Rise time
V	Valid
IV	Invalid
AE	Active edge
FE	First edge
LE	Last edge
Z	High impedance

6.4 External Memory Interfaces

The device includes the following external memory interfaces:

- General-purpose memory controller (GPMC)
- SDRAM controller (SDRC)

6.4.1 General-Purpose Memory Controller (GPMC)

NOTE

For more information, see Memory Subsystem / General-Purpose Memory Controller section of the *AM/DM37x Multimedia Device Technical Reference Manual* (literature number SPRUGN4).

The GPMC is the unified memory controller used to interface external memory devices such as:

- Asynchronous SRAM-like memories and ASIC devices
- Asynchronous page mode and synchronous burst NOR flash
- NAND flash

6.4.1.1 GPMC/NOR Flash—Synchronous Mode

Table 6-3 and Table 6-4 assume testing over the recommended operating conditions and electrical characteristic conditions below (see Figure 6-2 through Figure 6-6).

Table 6-2. GPMC/NOR Flash Timing Conditions—Synchronous Mode

TIMING CONDITION PARAMETER		VALUE	UNIT
Input Conditions			
t_R	Input signal rise time	1.8	ns
t_F	Input signal fall time	1.8	ns
Output Conditions			
C_{LOAD}	Output load capacitance(1)	12	pF

(1) The load setting of the IO buffer: LB0 = 1.

Table 6-3. GPMC/NOR Flash Timing Requirements—Synchronous Mode(1)

NO.	PARAMETER		OPP100		OPP50		UNIT
			MIN	MAX	MIN	MAX	
F12	$t_{su(dV-clkH)}$	Setup time, input data gpmc_d[15:0] valid before output clock gpmc_clk high	2.3		2.3		ns
F13	$t_{h(clkH-dV)}$	Hold time, input data gpmc_d[15:0] valid after output clock gpmc_clk high	1.5		1.5		ns
F21	$t_{su(waitV-clkH)}$	Setup time, input wait gpmc_waitx(2) valid before output clock gpmc_clk high	2.3		2.3		ns
F22	$t_{h(clkH-waitV)}$	Hold time, input wait gpmc_waitx(2) valid after output clock gpmc_clk high	1.9		1.9		ns

(1) See Section 4.3.4, *Processor Clocks*.

(2) In gpmc_waitx, x is equal to 0, 1, 2, or 3.

Table 6-4. GPMC/NOR Flash Switching Characteristics—Synchronous Mode(2) (18)

NO.	PARAMETER		OPP100		OPP50		UNIT
			MIN	MAX	MIN	MAX	
F0	$1 / t_{c(clk)}$	Frequency(15), output clock gpmc_clk		100		100	MHz
F1	$t_{w(clkH)}$	Typical pulse duration, output clock gpmc_clk high	0.5P(12)		0.5P(12)		ns
F1	$t_{w(clkL)}$	Typical pulse duration, output clock gpmc_clk low	0.5P(12)		0.5P(12)		ns

Copyright © 2010–2011, Texas Instruments Incorporated

Table 6-4. GPMC/NOR Flash Switching Characteristics—Synchronous Mode[2] [18] (continued)

NO.	PARAMETER			OPP100		OPP50		UNIT
				MIN	MAX	MIN	MAX	
	$t_{dc(clk)}$	Duty cycle error, output clock gpmc_clk		–500	500	–500	500	ps
	$t_{J(clk)}$	Jitter standard deviation[16], output clock gpmc_clk			33.33		33.33	ps
	$t_{R(clk)}$	Rise time, output clock gpmc_clk			1.6		1.6	ns
	$t_{F(clk)}$	Fall time, output clock gpmc_clk			1.6		1.6	ns
	$t_{R(do)}$	Rise time, output data gpmc_d[15:0]			2		2	ns
	$t_{F(do)}$	Fall time, output data gpmc_d[15:0]			2		2	ns
F2	$t_{d(clkH-ncsV)}$	Delay time, output clock gpmc_clk rising edge to output chip select gpmc_ncsx[11] transition		F[6] – 1.9	F[6] + 3.3	F[6] – 1.9	F[6] + 3.3	ns
F3	$t_{d(clkH-ncsIV)}$	Delay time, output clock gpmc_clk rising edge to output chip select gpmc_ncsx[11] invalid		E[5] – 1.9	E[5] + 3.3	E[5] – 1.9	E[5] + 3.3	ns
F4	$t_{d(aV-clk)}$	Delay time, output address gpmc_a[27:1] valid to output clock gpmc_clk first edge		B[2] – 4.1	B[2] + 2.1	B[2] – 4.1	B[2] + 2.1	ns
F5	$t_{d(clkH-aIV)}$	Delay time, output clock gpmc_clk rising edge to output address gpmc_a[27:1] invalid		–2.1		–2.1		ns
F6	$t_{d(nbeV-clk)}$	Delay time, output lower byte enable/command latch enable gpmc_nbe0_cle, output upper byte enable gpmc_nbe1 valid to output clock gpmc_clk first edge		B[2] – 1.2	B[2] + 2.2	B[2] – 1.2	B[2] + 2.2	ns
F7	$t_{d(clkH-nbeIV)}$	Delay time, output clock gpmc_clk rising edge to output lower byte enable/command latch enable gpmc_nbe0_cle, output upper byte enable gpmc_nbe1 invalid		D[4] – 2.2	D[4] + 1.2	D[4] – 2.2	D[4] + 1.2	ns
F8	$t_{d(clkH-nadv)}$	Delay time, output clock gpmc_clk rising edge to output address valid/address latch enable gpmc_nadv_ale transition		G[7] + 0.8	G[7] + 2.2	G[7] + 0.8	G[7] + 2.2	ns
F9	$t_{d(clkH-nadvIV)}$	Delay time, output clock gpmc_clk rising edge to output address valid/address latch enable gpmc_nadv_ale invalid		D[4] – 1.9	D[4] + 4.1	D[4] – 1.9	D[4] + 4.1	ns
F10	$t_{d(clkH-noe)}$	Delay time, output clock gpmc_clk rising edge to output enable gpmc_noe transition		H[8] – 2.1	H[8] + 2.1	H[8] – 2.1	H[8] + 2.1	ns
F11	$t_{d(clkH-noeIV)}$	Delay time, output clock gpmc_clk rising edge to output enable gpmc_noe invalid		E[5] – 2.1	E[5] + 2.1	E[5] – 2.1	E[5] + 2.1	ns
F14	$t_{d(clkH-nwe)}$	Delay time, output clock gpmc_clk rising edge to output write enable gpmc_nwe transition		I[9] – 1.9	I[9] + 4.1	I[9] – 1.9	I[9] + 4.1	ns
F15	$t_{d(clkH-do)}$	Delay time, output clock gpmc_clk rising edge to output data gpmc_d[15:0] transition		J[10] – 1.7	J[10] + 1.2	J[10] – 1.7	J[10] + 1.2	ns
F17	$t_{d(clkH-nbe)}$	Delay time, output clock gpmc_clk rising edge to output lower byte enable/command latch enable gpmc_nbe0_cle transition		J[10] – 2.2	J[10] + 1.2	J[10] – 2.2	J[10] + 1.2	ns
F18	$t_{w(ncsV)}$	Pulse duration, output chip select gpmc_ncsx[11] low	Read	A[1]		A[1]		ns
			Write	A[1]		A[1]		ns
F19	$t_{w(nbeV)}$	Pulse duration, output lower byte enable/command latch enable gpmc_nbe0_cle, output upper byte enable gpmc_nbe1 low	Read	C[3]		C[3]		ns
			Write	C[3]		C[3]		ns
F20	$t_{w(nadvV)}$	Pulse duration, output address valid/address latch enable gpmc_nadv_ale low	Read	K[13]		K[13]		ns
			Write	K[13]		K[13]		ns
F23	$t_{d(clkH-iodir)}$	Delay time, output clock gpmc_clk rising edge to output IO direction control gpmc_io_dir high (IN direction)		H[8] – 2.1	H[8] + 4.1	H[8] – 2.1	H[8] + 4.1	ns
F24	$t_{d(clkH-iodirIV)}$	Delay time, output clock gpmc_clk rising edge to output IO direction control gpmc_io_dir low (OUT direction)		M[17] – 2.1	M[17] + 4.1	M[17] – 2.1	M[17] + 4.1	ns

(1) For single read: A = (CSRdOffTime – CSOnTime) * (TimeParaGranularity + 1) * GPMC_FCLK[14]
For burst read: A = (CSRdOffTime – CSOnTime + (n – 1) * PageBurstAccessTime) * (TimeParaGranularity + 1) * GPMC_FCLK[14]
For burst write: A = (CSWrOffTime – CSOnTime + (n – 1) * PageBurstAccessTime) * (TimeParaGranularity + 1) * GPMC_FCLK[14]
With n being the page burst access number.

(2) B = ClkActivationTime * GPMC_FCLK[14]

(3) For single read: C = RdCycleTime * (TimeParaGranularity + 1) * GPMC_FCLK [14]
For burst read: C = (RdCycleTime + (n – 1) * PageBurstAccessTime) * (TimeParaGranularity + 1) * GPMC_FCLK[14]
For burst write: C = (WrCycleTime + (n – 1) * PageBurstAccessTime) * (TimeParaGranularity + 1) * GPMC_FCLK[14]
With n being the page burst access number.

(4) For single read: D = (RdCycleTime – AccessTime) * (TimeParaGranularity + 1) * GPMC_FCLK[14]
For burst read: D = (RdCycleTime – AccessTime) * (TimeParaGranularity + 1) * GPMC_FCLK[14]
For burst write: D = (WrCycleTime – AccessTime) * (TimeParaGranularity + 1) * GPMC_FCLK[14]

(5) For single read: E = (CSRdOffTime – AccessTime) * (TimeParaGranularity + 1) * GPMC_FCLK[14]
For burst read: E = (CSRdOffTime – AccessTime) * (TimeParaGranularity + 1) * GPMC_FCLK[14]
For burst write: E = (CSWrOffTime – AccessTime) * (TimeParaGranularity + 1) * GPMC_FCLK[14]

(6) For nCS falling edge (CS activated):
- Case GpmcFCLKDivider = 0:
  - F = 0.5 * CSExtraDelay * GPMC_FCLK[14]
- Case GpmcFCLKDivider = 1:
  - F = 0.5 * CSExtraDelay * GPMC_FCLK[14] if (ClkActivationTime and CSOnTime are odd) or (ClkActivationTime and CSOnTime are even)
  - F = (1 + 0.5 * CSExtraDelay) * GPMC_FCLK[14] otherwise
- Case GpmcFCLKDivider = 2:
  - F = 0.5 * CSExtraDelay * GPMC_FCLK[14] if ((CSOnTime – ClkActivationTime) is a multiple of 3)
  - F = (1 + 0.5 * CSExtraDelay) * GPMC_FCLK[14] if ((CSOnTime – ClkActivationTime – 1) is a multiple of 3)
  - F = (2 + 0.5 * CSExtraDelay) * GPMC_FCLK[14] if ((CSOnTime – ClkActivationTime – 2) is a multiple of 3)

(7) For ADV falling edge (ADV activated):
- Case GpmcFCLKDivider = 0:
  - G = 0.5 * ADVExtraDelay * GPMC_FCLK[14]
- Case GpmcFCLKDivider = 1:
  - G = 0.5 * ADVExtraDelay * GPMC_FCLK[14] if (ClkActivationTime and ADVOnTime are odd) or (ClkActivationTime and ADVOnTime are even)
  - G = (1 + 0.5 * ADVExtraDelay) * GPMC_FCLK[14] otherwise
- Case GpmcFCLKDivider = 2:
  - G = 0.5 * ADVExtraDelay * GPMC_FCLK[14] if ((ADVOnTime – ClkActivationTime) is a multiple of 3)
  - G = (1 + 0.5 * ADVExtraDelay) * GPMC_FCLK[14] if ((ADVOnTime – ClkActivationTime – 1) is a multiple of 3)
  - G = (2 + 0.5 * ADVExtraDelay) * GPMC_FCLK[14] if ((ADVOnTime – ClkActivationTime – 2) is a multiple of 3)

For ADV rising edge (ADV deactivated) in Reading mode:
- Case GpmcFCLKDivider = 0:
  - G = 0.5 * ADVExtraDelay * GPMC_FCLK[14]
- Case GpmcFCLKDivider = 1:
  - G = 0.5 * ADVExtraDelay * GPMC_FCLK[14] if (ClkActivationTime and ADVRdOffTime are odd) or (ClkActivationTime and ADVRdOffTime are even)
  - G = (1 + 0.5 * ADVExtraDelay) * GPMC_FCLK[14] otherwise
- Case GpmcFCLKDivider = 2:
  - G = 0.5 * ADVExtraDelay * GPMC_FCLK[14] if ((ADVRdOffTime – ClkActivationTime) is a multiple of 3)
  - G = (1 + 0.5 * ADVExtraDelay) * GPMC_FCLK[14] if ((ADVRdOffTime – ClkActivationTime – 1) is a multiple of 3)
  - G = (2 + 0.5 * ADVExtraDelay) * GPMC_FCLK[14] if ((ADVRdOffTime – ClkActivationTime – 2) is a multiple of 3)

For ADV rising edge (ADV deactivated) in Writing mode:
- Case GpmcFCLKDivider = 0:
  - G = 0.5 * ADVExtraDelay * GPMC_FCLK[14]
- Case GpmcFCLKDivider = 1:
  - G = 0.5 * ADVExtraDelay * GPMC_FCLK[14] if (ClkActivationTime and ADVWrOffTime are odd) or (ClkActivationTime and ADVWrOffTime are even)
  - G = (1 + 0.5 * ADVExtraDelay) * GPMC_FCLK[14] otherwise
- Case GpmcFCLKDivider = 2:
  - G = 0.5 * ADVExtraDelay * GPMC_FCLK[14] if ((ADVWrOffTime – ClkActivationTime) is a multiple of 3)
  - G = (1 + 0.5 * ADVExtraDelay) * GPMC_FCLK[14] if ((ADVWrOffTime – ClkActivationTime – 1) is a multiple of 3)
  - G = (2 + 0.5 * ADVExtraDelay) * GPMC_FCLK[14] if ((ADVWrOffTime – ClkActivationTime – 2) is a multiple of 3)

(8) For OE falling edge (OE activated) / IO DIR rising edge (Data Bus input direction):
- Case GpmcFCLKDivider = 0: o H = 0.5 * OEExtraDelay * GPMC_FCLK[14]
- Case GpmcFCLKDivider = 1:
  - H = 0.5 * OEExtraDelay * GPMC_FCLK[14] if (ClkActivationTime and OEOnTime are odd) or (ClkActivationTime and OEOnTime are even)
  - H = (1 + 0.5 * OEExtraDelay) * GPMC_FCLK[14] otherwise
- Case GpmcFCLKDivider = 2:
  - H = 0.5 * OEExtraDelay * GPMC_FCLK[14] if ((OEOnTime – ClkActivationTime) is a multiple of 3)

Copyright © 2010–2011, Texas Instruments Incorporated

- H = (1 + 0.5 * OEExtraDelay) * GPMC_FCLK[14] if ((OEOnTime – ClkActivationTime – 1) is a multiple of 3)
- H = (2 + 0.5 * OEExtraDelay) * GPMC_FCLK[14] if ((OEOnTime – ClkActivationTime – 2) is a multiple of 3)

For OE rising edge (OE deactivated):
- Case GpmcFCLKDivider = 0:
  - H = 0.5 * OEExtraDelay * GPMC_FCLK[14]
- Case GpmcFCLKDivider = 1:
  - H = 0.5 * OEExtraDelay * GPMC_FCLK[14] if (ClkActivationTime and OEOffTime are odd) or (ClkActivationTime and OEOffTime are even)
  - H = (1 + 0.5 * OEExtraDelay) * GPMC_FCLK[14] otherwise
- Case GpmcFCLKDivider = 2:
  - H = 0.5 * OEExtraDelay * GPMC_FCLK[14] if ((OEOffTime – ClkActivationTime) is a multiple of 3)
  - H = (1 + 0.5 * OEExtraDelay) * GPMC_FCLK[14] if ((OEOffTime – ClkActivationTime – 1) is a multiple of 3)
  - H = (2 + 0.5 * OEExtraDelay) * GPMC_FCLK[14] if ((OEOffTime – ClkActivationTime – 2) is a multiple of 3)

(9) For WE falling edge (WE activated):
- Case GpmcFCLKDivider = 0:
  - I = 0.5 * WEExtraDelay * GPMC_FCLK[14]
- Case GpmcFCLKDivider = 1:
  - I = 0.5 * WEExtraDelay * GPMC_FCLK[14] if (ClkActivationTime and WEOnTime are odd) or (ClkActivationTime and WEOnTime are even)
  - I = (1 + 0.5 * WEExtraDelay) * GPMC_FCLK[14] otherwise
- Case GpmcFCLKDivider = 2:
  - I = 0.5 * WEExtraDelay * GPMC_FCLK[14] if ((WEOnTime – ClkActivationTime) is a multiple of 3)
  - I = (1 + 0.5 * WEExtraDelay) * GPMC_FCLK[14] if ((WEOnTime – ClkActivationTime – 1) is a multiple of 3)
  - I = (2 + 0.5 * WEExtraDelay) * GPMC_FCLK[14] if ((WEOnTime – ClkActivationTime – 2) is a multiple of 3)

For WE rising edge (WE deactivated):
- Case GpmcFCLKDivider = 0:
  - I = 0.5 * WEExtraDelay * GPMC_FCLK [14]
- Case GpmcFCLKDivider = 1:
  - I = 0.5 * WEExtraDelay * GPMC_FCLK[14] if (ClkActivationTime and WEOffTime are odd) or (ClkActivationTime and WEOffTime are even)
  - I = (1 + 0.5 * WEExtraDelay) * GPMC_FCLK[14] otherwise
- Case GpmcFCLKDivider = 2:
  - I = 0.5 * WEExtraDelay * GPMC_FCLK[14] if ((WEOffTime – ClkActivationTime) is a multiple of 3)
  - I = (1 + 0.5 * WEExtraDelay) * GPMC_FCLK[14] if ((WEOffTime – ClkActivationTime – 1) is a multiple of 3)
  - I = (2 + 0.5 * WEExtraDelay) * GPMC_FCLK[14] if ((WEOffTime – ClkActivationTime – 2) is a multiple of 3)

(10) J = GPMC_FCLK[14]

(11) In gpmc_ncsx, x is equal to 0, 1, 2, 3, 4, 5, 6, or 7. In gpmc_waitx, x is equal to 0, 1, 2, or 3.

(12) P = gpmc_clk period in ns

(13) For read: K = (ADVRdOffTime – ADVOnTime) * (TimeParaGranularity + 1) * GPMC_FCLK[14]
For write: K = (ADVWrOffTime – ADVOnTime) * (TimeParaGranularity + 1) * GPMC_FCLK[14]

(14) GPMC_FCLK is general-purpose memory controller internal functional clock period in ns.

(15) Related to the gpmc_clk output clock maximum and minimum frequencies programmable in the GPMC module by setting the GPMC_CONFIG1_CSx configuration register bit field GpmcFCLKDivider.

(16) The jitter probability density can be approximated by a Gaussian function.

(17) M = (RdCycleTime – AccessTime) * (TimeParaGranularity + 1) * GPMC_FCLK[14]
Above M parameter expression is given as one example of GPMC programming. IO DIR signal will go from IN to OUT after both RdCycleTime and BusTurnAround completion. Behavior of IO direction signal does depend on kind of successive Read/Write accesses performed to Memory and multiplexed or nonmultiplexed memory addressing scheme, bus keeping feature enabled or not. IO DIR behaviour is automatically handled by GPMC controller. For a full description of the gpmc_io_dir feature, see the *AM/DM37x Multimedia Device Technical Reference Manual* (literature number SPRUGN4).

(18) See Section 4.3.4, *Processor Clocks*.

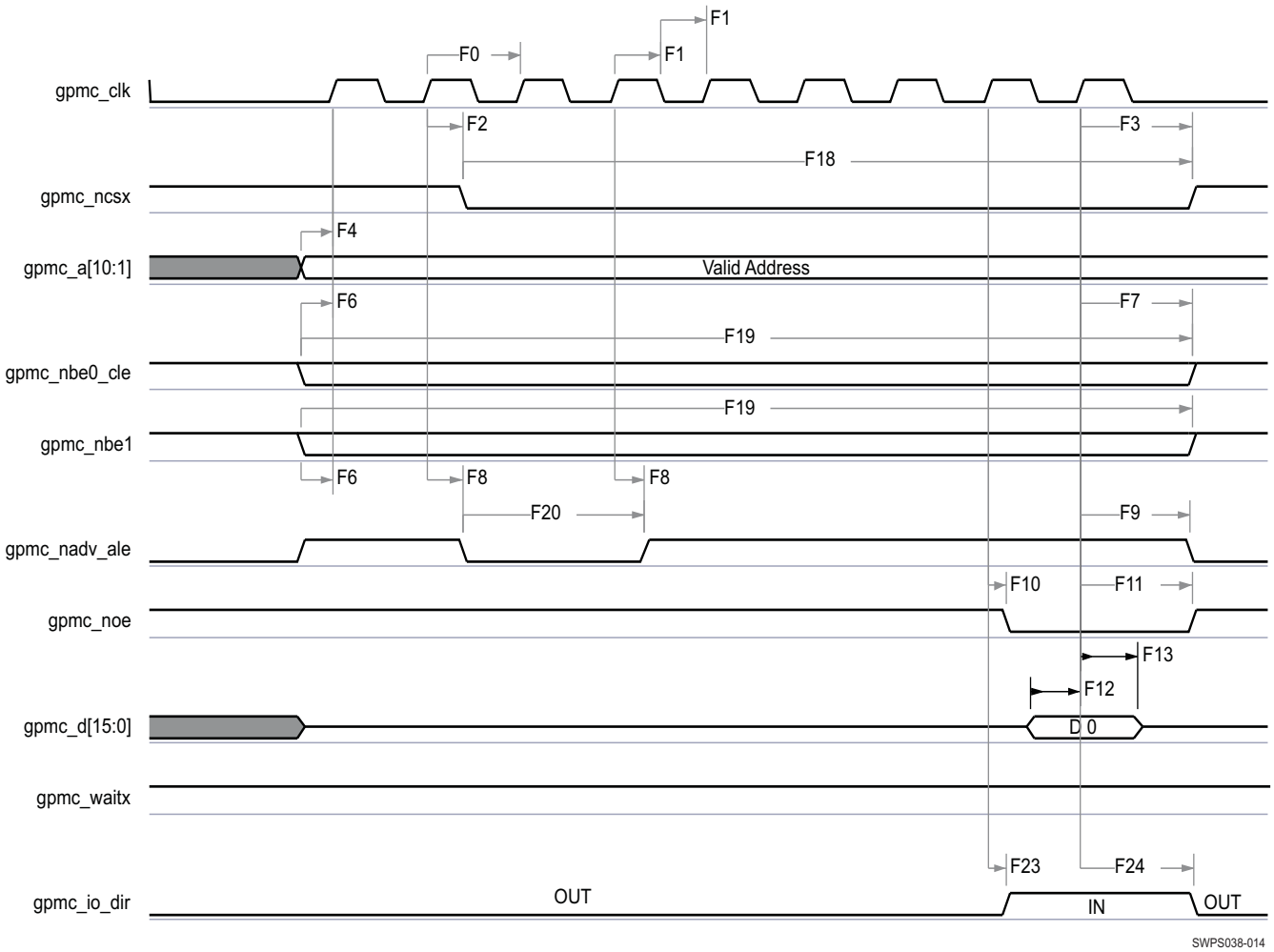

(1) In gpmc_ncsx, x is equal to 0, 1, 2, 3, 4, 5, 6, or 7.
(2) In gpmc_waitx, x is equal to 0, 1, 2, or 3.

Figure 6-2. GPMC/NOR Flash—Synchronous Single Read—(GpmcFCLKDivider = 0)

Copyright © 2010–2011, Texas Instruments Incorporated

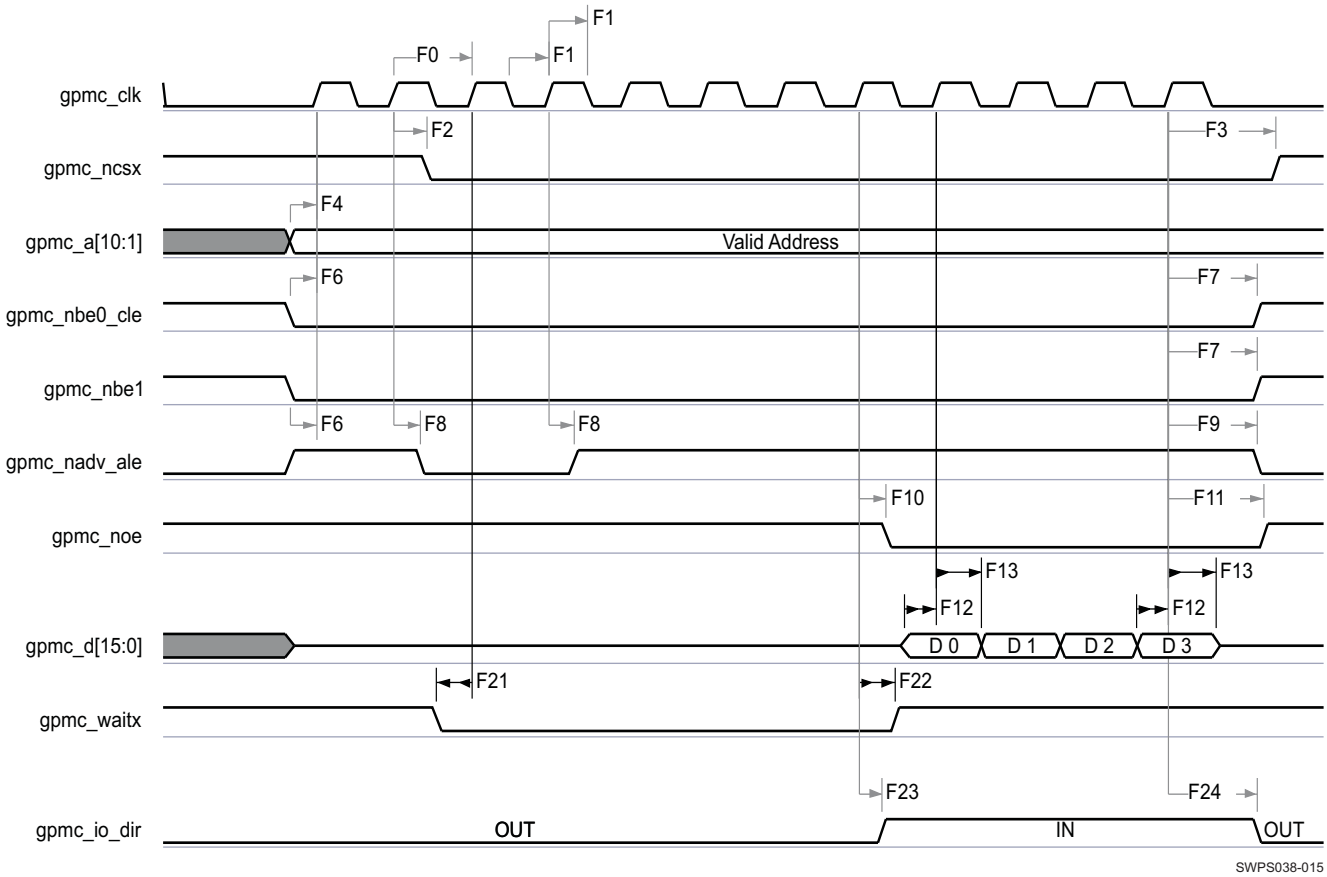

(1) In gpmc_ncsx, x is equal to 0, 1, 2, 3, 4, 5, 6, or 7.
(2) In gpmc_waitx, x is equal to 0, 1, 2, or 3.

Figure 6-3. GPMC/NOR Flash—Synchronous Burst Read—4x16-bit (GpmcFCLKDivider = 0)

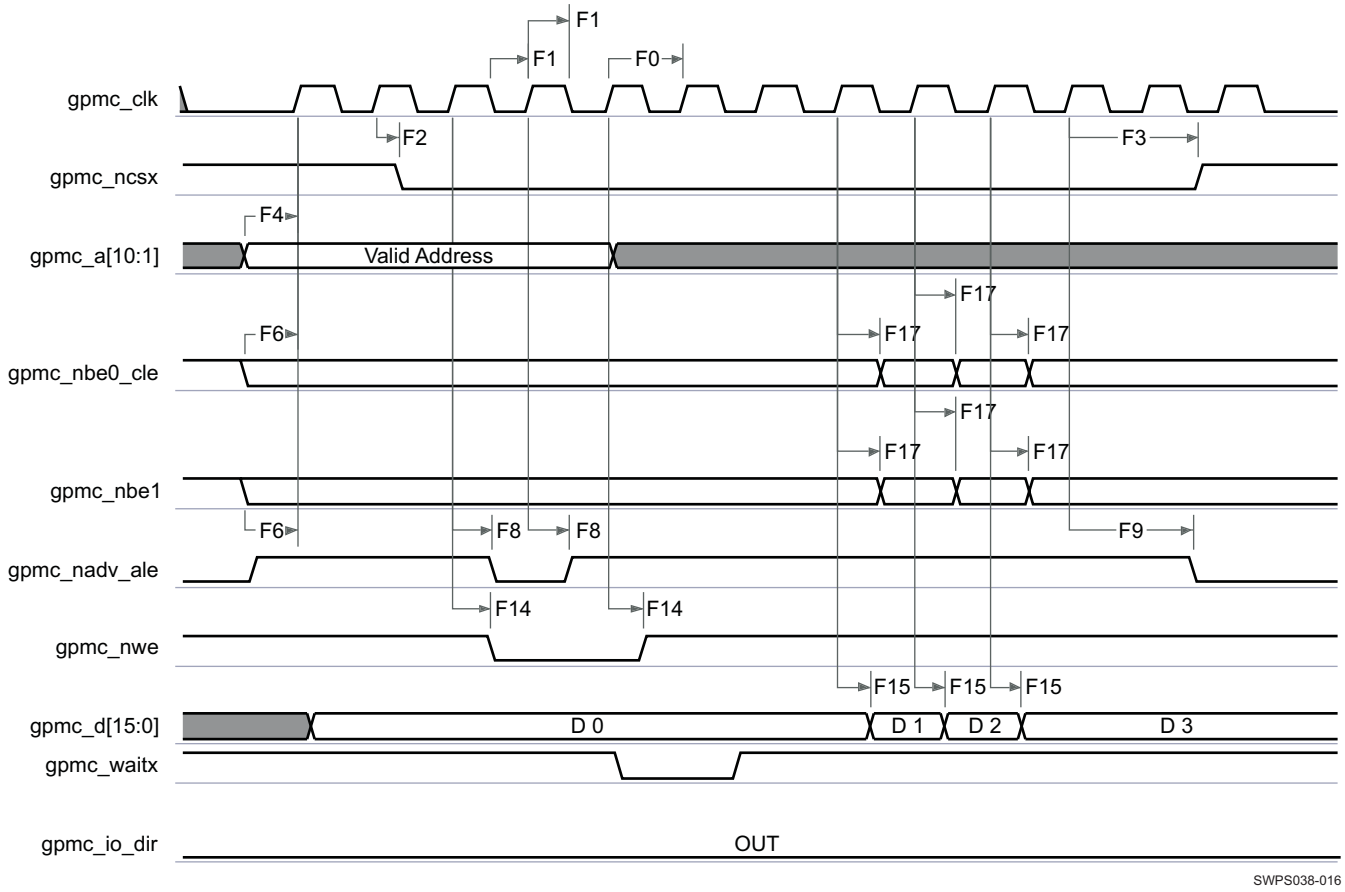

(1) In gpmc_ncsx, x is equal to 0, 1, 2, 3, 4, 5, 6, or 7.
(2) In gpmc_waitx, x is equal to 0, 1, 2, or 3.

Figure 6-4. GPMC/NOR Flash—Synchronous Burst Write—(GpmcFCLKDivider > 0)

Copyright © 2010–2011, Texas Instruments Incorporated

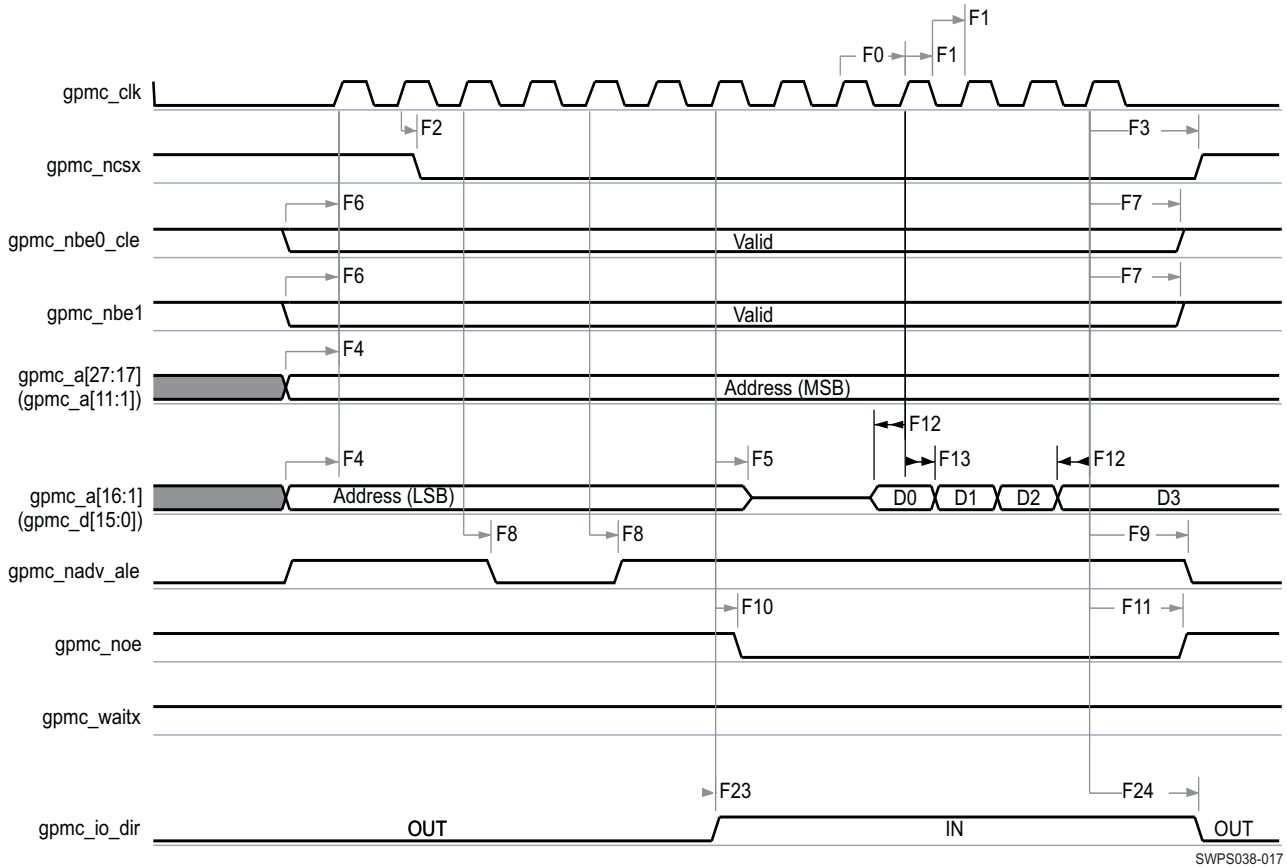

(1) In gpmc_ncsx, x is equal to 0, 1, 2, 3, 4, 5, 6, or 7.
(2) In gpmc_waitx, x is equal to 0, 1, 2, or 3.

Figure 6-5. GPMC/Multiplexed NOR Flash—Synchronous Burst Read

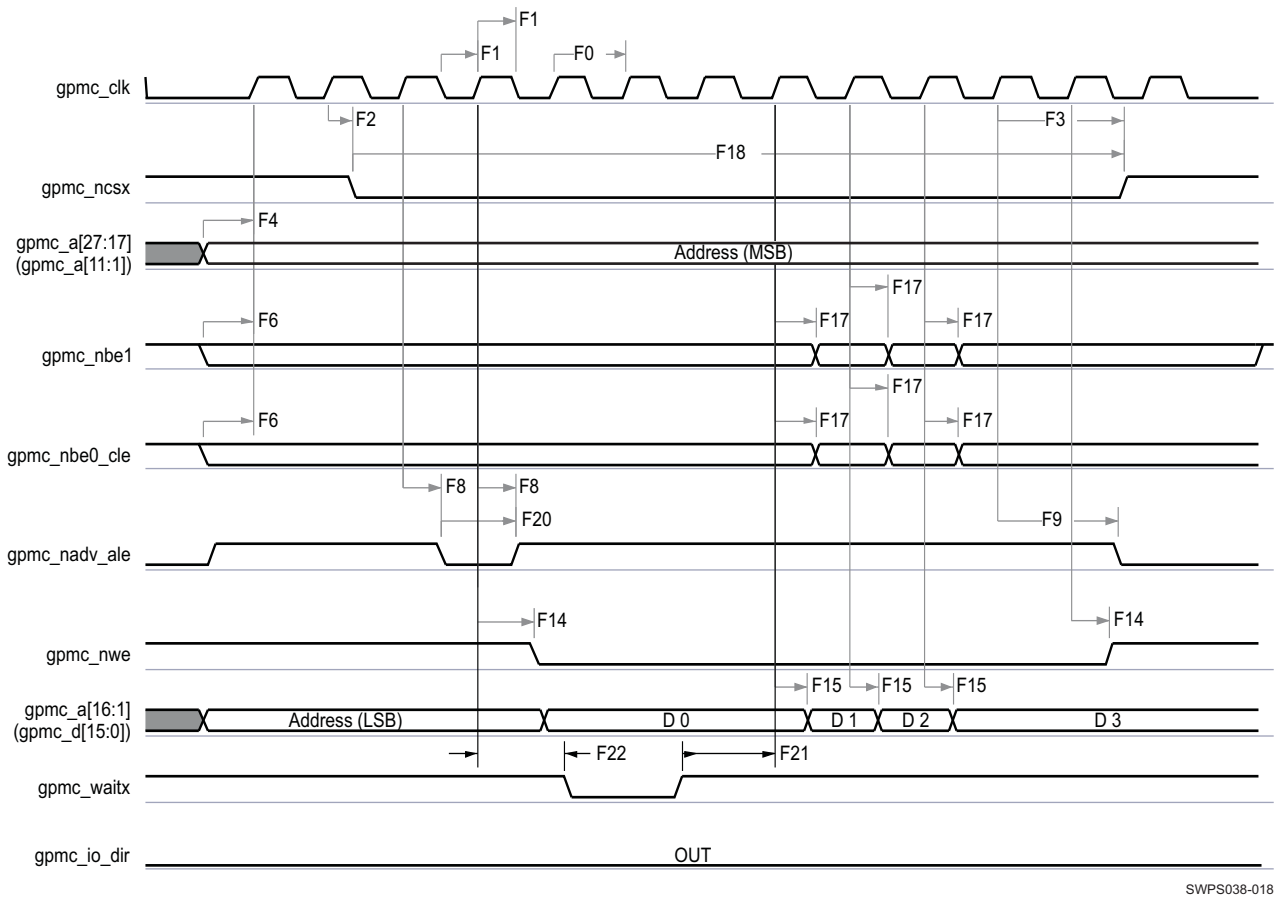

(1) In gpmc_ncsx, x is equal to 0, 1, 2, 3, 4, 5, 6, or 7.
(2) In gpmc_waitx, x is equal to 0, 1, 2, or 3.

Figure 6-6. GPMC/Multiplexed NOR Flash—Synchronous Burst Write

Copyright © 2010–2011, Texas Instruments Incorporated

6.4.1.2 GPMC/NOR Flash—Asynchronous Mode

Table 6-6 and Table 6-7 assume testing over the recommended operating conditions and electrical characteristic conditions below (see Figure 6-7 through Figure 6-12).

Table 6-5. GPMC/NOR Flash Timing Conditions—Asynchronous Mode

TIMING CONDITION PARAMETER		VALUE	UNIT
Input Conditions			
t_R	Input signal rise time	1.8	ns
t_F	Input signal fall time	1.8	ns
Output Conditions			
C_{LOAD}	Output load capacitance(1)	16	pF

(1) The load setting of the IO buffer: LB0 = 0.

Table 6-6. GPMC/NOR Flash Internal Timing Parameters—Asynchronous Mode(1) (2) (4)

NO.	PARAMETER	OPP100		OPP50		UNIT
		MIN	MAX	MIN	MAX	
FI1	Delay time, output data gpmc_d[15:0] generation from internal functional clock GPMC_FCLK(3)		6.6		7.0	ns
FI2	Delay time, input data gpmc_d[15:0] capture from internal functional clock GPMC_FCLK(3)		4.4		7.0	ns
FI3	Delay time, output chip select gpmc_ncsx generation from internal functional clock GPMC_FCLK(3)		6.5		7.0	ns
FI4	Delay time, output address gpmc_a[27:1] generation from internal functional clock GPMC_FCLK(3)		7.6		7.0	ns
FI5	Delay time, output address gpmc_a[27:1] valid from internal functional clock GPMC_FCLK(3)		7.6		7.0	ns
FI6	Delay time, output lower-byte enable/command latch enable gpmc_nbe0_cle, output upper-byte enable gpmc_nbe1 generation from internal functional clock GPMC_FCLK(3)		6.5		7.0	ns
FI7	Delay time, output enable gpmc_noe generation from internal functional clock GPMC_FCLK(3)		5.8		7.0	ns
FI8	Delay time, output write enable gpmc_nwe generation from internal functional clock GPMC_FCLK(3)		7.0		7.0	ns
FI9	Skew, internal functional clock GPMC_FCLK(3)		100		170	ps
FI10	Delay time, IO direction generation from internal functional clock GPMC_FCLK(3)		6.3		7.0	ps

(1) The internal parameters table must be used to calculate data access time stored in the corresponding CS register bit field.

(2) Internal parameters are referred to the GPMC functional internal clock which is not provided externally.

(3) GPMC_FCLK is general-purpose memory controller internal functional clock.

(4) See Section 4.3.4, *Processor Clocks*.

Table 6-7. GPMC/NOR Flash Timing Requirements—Asynchronous Mode[7]

NO.	PARAMETER		OPP100		OPP50		UNIT
			MIN	MAX	MIN	MAX	
FA5[1]	$t_{acc(d)}$	Data access time		H[5]		H[5]	ns
FA20[3]	$t_{acc1\text{-}pgmode(d)}$	Page mode successive data access time		P[4]		P[4]	ns
FA21[2]	$t_{acc2\text{-}pgmode(d)}$	Page mode first data access time		H[5]		H[5]	ns

(1) The FA5 parameter illustrates the amount of time required to internally sample input data. It is expressed in number of GPMC functional clock cycles. From start of read cycle and after FA5 functional clock cycles, input data is internally sampled by active functional clock edge. FA5 value must be stored inside the AccessTime register bit field.

(2) The FA21 parameter illustrates amount of time required to internally sample first input page data. It is expressed in number of GPMC functional clock cycles. From start of read cycle and after FA21 functional clock cycles, first input page data is internally sampled by active functional clock edge. FA21 value must be stored inside the AccessTime register bit field.

(3) The FA20 parameter illustrates amount of time required to internally sample successive input page data. It is expressed in number of GPMC functional clock cycles. After each access to input page data, next input page data is internally sampled by active functional clock edge after FA20 functional clock cycles. The FA20 value must be stored in the PageBurstAccessTime register bit field.

(4) P = PageBurstAccessTime * (TimeParaGranularity + 1) * GPMC_FCLK[6]

(5) H = AccessTime * (TimeParaGranularity + 1) * GPMC_FCLK[6]

(6) GPMC_FCLK is general-purpose memory controller internal functional clock period in ns.

(7) See Section 4.3.4, *Processor Clocks*.

Table 6-8. GPMC/NOR Flash Switching Characteristics—Asynchronous Mode[16]

NO.	PARAMETER			OPP100		OPP50		UNIT
				MIN	MAX	MIN	MAX	
	$t_{R(d)}$	Rise time, output data gpmc_d[15:0]			2		2	ns
	$t_{F(d)}$	Fall time, output data gpmc_d[15:0]			2		2	ns
FA0	$t_{w(nbeV)}$	Pulse duration, output lower-byte enable/command latch enable gpmc_nbe0_cle, output upper-byte enable gpmc_nbe1 valid time	Read	N[12]		N[12]		ns
			Write	N[12]		N[12]		
FA1	$t_{w(ncsV)}$	Pulse duration, output chip select gpmc_ncsx[13] low	Read	A[1]		A[1]		ns
			Write	A[1]		A[1]		
FA3	$t_{d(ncsV\text{-}nadvIV)}$	Delay time, output chip select gpmc_ncsx[13] valid to output address valid/address latch enable gpmc_nadv_ale invalid	Read	B[2] – 0.2	B[2] + 2.0	B[2] – 0.2	B[2] + 2.6	ns
			Write	B[2] – 0.2	B[2] + 2.0	B[2] – 0.2	B[2] + 2.6	
FA4	$t_{d(ncsV\text{-}noeIV)}$	Delay time, output chip select gpmc_ncsx[13] valid to output enable gpmc_noe invalid (Single read)		C[3] – 0.2	C[3] + 2.0	C[3] – 0.2	C[3] + 2.6	ns
FA9	$t_{d(aV\text{-}ncsV)}$	Delay time, output address gpmc_a[27:1] valid to output chip select gpmc_ncsx[13] valid		J[9] – 0.2	J[9] + 2.0	J[9] – 0.2	J[9] + 2.6	ns
FA10	$t_{d(nbeV\text{-}ncsV)}$	Delay time, output lower-byte enable/command latch enable gpmc_nbe0_cle, output upper-byte enable gpmc_nbe1 valid to output chip select gpmc_ncsx[13] valid		J[9] – 0.2	J[9] + 2.0	J[9] – 0.2	J[9] + 2.6	ns
FA12	$t_{d(ncsV\text{-}nadvV)}$	Delay time, output chip select gpmc_ncsx[13] valid to output address valid/address latch enable gpmc_nadv_ale valid		K[10] – 0.2	K[10] + 2.0	K[10] – 0.2	K[10] + 2.6	ns
FA13	$t_{d(ncsV\text{-}noeV)}$	Delay time, output chip select gpmc_ncsx[13] valid to output enable gpmc_noe valid		L[11] – 0.2	L[11] + 2.0	L [11] – 0.2	L[11] + 2.6	ns
FA14	$t_{d(ncsV\text{-}iodir)}$	Delay time, output chip select gpmc_ncsx[13] valid to output IO direction control gpmc_io_dir high		L[11] – 0.2	L[11] + 2.0	L[11] – 0.2	L[11] + 2.6	ns
FA15	$t_{d(ncsV\text{-}iodir)}$	Delay time, output chip select gpmc_ncsx[13] valid to output IO direction control gpmc_io_dir low		M[14] – 0.2	M[14] + 2.0	M[14] – 0.2	M[14] + 2.6	ns

Copyright © 2010–2011, Texas Instruments Incorporated

Table 6-8. GPMC/NOR Flash Switching Characteristics—Asynchronous Mode[16] (continued)

NO.	PARAMETER		OPP100		OPP50		UNIT
			MIN	MAX	MIN	MAX	
FA16	$t_{w(aIV)}$	Pulse durationm output address gpmc_a[26:1] invalid between 2 successive R/W accesses	G[7]		G[7]		ns
FA18	$t_{d(ncsV-noeIV)}$	Delay time, output chip select gpmc_ncsx[13] valid to output enable gpmc_noe invalid (Burst read)	I[8] – 0.2	I[8] + 2.0	I[8] – 0.2	I[8] + 2.6	ns
FA20	$t_{w(aV)}$	Pulse duration, output address gpmc_a[27:1] valid – 2nd, 3rd, and 4th accesses	D[4]		D[4]		ns
FA25	$t_{d(ncsV-nweV)}$	Delay time, output chip select gpmc_ncsx[13] valid to output write enable gpmc_nwe valid	E[5] – 0.2	E[5] + 2.0	E[5] – 0.2	E[5] + 2.6	ns
FA27	$t_{d(ncsV-nweIV)}$	Delay time, output chip select gpmc_ncsx[13] valid to output write enable gpmc_nwe invalid	F[6] – 0.2	F[6] + 2.0	F[6] – 0.2	F[6] + 2.6	ns
FA28	$t_{d(nweV-dV)}$	Delay time, output write enable gpmc_ nwe valid to output data gpmc_d[15:0] valid		2.0		2.6	ns
FA29	$t_{d(dV-ncsV)}$	Delay time, output data gpmc_d[15:0] valid to output chip select gpmc_ncsx[13] valid	J[9] – 0.2	J[9] + 2.0	J[9] – 0.2	J[9] + 2.6	ns
FA37	$t_{d(noeV-aIV)}$	Delay time, output enable gpmc_noe valid to output address gpmc_a[16:1]_d[15:0] phase end		2.0		2.6	ns

(1) For single read: A = (CSRdOffTime – CSOnTime) * (TimeParaGranularity + 1) * GPMC_FCLK[15]
For single write: A = (CSWrOffTime – CSOnTime) * (TimeParaGranularity + 1) * GPMC_FCLK[15]
For burst read: A = (CSRdOffTime – CSOnTime + (n – 1) * PageBurstAccessTime) * (TimeParaGranularity + 1) * GPMC_FCLK[15]
For burst write: A = (CSWrOffTime – CSOnTime + (n – 1) * PageBurstAccessTime) * (TimeParaGranularity + 1) * GPMC_FCLK[15]
with n being the page burst access number

(2) For reading: B = ((ADVRdOffTime – CSOnTime) * (TimeParaGranularity + 1) + 0.5 * (ADVExtraDelay – CSExtraDelay)) * GPMC_FCLK[15]
For writing: B = ((ADVWrOffTime – CSOnTime) * (TimeParaGranularity + 1) + 0.5 * (ADVExtraDelay – CSExtraDelay)) * GPMC_FCLK[15]

(3) C = ((OEOffTime – CSOnTime) * (TimeParaGranularity + 1) + 0.5 * (OEExtraDelay – CSExtraDelay)) * GPMC_FCLK[15]

(4) D = PageBurstAccessTime * (TimeParaGranularity + 1) * GPMC_FCLK[15]

(5) E = ((WEOnTime – CSOnTime) * (TimeParaGranularity + 1) + 0.5 * (WEExtraDelay – CSExtraDelay)) * GPMC_FCLK[15]

(6) F = ((WEOffTime – CSOnTime) * (TimeParaGranularity + 1) + 0.5 * (WEExtraDelay – CSExtraDelay)) * GPMC_FCLK[15]

(7) G = Cycle2CycleDelay * GPMC_FCLK[15]

(8) I = ((OEOffTime + (n – 1) * PageBurstAccessTime – CSOnTime) * (TimeParaGranularity + 1) + 0.5 * (OEExtraDelay – CSExtraDelay)) * GPMC_FCLK[15]

(9) J = (CSOnTime * (TimeParaGranularity + 1) + 0.5 * CSExtraDelay) * GPMC_FCLK[15]

(10) K = ((ADVOnTime – CSOnTime) * (TimeParaGranularity + 1) + 0.5 * (ADVExtraDelay – CSExtraDelay)) * GPMC_FCLK[15]

(11) L = ((OEOnTime – CSOnTime) * (TimeParaGranularity + 1) + 0.5 * (OEExtraDelay – CSExtraDelay)) * GPMC_FCLK[15]

(12) For single read: N = RdCycleTime * (TimeParaGranularity + 1) * GPMC_FCLK[15]
For single write: N = WrCycleTime * (TimeParaGranularity + 1) * GPMC_FCLK[15]
For burst read: N = (RdCycleTime + (n – 1) * PageBurstAccessTime) * (TimeParaGranularity + 1) * GPMC_FCLK[15]
For burst write: N = (WrCycleTime + (n – 1) * PageBurstAccessTime) * (TimeParaGranularity + 1) * GPMC_FCLK[15]

(13) In gpmc_ncsx, x is equal to 0, 1, 2, 3, 4, 5, 6, or 7.

(14) M = ((RdCycleTime – CSOnTime) * (TimeParaGranularity + 1) – 0.5 * CSExtraDelay) * GPMC_FCLK[15]
Above M parameter expression is given as one example of GPMC programming. IO DIR signal will go from IN to OUT after both RdCycleTime and BusTurnAround completion. Behavior of IO direction signal does depend on kind of successive Read/Write accesses performed to Memory and multiplexed or nonmultiplexed memory addressing scheme, bus keeping feature enabled or not. IO DIR behaviour is automatically handled by GPMC controller. For a full description of the gpmc_io_dir feature, see the *AM/DM37x Multimedia Device Technical Reference Manual* (literature number SPRUGN4).

(15) GPMC_FCLK is general-purpose memory controller internal functional clock period in ns.

(16) See Section 4.3.4, *Processor Clocks*.

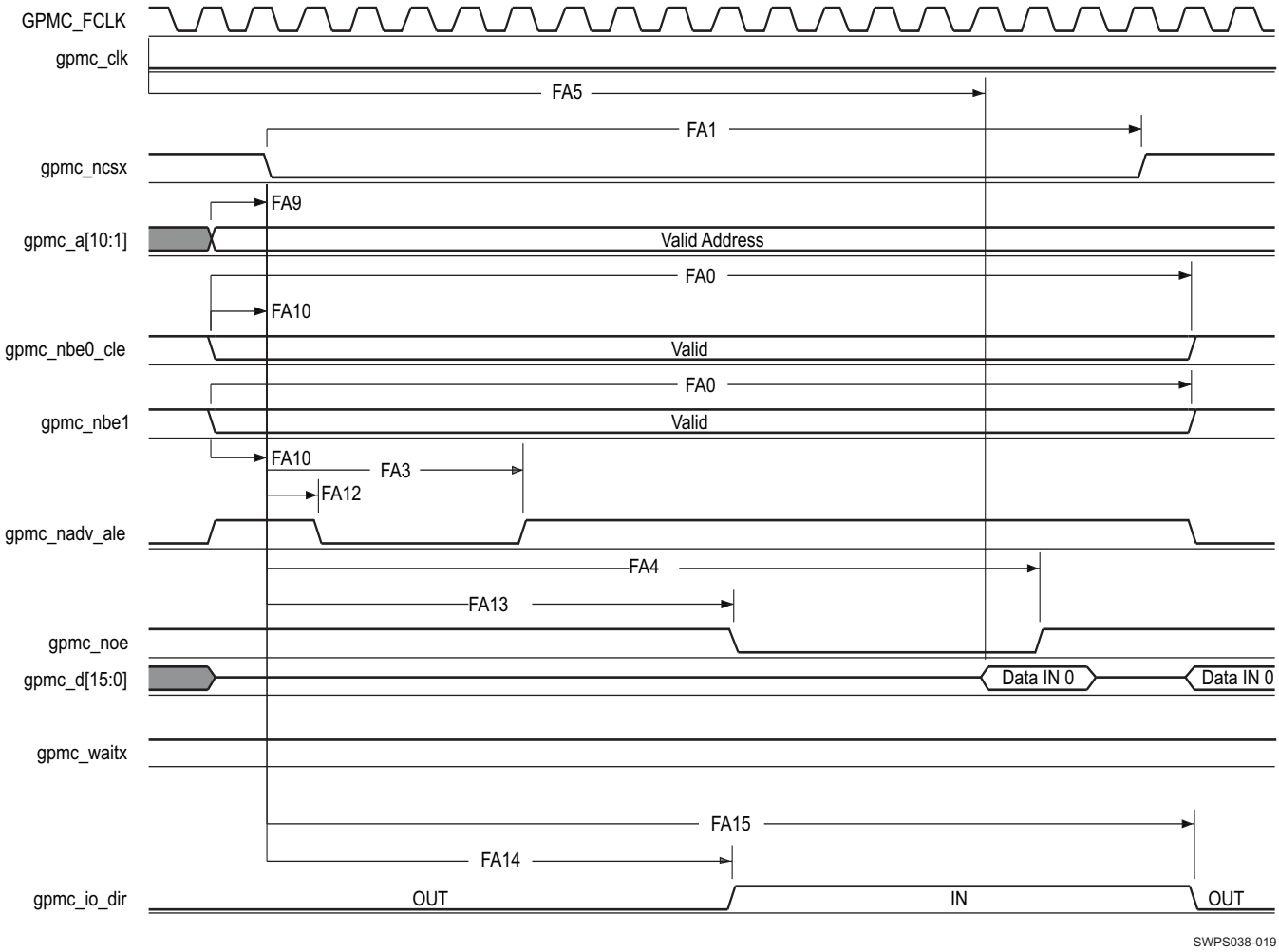

(1) In gpmc_ncsx, x is equal to 0, 1, 2, 3, 4, 5, 6, or 7. In gpmc_waitx, x is equal to 0, 1, 2, or 3.

(2) FA5 parameter illustrates amount of time required to internally sample input data. It is expressed in number of GPMC functional clock cycles. From start of read cycle and after FA5 functional clock cycles, input data will be internally sampled by active functional clock edge. FA5 value must be stored inside AccessTime register bits field.

(3) GPMC_FCLK is an internal clock (GPMC functional clock) not provided externally.

Figure 6-7. GPMC / NOR Flash—Asynchronous Read—Single Word

Copyright © 2010–2011, Texas Instruments Incorporated

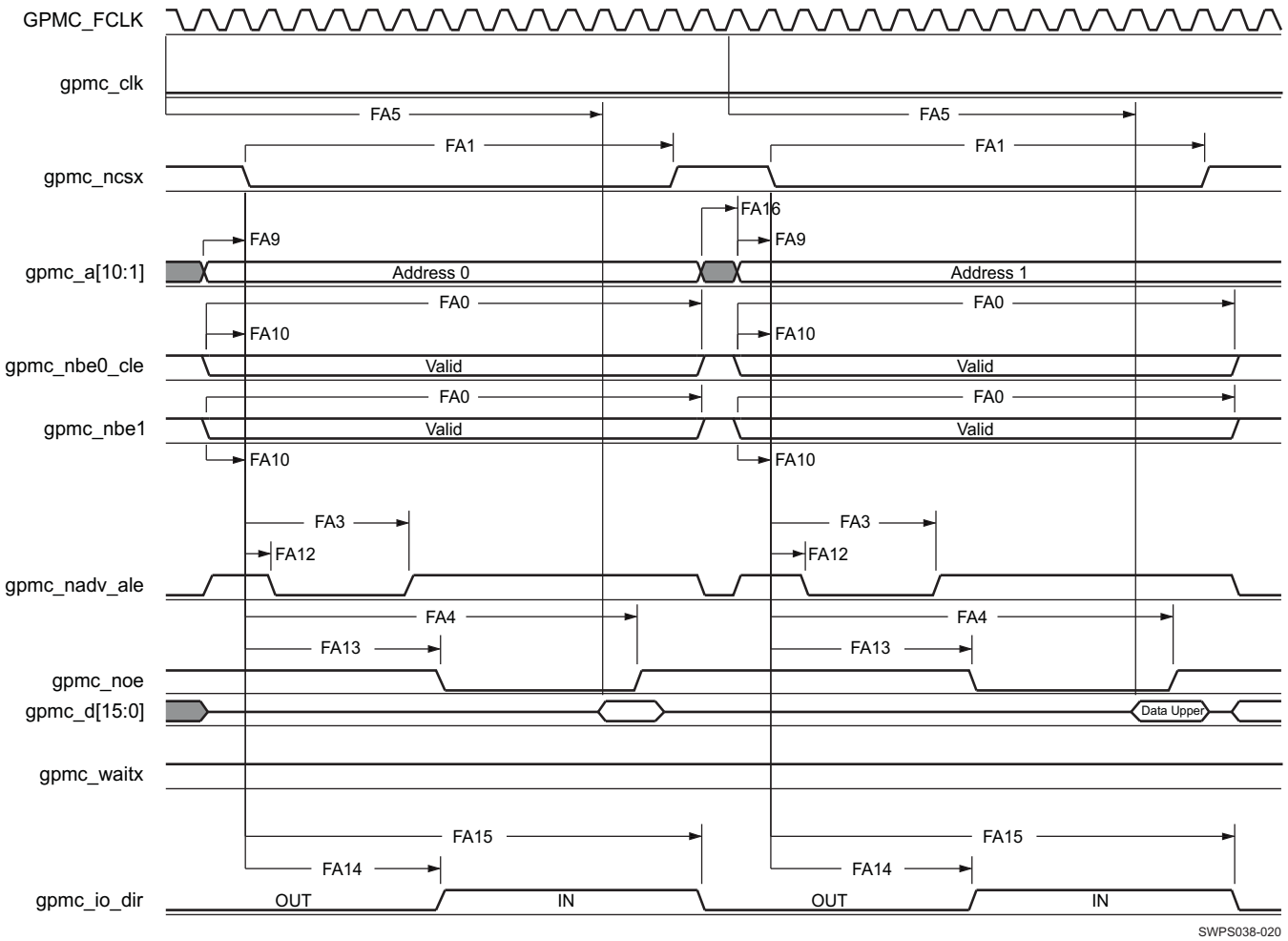

(1) In gpmc_ncsx, x is equal to 0, 1, 2, 3, 4, 5, 6, or 7. In gpmc_waitx, x is equal to 0, 1, 2, or 3.

(2) FA5 parameter illustrates amount of time required to internally sample input data. It is expressed in number of GPMC functional clock cycles. From start of read cycle and after FA5 functional clock cycles, input data will be internally sampled by active functional clock edge. FA5 value must be stored inside AccessTime register bits field.

(3) GPMC_FCLK is an internal clock (GPMC functional clock) not provided externally.

Figure 6-8. GPMC / NOR Flash—Asynchronous Read—32-bit

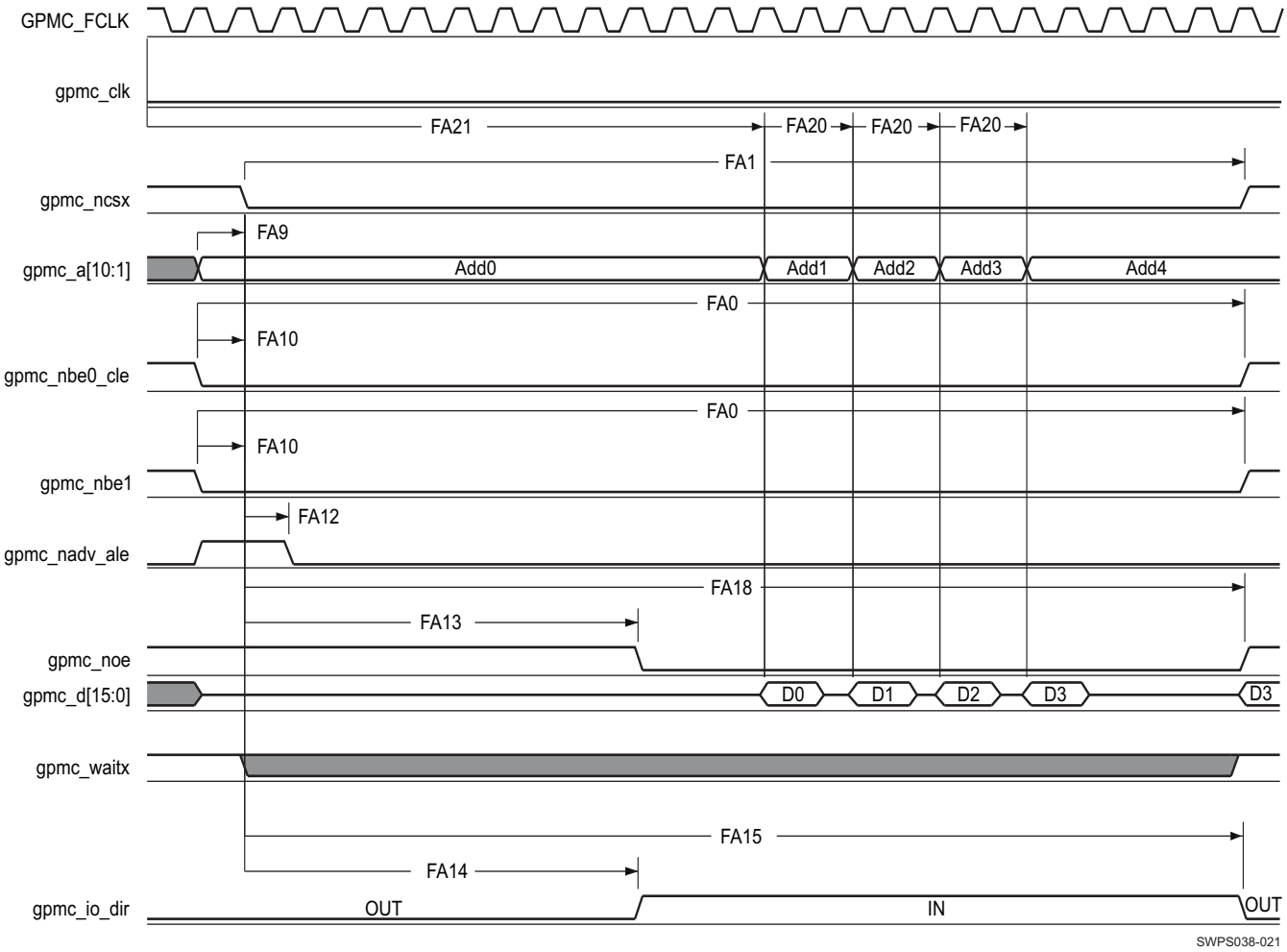

(1) In gpmc_ncsx, x is equal to 0, 1, 2, 3, 4, 5, 6, or 7. In gpmc_waitx, x is equal to 0, 1, 2, or 3.

(2) FA21 parameter illustrates amount of time required to internally sample first input page data. It is expressed in number of GPMC functional clock cycles. From start of read cycle and after FA21 functional clock cycles, first input page data will be internally sampled by active functional clock edge. FA21 calculation must be stored inside AccessTime register bits field.

(3) FA20 parameter illustrates amount of time required to internally sample successive input page data. It is expressed in number of GPMC functional clock cycles. After each access to input page data, next input page data will be internally sampled by active functional clock edge after FA20 functional clock cycles. FA20 is also the duration of address phases for successive input page data (excluding first input page data). FA20 value must be stored in PageBurstAccessTime register bits field.

(4) GPMC_FCLK is an internal clock (GPMC functional clock) not provided externally.

Figure 6-9. GPMC / NOR Flash—Asynchronous Read—Page Mode 4x16-bit

Copyright © 2010–2011, Texas Instruments Incorporated

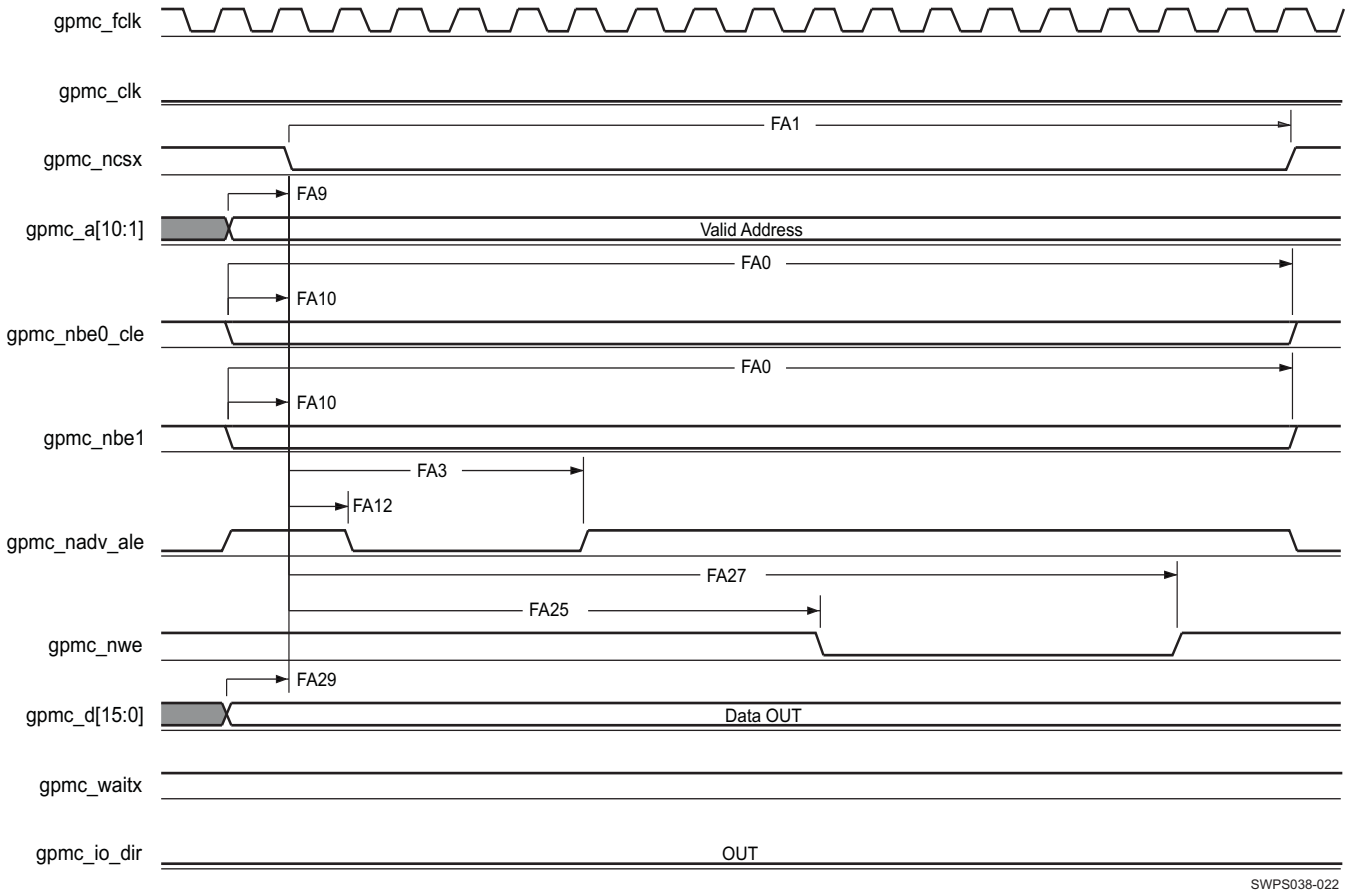

(1) In gpmc_ncsx, x is equal to 0, 1, 2, 3, 4, 5, 6, or 7. In gpmc_waitx, x is equal to 0, 1, 2, or 3.

Figure 6-10. GPMC / NOR Flash—Asynchronous Write—Single Word

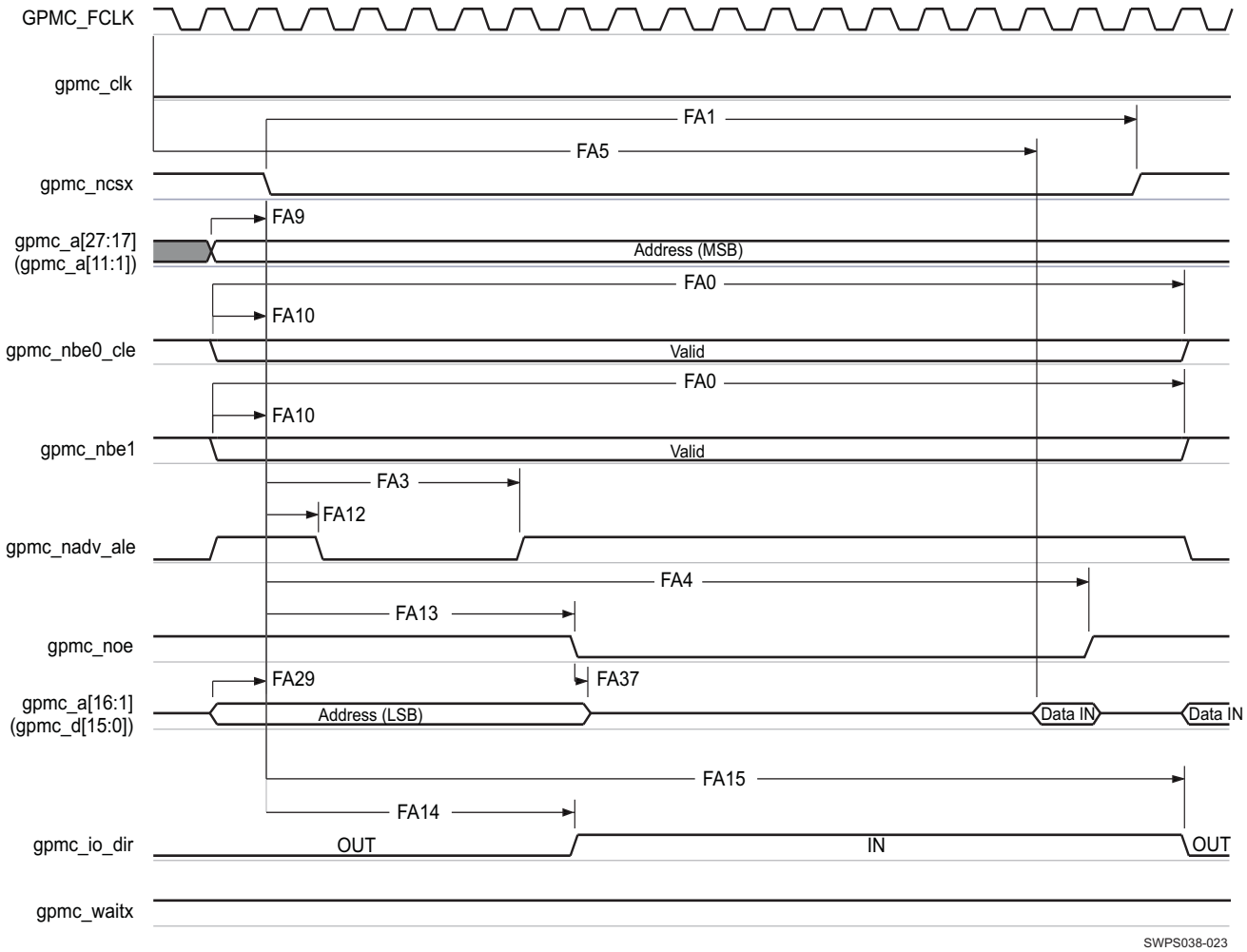

(1) In gpmc_ncsx, x is equal to 0, 1, 2, 3, 4, 5, 6, or 7. In gpmc_waitx, x is equal to 0, 1, 2, or 3.

(2) FA5 parameter illustrates amount of time required to internally sample input data. It is expressed in number of GPMC functional clock cycles. From start of read cycle and after FA5 functional clock cycles, input data will be internally sampled by active functional clock edge. FA5 value must be stored inside AccessTime register bits field.

(3) GPMC_FCLK is an internal clock (GPMC functional clock) not provided externally.

Figure 6-11. GPMC / Multiplexed NOR Flash—Asynchronous Read—Single Word

Copyright © 2010–2011, Texas Instruments Incorporated

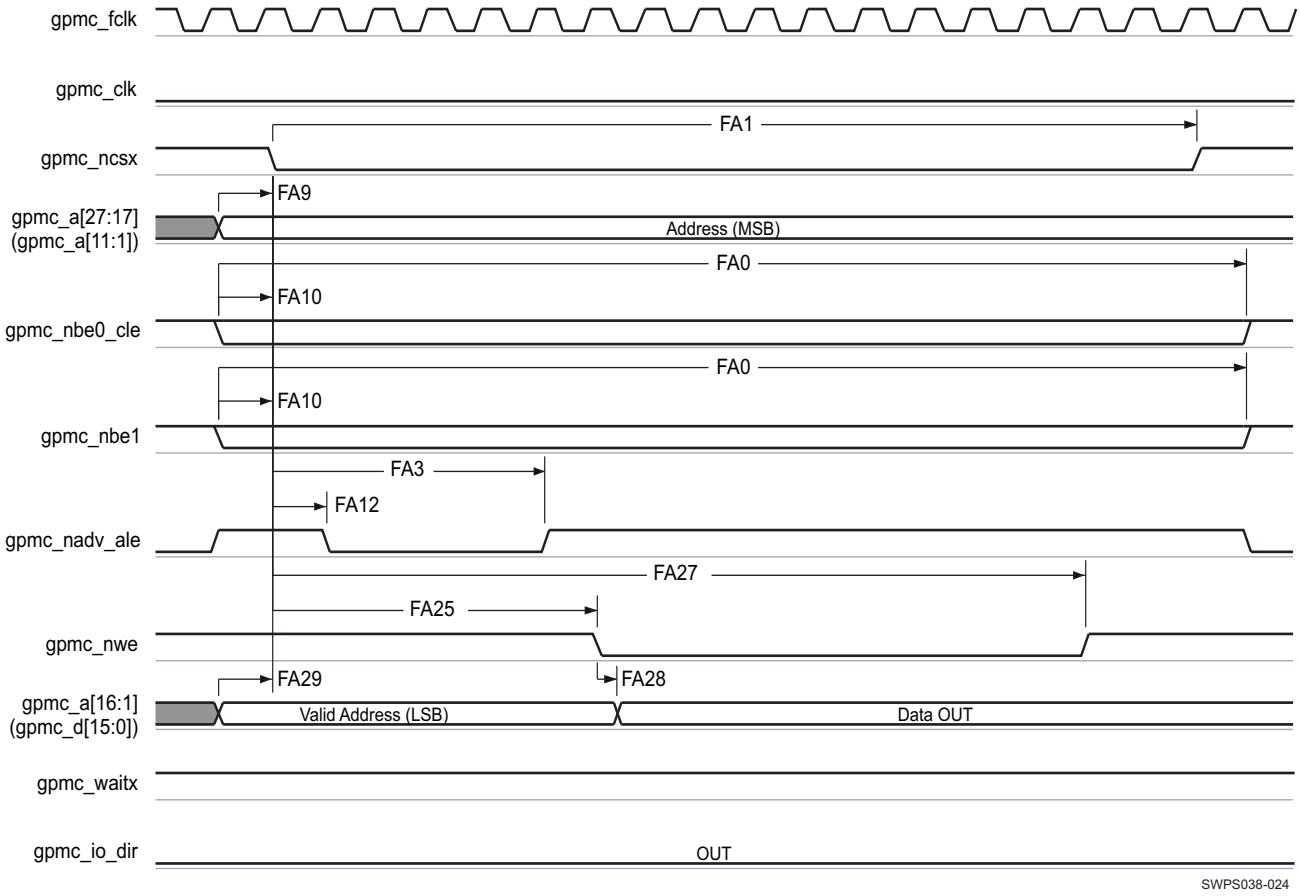

(1) In gpmc_ncsx, x is equal to 0, 1, 2, 3, 4, 5, 6, or 7. In gpmc_waitx, x is equal to 0, 1, 2, or 3.

Figure 6-12. GPMC / Multiplexed NOR Flash—Asynchronous Write—Single Word

6.4.1.3 GPMC/NAND Flash—Asynchronous Mode

Table 6-10 and Table 6-11 assume testing over the recommended operating conditions and electrical characteristic conditions below (see Figure 6-13 through Figure 6-16).

Table 6-9. GPMC/NAND Flash Timing Conditions—Asynchronous Mode

TIMING CONDITION PARAMETER		VALUE	UNIT
Input Conditions			
t_R	Input signal rise time	1.8	ns
t_F	Input signal fall time	1.8	ns
Output Conditions			
C_{LOAD}	Output load capacitance(1)	16	pF

(1) The load setting of the IO buffer: LB0 = 0.

Table 6-10. GPMC/NAND Flash Internal Timing Parameters—Asynchronous Mode(1) (2) (4)

NO.	PARAMETER	OPP100		OPP50		UNIT
		MIN	MAX	MIN	MAX	
GNFI1	Delay time, output data gpmc_d[15:0] generation from internal functional clock GPMC_FCLK(3)		6.5		9.1	ns
GNFI2	Delay time, input data gpmc_d[15:0] capture from internal functional clock GPMC_FCLK(3)		4.0		5.6	ns
GNFI3	Delay time, output chip select gpmc_ncsx generation from internal functional clock GPMC_FCLK(3)		6.5		9.1	ns
GNFI4	Delay time, output address valid/address latch enable gpmc_nadv_ale generation from internal functional clock GPMC_FCLK(3)		6.5		9.1	ns
GNFI5	Delay time, output lower-byte enable/command latch enable gpmc_nbe0_cle generation from internal functional clock GPMC_FCLK(3)		6.5		9.1	ns
GNFI6	Delay time, output enable gpmc_noe generation from internal functional clock GPMC_FCLK(3)		6.5		9.1	ns
GNFI7	Delay time, output write enable gpmc_nwe generation from internal functional clock GPMC_FCLK(3)		6.5		9.1	ns
GNFI8	Skew, functional clock GPMC_FCLK(3)		100		170	ps

(1) Internal parameters table must be used to calculate data access time stored in the corresponding CS register bit field.

(2) Internal parameters are referred to the GPMC functional internal clock which is not provided externally.

(3) GPMC_FCLK is general-purpose memory controller internal functional clock.

(4) See Section 4.3.4, *Processor Clocks*.

Table 6-11. GPMC/NAND Flash Timing Requirements—Asynchronous Mode(4)

NO.	PARAMETER		OPP100		OPP50		UNIT
			MIN	MAX	MIN	MAX	
GNF12(1)	$t_{acc(d)}$	Access time, input data gpmc_d[15:0]		J(2)		J(2)	ns

(1) The GNF12 parameter illustrates the amount of time required to internally sample input data. It is expressed in number of GPMC functional clock cycles. From start of the read cycle and after GNF12 functional clock cycles, input data is internally sampled by the active functional clock edge. The GNF12 value must be stored inside AccessTime register bit field.

(2) J = AccessTime * (TimeParaGranularity + 1) * GPMC_FCLK(3)

(3) GPMC_FCLK is general-purpose memory controller internal functional clock period in ns.

(4) See Section 4.3.4, *Processor Clocks*.

Copyright © 2010–2011, Texas Instruments Incorporated

Table 6-12. GPMC/NAND Flash Switching Characteristics—Asynchronous Mode[15]

NO.	PARAMETER		OPP100		OPP50		UNIT
			MIN	MAX	MIN	MAX	
	$t_{R(d)}$	Rise time, output data gpmc_d[15:0]		2		2	ns
	$t_{F(d)}$	Fall time, output data gpmc_d[15:0]		2		2	ns
GNF0	$t_{w(nweV)}$	Pulse duration, output write enable gpmc_nwe valid	A[1]		A[1]		ns
GNF1	$t_{d(ncsV\text{-}nweV)}$	Delay time, output chip select gpmc_ncsx[13] valid to output write enable gpmc_nwe valid	B[2] – 0.2	B[2] + 2.0	B[2] – 0.2	B[2] + 2.6	ns
GNF2	$t_{w(cleH\text{-}nweV)}$	Delay time, output lower-byte enable/command latch enable gpmc_nbe0_cle high to output write enable gpmc_nwe valid	C[3] – 0.2	C[3] + 2.0	C[3] – 0.2	C[3] + 2.6	ns
GNF3	$t_{w(nweV\text{-}dV)}$	Delay time, output data gpmc_d[15:0] valid to output write enable gpmc_nwe valid	D[4] – 0.2	D[4] + 2.0	D[4] – 0.2	D[4] + 2.6	ns
GNF4	$t_{w(nweIV\text{-}dIV)}$	Delay time, output write enable gpmc_nwe invalid to output data gpmc_d[15:0] invalid	E[5] – 0.2	E[5] + 2.0	E[5] – 0.2	E[5] + 2.6	ns
GNF5	$t_{w(nweIV\text{-}cleIV)}$	Delay time, output write enable gpmc_nwe invalid to output lower-byte enable/command latch enable gpmc_nbe0_cle invalid	F[6] – 0.2	F[6] + 2.0	F[6] – 0.2	F[6] + 2.6	ns
GNF6	$t_{w(nweIV\text{-}ncsIV)}$	Delay time, output write enable gpmc_nwe invalid to output chip select gpmc_ncsx[13] invalid	G[7] – 0.2	G[7] + 2.0	G[7] – 0.2	G[7] + 2.6	ns
GNF7	$t_{w(aleH\text{-}nweV)}$	Delay time, output address valid/address latch enable gpmc_nadv_ale high to output write enable gpmc_nwe valid	C[3] – 0.2	C[3] + 2.0	C[3] – 0.2	C[3] + 2.6	ns
GNF8	$t_{w(nweIV\text{-}aleIV)}$	Delay time, output write enable gpmc_nwe invalid to output address valid/address latch enable gpmc_nadv_ale invalid	F[6] – 0.2	F[6] + 2.0	F[6] – 0.2	F[6] + 2.6	ns
GNF9	$t_{c(nwe)}$	Cycle time, write	H[8]		H[8]		ns
GNF10	$t_{d(ncsV\text{-}noeV)}$	Delay time, output chip select gpmc_ncsx[13] valid to output enable gpmc_noe valid	I[9] – 0.2	I[9] + 2.0	I[9] – 0.2	I[9] + 2.6	ns
GNF13	$t_{w(noeV)}$	Pulse duration, output enable gpmc_noe valid	K[10]		K[10]		ns
GNF14	$t_{c(noe)}$	Cycle time, read	L[11]		L[11]		ns
GNF15	$t_{w(noeIV\text{-}ncsIV)}$	Delay time, output enable gpmc_noe invalid to output chip select gpmc_ncsx[13] invalid	M[12] – 0.2	M[12] + 2.0	M[12] – 0.2	M[12] + 2.6	ns

(1) A = (WEOffTime – WEOnTime) * (TimeParaGranularity + 1) * GPMC_FCLK[14]
(2) B = ((WEOnTime – CSOnTime) * (TimeParaGranularity + 1) + 0.5 * (WEExtraDelay – CSExtraDelay)) * GPMC_FCLK[14]
(3) C = ((WEOnTime – ADVOnTime) * (TimeParaGranularity + 1) + 0.5 * (WEExtraDelay – ADVExtraDelay)) * GPMC_FCLK[14]
(4) D = (WEOnTime * (TimeParaGranularity + 1) + 0.5 * WEExtraDelay) * GPMC_FCLK[14]
(5) E = ((WrCycleTime – WEOffTime) * (TimeParaGranularity + 1) – 0.5 * WEExtraDelay) * GPMC_FCLK[14]
(6) F = ((ADVWrOffTime – WEOffTime) * (TimeParaGranularity + 1) + 0.5 * (ADVExtraDelay – WEExtraDelay)) * GPMC_FCLK[14]
(7) G = ((CSWrOffTime – WEOffTime) * (TimeParaGranularity + 1) + 0.5 * (CSExtraDelay – WEExtraDelay)) * GPMC_FCLK[14]
(8) H = WrCycleTime * (1 + TimeParaGranularity) * GPMC_FCLK[14]
(9) I = ((OEOnTime – CSOnTime) * (TimeParaGranularity + 1) + 0.5 * (OEExtraDelay – CSExtraDelay)) * GPMC_FCLK[14]
(10) K = (OEOffTime – OEOnTime) * (1 + TimeParaGranularity) * GPMC_FCLK[14]
(11) L = RdCycleTime * (1 + TimeParaGranularity) * GPMC_FCLK[14]
(12) M = ((CSRdOffTime – OEOffTime) * (TimeParaGranularity + 1) + 0.5 * (CSExtraDelay – OEExtraDelay)) * GPMC_FCLK[14]
(13) In gpmc_ncsx, x is equal to 0, 1, 2, 3, 4, 5, 6, or 7.
(14) GPMC_FCLK is general-purpose memory controller internal functional clock period in ns.
(15) See Section 4.3.4, *Processor Clocks*.

Copyright © 2010–2011, Texas Instruments Incorporated

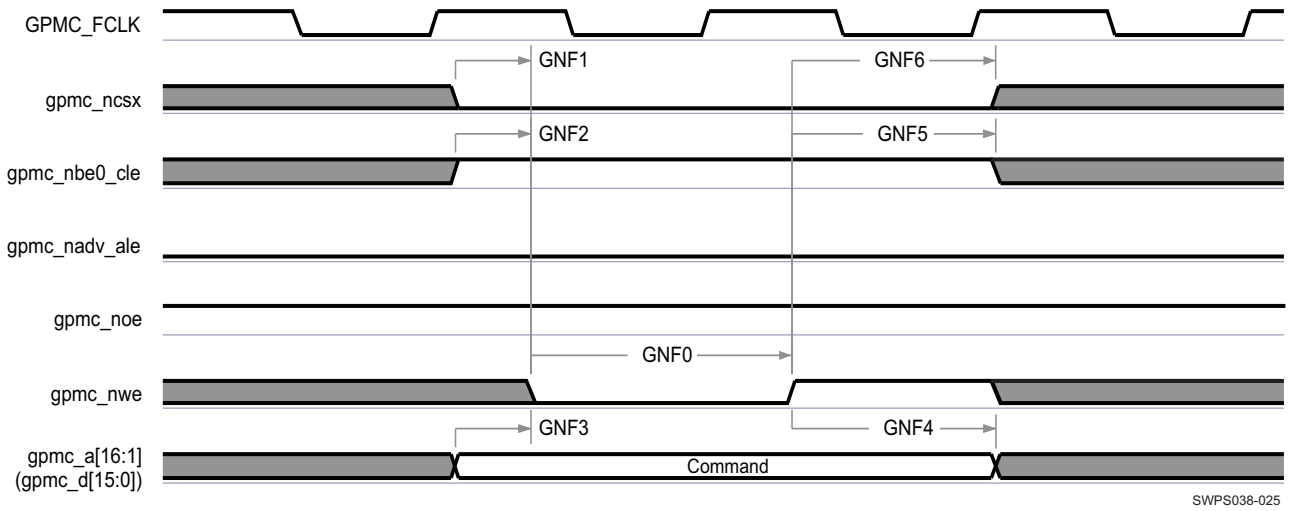

(1) In gpmc_ncsx, x is equal to 0, 1, 2, 3, 4, 5, 6, or 7.

Figure 6-13. GPMC / NAND Flash—Command Latch Cycle

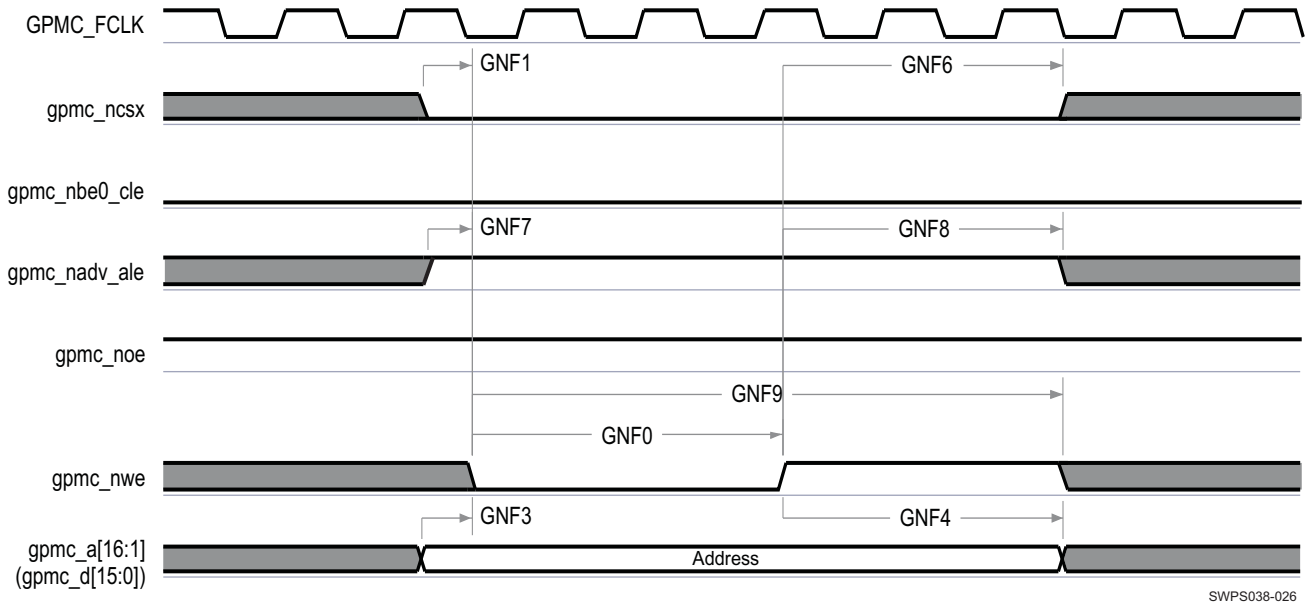

(1) In gpmc_ncsx, x is equal to 0, 1, 2, 3, 4, 5, 6, or 7.

Figure 6-14. GPMC / NAND Flash—Address Latch Cycle

Copyright © 2010–2011, Texas Instruments Incorporated

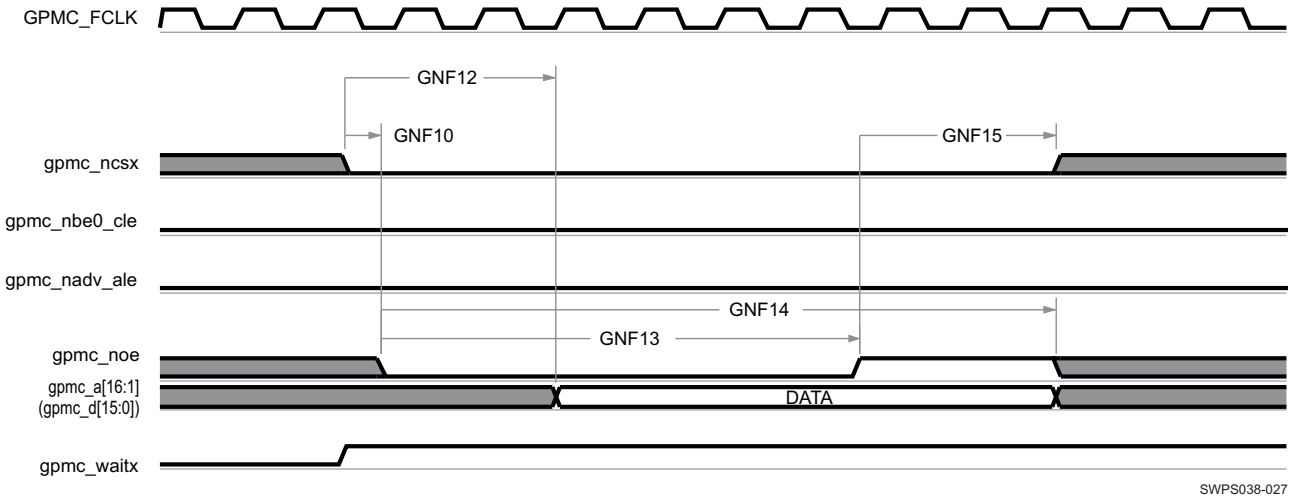

(1) GNF12 parameter illustrates amount of time required to internally sample input data. It is expressed in number of GPMC functional clock cycles. From start of read cycle and after GNF12 functional clock cycles, input data will be internally sampled by active functional clock edge. GNF12 value must be stored inside AccessTime register bits field.

(2) GPMC_FCLK is an internal clock (GPMC functional clock) not provided externally.

(3) In gpmc_ncsx, x is equal to 0, 1, 2, 3, 4, 5, 6, or 7. In gpmc_waitx, x is equal to 0, 1, 2, or 3.

Figure 6-15. GPMC / NAND Flash—Data Read Cycle

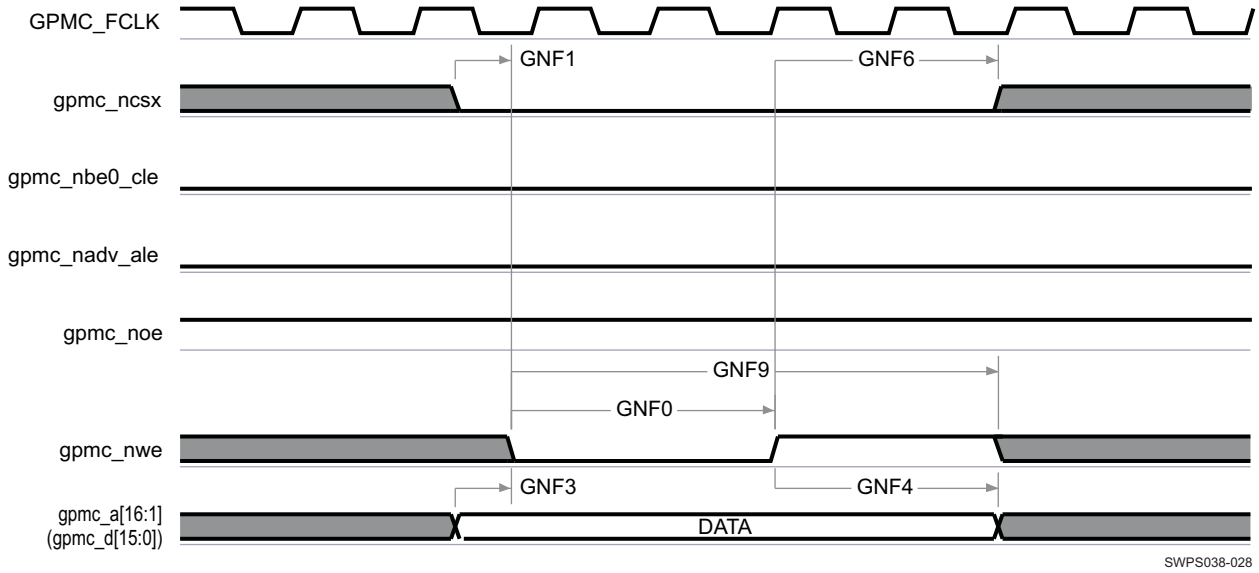

(1) In gpmc_ncsx, x is equal to 0, 1, 2, 3, 4, 5, 6, or 7.

Figure 6-16. GPMC / NAND Flash—Data Write Cycle

6.4.2 SDRAM Memory Controller (SDRC)

NOTE

For more information, see Memory Subsystem / SDRAM Controller (SDRC) Subsystem section of the *AM/DM37x Multimedia Device Technical Reference Manual* (literature number SPRUGN4).

The SDRAM controller subsystem module provides connectivity between the processor and external DRAM memory components. The module includes support for double-data-rate SDRAM (mobile DDR).

6.4.2.1 LPDDR Interface

The LPDDR interface is balled out on the bottom side of the CUS package and on the top side of the POP packages. The LPDDR interface on the top of the POP package has been designed for compatibility any POP LPDDR device with a matching footprint and compliance with the JEDEC LPDDR-266 specification.

This section provides the timing specification for the bottom-side LPDDR interface as a PCB design and manufacturing specification. The design rules constrain PCB trace length, PCB trace skew, signal integrity, cross-talk, and signal timing. These rules, when followed, result in a reliable LPDDR memory system without the need for a complex timing closure process. For more information regarding guidelines for using this LPDDR specification, see the *Understanding TI's PCB Routing Rule-Based DDR Timing Specification* Application Report (literature number SPRAAV0).

6.4.2.1.1 LPDDR Interface Schematic

Figure 6-17 and Figure 6-18 show the LPDDR interface schematics for a LPDDR memory system. The 1 x16 LPDDR system schematic is identical to Figure 6-17 except that the high word LPDDR device is deleted.

Copyright © 2010–2011, Texas Instruments Incorporated

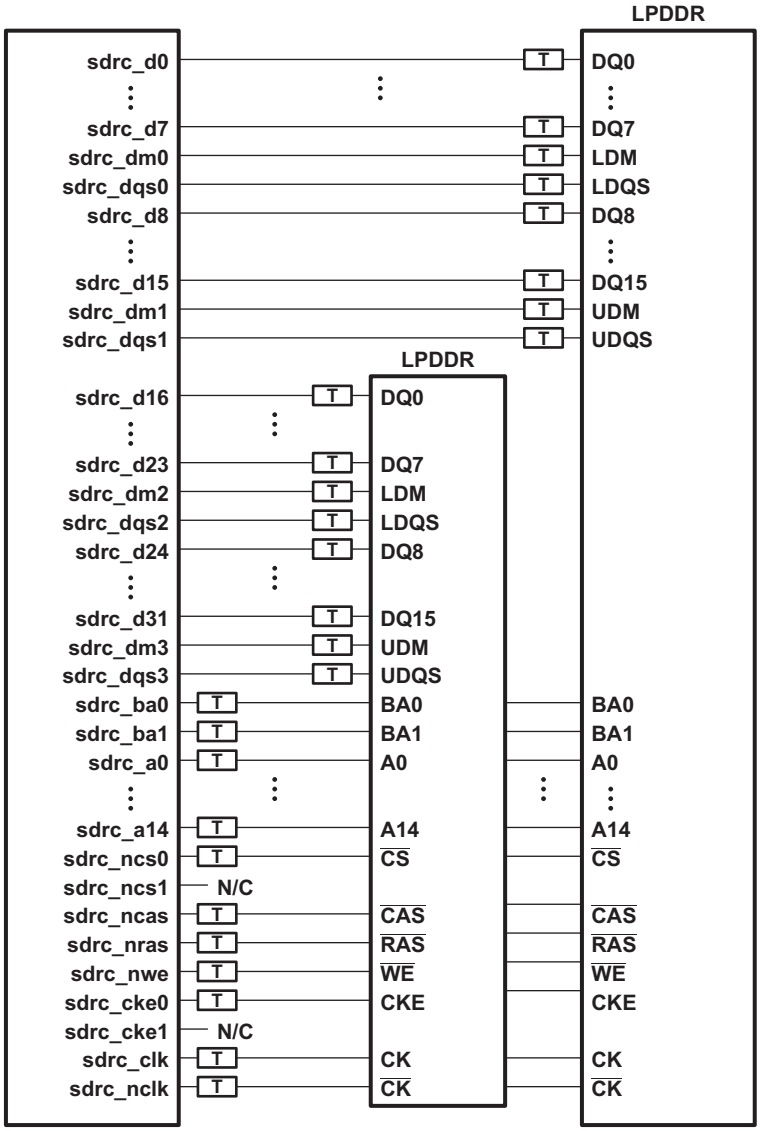

Figure 6-17. DM37x LPDDR High Level Schematic (x16 memories)

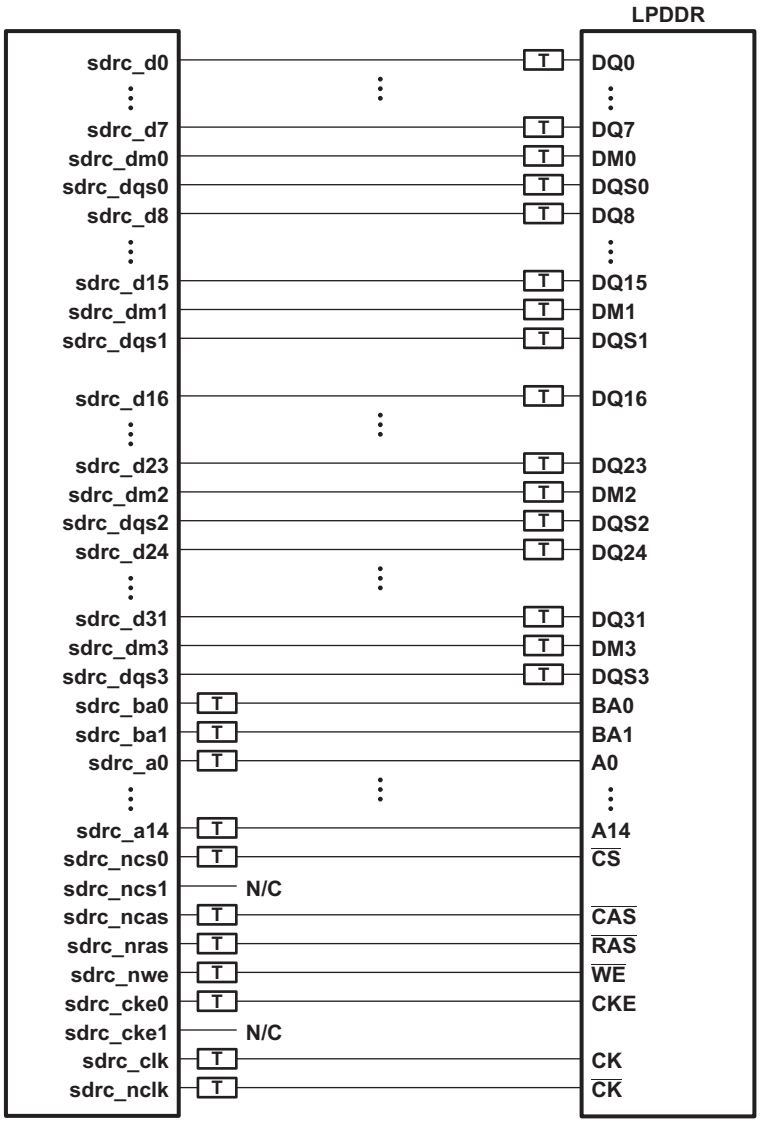

Figure 6-18. DM37x LPDDR High Level Schematic (x32 memory)

6.4.2.1.2 Compatible JEDEC LPDDR Devices

Table 6-13 shows the parameters of the JEDEC LPDDR devices that are compatible with this interface. Generally, the LPDDR interface is compatible with x16 and x32 LPDDR266 and LPDDR333 speed grade LPDDR devices.

Table 6-13. Compatible JEDEC LPDDR Devices

NO.	PARAMETER	MIN	MAX	UNIT	NOTES
1	JEDEC LPDDR Device Speed Grade	LPDDR-266			See Note (1)
2	JEDEC LPDDR Device Bit Width	16	32	Bits	
3	JEDEC LPDDR Device Count	1	2	Devices	See Note (2)
4	JEDEC LPDDR Device Ball Count	60	90	Balls	

Copyright © 2010–2011, Texas Instruments Incorporated

(1) Higher LPDDR speed grades are supported due to inherent JEDEC LPDDR backwards compatibility.
(2) 1 x16 LPDDR device is used for 16 bit LPDDR memory system. 1x32 or 2x16 LPDDR devices are used for a 32-bit LPDDR memory system.

6.4.2.1.3 PCB Stackup

The minimum stackup required for routing the DM37x is a six layer stack as shown in Table 6-14. Additional layers may be added to the PCB stack up to accommodate other circuitry or to reduce the size of the PCB footprint.

Table 6-14. DM37x Minimum PCB Stack Up

LAYER	TYPE	DESCRIPTION
1	Signal	Top Routing Mostly Horizontal
2	Plane	Ground
3	Plane	Power
4	Signal	Internal Routing
5	Plane	Ground
6	Signal	Bottom Routing Mostly Vertical

Table 6-15. PCB Stack Up Specifications (4)

NO.	PARAMETER	MIN	TYP	MAX	UNIT	NOTES
1	PCB Routing/Plane Layers	6				
2	Signal Routing Layers	3				
3	Full ground layers under LPDDR routing region	2				
4	Number of ground plane cuts allowed within LPDDR routing region			0		
5	Number of ground reference planes required for each LPDDR routing 1 layer	1				
6	Number of layers between LPDDR routing layer and reference ground 0 plane			0		
7	PCB Routing Feature Size		4		Mils	
8	PCB Trace Width w		4		Mils	
9	PCB BGA escape via pad size		18		Mils	
10	PCB BGA escape via hole size		8		Mils	
11	Device BGA Pad Size					See Note(1)
12	LPDDR Device BGA Pad Size					See Note(2)
13	Single Ended Impedance, ZO	50		75	Ω	
14	Impedance Control	Z-5	Z	Z + 5	Ω	See Note(3)

(1) See the Flip Chip Ball Grid Array Package (SPRU811) reference guide for device BGA pad size.
(2) See the LPDDR device manufacturer documentation for the LPDDR device BGA pad size.
(3) Z is the nominal singled ended impedance selected for the PCB specified by item 12.
(4) Specific routing guidelines for the CUS package can be found in the AM37x CUS Routing Guidelines (SPRABD4) application note.

6.4.2.2 Placement

Figure 6-19 shows the required placement for the DM37x device as well as the LPDDR devices. The dimensions for Figure 6-19 are defined in Table 6-16. The placement does not restrict the side of the PCB that the devices are mounted on. The ultimate purpose of the placement is to limit the maximum trace lengths and allow for proper routing space. For 1x16 and 1x32 LPDDR memory systems, the second LPDDR device is omitted from the placement.

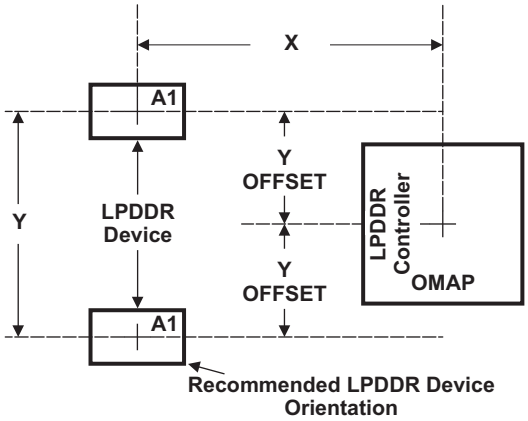

Figure 6-19. DM37xx and LPDDR Device Placement

Table 6-16. Placement Specifications

NO.	PARAMETER	MIN	MAX	UNIT	NOTES
1	X		1440	Mils	See Notes(1), (2)
2	Y		1030	Mils	See Notes(1), (2)
3	Y Offset		525	Mils	See Notes(1),(2),(3)
4	LPDDR Keepout Region				See Note(4)
5	Clearance from non-LPDDR signal to LPDDR Keepout Region	4		w	See Note(5)

(1) See Figure 6-17 for dimension definitions.

(2) Measurements from center of device to center of LPDDR device.

(3) For 16 bit memory systems it is recommended that Y Offset be as small as possible.

(4) LPDDR keepout region to encompass entire LPDDR routing area.

(5) Non-LPDDR signals allowed within LPDDR keepout region provided they are separated from LPDDR routing layers by a ground plane.

6.4.2.3 LPDDR Keep Out Region

The region of the PCB used for the LPDDR circuitry must be isolated from other signals. The LPDDR keep out region is defined for this purpose and is shown in Figure 6-20. The size of this region varies with the placement and LPDDR routing. Additional clearances required for the keep out region are shown in Table 6-16.

 Copyright © 2010–2011, Texas Instruments Incorporated

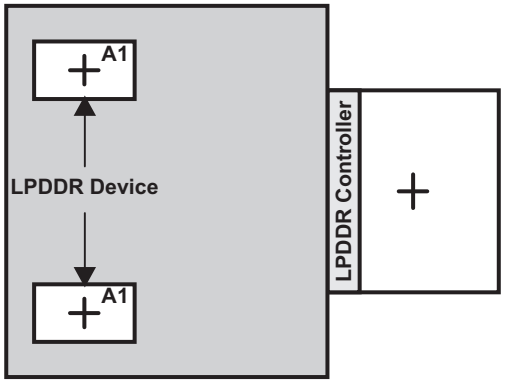

Region should encompass all LPDDR circuitry and varies depending on placement. Non-LPDDR signals should not be routed on the LPDDR signal layers within the LPDDR keep out region. Non-LPDDR signals may be routed in the region provided they are routed on layers separated from LPDDR signal layers by a ground layer. No breaks should be allowed in the reference ground layers in this region. In addition, the 1.8 V power plane should cover the entire keep out region.

Figure 6-20. LPDDR Keepout Region

6.4.2.4 Net Classes

Table 6-17 lists the clock net classes for the LPDDR interface. Table 6-18 lists the signal net classes, and associated clock net classes, for the signals in the LPDDR interface. These net classes are used for the termination and routing rules that follow.

Table 6-17. Clock Net Class Definitions

CLOCK NET CLASS	PIN NAMES
CK	sdrc_clk/sdrc_nclk
DQS0	sdrc_dqs0
DQS1	sdrc_dqs1
DQS2	sdrc_dqs2
DQS3	sdrc_dqs3

Table 6-18. Signal Net Class Definitions

CLOCK NET CLASS	ASSOCIATED CLOCK NET CLASS	PIN NAMES
ADDR_CTRL	CK	sdrc_ba[1:0], sdrc_a[14:0], sdrc_ncs[1:0], sdrc_ncas, sdrc_nras, sdrc_nwe, sdrc_cke[1:0]
DQ0	DQS0	sdrc_d[7:0], sdrc_dm0
DQ1	DQS1	sdrc_d[15:8], sdrc_dm1
DQ2	DQS2	sdrc_d[23:16], sdrc_dm2
DQ3	DQS3	sdrc_d[31:24], sdrc_dm3

6.4.2.5 LPDDR Signal Termination

No terminations of any kind are required in order to meet signal integrity and overshoot requirements. Serial terminators are permitted, if desired, to reduce EMI risk; however, serial terminations are the only type permitted. Table 6-19 shows the specifications for the series terminators.

Table 6-19. LPDDR Signal Terminations

NO.	PARAMETER	MIN	TYP	MAX	UNIT	NOTES
1	CK Net Class	0		10	Ω	See Note(1)
2	ADDR_CTRL Net Class	0	22	Zo	Ω	See Notes(1),(2),(3)
3	Data Byte Net Classes (DQS0-DQS3, DQ0-DQ3)	0	22	Zo	Ω	See Notes(1),(2),(3)

(1) Only series termination is permitted, parallel or SST specifically disallowed.

(2) Terminator values larger than typical only recommended to address EMI issues.

(3) Termination value should be uniform across net class.

6.4.2.6 LPDDR CK and ADDR_CTRL Routing

Figure 6-21 shows the topology of the routing for the CK and ADDR_CTRL net classes. The route is a balanced T as it is intended that the length of segments B and C be equal. In addition, the length of A should be maximized.

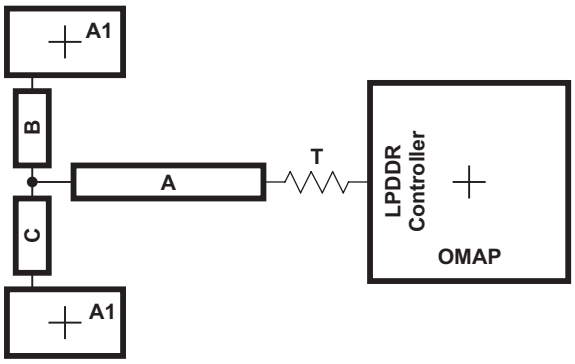

Figure 6-21. CK and ADDR_CTRL Routing and Topology

Table 6-20. CK and ADDR_CTRL Routing Specification (5)

NO.	PARAMETER	MIN	TYP	MAX	UNIT	NOTES
1	Center to Center CK-CK spacing			2w		
2	CK Differential Pair Skew Length Mismatch(4)			25	Mils	See Note(1)
3	CK B to C Skew Length Mismatch			25	Mils	
4	Center to Center CK to other LPDDR trace spacing	4w				See Note(2)
5	CK/ADDR_CTRL nominal trace length	CACLM-50	CACLM	CACLM+50	Mils	See Note(3)
6	ADDR_CTRL to CK Skew Length Mismatch			100	Mils	
7	ADDR_CTRL to ADDR_CTRL Skew Length Mismatch			100	Mils	
8	Center to Center ADDR_CTRL to other LPDDR trace spacing	4w				See Note(2)
9	Center to Center ADDR_CTRL to other ADDR_CTRL trace spacing	3w				See Note(2)
10	ADDR_CTRL A to B, ADDR_CTRL A to C Skew Length Mismatch			100	Mils	See Note(1)
11	ADDR_CTRL B to C Skew Length Mismatch			100	Mils	

(1) Series terminator, if used, should be located closest to DM37x.

(2) Center to center spacing is allowed to fall to minimum (w) for up to 500 mils of routed length to accommodate BGA escape and routing congestion.

(3) CACLM is the longest Manhattan distance of the CK and ADDR_CTRL net classes.

(4) Differential impedance should be 100 ohms.

(5) Specific routing guidelines for the CUS package can be found in the AM37x CUS Routing Guidelines (SPRABD4) application note.

Copyright © 2010–2011, Texas Instruments Incorporated

Figure 6-22 shows the topology and routing for the DQS and DQ net classes; the routes are point to point. Skew matching across bytes is not needed nor recommended.

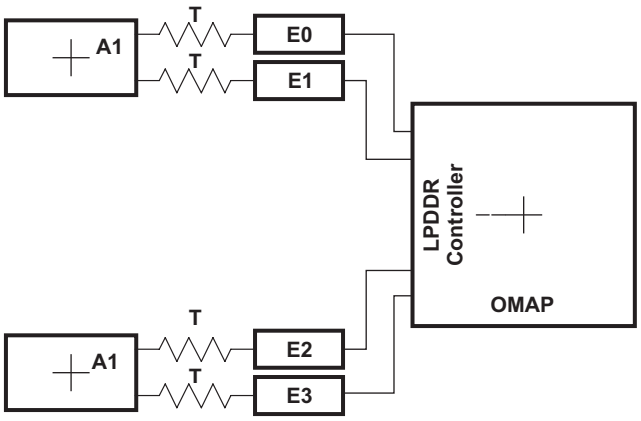

Figure 6-22. DQS and DQ Routing and Topology

Table 6-21. DQS and DQ Routing Specification(1) (6)

PARAMETER	MIN	TYP	MAX	UNIT	NOTES
DQS E Skew Length Mismatch			25	Mils	
Center to Center DQS to other LPDDR trace spacing	4w				See Note(2)
DQS/DQ nominal trace length	DQLM - 50	DQLM	DQLM + 50	Mils	See Note(2)
DQ to DQS Skew Length Mismatch			100	Mils	See Note (4)
DQ to DQ Skew Length Mismatch			100	Mils	See Note (4)
Center to Center DQ to other LPDDR trace spacing	4w				See Note(5)
Center to Center DQ to other DQ trace spacing	3w				See Note(2),(3)
DQ E Skew Length Mismatch			100	Mils	

(1) Series terminator, if used, should be located closest to LPDDR.

(2) Center to center spacing is allowed to fall to minimum (w) for up to 500 mils of routed length to accommodate BGA escape and routing congestion.

(3) DQLM is the longest Manhattan distance of the DQS and DQ net classes.

(4) There is no need, and it is not recommended, to skew match across data bytes. This specification is only relative within a data byte.

(5) DQs from other bytes are considered *other* LPDDR traces.

(6) Specific routing guidelines for the CUS package can be found in the AM37x CUS Routing Guidelines (SPRABD4) application note.

6.5 Multimedia Interfaces

6.5.1 Camera ISP2P Interface

NOTE

For more information, see Camera ISP chapter of the *AM/DM37x Multimedia Device Technical Reference Manual* (literature number SPRUGN4).

The camera subsystem provides the system interfaces and the processing capability to connect raw, YUV or JPEG image sensor modules to the device for video-preview, video-record and still-image-capture applications.

The camera ISP2P subsystem supports up to two simultaneous pixel flows but only one of them can use the video processing hardware:

- Parallel camera interface + Serial camera interface: one interface data goes through the video processing hardware. The other interface data goes directly to memory
- Serial camera interface + Serial camera interface: one serial interface data goes through the video processing hardware. The other serial interface data goes directly to memory.

The camera ISP2P subsystem supports different camera configurations:

- 10-bit Parallel interface
- 12-bit Parallel interface
- 12-bit Parallel interface

Note: For more information, see the Camera ISP / Camera ISP Environment / Camera ISP Connectivity Schemes section of the *AM/DM37x Multimedia Device Technical Reference Manual* (literature number SPRUGN4).

6.5.1.1 Camera Output Clocks (cam_xclka and cam_xclkb)

Table 6-22. ISP2P cam_xclka and cam_xclkb Output Clocks Switching Characteristics

NO.	PARAMETER		OPP100		OPP50		UNIT
			MIN	MAX	MIN	MAX	
ISP15	$1 / t_{c(xclk)}$	Frequency(1), output clock cam_xclkn(4)		216		216	MHz
ISP16	$t_{w(xclkH)}$	Typical pulse duration, output clock cam_xclkn(4) high	0.5P(2)		0.5P(2)		ns
ISP16	$t_{w(xclkL)}$	Typical pulse duration, output clock cam_xclkn(4) low	0.5P(2)		0.5P(2)		ns
	$t_{dc(xclk)}$	Duty cycle error, output clock cam_xclkn(4)		0.5 * P(2) - 2.083		0.5 * P(2) - 2.083	ps
	$t_{J(xclk)}$	Cycle jitter(3), output clock cam_xclkn(4)		0.044 * P(2)		0.044 * P(2)	ps
	$t_{R(xclk)}$	Rise time, output clock cam_xclkn(4)		0.93		0.93	ns
	$t_{F(xclk)}$	Fall time, output clock cam_xclkn(4)		0.93		0.93	ns

(1) Related with the cam_xclkn(4) maximum and minimum frequencies programmable in the ISP module.
NOTE: You must disable the camera sensor or the camera module to change the frequency configuration. For more information, see the *AM/DM37x Multimedia Device Technical Reference Manual* (literature number SPRUGN4).

(2) P = cam_xclkn(4) period in ns

(3) Maximum cycle jitter supported by cam_xclka and cam_xclkb output clocks.

(4) In cam_xclkn, n is equal to a or b.

Copyright © 2010–2011, Texas Instruments Incorporated

6.5.1.2 Parallel Camera Interface (CPI)

6.5.1.2.1 CPI—Video and Graphics Digitizer 1.8V Mode

The imaging subsystem deals with the processing of the pixel data coming from an external image sensor or from video and graphics digitizer. It is a key component for the following multimedia applications: video preview, camera viewfinder, video record and still image capture. It supports RAW, RGB, and YUV data processing.

Table 6-24 assumes testing over the recommended operating conditions and electrical characteristic conditions below (see Figure 6-23 and Figure 6-24).

Table 6-23. CPI Timing Conditions—Video and Graphics Digitizer 1.8-V Mode

TIMING CONDITION PARAMETER		VALUE		UNIT
		MIN	MAX	
Input Conditions				
t_R	Input signal rise time	80	1800	ps
t_F	Input signal fall time	80	1800	ps

Table 6-24. CPI Timing Requirements—Video and Graphics Digitizer 1.8-V Mode(4) (6)

NO.	PARAMETER		OPP100		UNIT
			MIN	MAX	
ISP1	$1 / t_{c(pclk)}$	Frequency(1), input pixel clock cam_pclk		148.5	MHz
ISP2	$t_{w(pclkL)}$	Typical pulse duration, input pixel clock cam_pclk low	0.5P(2)		ns
ISP3	$t_{w(pclkH)}$	Typical pulse duration, input pixel clock cam_pclk high	0.5P(2)		ns
	$t_{dc(pclk)}$	Duty cycle error, input pixel clock cam_pclk		0.5*P(2) - 3.247	ns
	$t_{J(pclk)}$	Cycle jitter(3), input pixel clock cam_pclk		0.06P(2)	ns
ISP4	$t_{su(vsV-pclkH)}$	Setup time, input vertical synchronization cam_vs valid before input pixel clock cam_pclk rising/falling edge	0.75		ns
ISP5	$t_{h(pclkH-vsV)}$	Hold time, input vertical synchronization cam_vs valid after input pixel clock cam_pclk rising/falling edge	0.96		ns
ISP6	$t_{su(hsV-pclkH)}$	Setup time, input horizontal synchronization cam_hs valid before input pixel clock cam_pclk rising/falling edge	0.75		ns
ISP7	$t_{h(pclkH-hsV)}$	Hold time, input horizontal synchronization cam_hs valid after input pixel clock cam_pclk rising/falling edge	0.96		ns
ISP8	$t_{su(dV-pclkH)}$	Setup time, input data cam_d[n:0](5) valid before input pixel clock cam_pclk rising/falling edge	0.75		ns
ISP9	$t_{h(pclkH-dV)}$	Hold time, input data cam_d[n:0](5) valid after input pixel clock cam_pclk rising/falling edge	0.96		ns
ISP10	$t_{su(wenV-pclkH)}$	Setup time, input write enable cam_wen valid before input pixel clock cam_pclk rising/falling edge	0.75		ns
ISP11	$t_{h(pclkH-wenV)}$	Hold time, input write enable cam_wen valid after input pixel clock cam_pclk rising/falling edge	0.96		ns
ISP12	$t_{su(fldV-pclkH)}$	Setup time, input field identification cam_fld valid before input pixel clock cam_pclk rising/falling edge	0.75		ns
ISP13	$t_{h(pclkH-fldV)}$	Hold time, input field identification cam_fld valid after input pixel clock cam_pclk rising/falling edge	0.96		ns

(1) Related with the input maximum frequency supported by the ISP module in 8-bit mode with 8 to 16 data bits conversion bridge enabled.

(2) P = cam_pclk period in ns

(3) Maximum cycle jitter supported by cam_pclk input clock

(4) The timing requirements are assured up to the cycle jitter and duty cycle error conditions specified.

(5) n = 11 (Data bus size is limited to 8 bits. So the bits configuration is either cam_d[7:0] or cam_d[11:4]). Lines not connected must be tied low.

(6) See Section 4.3.4, *Processor Clocks*.

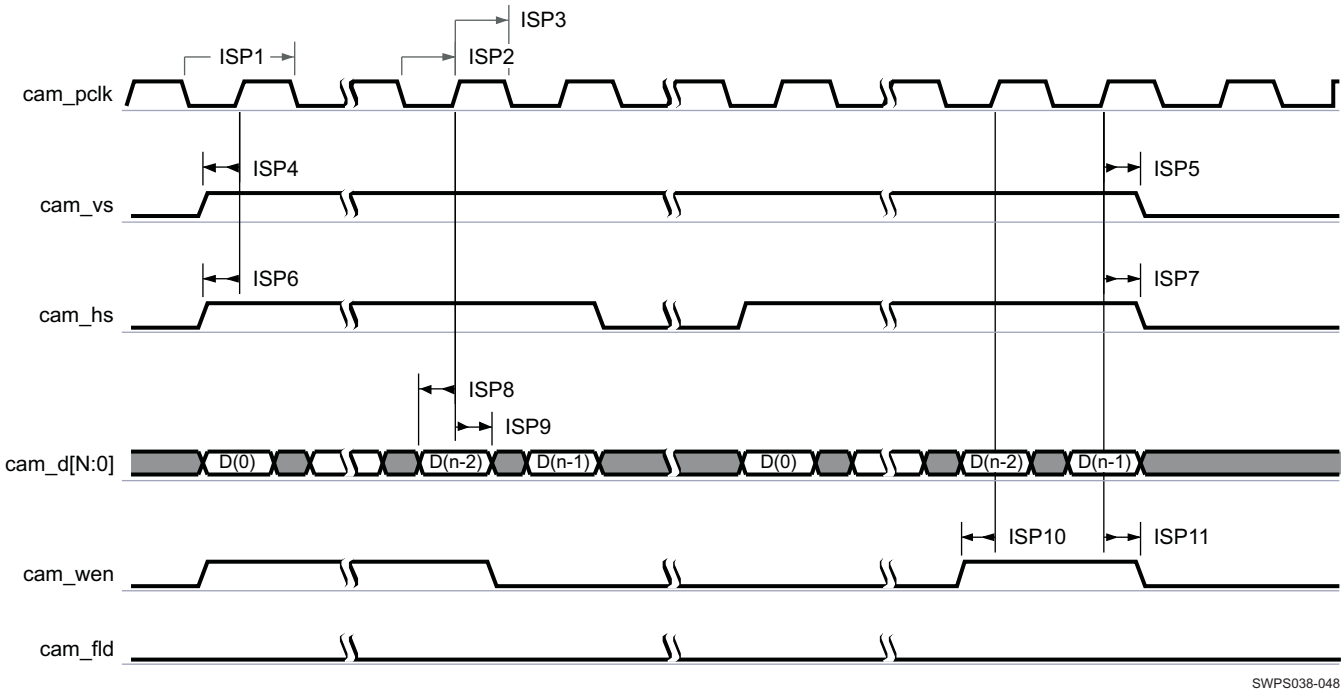

(1) The polarity of cam_pclk, cam_fld, cam_vs, and cam_hs are software configurable. Optionally, the cam_wen signal can be used as an external memory write-enable signal. For further details, see the *AM/DM37x Multimedia Device Technical Reference Manual* (literature number SPRUGN4).

(2) N = 11 (Data bus size is limited to 8 bits. So the bits configuration is either cam_d[7:0] or cam_d[11:4]). When the number of data lines is less than cam_d[N:0], data lines can be connected to the upper or lower lines of cam_d[N:0]. Lines not connected must be tied low. For more information about video port mapping, see the *AM/DM37x Multimedia Device Technical Reference Manual* (literature number SPRUGN4).

Figure 6-23. CPI—Video and Graphics Digitizer—1.8-V Progressive Mode

Copyright © 2010–2011, Texas Instruments Incorporated

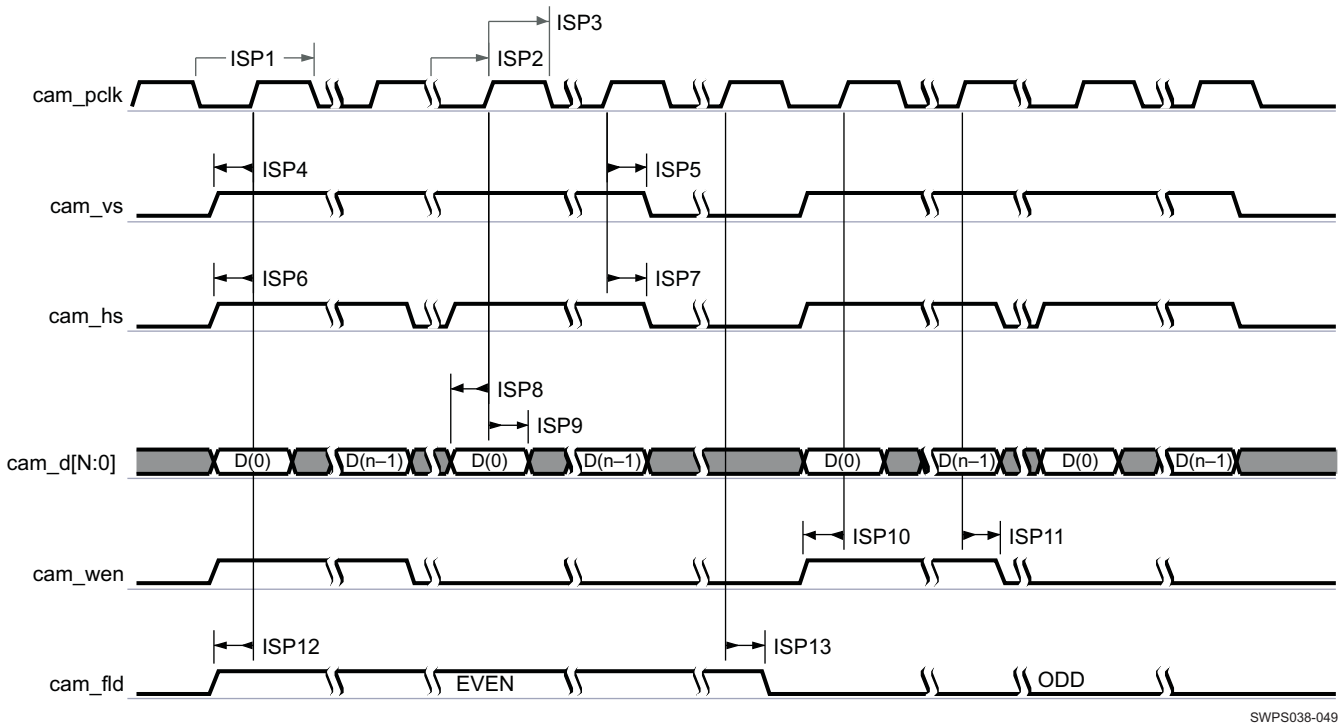

(1) The polarity of cam_pclk, cam_fld, cam_vs, and cam_hs are software configurable. Optionally, the cam_wen signal can be used as an external memory write-enable signal. For further details, see the *AM/DM37x Multimedia Device Technical Reference Manual* (literature number SPRUGN4).

(2) N = 11 (Data bus size is limited to 8 bits. So the bits configuration is either cam_d[7:0] or cam_d[11:4]). When the number of data lines is less than cam_d[N:0], data lines can be connected to the upper or lower lines of cam_d[N:0]. Lines not connected must be tied low. For more information about video port mapping, see the *AM/DM37x Multimedia Device Technical Reference Manual* (literature number SPRUGN4).

Figure 6-24. CPI—Video and Graphics Digitizer—1.8-V Interlaced Mode

6.5.1.2.2 CPI—12-Bit SYNC Normal Progressive Mode

Table 6-26 assumes testing over the recommended operating conditions and electrical characteristic conditions below (see Figure 6-25).

Table 6-25. CPI Timing Conditions—12-Bit SYNC Normal Progressive Mode(1)

TIMING CONDITION PARAMETER		VALUE	UNIT
Input Conditions			
t_R	Input signal rise time	2.7	ns
t_F	Input signal fall time	2.7	ns
Output Condition			
C_{LOAD}	Output load capacitance	8.6	pF

(1) The load setting of the IO buffer: LB0 = 1.

Table 6-26. CPI Timing Requirements—12-Bit SYNC Normal Progressive Mode[4] [5]

NO.	PARAMETER		OPP100		OPP50		UNIT
			MIN	MAX	MIN	MAX	
ISP17	1 / $t_{c(pclk)}$	Frequency[1], input pixel clock cam_pclk		75		45	MHz
ISP18	$t_{w(pclkH)}$	Typical pulse duration, input pixel clock cam_pclk high	0.5P[2]		0.5P[2]		ns
ISP18	$t_{w(pclkL)}$	Typical pulse duration, input pixel clock cam_pclk low	0.5P[2]		0.5P[2]		ns
	$t_{dc(pclk)}$	Duty cycle error, input pixel clock cam_pclk		0.5P[2] - 3.465		0.5P[2] - 6.93	ns
	$t_{J(pclk)}$	Cycle jitter[3], input pixel clock cam_pclk		0.0649*P[2]		0.0649*P[2]	ns
ISP19	$t_{su(dV-pclkH)}$	Setup time, input data cam_d[11:0] valid before input pixel clock cam_pclk rising edge	1.82		3.25		ns
ISP20	$t_{h(pclkH-dV)}$	Hold time, input data cam_d[11:0] valid after input pixel clock cam_pclk rising edge	1.82		3.25		ns
ISP21	$t_{su(dV-vsH)}$	Setup time, input vertical synchronization cam_vs valid before input pixel clock cam_pclk rising edge	1.82		3.25		ns
ISP22	$t_{h(pclkH-vsV)}$	Hold time, input vertical synchronization cam_vs valid after input pixel clock cam_pclk rising edge	1.82		3.25		ns
ISP23	$t_{su(dV-hsH)}$	Setup time, input horizontal synchronization cam_hs valid before input pixel clock cam_pclk rising edge	1.82		3.25		ns
ISP24	$t_{h(pclkH-hsV)}$	Hold time, input horizontal synchronization cam_hs valid after input pixel clock cam_pclk rising edge	1.82		3.25		ns
ISP25	$t_{su(dV-hsH)}$	Setup time, input write enable cam_wen valid before input pixel clock cam_pclk rising edge	1.82		3.25		ns
ISP26	$t_{h(pclkH-hsV)}$	Hold time, input write enable cam_wen valid after input pixel clock cam_pclk rising edge	1.82		3.25		ns

(1) Related with the input maximum frequency supported by the ISP module.

(2) P = cam_pclk period in ns

(3) Maximum cycle jitter supported by cam_pclk input clock.

(4) The timing requirements are assured up to the cycle jitter and duty cycle error conditions specified.

(5) See Section 4.3.4, *Processor Clocks*.

Copyright © 2010–2011, Texas Instruments Incorporated

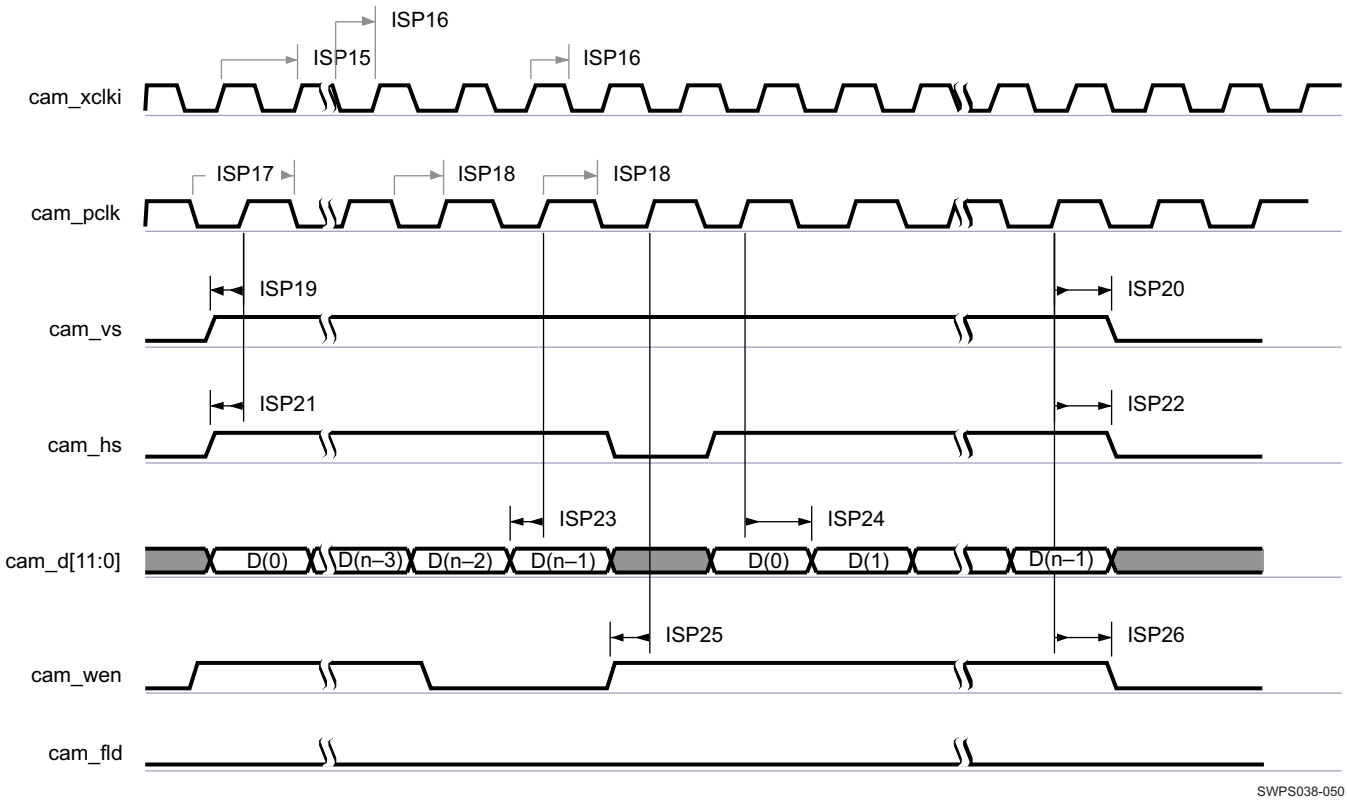

(1) The polarity of cam_pclk, cam_fld, cam_vs, and cam_hs are configurable. If the cam_hs, cam_vs, and cam_fld signals are output, the signal length can be set.
(2) The parallel camera in SYNC mode supports progressive image sensor modules and 8-, 10-, 11-, or 12-bit data.
(3) When the image sensor has fewer than 12 data lines, it must be connected to the lower data lines and the unused lines must be grounded.
(4) However, it is possible to shift the data to 0, 2, or 4 data internal lanes.
(5) The bit configurations are: cam_d[11:4] or cam_d[7:0] in 8-bit mode, cam_d[11:2] or cam_d[9:0] in 10-bit mode, cam_d[10:0] in 11-bit mode and cam_d[11:0] in 12-bit mode.
(6) Optionally, the data write to memory can be qualified by the external cam_wen signal.
(7) The cam_wen signal can be used as an external memory write-enable signal. The data is stored to memory only if cam_hs, cam_vs, and cam_wen signals are asserted.
(8) In cam_xclki, i can be equal to a or b. See Table 6-22 for ISP15 and ISP16 parameters.

Figure 6-25. CPI—12-Bit SYNC Normal Progressive Mode

6.5.1.2.3 CPI—8-Bit SYNC Packed Progressive Mode

Table 6-28 assumes testing over the recommended operating conditions and electrical characteristic conditions below (see Figure 6-26).

Table 6-27. CPI Timing Conditions—8-Bit SYNC Packed Progressive Mode[(1)]

TIMING CONDITION PARAMETER		VALUE	UNIT
Input Conditions			
t_R	Input signal rise time	2.5	ns
t_F	Input signal fall time	2.5	ns
Output Condition			
C_{LOAD}	Output load capacitance	8.6	pF

(1) The load setting of the IO buffer: LB0 = 1.

Table 6-28. CPI Timing Requirements—8-Bit SYNC Packed Progressive Mode[(4) (5)]

NO.	PARAMETER		OPP100		OPP50		UNIT
			MIN	MAX	MIN	MAX	
ISP3	1 / $t_{c(pclk)}$	Frequency [(1)], input pixel clock cam_pclk		130		65	MHz
ISP4	$t_{w(pclkH)}$	Typical pulse duration, input pixel clock cam_pclk high	0.5*P[(2)]		0.5*P[(2)]		ns
ISP4	$t_{w(pclkL)}$	Typical pulse duration, input pixel clock cam_pclk low	0.5*P[(2)]		0.5*P[(2)]		ns
	$t_{dc(pclk)}$	Duty cycle error, input pixel clock cam_pclk		0.5*P[(2)] - 3.465		0.5*P[(2)] - 6.93	ns
	$t_{J(pclk)}$	Cycle jitter[(3)], input pixel clock cam_pclk		0.0649*P[(2)]		0.0649*P[(2)]	ns
ISP5	$t_{su(dV-pclkH)}$	Setup time, input data cam_d[7:0] valid before input pixel clock cam_pclk rising edge	1.08		2.27		ns
ISP6	$t_{h(pclkH-dV)}$	Hold time, input data cam_d[7:0] valid after input pixel clock cam_pclk rising edge	1.08		2.27		ns
ISP7	$t_{su(dV-vsH)}$	Setup time, input vertical synchronization cam_vs valid before input pixel clock cam_pclk rising edge	1.08		2.27		ns
ISP8	$t_{h(pclkH-vsV)}$	Hold time, input vertical synchronization cam_vs valid after input pixel clock cam_pclk rising edge	1.08		2.27		ns
ISP9	$t_{su(dV-hsH)}$	Setup time, input horizontal synchronization cam_hs valid before input pixel clock cam_pclk rising edge	1.08		2.27		ns
ISP10	$t_{h(pclkH-hsV)}$	Hold time, input horizontal synchronization cam_hs valid after input pixel clock cam_pclk rising edge	1.08		2.27		ns
ISP11	$t_{su(dV-hsH)}$	Setup time, input write enable cam_wen valid before input pixel clock cam_pclk rising edge	1.08		2.27		ns
ISP12	$t_{h(pclkH-hsV)}$	Hold time, input write enable cam_wen valid after input pixel clock cam_pclk rising edge	1.08		2.27		ns

(1) Related with the input maximum frequency supported by the ISP module.

(2) P = cam_pclk period in ns

(3) Maximum cycle jitter supported by cam_pclk input clock.

(4) The timing requirements are assured up to the cycle jitter and duty cycle error conditions specified.

(5) See Section 4.3.4, *Processor Clocks*.

Copyright © 2010–2011, Texas Instruments Incorporated

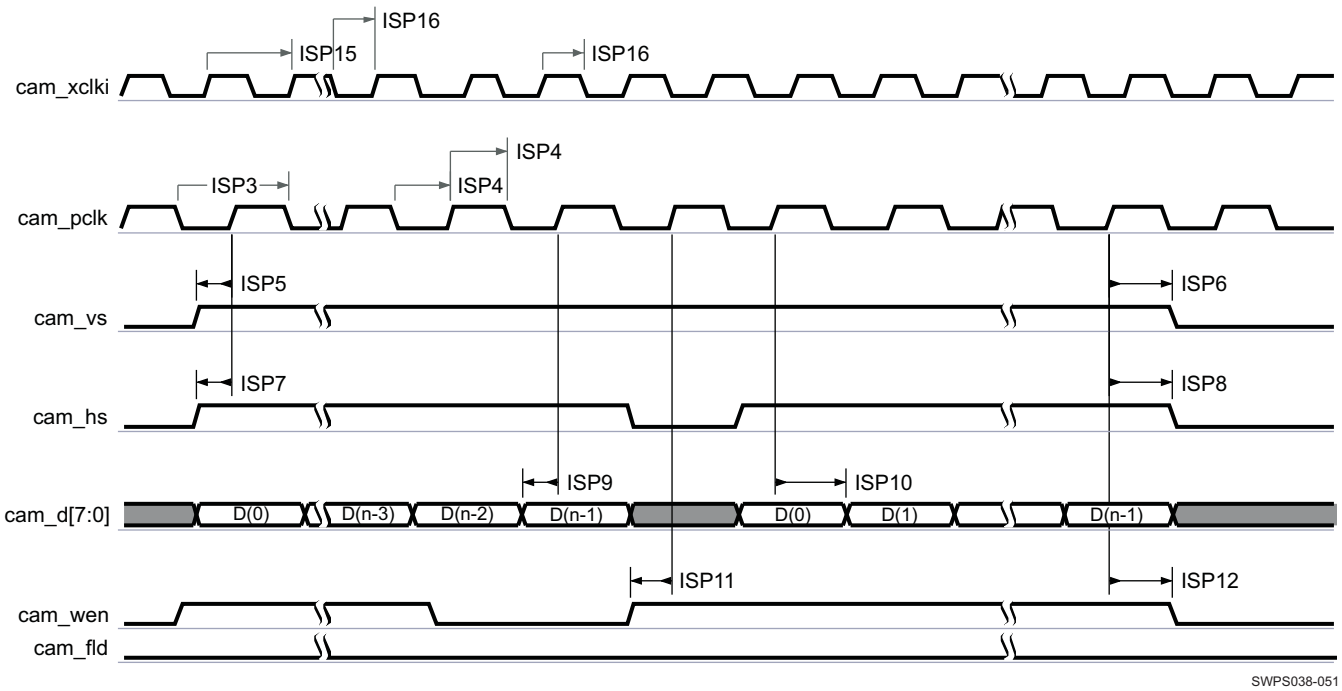

(1) The polarity of cam_pclk, cam_fld, cam_vs, and cam_hs are configurable.
(2) The image sensor is connected to the lower data lines and the unused lines are grounded. However, it is possible to shift the data to 0, 2, or 4 data internal lanes. The bit configurations are: cam_d[11:4] or cam_d[7:0] in 8-bit packed mode.
(3) Optionally, the data write to memory can be qualified by the external cam_wen signal. The cam_wen signal can be used as a external memory write-enable signal. The data is stored to memory only if cam_hs, cam_vs, and cam_wen signals are asserted. The polarity of cam_fld is programmable.
(4) The camera module can pack 8-bit data into 16 bits. It doubles the maximum pixel clock. This mode can be particularly useful to transfer an YCbCr data stream or compressed stream to memory at very high speed.
(5) In cam_xclki, i can be equal to a or b. See Table 6-22 for ISP15 and ISP16 parameters.

Figure 6-26. CPI—8-Bit SYNC Packed Progressive Mode

6.5.1.2.4 CPI—12-Bit SYNC Normal Interlaced Mode

Table 6-30 assumes testing over the recommended operating conditions and electrical characteristic conditions below (see Figure 6-27).

Table 6-29. CPI Timing Conditions—12-Bit SYNC Normal Interlaced Mode

TIMING CONDITION PARAMETER		VALUE	UNIT
Input Conditions			
t_R	Input signal rise time	2.7	ns
t_F	Input signal fall time	2.7	ns
Output Condition			
C_{LOAD}	Output load capacitance[(1)]	8.6	pF

(1) The load setting of the IO buffer: LB0 = 1.

Table 6-30. CPI Timing Requirements—12-Bit SYNC Normal Interlaced Mode[4] [5]

NO.	PARAMETER		OPP100		OPP50		UNIT
			MIN	MAX	MIN	MAX	
ISP17	$1 / t_{c(pclk)}$	Frequency[1], input pixel clock cam_pclk		75		45	MHz
ISP18	$t_{w(pclkH)}$	Typical pulse duration, input pixel clock cam_pclk high	0.5P[2]		0.5P[2]		ns
ISP18	$t_{w(pclkL)}$	Typical pulse duration, input pixel clock cam_pclk low	0.5P[2]		0.5P[2]		ns
	$t_{dc(pclk)}$	Duty cycle error, input pixel clock cam_pclk		0.5*P[2] - 3.465		0.5*P[2] - 6.93	ns
	$t_{J(pclk)}$	Cycle jitter[3], input pixel clock cam_pclk		0.0649*P[2]		0.0649*P[2]	ns
ISP19	$t_{su(dV-pclkH)}$	Setup time, input data cam_d[11:0] valid before input pixel clock cam_pclk rising edge	1.82		3.25		ns
ISP20	$t_{h(pclkH-dV)}$	Hold time, input data cam_d[11:0] valid after input pixel clock cam_pclk rising edge	1.82		3.25		ns
ISP21	$t_{su(dV-vsH)}$	Setup time, input vertical synchronization cam_vs valid before input pixel clock cam_pclk rising edge	1.82		3.25		ns
ISP22	$t_{h(pclkH-vsV)}$	Hold time, input vertical synchronization cam_vs valid after input pixel clock cam_pclk rising edge	1.82		3.25		ns
ISP23	$t_{su(dV-hsH)}$	Setup time, input horizontal synchronization cam_hs valid before input pixel clock cam_pclk rising edge	1.82		3.25		ns
ISP24	$t_{h(pclkH-hsV)}$	Hold time, input horizontal synchronization cam_hs valid after input pixel clock cam_pclk rising edge	1.82		3.25		ns
ISP25	$t_{su(dV-hsH)}$	Setup time, input write enable cam_wen valid before input pixel clock cam_pclk rising edge	1.82		3.25		ns
ISP26	$t_{h(pclkH-hsV)}$	Hold time, input write enable cam_wen valid after input pixel clock cam_pclk rising edge	1.82		3.25		ns
ISP27	$t_{su(dV-fldH)}$	Setup time, input field identification cam_fld valid before input pixel clock cam_pclk rising edge	1.82		3.25		ns
ISP28	$t_{h(pclkH-fldV)}$	Hold time, input field identification cam_fld valid after input pixel clock cam_pclk rising edge	1.82		3.25		ns

(1) Related with the input maximum frequency supported by the ISP module.

(2) P = cam_pclk period in ns

(3) Maximum cycle jitter supported by cam_pclk input clock.

(4) The timing requirements are assured up to the cycle jitter and duty cycle error conditions specified.

(5) See Section 4.3.4, *Processor Clocks*.

Copyright © 2010–2011, Texas Instruments Incorporated

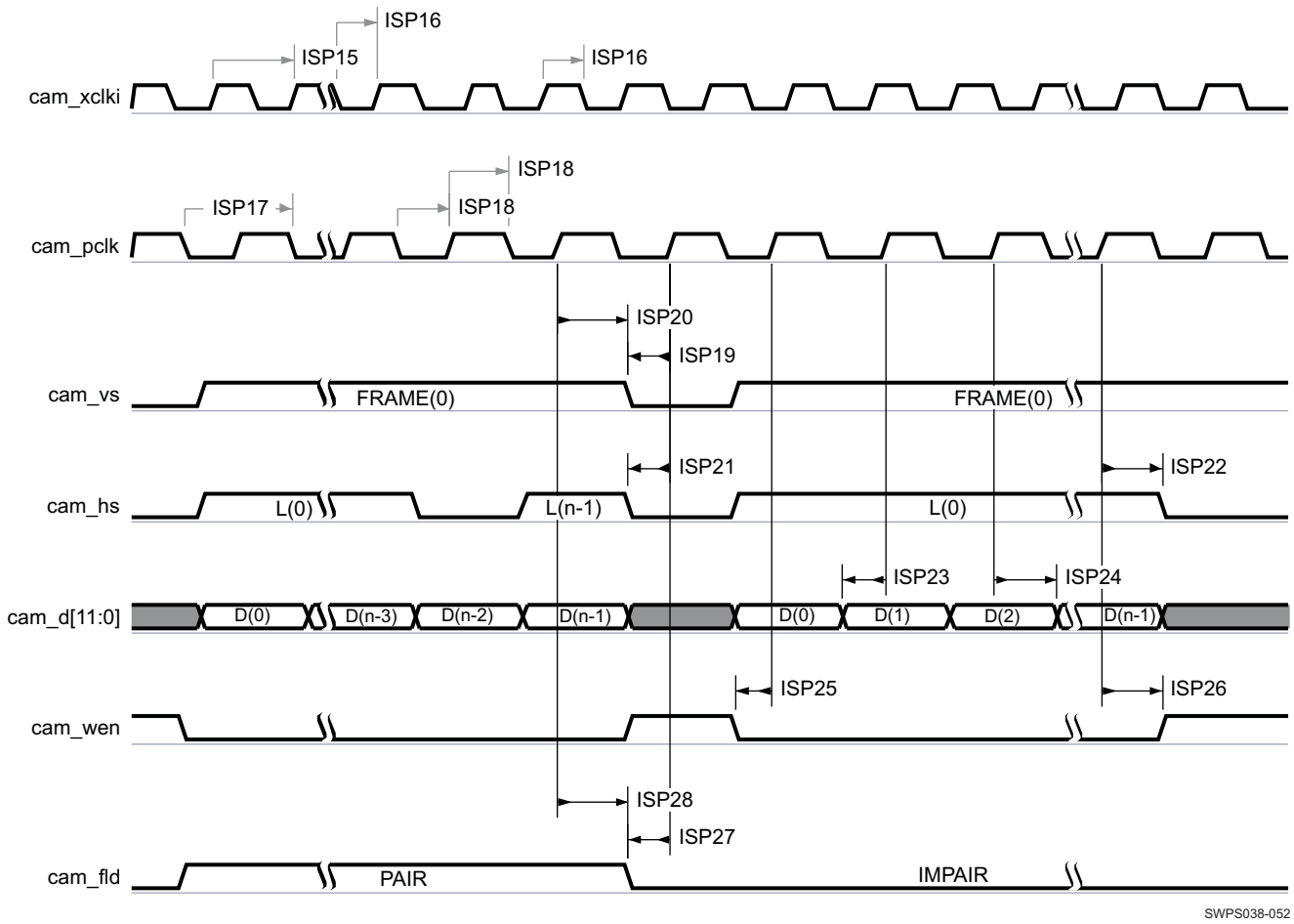

(1) The polarity of cam_pclk, cam_fld, cam_vs, and cam_hs are configurable. If the cam_hs, cam_vs, and cam_fld signals are output, the signal length can be set.
(2) The parallel camera in SYNC mode supports interlaced image sensor modules and 8-, 10-, 11-, or 12-bit data.
(3) When the image sensor has fewer than 12 data lines, it is connected to the lower data lines and the unused lines are grounded.
(4) It is possible to shift the data to 0, 2, or 4 data internal lanes.
(5) The bit configurations are: cam_d[11:4] or cam_d[7:0] in 8-bit mode, cam_d[11:2] or cam_d[9:0] in 10-bit mode, cam_d[10:0] in 11-bit mode and cam_d[11:0] in 12-bit mode.
(6) Optionally, the data write to memory can be qualified by the external cam_wen signal.
(7) The cam_wen signal can be used as an external memory write-enable signal. The data is stored to memory only if cam_hs, cam_vs, and cam_wen signals are asserted.
(8) In cam_xclki, i can be equal to a or b. See Table 6-22 for ISP15 and ISP16 parameters.

Figure 6-27. CPI—12-bit SYNC Normal Interlaced ModeSection 5.3

6.5.1.2.5 CPI—8-Bit SYNC Packed Interlaced Mode

Table 6-32 assumes testing over the recommended operating conditions and electrical characteristic conditions below (see Figure 6-28).

Table 6-31. CPI Timing Conditions—8-Bit SYNC Packed Interlaced Mode

TIMING CONDITION PARAMETER		VALUE	UNIT
Input Conditions			
t_R	Input signal rise time	2.5	ns
t_F	Input signal fall time	2.5	ns
Output Condition			
C_{LOAD}	Output load capacitance(1)	8.6	pF

(1) The load setting of the IO buffer: LB0 = 1.

Table 6-32. CPI Timing Requirements—8-Bit SYNC Packed Interlaced Mode(4) (5)

NO.	PARAMETER		OPP100		OPP50		UNIT
			MIN	MAX	MIN	MAX	
ISP3	$1 / t_{c(pclk)}$	Frequency(1), input pixel clock cam_pclk		130		65	MHz
ISP4	$t_{w(pclkH)}$	Typical pulse duration, input pixel clock cam_pclk high	0.5P(2)		0.5P(2)		ns
ISP4	$t_{w(pclkL)}$	Typical pulse duration, input pixel clock cam_pclk low	0.5P(2)		0.5P(2)		ns
	$t_{dc(pclk)}$	Duty cycle error, input pixel clock cam_pclk		0.5*P(2) - 3.465		0.5*P(2) - 6.93	ns
	$t_{J(pclk)}$	Cycle jitter(3), input pixel clock cam_pclk		0.0649*P (2)		0.0649*P (2)	ns
ISP5	$t_{su(dV-pclkH)}$	Setup time, input data cam_d[8:0] valid before input pixel clock cam_pclk rising edge	1.08		2.27		ns
ISP6	$t_{h(pclkH-dV)}$	Hold time, input data cam_d[8:0] valid after input pixel clock cam_pclk rising edge	1.08		2.27		ns
ISP7	$t_{su(dV-vsH)}$	Setup time, input vertical synchronization cam_vs valid before input pixel clock cam_pclk rising edge	1.08		2.27		ns
ISP8	$t_{h(pclkH-vsV)}$	Hold time, input vertical synchronization cam_vs valid after input pixel clock cam_pclk rising edge	1.08		2.27		ns
ISP9	$t_{su(dV-hsH)}$	Setup time, input horizontal synchronization cam_hs valid before input pixel clock cam_pclk rising edge	1.08		2.27		ns
ISP10	$t_{h(pclkH-hsV)}$	Hold time, input horizontal synchronization cam_hs valid after input pixel clock cam_pclk rising edge	1.08		2.27		ns
ISP11	$t_{su(dV-hsH)}$	Setup time, input write enable cam_wen valid before input pixel clock cam_pclk rising edge	1.08		2.27		ns
ISP12	$t_{h(pclkH-hsV)}$	Hold time, input write enable cam_wen valid after input pixel clock cam_pclk rising edge	1.08		2.27		ns
ISP13	$t_{su(dV-fldH)}$	Setup time, input field identification cam_fld valid before input pixel clock cam_pclk rising edge	1.08		2.27		ns
ISP14	$t_{h(pclkH-fldV)}$	Hold time, input field identification cam_fld valid after input pixel clock cam_pclk rising edge	1.08		2.27		ns

(1) Related with the input maximum frequency supported by the ISP module.

(2) P = cam_pclk period in ns

(3) Maximum cycle jitter supported by cam_pclk input clock.

(4) The timing requirements are assured up to the cycle jitter and duty cycle error conditions specified.

(5) See Section 4.3.4, *Processor Clocks*.

Copyright © 2010–2011, Texas Instruments Incorporated

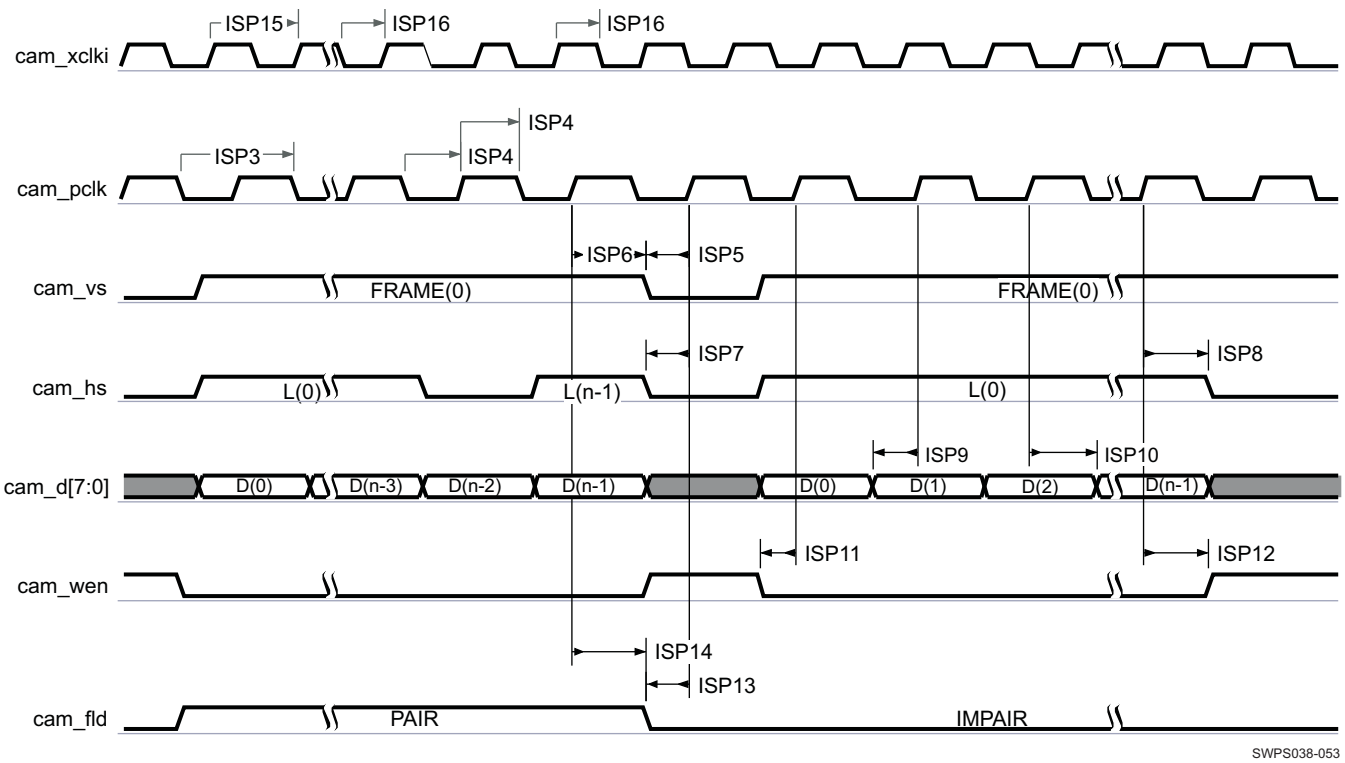

(1) The polarity of cam_pclk, cam_fld, cam_vs, and cam_hs are configurable.
(2) The image sensor is connected to the lower data lines and the unused lines are grounded. However, it is possible to shift the data to 0, 2, or 4 data internal lanes. The bit configurations are: cam_d[11:4] or cam_d[7:0] in 8-bit packed mode .
(3) Optionally, the data write to memory can be qualified by the external cam_wen signal. The cam_wen signal can be used as an external memory write-enable signal. The data is stored to memory only if cam_hs, cam_vs, and cam_wen signals are asserted.
(4) The camera module can pack 8-bit data into 16 bits. It doubles the maximum pixel clock. This mode can be particularly useful to transfer a YCbCr data stream or compressed stream to memory at very high speed.
(5) In cam_xclki, i can be equal to a or b. See Table 6-22 for ISP15 and ISP16 parameters.

Figure 6-28. CPI—8-Bit SYNC Packed Interlaced Mode

6.5.1.2.6 CPI—ITU Mode

Table 6-34 assumes testing over the recommended operating conditions and electrical characteristic conditions below (see Figure 6-29).

Table 6-33. CPI Timing Conditions—ITU Mode

TIMING CONDITION PARAMETER		VALUE	UNIT
Input Conditions			
t_R	Input signal rise time	2.7	ns
t_F	Input signal fall time	2.7	ns
Output Condition			
C_{LOAD}	Output load capacitance(1)	8.6	pF

(1) The load setting of the IO buffer: LB0 = 1.

Table 6-34. CPI Timing Requirements—ITU Mode[(4) (5)]

NO.	PARAMETER		OPP100		OPP50		UNIT
			MIN	MAX	MIN	MAX	
ISP17	$1 / t_{c(pclk)}$	Frequency[(1)], input pixel clock cam_pclk		75		45	MHz
ISP18	$t_{w(pclkH)}$	Typical pulse duration, input pixel clock cam_pclk high	0.5P[(2)]		0.5P[(2)]		ns
ISP18	$t_{w(pclkL)}$	Typical pulse duration, input pixel clock cam_pclk low	0.5P[(2)]		0.5P[(2)]		ns
	$t_{dc(pclk)}$	Duty cycle error, input pixel clock cam_pclk		0.5*P[(2)] - 3.465		0.5*P[(2)] - 6.93	ns
	$t_{J(pclk)}$	Cycle jitter[(3)], input pixel clock cam_pclk		0.0649*P[(2)]		0.0649*P[(2)]	ns
ISP23	$t_{su(dV-pclkH)}$	Setup time, input data cam_d[9:0] valid before input pixel clock cam_pclk rising edge	1.82		3.25		ns
ISP24	$t_{h(pclkH-dV)}$	Hold time, input data cam_d[9:0] valid after input pixel clock cam_pclk rising edge	1.82		3.25		ns

(1) Related with the input maximum frequency supported by the ISP module.
(2) P = cam_pclk period in ns
(3) Maximum cycle jitter supported by cam_pclk input clock.
(4) The timing requirements are assured up to the cycle jitter and duty cycle error conditions specified.
(5) See Section 4.3.4, *Processor Clocks*.

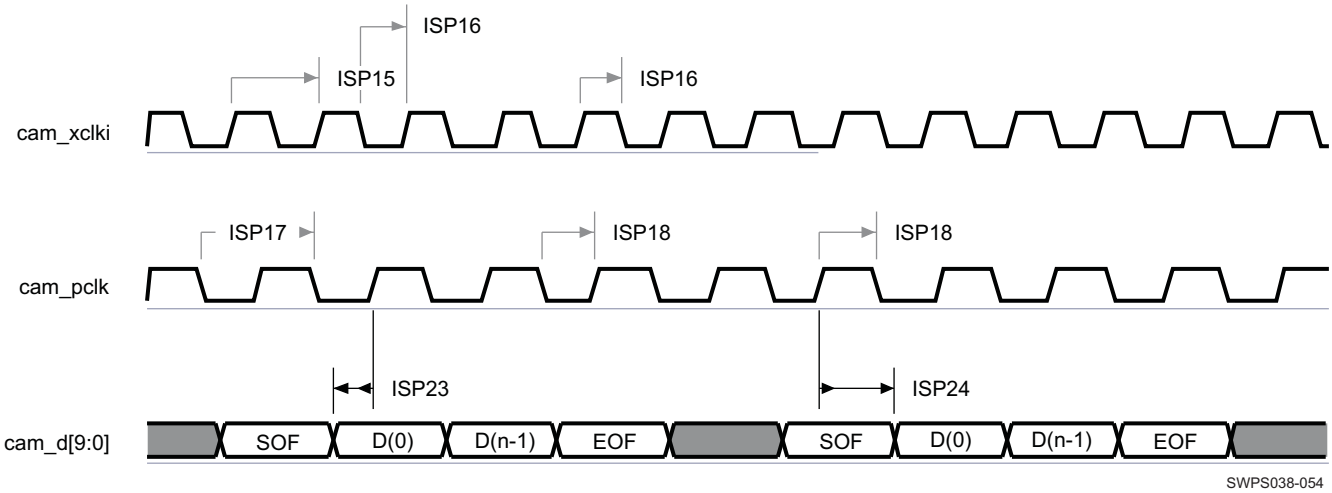

(1) The unused lines are grounded and the data bus is connected to the lower data lines. However, it is possible to shift the data to 0, 2, or 4 data internal lanes. The different configurations are: cam_d[11:4] or cam_d[7:0] in 8-bit mode and cam_d[11:2] or cam_d[9:0] in 10-bit mode.
(2) The parallel camera in ITU mode supports progressive camera modules.
(3) In cam_xclki, i can be equal to a or b. See Table 6-22 for ISP15 and ISP16 parameters.

Figure 6-29. CPI—ITU Mode

Copyright © 2010–2011, Texas Instruments Incorporated

6.5.2 Display Subsystem (DSS)

NOTE

For more information, see Display Subsystem chapter of the *AM/DM37x Multimedia Device Technical Reference Manual* (literature number SPRUGN4).

The display subsystem (DSS) provides the logic to display the video frame from external (SDRAM) or internal (SRAM) memory on an LCD panel or a TV set. The display subsystem integrates the following elements:

- Display controller (DISPC) module
- Remote frame buffer interface (RFBI) module
- NTSC/PAL video encoder
- LCD display with:
  - Parallel Interface

The two display supports can be active at the same time.

6.5.2.1 DSS—Parallel Interface

In parallel interface, the paths of the display subsystem modules are the display controller and the RFBI. The display controller has two I/O pad modes and could be in the following configuration:

- Bypass mode (RFBI disabled), which implements the MIPI DPI protocol
- RFBI mode (RFBI enabled), which implements MIPI DBI 2.0 type B protocol

For more information about MIPI DPI and MIPI DBI protocols, see the DSS chapter in the *AM/DM37x Multimedia Device Technical Reference Manual* (literature number SPRUGN4).

6.5.2.1.1 DSS—Parallel Interface—Bypass Mode

Two types of LCD panel are supported:

- Thin film transistor (TFT) or active matrix technology
- Supertwisted nematic (STN) or passive matrix technology

Both configurations are discussed in the following paragraphs.

6.5.2.1.2 DSS—Parallel Interface—Bypass Mode—TFT Mode

Table 6-36 assumes testing over the recommended operating conditions and electrical characteristic conditions below (see Figure 6-30).

Table 6-35. DSS Timing Conditions—TFT Mode

TIMING CONDITION PARAMETER		VALUE		UNIT
		MIN	MAX	
Output Condition				
C_{LOAD}	Output load capacitance[(1)]		10	pF

(1) Buffer strength configuration: LB0 = 1

Table 6-36. DSS Switching Characteristics—TFT Mode[(4)]

NO.	PARAMETER		OPP100		OPP50		UNIT
			MIN	MAX	MIN	MAX	
DL0	$t_{d(pclkA\text{-}hsync)}$	Delay time, output pixel clock dss_pclk active edge to output horizontal synchronization dss_hsync transition	–4.215	4.215	–4.658	4.658	ns
DL1	$t_{d(pclkA\text{-}vsync)}$	Delay time, output pixel clock dss_pclk active edge to output vertical synchronization dss_vsync transition	–4.215	4.215	–4.658	4.658	ns

Table 6-36. DSS Switching Characteristics—TFT Mode[4] (continued)

NO.	PARAMETER		OPP100		OPP50		UNIT
			MIN	MAX	MIN	MAX	
DL2	$t_{d(pclkA-acbiasA)}$	Delay time, output pixel clock dss_pclk active edge to output data enable dss_acbias active level	–4.215	4.215	–4.658	4.658	ns
DL3	$t_{d(pclkA-dV)}$	Delay time, output pixel clock dss_pclk active edge to output data dss_data[23:0] valid	–4.215	4.215	–4.658	4.658	ns
DL4	$1 / t_{c(pclk)}$	Frequency[2], output pixel clock dss_pclk		74.3[3]		66[3]	MHz
DL5	$t_{w(pclk)}$	Pulse duration, output pixel clock dss_pclk low or high	0.45P[1]	0.55P[1] [5]	0.45P[1]	0.55P[1] [5]	ns

(1) P = dss_pclk period in ns

(2) The pixel clock frequency is software programmable via the pixel clock divider configuration from 1 to 255 division range in the DISPC_DIVISOR register.

(3) For the DSS (TFT mode) in HD-TV application, to run at full speed (74.3 MHz) it is recommended to use the dss_data[5:0] signals on the dss_data[23:18] balls (H26, H25, E28, J26, AC27, AC28). In that case, the dss_data[23:18] signals are available on the sys_boot0, sys_boot1, sys_boot3, sys_boot4, sys_boot5, and sys_boot6 balls (AH26, AG26, AF18, AF19, AE21, AF21) to run at full speed (74.3 MHz).
If the dss_data[5:0] signals are used on the dss_data[5:0] balls (AG22, AH22, AG23, AH23, AG24, AH24), OPP100 DSS (TFT mode) are limited at 66 MHz. The values may change following the silicon characterization result.

(4) See Section 4.3.4, *Processor Clocks*.

(5) tW(pclk) = 0.66.P when DISPC_DIVISOR[6:0] PCD = 3.

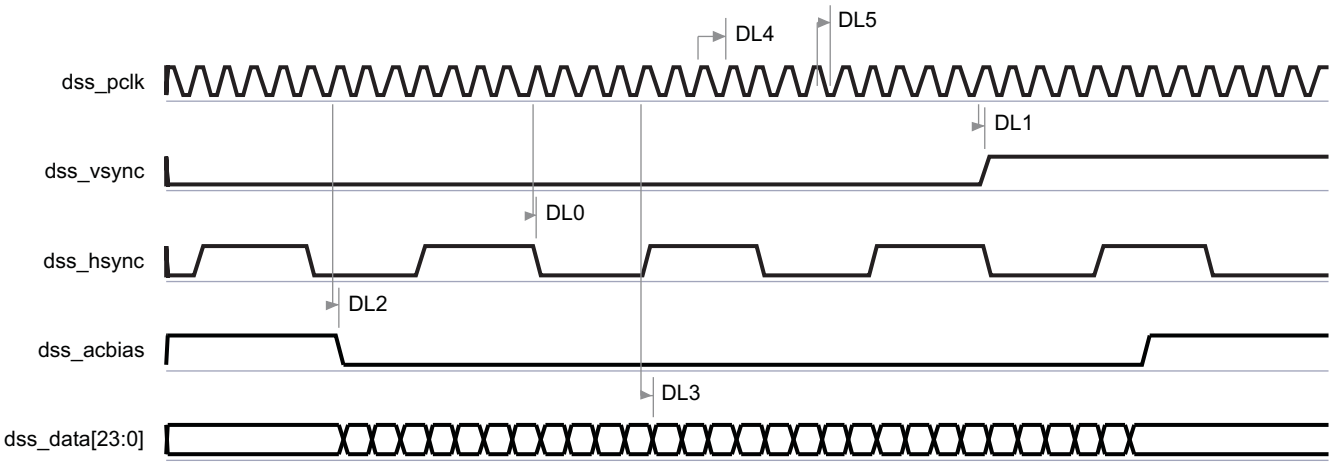

(1) The pixel data bus depends on the use of 8-, 9-, 12-, 16-, 18-, or 24-bit per pixel data output pins.

(2) The pixel clock frequency is programmable.

(3) All timings not illustrated in the waveform are progammable by software, and control signal polarity and driven edge of dss_pclk too.

(4) For more information, see the DSS chapter in the *AM/DM37x Multimedia Device Technical Reference Manual* (literature number SPRUGN4).

Figure 6-30. DSS—TFT Mode

6.5.2.1.3 DSS—Parallel Interface—Bypass Mode—STN Mode

Table 6-38 assumes testing over the recommended operating conditions and electrical characteristic conditions below (see Figure 6-31).

Table 6-37. DSS Timing Conditions—STN Mode

TIMING CONDITION PARAMETER		VALUE		UNIT
		MIN	MAX	
Output Condition				
C_{LOAD}	Output load capacitance[1]		40	pF

Copyright © 2010–2011, Texas Instruments Incorporated

(1) Buffer strength configuration: LB0 = 1

Table 6-38. DSS Switching Characteristics—STN Mode[(3) (4)]

NO.	PARAMETER		OPP100		OPP50		UNIT
			MIN	MAX	MIN	MAX	
DL3	$t_{d(pclkA-dV)}$	Delay time, output pixel clock dss_pclk active edge to output data dss_data[7:0] valid	–6.868	6.868	–6.868	6.868	ns
DL4	$1 / t_{c(pclk)}$	Frequency[(2)], output pixel clock dss_pclk		44		44	MHz
DL5	$t_{w(pclk)}$	Pulse duration, output pixel clock dss_pclk low or high	0.45P[(1)]	0.55P[(1) (5)]	0.45P[(1)]	0.55P[(1)(5)]	ns

(1) P = dss_pclk period in ns
(2) The pixel clock frequency is software programmable via the pixel clock divider configuration from 1 to 255 division range in the DISPC_DIVISOR register.
(3) The DSS in STN mode is used with 4 or 8 pins only; unused pixel data bits always remain low.
(4) See Section 4.3.4, *Processor Clocks*.
(5) tW(pclk) = 0.66P when DISPC_DIVISOR[6:0] PCD = 3.

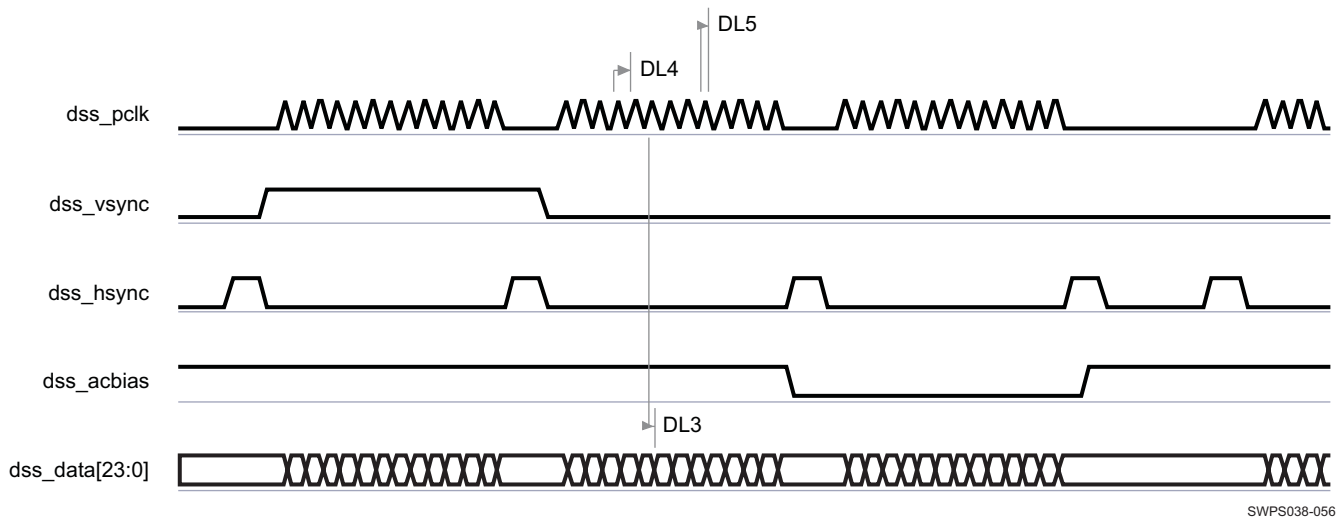

(1) The pixel data bus depends on the use of 4-, 8-, 12-, 16-, 18-, or 24-bit per pixel data output pins.
(2) All timings not illustrated in the waveform are progammable by software, and control signal polarity and driven edge of dss_pclk too.
(3) dss_vsync width must be programmed to be as small as possible.
(4) The pixel clock frequency is programmable.
(5) For more information, see the DSS chapter in the *AM/DM37x Multimedia Device Technical Reference Manual* (literature number SPRUGN4).

Figure 6-31. DSS—STN Mode

6.5.2.2 DSS—Parallel Interface— RFBI Mode — Applications

6.5.2.2.1 DSS—Parallel Interface—RFBI Mode— MIPI DBI-B 2.0 —LCD Panel

The Remote Frame Buffer Interface (RFBI) module provides the necessary control signals and data (MIPI® DBI 2.0 type B protocol) to interface to the LCD driver of the LCD panel.

Table 6-40 and Table 6-41 assume testing over the recommended operating conditions and electrical characteristic conditions below (see Figure 6-32 through Figure 6-34).

Table 6-39. DSS Timing Conditions—RFBI Mode—MIPI DBI 2.0 - LCD Panel[2]

TIMING CONDITION PARAMETER		VALUE		UNIT
		MIN	MAX	
Input Conditions				
t_R	Input signal rise time		15	ns
t_F	Input signal fall time		15	ns
Output Condition				
C_{LOAD}	Output load capacitance[1]		30	pF

(1) Buffer strength configuration: LB0 = 1.

(2) For any information regarding the RFBI registers configuration, see Display Subsystem / the Display Subsystem Environment / LCD Support / Parallel Interface / Parallel Interface in RFBI Mode (MIPI DBI Protocol) / Transaction Timing Diagrams section of the *AM/DM37x Multimedia Device Technical Reference Manual* (literature number SPRUGN4).

Table 6-40. DSS Timing Requirements—RFBI Mode—MIPI DBI 2.0 - LCD Panel

NO.	PARAMETER		OPP100		OPP50		UNIT
			MIN	MAX	MIN	MAX	
DR0	$t_{su(dV-rdH)}$	Setup time, input data rfbi_da[15:0] valid to output read enable rfbi_rd high	7.3		6.3		ns
DR1	$t_{h(rdH-dIV)}$	Hold time, output read enable rfbi_rd high to input data rfbi_da[15:0] invalid	10.6		9.6		ns
	$t_{d(Data\ sampled)}$	Input data rfbi_da[15:0] sampled at the end of the access time	N[1]		N[1]		ns

(1) N = (AccessTime) * (TimeParaGranularity + 1) * L4CLK

Table 6-41. DSS Switching Characteristics— RFBI Mode— MIPI DBI 2.0 - LCD Panel

PARAMETER		OPP100		OPP50		UNIT
		MIN	MAX	MIN	MAX	
$t_{w(wrH)}$	Pulse duration, output write enable rfbi_wr high	A[1]		A[1]		ns
$t_{w(wrL)}$	Pulse duration, output write enable rfbi_wr low	B[2]		B[2]		ns
$t_{d(a0-wrL)}$	Delay time, output command/data control rfbi_a0 transition to output write enable rfbi_wr low	C[3]		C[3]		ns
$t_{d(wrH-a0)}$	Delay time, output write enable rfbi_wr high to output command/data control rfbi_a0 transition	D[4]		D[4]		ns
$t_{d(csx-wrL)}$	Delay time, output chip select rfbi_csx[14] low to output write enable rfbi_wr low	E[5]		E[5]		ns
$t_{d(wrH-csxH)}$	Delay time, output write enable rfbi_wr high to output chip select rfbi_csx[14] high	F[6]		F[6]		ns
$t_{d(dV)}$	Output data rfbi_da[15:0] valid	G[7]		G[7]		ns
$t_{d(a0H-rdL)}$	Delay time, output command/data control rfbi_a0 high to output read enable rfbi_rd low	H[8]		H[8]		ns
$t_{d(rdlH-a0)}$	Delay time, output read enable rfbi_rd high to output command/data control rfbi_a0 transition	I[9]		I[9]		ns
$t_{w(rdH)}$	Pulse duration, output read enable rfbi_rd high	J[10]		J[10]		ns
$t_{w(rdL)}$	Pulse duration, output read enable rfbi_rd low	K[11]		K[11]		ns
$t_{d(rdL-csxL)}$	Delay time, output read enable rfbi_rd low to output chip select rfbi_csx[14] low	L[12]		L[12]		ns
$t_{d(rdH-csxH)}$	Delay time, output read enable rfbi_rd high to output chip select rfbi_csx[14] high	M[13]		M[13]		ns
$t_{R(wr)}$	Rise time, output write enable rfbi_wr		10		10	ns
$t_{F(wr)}$	Fall time, output write enable rfbi_wr		10		10	ns
$t_{R(a0)}$	Rise time, output command/data control rfbi_a0		10		10	ns
$t_{F(a0)}$	Fall time, output command/data control rfbi_a0		10		10	ns
$t_{R(csx)}$	Rise time, output chip select rfbi_csx[14]		10		10	ns

Copyright © 2010–2011, Texas Instruments Incorporated

Table 6-41. DSS Switching Characteristics— RFBI Mode— MIPI DBI 2.0 - LCD Panel (continued)

PARAMETER		OPP100		OPP50		UNIT
		MIN	MAX	MIN	MAX	
$t_{F(csx)}$	Fall time, output chip select rfbi_csx(14)		10		10	ns
$t_{R(d)}$	Rise time, output data rfbi_da[15:0]		10		10	ns
$t_{F(d)}$	Fall time, output data rfbi_da[15:0]		10		10	ns
$t_{R(rd)}$	Rise time, output read enable rfbi_rd		10		10	ns
$t_{F(rd)}$	Fall time, output read enable rfbi_rd		10		10	ns

(1) A = (WECycleTime – WEOffTime) * (TimeParaGranularity + 1) * L4CLK
(2) B = (WEOffTime – WEOntime) * (TimeParaGranularity + 1) * L4CLK
(3) C = WEOnTime * (TimeParaGranularity + 1) * L4CLK
(4) D = (WECycleTime + CSPulseWidth – WEOffTime) * (TimeParaGranularity + 1) * L4CLK if mode Write to Read or Read to Write is enabled
(5) E = (WEOnTime – CSOnTime) * (TimeParaGranularity + 1) * L4CLK
(6) F = (CSOffTime – WEOffTime) * (TimeParaGranularity + 1) * L4CLK
(7) G = WECycleTime * (TimeParaGranularity + 1) * L4CLK
(8) H = REOnTime * (TimeParaGranularity + 1) * L4CLK
(9) I = (RECycleTime + CSPulseWidth – REOffTime) * (TimeParaGranularity + 1) * L4CLK if mode Write to Read or Read to Write is enabled
(10) J = (RECycleTime – REOffTime) * (TimeParaGranularity + 1) * L4CLK
(11) K = (REOffTime – REOntime) * (TimeParaGranularity + 1) * L4CLK
(12) L = (REOnTime – CSOnTime) * (TimeParaGranularity + 1) * L4CLK
(13) M = (CSOffTime – REOffTime) * (TimeParaGranularity + 1) * L4CLK
(14) In rfbi_csx, x is equal to 0 or 1.

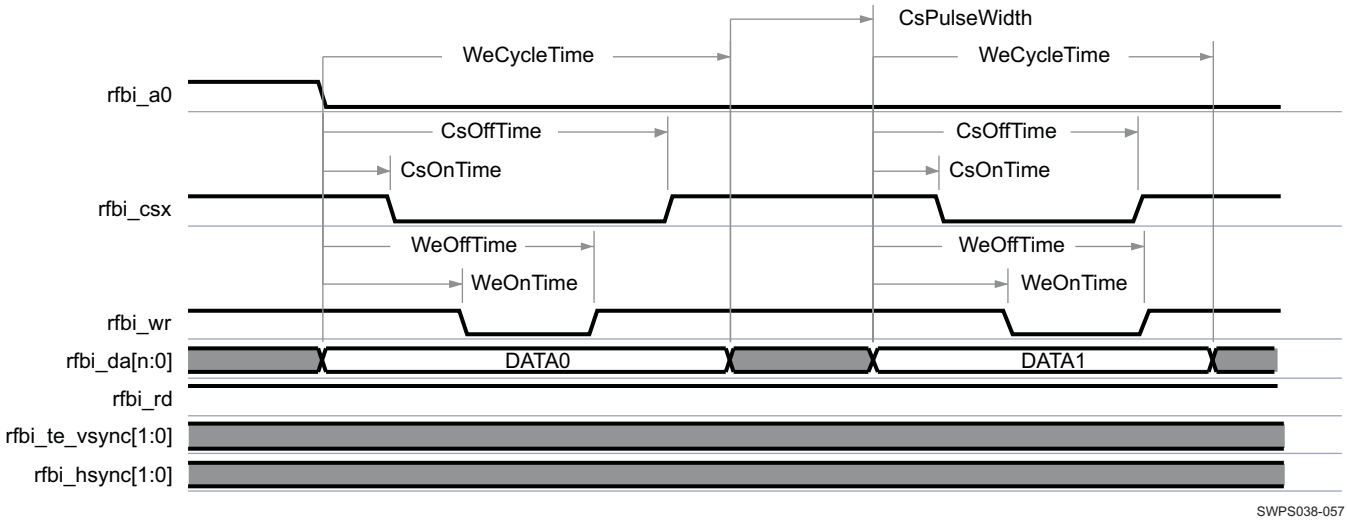

(1) In rfbi_csx, x is equal to 0 or 1.
(2) rfbi_data[n:0], n up to 15
(3) For more information, see the DSS chapter in the *AM/DM37x Multimedia Device Technical Reference Manual* (literature number SPRUGN4).

Figure 6-32. DSS—RFBI Mode—MIPI DBI 2.0 —LCD Panel—Command / Data Write

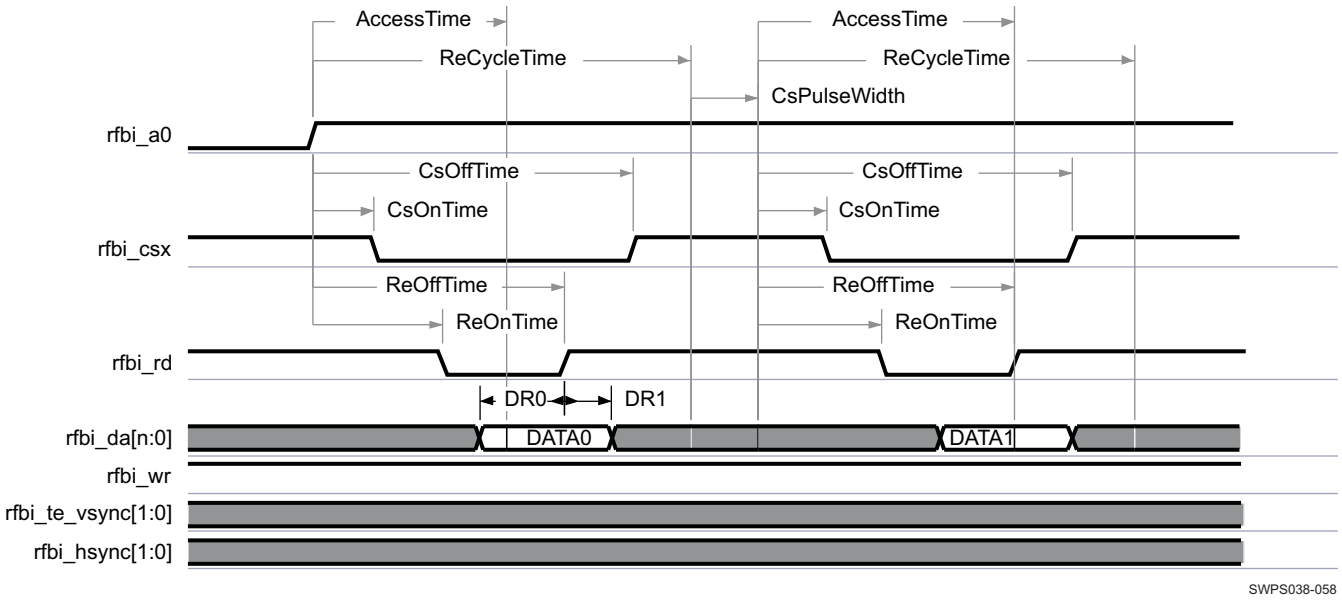

(1) In rfbi_csx, x is equal to 0 or 1.
(2) rfbi_data[n:0], n up to 15
(3) For more information, see the DSS chapter in the *AM/DM37x Multimedia Device Technical Reference Manual* (literature number SPRUGN4).

Figure 6-33. DSS—RFBI Mode—MIPI DBI 2.0 —LCD Panel—Command / Data Read

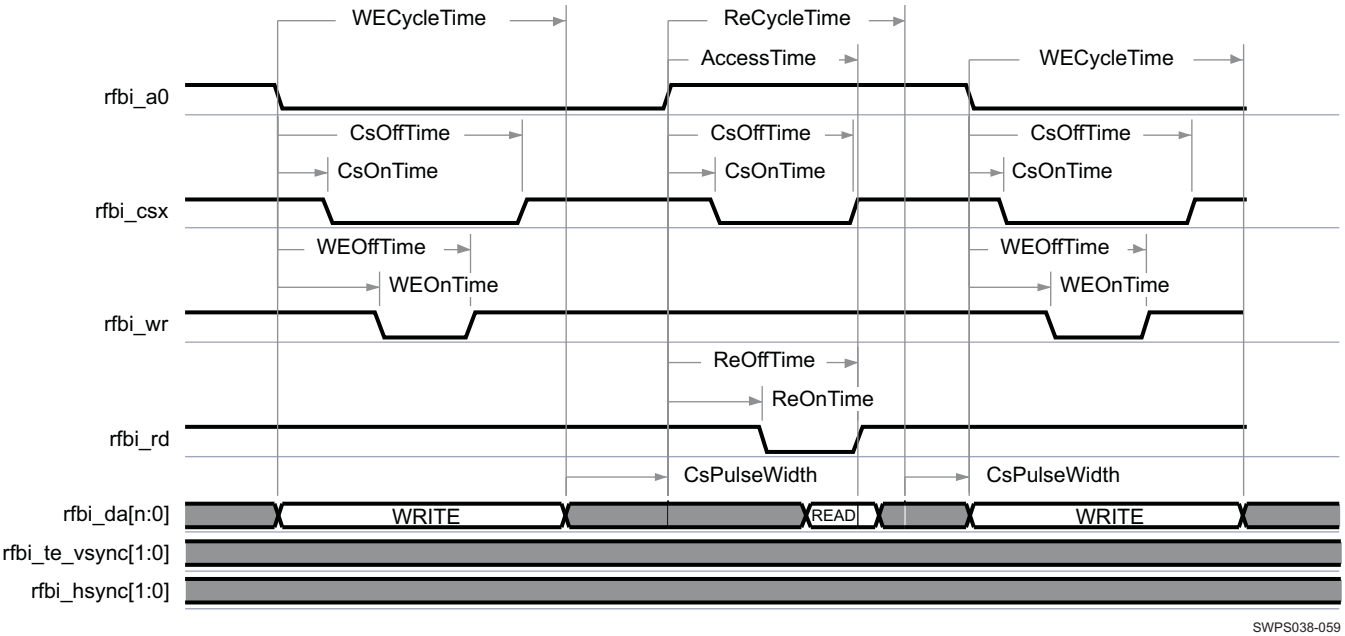

(1) In rfbi_csx, x is equal to 0 or 1.
(2) rfbi_data[n:0], n up to 15
(3) For more information, see the DSS chapter in the *AM/DM37x Multimedia Device Technical Reference Manual* (literature number SPRUGN4).

Figure 6-34. DSS—RFBI Mode—MIPI DBI 2.0 — LCD Panel—Command / Data Write to Read and Read to Write Modes

Copyright © 2010–2011, Texas Instruments Incorporated

6.5.2.2.2 DSS—Parallel Interface—RFBI Mode—Pico DLP

The Remote Frame Buffer Interface (RFBI) module can provide also the necessary control signals and data to interface to the Pico DLP driver of the Pico DLP panel. Table 6-42 assumes testing over the recommended operating conditions and electrical characteristic conditions below (see Figure 6-35).

Table 6-42. DSS Timing Conditions—RFBI Mode—Pico DLP

TIMING CONDITION PARAMETER		VALUE		UNIT
		MIN	MAX	
Output Condition				
C_{LOAD}	Output load capacitance[(1)]		5	pF

(1) Buffer strength configuration: LB0 = 0

To use Pico DLP application, RFBI register must be configured as shown in Table 6-43:

Table 6-43. DSS Register Configuration—RFBI Mode—Pico DLP

DESCRIPTION	REGISTER AND BIT FIELD[(1)]	BIT	VALUES
Selection parallel mode	RFBI_CONFIGi and ParallelMode	[1:0]	0b11: 16-bit parallel output interface selected
Time Granularity (multiplies signal timing latencies by 2).	RFBI_CONFIGi andTimeGranularity	[4]	0b0: x2 latency disable
CS signal assertion time from Start Access Time	RFBI_ONOFF_TIMEi and CSOnTime	[3:0]	0b0000
CS signal de-assertion time from Start Access Time	RFBI_ONOFF_TIMEi and CSOffTime	[9:4]	0b000100: 4 cycles
WE signal assertion time from Start Access Time	RFBI_ONOFF_TIMEi and WEOnTime	[13:10]	0b0000
WE signal de-assertion time from Start Access Time	RFBI_ONOFF_TIMEi and WEOffTime	[19:14]	0b000010: 2 cycles
RE signal assertion time from Start Access Time	RFBI_ONOFF_TIMEi and REOnTime	[23:20]	0b0000
RE signal de-assertion time from Start Access Time	RFBI_ONOFF_TIMEi and REOffTime	[29:24]	0b000000
Write cycle time	RFBI_CYCLE_TIMEi and WECycleTime	[5:0]	0b000100: 4 cycles
Read cycle time	RFBI_CYCLE_TIMEi and ReCycleTime	[11:6]	0b000000
CS pulse width	RFBI_CYCLE_TIMEi and CSPulseWidth	[17:12]	0b000000
Read to Write CS pulse width enable	RFBI_CYCLE_TIMEi and RWEnable	[18]	0b0
Read to Read CS pulse width enable	RFBI_CYCLE_TIMEi and RREnable	[19]	0b0
Write to Write CS pulse width enable	RFBI_CYCLE_TIMEi and WWEnable	[20]	0b0
Write to Read CS pulse width enable	RFBI_CYCLE_TIMEi and WREnable	[21]	0b0
From Start Access Time to CLK rising edge used for the first data capture	RFBI_CYCLE_TIMEi and AccessTime	[27:22]	0b000000

(1) i is equal to 0 or 1. For more information, see the DSS chapter in the *AM/DM37x Multimedia Device Technical Reference Manual* (literature number SPRUGN4).

Table 6-44. DSS Switching Characteristics—RFBI Mode—Pico DLP[15][17][18]

PARAMETER		OPP100		OPP50		UNIT
		MIN	MAX	MIN	MAX	
$t_{w(wrH)}$	Pulse duration, output write enable rfbi_wr high	A[1]		A[1]		ns
$t_{w(wrL)}$	Pulse duration, output write enable rfbi_wr low	B[2]		B[2]		ns
$t_{d(a0\text{-}wrL)}$	Delay time, output command/data control rfbi_a0 transition to output write enable rfbi_wr low	C[3]		C[3]		ns
$t_{d(wrH\text{-}a0)}$	Delay time, output write enable rfbi_wr high to output command/data control rfbi_a0 transition	D[4]		D[4]		ns
$t_{d(csx\text{-}wrL)}$	Delay time, output chip select rfbi_csx[14] low to output write enable rfbi_wr low	E[5]		E[5]		ns
$t_{d(wrH\text{-}csxH)}$	Delay time, output write enable rfbi_wr high to output chip select rfbi_csx[14] high	F[6]		F[6]		ns
$t_{d(dataV)}$	Output data rfbi_da[15:0][16] valid	G[7]		G[7]		ns
$t_{d(Skew)}$	Skew between output write enable falling rfbi_wr and output data rfbi_da[15:0][16] high or low	15.5		15.5		ns
$t_{d(a0H\text{-}rdL)}$	Delay time, output command/data control rfbi_a0 high to output read enable rfbi_rd low	H[8]		H[8]		ns
$t_{d(rdlH\text{-}a0)}$	Delay time, output read enable rfbi_rd high to output command/data control rfbi_a0 transition	I[9]		I[9]		ns
$t_{w(rdH)}$	Pulse duration, output read enable rfbi_rd high	J[10]		J[10]		ns
$t_{w(rdL)}$	Pulse duration, output read enable rfbi_rd low	K[11]		K[11]		ns
$t_{d(rdL\text{-}csxL)}$	Delay time, output read enable rfbi_rd low to output chip select rfbi_csx[14] low	L[12]		L[12]		ns
$t_{d(rdL\text{-}csxH)}$	Delay time, output read enable rfbi_rd low to output chip select rfbi_csx[14] high	M[13]		M[13]		ns
$t_{R(wr)}$	Rise time, output write enable rfbi_wr		7		7	ns
$t_{F(wr)}$	Fall time, output write enable rfbi_wr		7		7	ns
$t_{R(a0)}$	Rise time, output command/data control rfbi_a0		7		7	ns
$t_{F(a0)}$	Fall time, output command/data control rfbi_a0		7		7	ns
$t_{R(csx)}$	Rise time, output chip select rfbi_csx[14]		7		7	ns
$t_{F(csx)}$	Fall time, output chip select rfbi_csx[14]		7		7	ns
$t_{R(d)}$	Rise time, output data rfbi_da[15:0][16]		7		7	ns
$t_{F(d)}$	Fall time, output data rfbi_da[15:0][16]		7		7	ns
$t_{R(rd)}$	Rise time, output read enable rfbi_rd		7		7	ns
$t_{F(rd)}$	Fall time, output read enable rfbi_rd		7		7	ns
CsOnTime	CS signal assertion time from Start Access Time - RFBI_ONOFF_TIMEi Register	0[19]				ns
CsOffTime	CS signal de-assertion time from Start Access Time - RFBI_ONOFF_TIMEi Register	40[19]				ns
WeOnTime	WE signal assertion time from Start Access Time - RFBI_ONOFF_TIMEi Register	0[19]				ns
WeOffTime	WE signal de-assertion time from Start Access Time - RFBI_ONOFF_TIMEi Register	20[19]				ns
ReOnTime	RE signal assertion time from Start Access Time - RFBI_ONOFF_TIMEi Register	-				ns
ReOffTime	RE signal de-assertion time from Start Access Time - RFBI_ONOFF_TIMEi Register	-				ns
WeCycleTime	Write cycle time - RFBI_CYCLE_TIMEi Register	40[19]				ns
ReCycleTime	Read cycle time - RFBI_CYCLE_TIMEi Register	-				ns
CsPulseWidth	CS pulse width - RFBI_CYCLE_TIMEi Register	0[19]				ns

Copyright © 2010–2011, Texas Instruments Incorporated

(1) A = (WECycleTime – WEOffTime) * (TimeParaGranularity + 1) * L4CLK
(2) B = (WEOffTime – WEOntime) * (TimeParaGranularity + 1) * L4CLK
(3) C = WEOnTime * (TimeParaGranularity + 1) * L4CLK
(4) D = (WECycleTime + CSPulseWidth – WEOffTime) * (TimeParaGranularity + 1) * L4CLK if mode Write to Read or Read to Write is enabled.
(5) E = (WEOnTime – CSOnTime) * (TimeParaGranularity + 1) * L4CLK
(6) F = (CSOffTime – WEOffTime) * (TimeParaGranularity + 1) * L4CLK
(7) G = WECycleTime * (TimeParaGranularity + 1) * L4CLK
(8) H = REOnTime * (TimeParaGranularity + 1) * L4CLK
(9) I = (RECycleTime + CSPulseWidth – REOffTime) * (TimeParaGranularity + 1) * L4CLK if mode Write to Read or Read to Write is enabled.
(10) J = (RECycleTime – REOffTime) * (TimeParaGranularity + 1) * L4CLK
(11) K = (REOffTime – REOntime) * (TimeParaGranularity + 1) * L4CLK
(12) L = (REOnTime – CSOnTime) * (TimeParaGranularity + 1) * L4CLK
(13) M = (CSOffTime – REOffTime) * (TimeParaGranularity + 1) * L4CLK
(14) In rfbi_csx, x is equal to 0 or 1.
(15) See Section 4.3.4, *Processor Clocks*.
(16) 16-bit parallel output interface is selected in DSS register.
(17) At OPP100, L4 clock is 100 MHz and at OPP50, L4 clock is 50 MHz.
(18) rfbi_wr must be at 25 MHz.
(19) These values are calculated by the following formula: RFBI Register (Value) * L4 Clock (ns).

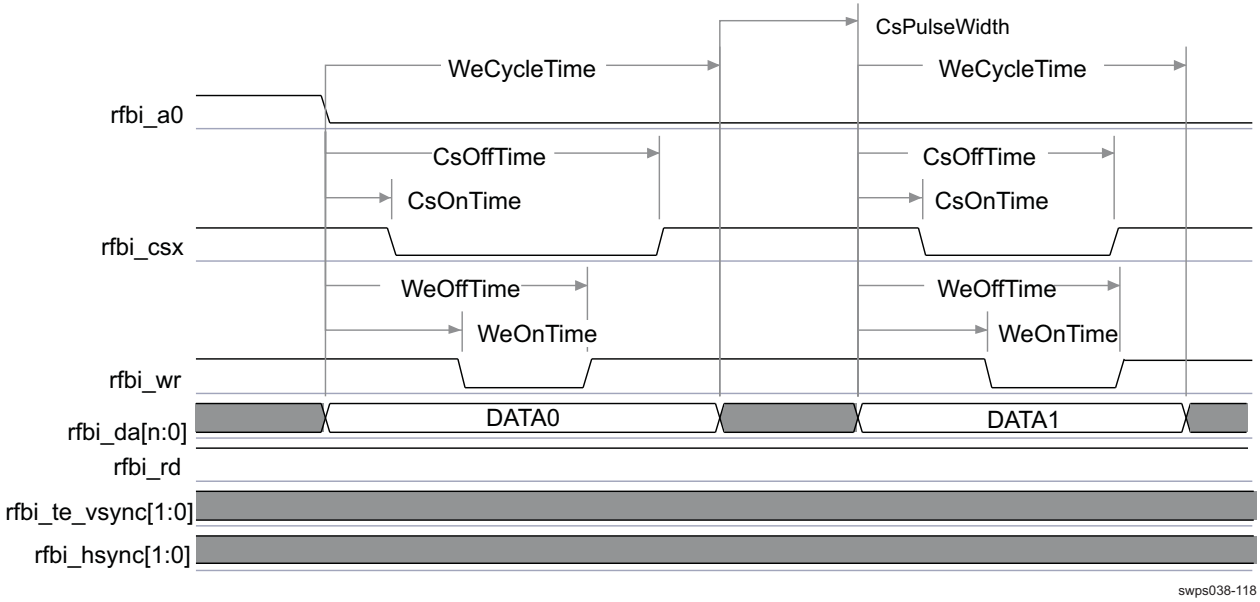

Figure 6-35. DSS—RFBI Mode—Pico DLP—Command / Data Write[(1)(2)]

(1) In rfbi_csx, x is equal to 0 or 1.
(2) rfbi_da[n:0], n up to 15

6.6 Serial Communications Interfaces

6.6.1 Multichannel Buffered Serial Port (McBSP)

NOTE

For more information, see Multi-Channel Buffered Serial Port chapter of the *AM/DM37x Multimedia Device Technical Reference Manual* (literature number SPRUGN4).

The Multichannel Buffered Serial Port (McBSP) provides a full duplex direct serial interface between the chip and other devices in a system such as other application chips, codecs. It can accommodate a wide range of peripherals and clocked frame oriented protocols (I2S, PCM, T) due to its high level of versatility.

McBSP may support two types of data transfer at the system level:

- The full cycle mode, for which one clock period is used to transfer the data, generated on one edge and captured on the same edge (one clock period later).
- The half cycle mode, for which one half clock period is used to transfer the data, generated on one edge and captured on the opposite edge (one half clock period later). Note that a new data is generated only every clock period, which secures the required hold time.

The interface clock (clkx/clkr) activation edge (data/frame sync capture and generation) has to be configured accordingly with the external peripheral (activation edge capability) and the type of data transfer required at the system level.

Depending on the number of pins, McBSP supports either:

- 6-pin mode: dx and dr as data pins; clkx, clkr, fsx, and fsr as control pins
- 4-pin mode: dx and dr as data pins; clkx and fsx pins as control pins. The clkx and fsx pins are internally looped back, via software configuration, respectively to the clkr and fsr internal signals for data receive.

McBSP1 supports the 6-pin mode. McBSP2, 3, 4, and 5 support only the 4-pin mode.

The following sections describe the timing characteristics for applications in normal mode (that is, McBSPx connected to one peripheral) and T applications in multipoint mode.

6.6.1.1 McBSP Timing Conditions—Normal Mode

Table 6-46 through Table 6-70 assume testing over the recommended operating conditions and electrical characteristic conditions below (see Figure 6-36 through Figure 6-43).

Table 6-45. McBSP Timing Conditions—Normal Mode

TIMING CONDITION PARAMETER		VALUE	UNIT
Input Conditions			
t_R	Input signal rise time	2	ns
t_F	Input signal fall time	2	ns
Output Condition			
C_{LOAD}	Output load capacitance[(1)]	10	pF

(1) Buffer strength configuration:
- McBSP4 - Set #1: LB0 = 1.
- Otherwise: LB0 = 0.

Copyright © 2010–2011, Texas Instruments Incorporated

Table 6-46. McBSP Output Clock Characteristics—Normal Mode[4]

PARAMETER				OPP100		OPP50		UNIT
				MIN	MAX	MIN	MAX	
McBSP1	tc(CLK)	Cycle time, mcbsp1_clkx (multiplexing mode 0) / mcbsp1_clkr (multiplexing mode 0 & 2)			48		24	MHz
McBSP2	tc(CLK)	Cycle time, mcbsp2_clkx (multiplexing mode 0)			48		24	MHz
McBSP3	tc(CLK)	Cycle time, mcbsp3_clkx	IO set 1 (multiplexing mode 0)		32		16	MHz
			IO set 2 (multiplexing mode 1)		48		24	
			IO set 3 (multiplexing mode 2)		48		24	
McBSP4	tc(CLK)	Cycle time, mcbsp4_clkx	IO set 1 (multiplexing mode 0)		48		16	MHz
			IO set 3 (multiplexing mode 2)		32		16	
McBSP5	tc(CLK)	Cycle time, mcbsp5_clkx	IO set 2 (multiplexing mode 1)		32		16	MHz
$t_{W(CLKH)}$	Typical pulse duration, mcbsp1_clkr / mcbspx_clkx high[2]			0.5*P[1]		0.5*P[1]		ns
$t_{W(CLKL)}$	Typical pulse duration, mcbsp1_clkr / mcbspx_clkx low[2]			0.5*P[1]		0.5*P[1]		ns
$t_{dc(CLK)}$	Duty cycle error, mcbsp1_clkr / mcbspx_clkx[2]			–0.75	0.75	–0.75	0.75	ns
	Jitter, mcbsp1_clkr / mcbspx_clkx[3] / mcbsp_clks			-0.40	0.40	-0.40	0.40	ns

(1) P = mcbspy_clkx[2] or mcbsp1_clkr output clock period in ns
(2) In mcbspy, y is equal to 1, 2, 3, 4, or 5.
(3) In mcbspx, x identifies the McBSP number: 1, 2, 3, 4, or 5.
(4) See Section 4.3.4, *Processor Clocks*.

6.6.1.1.1 Rising Edge as Activation Mode

6.6.1.1.1.1 Timing with Rising Edge as Activation Edge—Receive Mode

Table 6-47. McBSP1, 2, and 3 (Sets #2 and #3) Timing Requirements—Rising Edge and Receive Mode[1] [2]

NO.	PARAMETER			OPP100		OPP50		UNIT
				MIN	MAX	MIN	MAX	
B3	$t_{su(DRV-CLKAE)}$	Setup time, mcbspx_dr valid before mcbsp1_clkr / mcbspx_clkx active edge	Master	4.36		8.63		ns
			Slave	3.67		7.94		ns
B4	$t_{h(CLKAE-DRV)}$	Hold time, mcbspx_dr valid after mcbsp1_clkr / mcbspx_clkx active edge	Master	1.01		1.01		ns
			Slave	0.4		0.4		ns
B5	$t_{su(FSV-CLKAE)}$	Setup time, mcbsp1_fsr / mcbspx_fsx valid before mcbsp1_clkr / mcbspx_clkx active edge		3.67		7.94		ns
B6	$t_{h(CLKAE-FSV)}$	Hold time, mcbsp1_fsr / mcbspx_fsx valid after mcbsp1_clkr / mcbspx_clkx active edge		0.5		0.5		ns

(1) In mcbspx, x identifies the McBSP number: 1, 2, or 3. Note that for the McBSP3, these timings concern only Set #2 (multiplexing mode on UART pins) and Set #3 (multiplexing mode on McBSP1 pins).

(2) See Section 4.3.4, *Processor Clocks*.

Table 6-48. McBSP1, 2, and 3 (Sets #2 and #3) Switching Characteristics—Rising Edge and Receive Mode[(1) (2)]

NO.	PARAMETER		OPP100		OPP50		UNIT
			MIN	MAX	MIN	MAX	
B2	$t_{d(CLKAE-FSV)}$	Delay time, mcbsp1_clkr / mcbspx_clkx active edge to mcbsp1_fsr / mcbspx_fsx valid	0.7	14.79	0.7	29.58	ns

(1) In mcbspx, x identifies the McBSP number: 1, 2, or 3. Note that for the McBSP3, these timings concern only Set #2 (multiplexing mode on UART pins) and Set #3 (multiplexing mode on McBSP1 pins).

(2) See Section 4.3.4, *Processor Clocks*.

Table 6-49. McBSP4 (Set #1) Timing Requirements—Rising Edge and Receive Mode[(1) (2)]

NO.	PARAMETER			OPP100		OPP50		UNIT
				MIN	MAX	MIN	MAX	
B3	$t_{su(DRV-CLKXAE)}$	Setup time, mcbspx_dr valid before mcbspx_clkx active edge	Master	2.87		8.63		ns
			Slave	3.67		7.94		ns
B4	$t_{h(CLKXAE-DRV)}$	Hold time, mcbspx_dr valid after mcbspx_clkx active edge	Master	1.01		1.01		ns
			Slave	0.4		0.4		ns
B5	$t_{su(FSXV-CLKXAE)}$	Setup time, mcbspx_fsx valid before mcbspx_clkx active edge		3.67		7.94		ns
B6	$t_{h(CLKXAE-FSXV)}$	Hold time, mcbspx_fsx valid after mcbspx_clkx active edge		0.5		0.5		ns

(1) In mcbspx, x identifies the McBSP number: 4. Note that for the McBSP4, these timings concern only Set #1: multiplexing mode by default. The McBSP4 is also multiplexed on GPMC pins (Set #2): the corresponding timings are specified in Table 6-51 and Table 6-52.

(2) See Section 4.3.4, *Processor Clocks*.

Table 6-50. McBSP4 (Set #1) Switching Characteristics—Rising Edge and Receive Mode[(1) (2)]

NO.	PARAMETER		OPP100		OPP50		UNIT
			MIN	MAX	MIN	MAX	
B2	$t_{d(CLKXAE-FSXV)}$	Delay time, mcbspx_clkx active edge to mcbspx_fsx valid	0.7	16.56	0.7	33.12	ns

(1) In mcbspx, x identifies the McBSP number: 4. Note that for the McBSP4, these timings concern only Set #1: multiplexing mode by default. The McBSP4 is also multiplexed on GPMC pins (Set #2): the corresponding timings are specified in Table 6-51 and Table 6-52.

(2) See Section 4.3.4, *Processor Clocks*.

Table 6-51. McBSP3 (Set #1), 4 (Set #2), and 5 Timing Requirements—Rising Edge and Receive Mode[(1) (2)]

NO.	PARAMETER			OPP100		OPP50		UNIT
				MIN	MAX	MIN	MAX	
B3	$t_{su(DRV-CLKXAE)}$	Setup time, mcbspx_dr valid before mcbspx_clkx active edge	Master	6.49		12.90		ns
			Slave	5.80		12.21		ns
B4	$t_{h(CLKXAE-DRV)}$	Hold time, mcbspx_dr valid after mcbspx_clkx active edge	Master	1.01		1.01		ns
			Slave	0.4		0.4		ns
B5	$t_{su(FSXV-CLKXAE)}$	Setup time, mcbspx_fsx valid before mcbspx_clkx active edge		5.81		12.21		ns
B6	$t_{h(CLKXAE-FSXV)}$	Hold time, mcbspx_fsx valid after mcbspx_clkx active edge		0.5		0.5		ns

Copyright © 2010–2011, Texas Instruments Incorporated

(1) In mcbspx, x identifies the McBSP number: 3, 4, or 5. Note that for the McBSP3, these timings concern only Set #1: multiplexing mode by default. The McBSP3 is also multiplexed on UART pins (Set #2) and on McBSP1 pins (Set #3): the corresponding timings are specified in Table 6-47 and Table 6-48.
For the McBSP4, these timings concern only Set #2 (multiplexing mode on GPMC pins).

(2) See Section 4.3.4, *Processor Clocks*.

Table 6-52. McBSP3 (Set #1), 4 (Set #2), and 5 Switching Characteristics—Rising Edge and Receive Mode[(1) (2)]

NO.	PARAMETER		OPP100		OPP50		UNIT
			MIN	MAX	MIN	MAX	
B2	$t_{d(CLKXAE-FSXV)}$	Delay time, mcbspx_clkx active edge to mcbspx_fsx valid	0.7	22.18	0.7	44.37	ns

(1) In mcbspx, x identifies the McBSP number: 3, 4, or 5. Note that for the McBSP3, these timings concern only Set #1: multiplexing mode by default. The McBSP3 is also multiplexed on UART pins (Set #2) and on McBSP1 pins (Set #3): the corresponding timings are specified in Table 6-47 and Table 6-48.
For the McBSP4, these timings concern only Set #2 (multiplexing mode on GPMC pins)

(2) See Section 4.3.4, *Processor Clocks*.

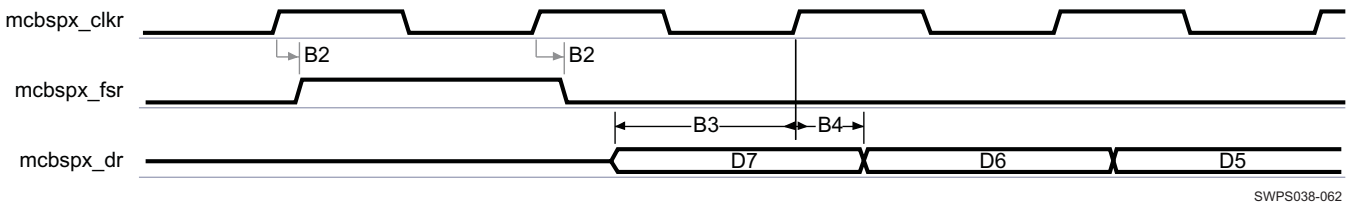

(1) In mcbspx, x identifies the McBSP number: 1, 2, 3, 4, or 5.

Figure 6-36. McBSP Rising Edge Receive Timing in Master Mode

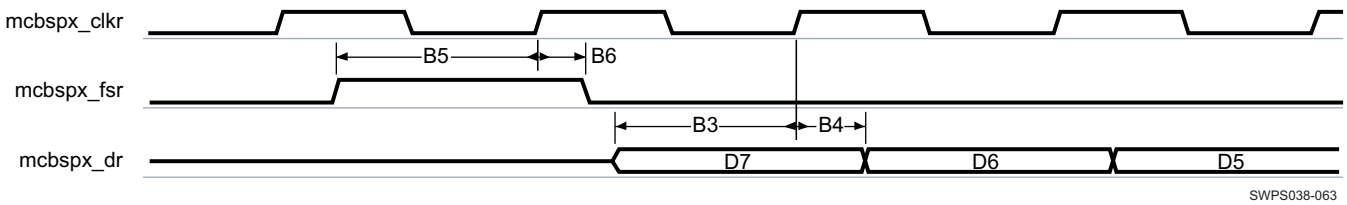

(1) In mcbspx, x identifies the McBSP number: 1, 2, 3, 4, or 5.

Figure 6-37. McBSP Rising Edge Receive Timing in Slave Mode

6.6.1.1.1.2 Timing with Rising Edge as Activation Edge—Transmit Mode

Table 6-53. McBSP1, 2, and 3 (Sets #2 and #3) Timing Requirements—Rising Edge and Transmit Mode[(1) (2)]

NO.	PARAMETER		OPP100		OPP50		UNIT
			MIN	MAX	MIN	MAX	
B5	$t_{su(FSXV-CLKXAE)}$	Setup time, mcbspx_fsx valid before mcbspx_clkx active edge	3.67		7.94		ns
B6	$t_{h(CLKXAE-FSXV)}$	Hold time, mcbspx_fsx valid after mcbspx_clkx active edge	0.5		0.5		ns

(1) In mcbspx, x identifies the McBSP number: 1, 2, or 3. Note that for the McBSP3, these timings concern only Set #2 (multiplexing mode on UART pins) and Set #3 (multiplexing mode on McBSP1 pins).

(2) See Section 4.3.4, *Processor Clocks*.

Table 6-54. McBSP1, 2, and 3 (Sets #2 and #3) Switching Characteristics—Rising Edge and Transmit Mode[(1) (2)]

NO.	PARAMETER			OPP100		OPP50		UNIT
				MIN	MAX	MIN	MAX	
B2	$t_{d(CLKXAE-FSXV)}$	Delay time, mcbspx_clkx active edge to mcbspx_fsx valid		0.7	14.79	0.7	29.58	ns
B8	$t_{d(CLKXAE-DXV)}$	Delay time, mcbspx_clkx active edge to mcbspx_dx valid	Master	0.6	14.79	0.6	29.58	ns
			Slave	0.6	13.89	0.6	28.68	ns

(1) In mcbspx, x identifies the McBSP number: 1, 2, or 3. Note that for the McBSP3, these timings concern only Set #2 (multiplexing mode on UART pins) and Set #3 (multiplexing mode on McBSP1 pins).

(2) See Section 4.3.4, *Processor Clocks*.

Table 6-55. McBSP4 (Set #1) Timing Requirements—Rising Edge and Transmit Mode[(1) (2)]

NO.	PARAMETER		OPP100		OPP50		UNIT
			MIN	MAX	MIN	MAX	
B5	$t_{su(FSXV-CLKXAE)}$	Setup time, mcbspx_fsx valid before mcbspx_clkx active edge	3.67		7.94		ns
B6	$t_{h(CLKXAE-FSXV)}$	Hold time, mcbspx_fsx valid after mcbspx_clkx active edge	0.5		0.5		ns

(1) In mcbspx, x identifies the McBSP number: 4. Note that for the McBSP4, these timings concern only Set #1: multiplexing mode by default. The McBSP4 is also multiplexed on GPMC pins (Set #2): the corresponding timings are specified in Table 6-57 and Table 6-58.

(2) See Section 4.3.4, *Processor Clocks*.

Table 6-56. McBSP4 (Set #1) Switching Characteristics—Rising Edge and Transmit Mode[(1) (2)]

NO.	PARAMETER			OPP100		OPP50		UNIT
				MIN	MAX	MIN	MAX	
B2	$t_{d(CLKXAE-FSXV)}$	Delay time, mcbspx_clkx active edge to mcbspx_fsx valid		0.7	16.56	0.7	33.12	ns
B8	$t_{d(CLKXAE-DXV)}$	Delay time, mcbspx_clkx active edge to mcbspx_dx valid	Master	0.6	16.56	0.6	33.12	ns
			Slave	0.6	17.15	0.6	32.22	ns

(1) In mcbspx, x identifies the McBSP number: 4. Note that for the McBSP4, these timings concern only Set #1: multiplexing mode by default. The McBSP4 is also multiplexed on GPMC pins (Set #2): the corresponding timings are specified in Table 6-57 and Table 6-58.

(2) See Section 4.3.4, *Processor Clocks*.

Table 6-57. McBSP3 (Set #1), 4 (Set #2), and 5 Timing Requirements—Rising Edge and Transmit Mode[(1) (2)]

NO.	PARAMETER		OPP100		OPP50		UNIT
			MIN	MAX	MIN	MAX	
B5	$t_{su(FSXV-CLKXAE)}$	Setup time, mcbspx_fsx valid before mcbspx_clkx active edge	5.81		12.21		ns
B6	$t_{h(CLKXAE-FSXV)}$	Hold time, mcbspx_fsx valid after mcbspx_clkx active edge	0.5		0.5		ns

(1) In mcbspx, x identifies the McBSP number: 3, 4, or 5. Note that for the McBSP3, these timings concern only Set #1: multiplexing mode by default. The McBSP3 is also multiplexed on UART pins (Set #2) and on McBSP1 pins (Set #3): the corresponding timings are specified in Table 6-53 and Table 6-54.
For the McBSP4, these timings concern only Set #2 (multiplexing mode on GPMC pins).

(2) See Section 4.3.4, *Processor Clocks*.

Copyright © 2010–2011, Texas Instruments Incorporated

Table 6-58. McBSP3 (Set #1), 4 (Set #2), and 5 Switching Characteristics—Rising Edge and Transmit Mode(1) (2)

NO.	PARAMETER			OPP100		OPP50		UNIT
				MIN	MAX	MIN	MAX	
B2	$t_{d(CLKXAE-FSXV)}$	Delay time, mcbspx_clkx active edge to mcbspx_fsx valid		0.7	22.18	0.7	44.37	ns
B8	$t_{d(CLKXAE-DXV)}$	Delay time, mcbspx_clkx active edge to mcbspx_dx valid	Master	0.6	21.28	0.6	43.47	ns
			Slave	0.6	21.28	0.6	43.47	ns

(1) In mcbspx, x identifies the McBSP number: 3, 4, or 5. Note that for the McBSP3, these timings concern only Set #1: multiplexing mode by default. The McBSP3 is also multiplexed on UART pins (Set #2) and on McBSP1 pins (Set #3): the corresponding timings are specified in Table 6-53 and Table 6-54.
For the McBSP4, these timings concern only Set #2 (multiplexing mode on GPMC pins).

(2) See Section 4.3.4, *Processor Clocks*.

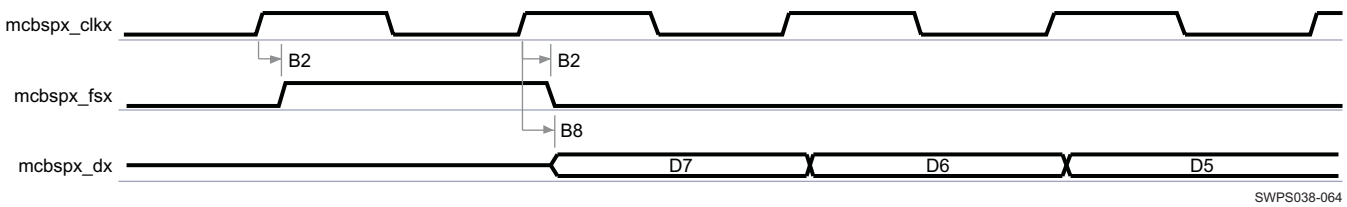

(1) In mcbspx, x identifies the McBSP number: 1, 2, 3, 4, or 5.

Figure 6-38. McBSP Rising Edge Transmit Timing in Master Mode

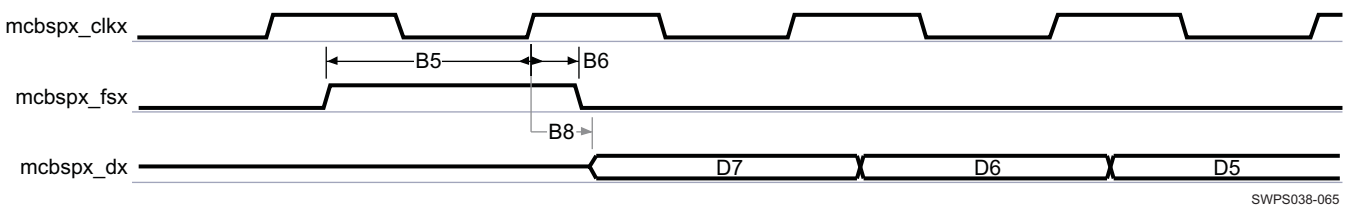

(1) In mcbspx, x identifies the McBSP number: 1, 2, 3, 4, or 5.

Figure 6-39. McBSP Rising Edge Transmit Timing in Slave Mode

6.6.1.1.2 Falling Edge as Activation Edge

6.6.1.1.2.1 Timing with Falling Edge as Activation Edge Mode—Receive Mode

Table 6-59. McBSP1, 2, 3 (Sets #2 and #3) Timing Requirements—Falling Edge and Receive Mode(1) (2)

NO.	PARAMETER			OPP100		OPP50		UNIT
				MIN	MAX	MIN	MAX	
B3	$t_{su(DRV-CLKAE)}$	Setup time, mcbspx_dr valid before mcbsp1_clkr / mcbspx_clkx active edge	Master	4.36		8.63		ns
			Slave	3.67		7.94		ns
B4	$t_{h(CLKAE-DRV)}$	Hold time, mcbspx_dr valid after mcbsp1_clkr / mcbspx_clkx active edge	Master	1.01		1.01		ns
			Slave	0.4		0.4		ns
B5	$t_{su(FSV-CLKAE)}$	Setup time, mcbsp1_fsr / mcbspx_fsx valid before mcbsp1_clkr / mcbspx_clkx active edge		3.7		7.94		ns
B6	$t_{h(CLKAE-FSV)}$	Hold time, mcbsp1_fsr / mcbspx_fsx valid after mcbsp1_clkr / mcbspx_clkx active edge		0.5		0.5		ns

(1) In mcbspx, x identifies the McBSP number: 1, 2, or 3. Note that for the McBSP3, these timings concern only Set #2 (multiplexing mode on UART pins) and Set #3 (multiplexing mode on McBSP1 pins).

(2) See Section 4.3.4, *Processor Clocks*.

Table 6-60. McBSP1, 2, and 3 (Sets #2 and #3) Switching Characteristics—Falling Edge and Receive Mode[(1) (2)]

NO.	PARAMETER		OPP100		OPP50		UNIT
			MIN	MAX	MIN	MAX	
B2	$t_{d(CLKAE-FSV)}$	Delay time, mcbsp1_clkr / mcbspx_clkx active edge to mcbsp1_fsr / mcbspx_fsx valid	0.7	14.79	0.7	29.58	ns

(1) In mcbspx, x identifies the McBSP number: 1, 2, or 3. Note that for the McBSP3, these timings concern only Set #2 (multiplexing mode on UART pins) and Set #3 (multiplexing mode on McBSP1 pins).

(2) See Section 4.3.4, *Processor Clocks*.

Table 6-61. McBSP4 (Set #1) Timing Requirements—Falling Edge and Receive Mode[(1) (2)]

NO.	PARAMETER			OPP100		OPP50		UNIT
				MIN	MAX	MIN	MAX	
B3	$t_{su(DRV-CLKXAE)}$	Setup time, mcbspx_dr valid before mcbspx_clkx active edge	Master	2.87		8.63		ns
			Slave	3.67		7.94		ns
B4	$t_{h(CLKXAE-DRV)}$	Hold time, mcbspx_dr valid after mcbspx_clkx active edge	Master	1.01		1.01		ns
			Slave	0.4		0.4		ns
B5	$t_{su(FSXV-CLKXAE)}$	Setup time, mcbspx_fsx valid before mcbspx_clkx active edge		3.67		7.94		ns
B6	$t_{h(CLKXAE-FSXV)}$	Hold time, mcbspx_fsx valid after mcbspx_clkx active edge		0.5		0.5		ns

(1) In mcbspx, x identifies the McBSP number: 4. Note that for the McBSP4, these timings concern only Set #1: multiplexing mode by default. The McBSP4 is also multiplexed on GPMC pins (Set #2): the corresponding timings are specified in Table 6-63 and Table 6-64.

(2) See Section 4.3.4, *Processor Clocks*.

Table 6-62. McBSP4 (Set #1) Switching Characteristics—Falling Edge and Receive Mode[(1) (2)]

NO.	PARAMETER		OPP100		OPP50		UNIT
			MIN	MAX	MIN	MAX	
B2	$t_{d(CLKXAE-FSXV)}$	Delay time, mcbspx_clkx active edge to mcbspx_fsx valid	0.7	16.56	0.7	33.12	ns

(1) In mcbspx, x identifies the McBSP number: 4. Note that for the McBSP4, these timings concern only Set #1: multiplexing mode by default. The McBSP4 is also multiplexed on GPMC pins (Set #2): the corresponding timings are specified in Table 6-63 and Table 6-64.

(2) See Section 4.3.4, *Processor Clocks*.

Table 6-63. McBSP3 (Set #1), 4 (Set #2), and 5 Timing Requirements—Falling Edge and Receive Mode[(1) (2)]

NO.	PARAMETER			OPP100		OPP50		UNIT
				MIN	MAX	MIN	MAX	
B3	$t_{su(DRV-CLKXAE)}$	Setup time, mcbspx_dr valid before mcbspx_clkx active edge	Master	6.5		12.9		ns
			Slave	5.81		12.21		ns
B4	$t_{h(CLKXAE-DRV)}$	Hold time, mcbspx_dr valid after mcbspx_clkx active edge	Master	1.01		1.01		ns
			Slave	0.4		0.4		ns
B5	$t_{su(FSXV-CLKXAE)}$	Setup time, mcbspx_fsx valid before mcbspx_clkx active edge		5.81		12.21		ns
B6	$t_{h(CLKXAE-FSXV)}$	Hold time, mcbspx_fsx valid after mcbspx_clkx active edge		0.5		0.5		ns

Copyright © 2010–2011, Texas Instruments Incorporated

(1) In mcbspx, x identifies the McBSP number: 3, 4, or 5. Note that for the McBSP3, these timings concern only Set #1: multiplexing mode by default. The McBSP3 is also multiplexed on UART pins (Set #2) and on McBSP1 pins (Set #3): the corresponding timings are specified in Table 6-59 and Table 6-60.
For the McBSP4, these timings concern only Set #2 (multiplexing mode on GPMC pins).

(2) See Section 4.3.4, *Processor Clocks*.

Table 6-64. McBSP3 (Set #1), 4 (Set #2), and 5 Switching Characteristics—Falling Edge and Receive Mode(1) (2)

NO.	PARAMETER		OPP100		OPP50		UNIT
			MIN	MAX	MIN	MAX	
B2	$t_{d(CLKXAE-FSXV)}$	Delay time, mcbspx_clkx active edge to mcbspx_fsx valid	0.7	22.19	0.7	44.37	ns

(1) In mcbspx, x identifies the McBSP number: 3, 4, or 5. Note that for the McBSP3, these timings concern only Set #1: multiplexing mode by default. The McBSP3 is also multiplexed on UART pins (Set #2) and on McBSP1 pins (Set #3): the corresponding timings are specified in Table 6-59 and Table 6-60.

(2) See Section 4.3.4, *Processor Clocks*.

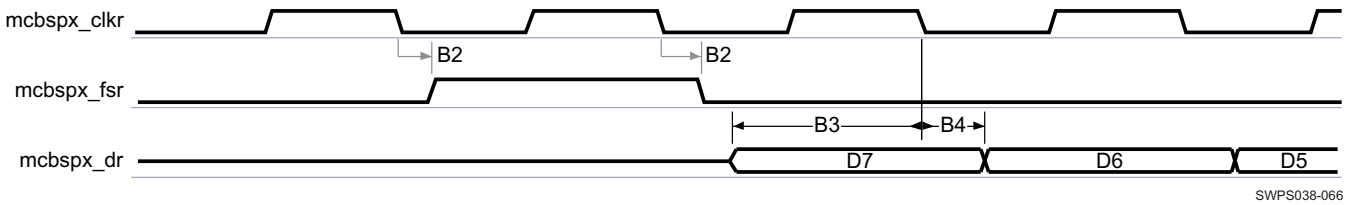

(1) In mcbspx, x identifies the McBSP number: 1, 2, 3, 4, or 5.

Figure 6-40. McBSP Falling Edge Receive Timing in Master Mode

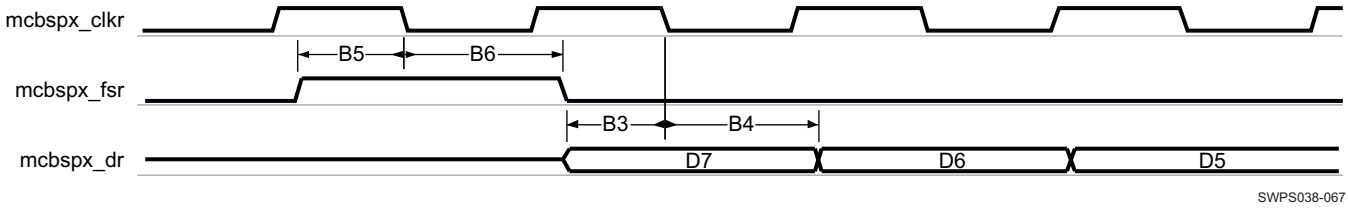

(1) In mcbspx, x identifies the McBSP number: 1, 2, 3, 4, or 5.

Figure 6-41. McBSP Falling Edge Receive Timing in Slave Mode

6.6.1.1.2.2 Timing with Falling Edge as Activation Edge—Transmit Mode

Table 6-65. McBSP1, 2, and 3 (Sets #2 and #3) Timing Requirements—Falling Edge and Transmit Mode(1)(2)

NO.	PARAMETER		OPP100		OPP50		UNIT
			MIN	MAX	MIN	MAX	
B5	$t_{su(FSXV-CLKXAE)}$	Setup time, mcbspx_fsx valid before mcbspx_clkx active edge	3.67		7.94		ns
B6	$t_{h(CLKXAE-FSXV)}$	Hold time, mcbspx_fsx valid after mcbspx_clkx active edge	0.5		0.5		ns

(1) In mcbspx, x identifies the McBSP number: 1, 2, or 3. Note that for the McBSP3, these timings concern only Set #2 (multiplexing mode on UART pins) and Set #3 (multiplexing mode on McBSP1 pins).

(2) See Section 4.3.4, *Processor Clocks*.

Table 6-66. McBSP1, 2, and 3 (Sets #2 and #3) Switching Characteristics—Falling Edge and Transmit Mode[(1)(2)]

NO.	PARAMETER			OPP100		OPP50		UNIT
				MIN	MAX	MIN	MAX	
B2	$t_{d(CLKXAE-FSXV)}$	Delay time, mcbspx_clkx active edge to mcbspx_fsx valid		0.7	14.79	0.7	29.58	ns
B8	$t_{d(CLKXAE-DXV)}$	Delay time, mcbspx_clkx active edge to mcbspx_dx valid	Master	0.6	14.79	0.6	29.58	ns
			Slave	0.6	13.89	0.6	28.68	ns

(1) In mcbspx, x identifies the McBSP number: 1, 2, or 3. Note that for the McBSP3, these timings concern only Set #2 (multiplexing mode on UART pins) and Set #3 (multiplexing mode on McBSP1 pins).

(2) See Section 4.3.4, *Processor Clocks*.

Table 6-67. McBSP4 (Set #1) Timing Requirements—Falling Edge and Transmit Mode[(1)(2)]

NO.	PARAMETER		OPP100		OPP50		UNIT
			MIN	MAX	MIN	MAX	
B5	$t_{su(FSXV-CLKXAE)}$	Setup time, mcbspx_fsx valid before mcbspx_clkx active edge	3.67		7.94		ns
B6	$t_{h(CLKXAE-FSXV)}$	Hold time, mcbspx_fsx valid after mcbspx_clkx active edge	0.5		0.5		ns

(1) In mcbspx, x identifies the McBSP number: 4. Note that for the McBSP4, these timings concern only Set #1: multiplexing mode by default. The McBSP4 is also multiplexed on GPMC pins (Set #2): the corresponding timings are specified in Table 6-69 and Table 6-70.

(2) See Section 4.3.4, *Processor Clocks*.

Table 6-68. McBSP4 (Set #1) Switching Characteristics—Falling Edge and Transmit Mode[(1) (2)]

NO.	PARAMETER			OPP100		OPP50		UNIT
				MIN	MAX	MIN	MAX	
B2	$t_{d(CLKXAE-FSXV)}$	Delay time, mcbspx_clkx active edge to mcbspx_fsx valid		0.7	16.56	0.7	33.12	ns
B8	$t_{d(CLKXAE-DXV)}$	Delay time, mcbspx_clkx active edge to mcbspx_dx valid	Master	0.6	16.56	0.6	33.12	ns
			Slave	0.6	17.15	0.6	32.22	ns

(1) In mcbspx, x identifies the McBSP number: 4. Note that for the McBSP4, these timings concern only Set #1: multiplexing mode by default. The McBSP4 is also multiplexed on GPMC pins (Set #2): the corresponding timings are specified in Table 6-69 and Table 6-70.

(2) See Section 4.3.4, *Processor Clocks*.

Table 6-69. McBSP3 (Set #1), 4 (Set #2), and 5 Timing Requirements—Falling Edge and Transmit Mode[(1)(2)]

NO.	PARAMETER		OPP100		OPP50		UNIT
			MIN	MAX	MIN	MAX	
B5	$t_{su(FSXV-CLKXAE)}$	Setup time, mcbspx_fsx valid before mcbspx_clkx active edge	5.81		12.21		ns
B6	$t_{h(CLKXAE-FSXV)}$	Hold time, mcbspx_fsx valid after mcbspx_clkx active edge	0.5		0.5		ns

(1) In mcbspx, x identifies the McBSP number: 3, 4, or 5. Note that for the McBSP3, these timings concern only Set #1: multiplexing mode by default. The McBSP3 is also multiplexed on UART pins (Set #2) and on McBSP1 pins (Set #3): the corresponding timings are specified in Table 6-66 and Table 6-67.
For the McBSP4, these timings concern only Set #2 (multiplexing mode on GPMC pins).

(2) See Section 4.3.4, *Processor Clocks*.

Copyright © 2010–2011, Texas Instruments Incorporated

Table 6-70. McBSP3 (Set #1), 4 (Set #2), and 5 Switching Characteristics—Falling Edge and Transmit Mode[(1) (2)]

NO.	PARAMETER			OPP100		OPP50		UNIT
				MIN	MAX	MIN	MAX	
B2	$t_{d(CLKXAE-FSXV)}$	Delay time, mcbspx_clkx active edge to mcbspx_fsx valid		0.7	22.18	0.7	44.37	ns
B8	$t_{d(CLKXAE-DXV)}$	Delay time, mcbspx_clkx active edge to mcbspx_dx valid	Master	0.6	21.28	0.6	43.47	ns
			Slave	0.6	21.28	0.6	43.47	ns

(1) In mcbspx, x identifies the McBSP number: 3, 4, or 5. Note that for the McBSP3, these timings concern only Set #1: multiplexing mode by default. The McBSP3 is also multiplexed on UART pins (Set #2) and on McBSP1 pins (Set #3): the corresponding timings are specified in Table 6-66 and Table 6-67.
For the McBSP4, these timings concern only Set #2 (multiplexing mode on GPMC pins).

(2) See Section 4.3.4, *Processor Clocks*.

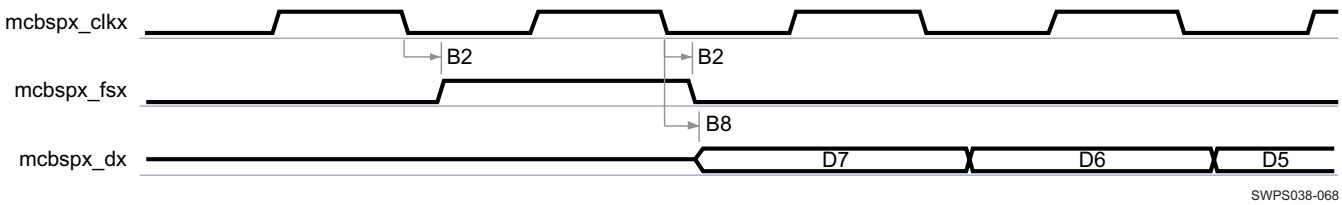

(1) In mcbspx, x identifies the McBSP number: 1, 2, 3, 4, or 5.

Figure 6-42. McBSP Falling Edge Transmit Timing in Master Mode

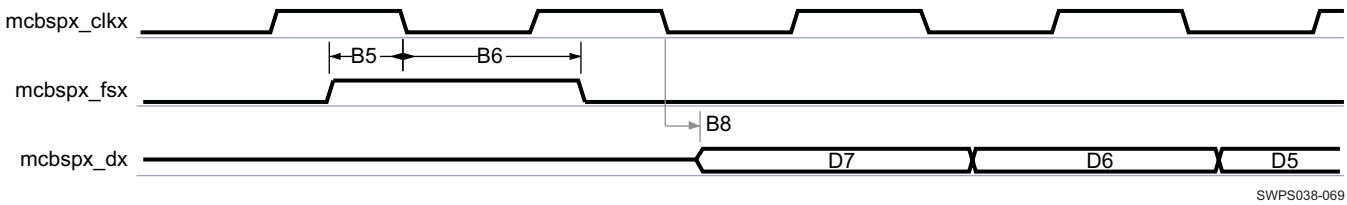

(1) In mcbspx, x identifies the McBSP number: 1, 2, 3, 4, or 5.

Figure 6-43. McBSP Falling Edge Transmit Timing in Slave Mode

6.6.1.2 McBSP in TDM —Multipoint Mode (McBSP3)

For T application in multipoint mode, the processor is considered as a slave. Table 6-72 and Table 6-73 assume testing over the operating conditions and electrical characteristic conditions described below.

Table 6-71. McBSP3 (Set #3) Timing Conditions—T Multipoint Mode[(1)]

TIMING CONDITION PARAMETER		VALUE		UNIT
		MIN	MAX	
Input Conditions				
t_R	Input signal rise time	1.0	8.5	ns
t_F	Input signal fall time	1.0	8.5	ns
Output Condition				
C_{LOAD}	Output load capacitance[(2)]		40	pF

(1) For McBSP3, these timings concern only Set #3 (multiplexing mode in McBSP1 pins)

(2) The load setting of the IO buffer: LB0 = 0.

Table 6-72. McBSP3 (Set #3) Timing Requirements—T Multipoint Mode[(4)]

NO.	PARAMETER		OPP100		OPP50		UNIT
			MIN	MAX	MIN	MAX	
	$1 / t_{c(clkxH)}$	Frequency, input clock mcbsp3_clkx		6		6	MHz

Table 6-72. McBSP3 (Set #3) Timing Requirements—T Multipoint Mode[4] (continued)

NO.	PARAMETER		OPP100		OPP50		UNIT
			MIN	MAX	MIN	MAX	
	$t_{w(clkxH)}$	Pulse duration, input clock mcbsp3_clkx high	0.5P[1]		0.5P[1]		ns
	$t_{w(clkxL)}$	Pulse duration, input clock mcbsp3_clkx low	0.5P[1]		0.5P[1]		ns
	$t_{dc(clkx)}$	Duty cycle error, input clock mcbsp3_clkx	–8.14	8.14	–8.14	8.14	ns
B3[3]	$t_{su(drV-clkxAE)}$	Setup time, input data mcbsp3_dr valid before input clock mcbsp3_clkx active edge	9		9		ns
B4[3]	$t_{h(clkxAE-drV)}$	Hold time, input data mcbsp3_dr valid after input clock mcbsp3_clkx active edge	2.4		2.4		ns
B5[3]	$t_{su(fsxV-clkxAE)}$	Setup time, input frame synchronization mcbsp3_fsx valid before input clock mcbsp3_clkx active edge	9		9		ns
B6[3]	$t_{h(clkxAE-fsxV)}$	Hold time, input frame synchronization mcbsp3_fsx valid after input clock mcbsp3_clkx active edge	2.4		2.4		ns

(1) P = input clock mcbsp3_clkx period in ns

(2) For McBSP3, these timings concern only Set #3 (multiplexing mode in McBSP1 pins).

(3) See Section 6.6.1.1 for corresponding figures.

(4) See Section 4.3.4, *Processor Clocks*.

Table 6-73. McBSP3 (Set #3) Switching Characteristics—T Multipoint Mode[1]

NO.	PARAMETER		OPP100		OPP50		UNIT
			MIN	MAX	MIN	MAX	
B8[2]	$t_{d(clkxAE-dxV)}$	Delay time, mcbsp3_clkx active edge to output data mcbsp3_dx valid	0.6	15.89	0.6	28.68	ns

(1) For McBSP3, these timings concern only Set #3 (multiplexing mode in McBSP1 pins).

(2) See Section 6.6.1.1 for corresponding figures.

Copyright © 2010–2011, Texas Instruments Incorporated

6.6.2 Multichannel Serial Port Interface (McSPI)

NOTE

For more information, see Multichannel SPI chapter of the *AM/DM37x Multimedia Device Technical Reference Manual* (literature number SPRUGN4).

McSPI allows a duplex, synchronous, serial communication between a local host and SPI compliant external devices. The following timings are applicable to the different configurations of McSPI in master/slave mode for any McSPI and any channel (n).

6.6.2.1 McSPI—Slave Mode

In slave mode, McSPI initiates data transfer on the data lines (mcspix_somi, mcspix_simo) when it receives an SPI clock (mcspix_clk) from the external SPI master device.

Table 6-75 and Table 6-76 assume testing over the recommended operating conditions and electrical characteristic conditions below (see Figure 6-44 and Figure 6-45).

Table 6-74. McSPI Timing Conditions—Slave Mode

TIMING CONDITION PARAMETER		VALUE	UNIT
Input Conditions			
t_R	Input signal rise time	4	ns
t_F	Input signal fall time	4	ns
Output Condition			
C_{LOAD}	Output load capacitance(1)	20	pF

(1) The load setting of the IO buffer: LB0 = 1.

Table 6-75. McSPI Timing Requirements—Slave Mode(1) (3)

NO.	PARAMETER		OPP100		OPP50		UNIT
			MIN	MAX	MIN	MAX	
SS0	$1/t_{c(CLK)}$	Frequency, mcspix_clk		24		12	MHz
SS1	$t_{w(CLK)}$	Pulse duration, mcspix_clk high or low	0.45*P(2)	0.55*P(2)	0.45*P(2)	0.55*P(2)	ns
SS2	$t_{su(SIMOV-CLKAE)}$	Setup time, mcspix_simo valid before mcspix_clk active edge	4.2		9.5		ns
SS3	$t_{h(SIMOV-CLKAE)}$	Hold time, mcspix_simo valid after mcspix_clk active edge	4.6		9.9		ns
SS4	$t_{su(CS0V-CLKFE)}$	Setup time, mcspix_cs0 valid before mcspix_clk first edge	13.8		28.6		ns
SS5	$t_{h(CS0I-CLKLE)}$	Hold time, mcspix_cs0 invalid after mcspix_clk last edge	13.8		28.6		ns

(1) In mcspix, x is equal to 1, 2, 3, or 4.

(2) P = mcspix_clk clock period

(3) See Section 4.3.4, *Processor Clocks*.

Table 6-76. McSPI Switching Characteristics—Slave Mode[(1) (3) (4)]

NO.	PARAMETER			OPP100		OPP50		UNIT
				MIN	MAX	MIN	MAX	
SS6	$t_{d(CLKAE-SOMIV)}$	Delay time, mcspix_clk active edge to mcspix_somi shifted		1.8	15.9	3.2	31.7	ns
SS7	$t_{d(CS0AE-SOMIV)}$	Delay time, mcspix_cs0 active edge to mcspix_somi shifted	Modes 0 and 2[(2)]		15.9		31.7	ns

(1) In mcspix, x is equal to 1, 2, 3, or 4.

(2) The polarity of mcspix_clk and the active edge (rising or falling) on which mcspix_simo is driven and mcspix_somi is latched is all software configurable:

– mcspix_clk[(1)] phase programmable with the bit PHA of MCSPI_CH(i)CONF register: PHA = 0 (Modes 0 and 2)

For more information, see the McSPI environment chapter, Data Format Configurations section of the *AM/DM37x Multimedia Device Technical Reference Manual* (literature number SPRUGN4) for modes and phase correspondence description.

(3) This timing applies to all configurations regardless of mcspix_clk polarity and which clock edges are used to drive output data and capture input data.

(4) See Section 4.3.4, *Processor Clocks*.

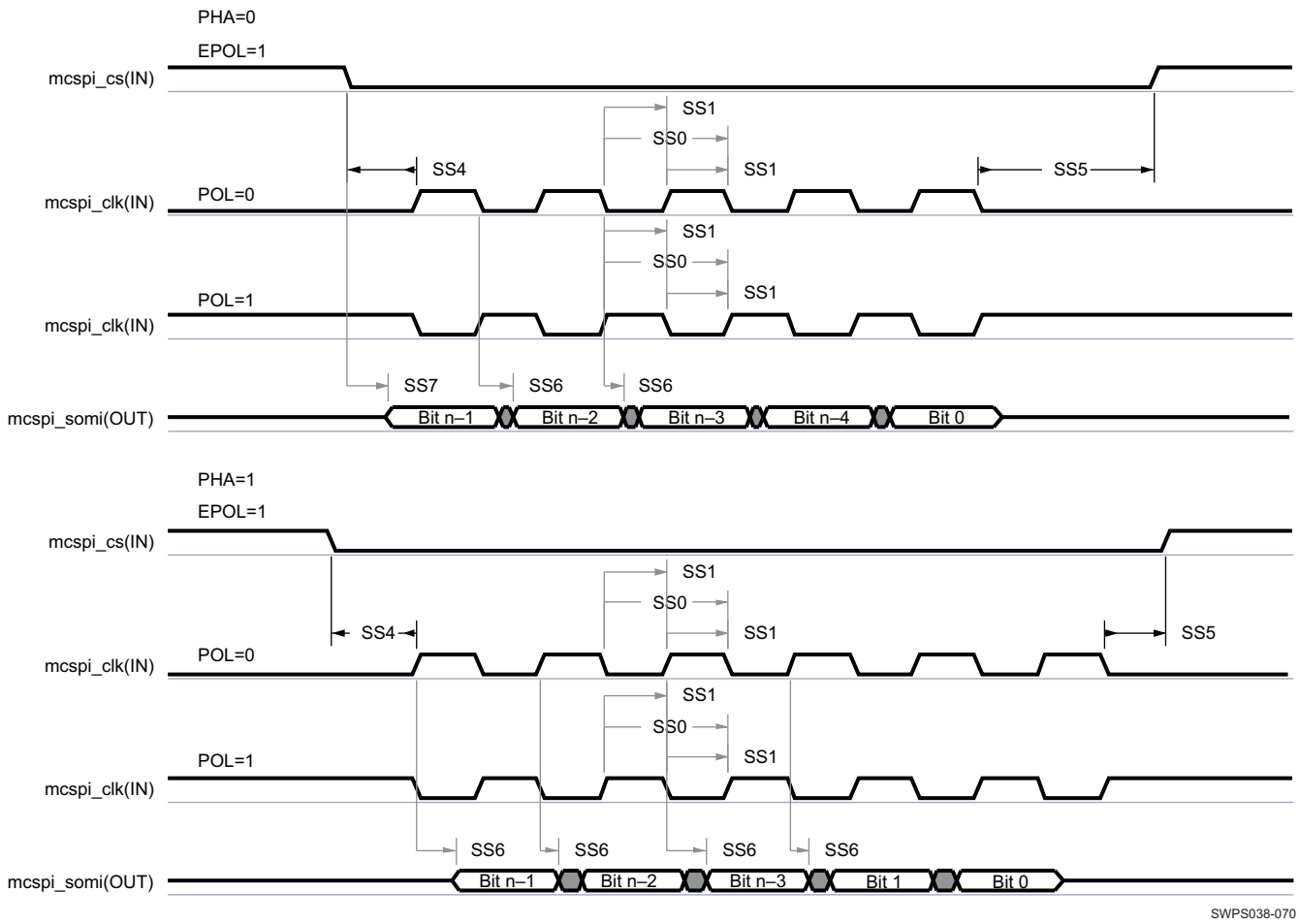

(1) The active clock edge selection of mcspi_clk (rising or falling) on which mcspi_simo is driven and mcspi_somi data is latched is software configurable with the bit MCSPI_CH(i)CONF[1] = POL and the bit MCSPI_CH(i)CONF[0] = PHA.

(2) The polarity of mcspi_cs is software configurable with the bit MCSPI_CH(i)CONF[6] = EPOL.

Figure 6-44. McSPI—Slave Mode—Transmit

Copyright © 2010–2011, Texas Instruments Incorporated

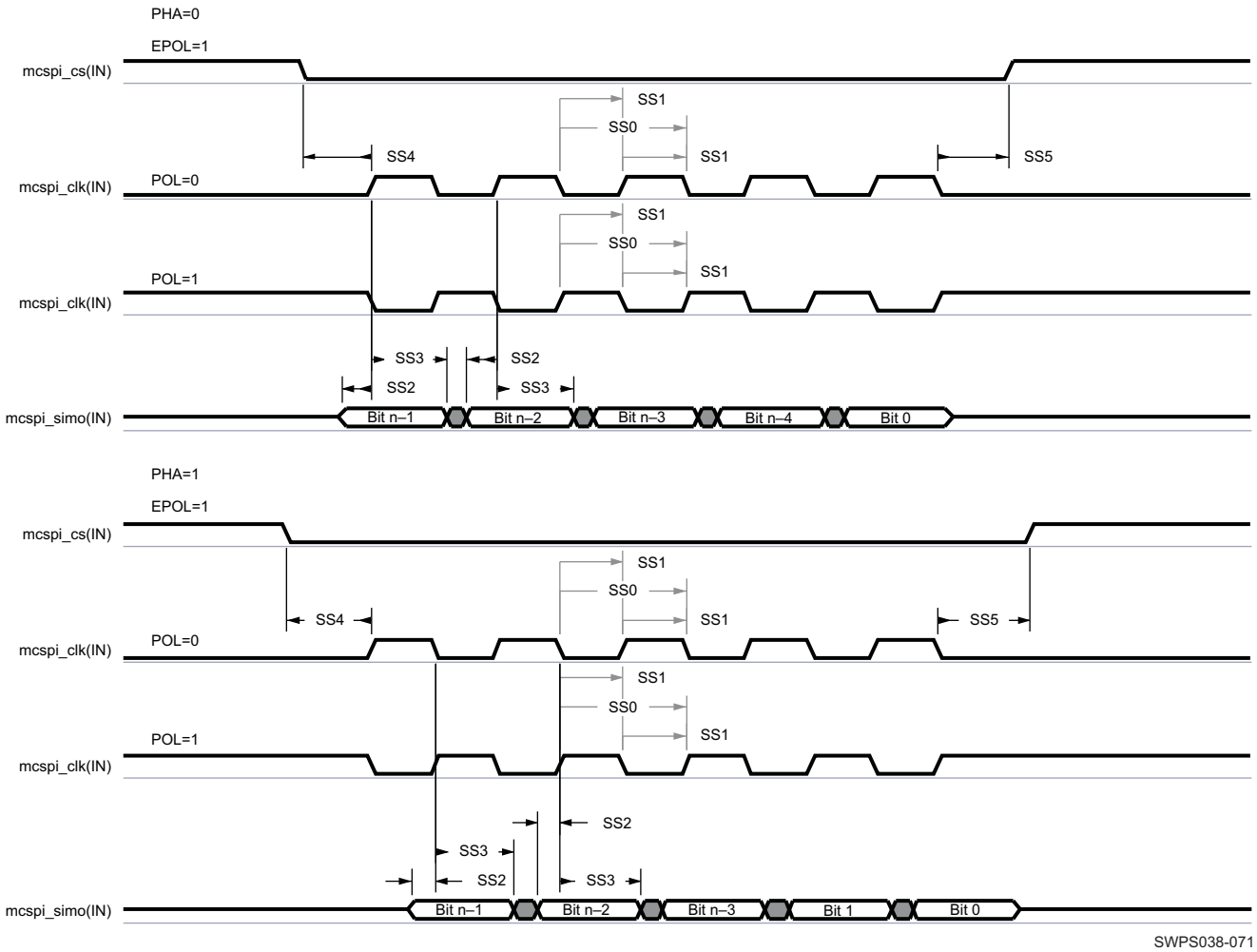

(1) The active clock edge selection of mcspi_clk (rising or falling) on which mcspi_simo is driven and mcspi_somi data is latched is software configurable with the bit MCSPI_CH(i)CONF[1] = POL and the bit MCSPI_CH(i)CONF[0] = PHA.

(2) The polarity of mcspi_cs is software configuable with the bit MCSPI_CH(i)CONF[6] = EPOL.

Figure 6-45. McSPI—Slave Mode—Receive

6.6.2.2 McSPI—Master Mode

In master mode, McSPI supports multichannel communication. McSPI initiates a data transfer on the data lines (SPIDAT [1:0]) and generates clock (SPICLK) and control signals (SPIEN) to a single SPI slave device at a time.

Table 6-78 and Table 6-81 assume testing over the recommended operating conditions and electrical characteristic conditions below (see Figure 6-46 and Figure 6-47).

Table 6-77. McSPI Timing Conditions—Master Mode[(1)]

TIMING CONDITION PARAMETER		VALUE		UNIT
		MIN	MAX	
Input Conditions				
t_R	Input signal rise time	4		ns
t_F	Input signal fall time	4		ns
Output Conditions				
McSPI1, McSPI2, McSPI3, and McSPI4				
C_{LOAD}	Output load capacitance for spix_csn signals		20	pF
McSPI2 and McSPI3				
C_{LOAD}	Output load capacitance for spix_clk and spix_simo		30	pF
McSPI1 and McSPI4				
C_{LOAD}	Output load capacitance for spix_clk and spix_simo		20	pF

(1) Buffer strength configuration: LB0 = 1.

Table 6-78. McSPI1, 2, and 4 Timing Requirements—Master Mode[(1) (2)]

NO.	PARAMETER		OPP100		OPP50		UNIT
			MIN	MAX	MIN	MAX	
SM2	$t_{su(SOMIV-CLKAE)}$	Setup time, mcspix_somi valid before mcspix_clk active edge	1.1		1.5		ns
SM3	$t_{h(SOMIV-CLKAE)}$	Hold time, mcspix_somi valid after mcspix_clk active edge	1.9		2.8		ns

(1) In mcspix, x is equal to 1, 2, or 4. In mcspix_csn, n is equal to 0, 1, 2, or 3 for x equal to 1, n is equal to 0 or 1 for x equal to 2 and 4.

(2) See Section 4.3.4, *Processor Clocks*.

Table 6-79. McSPI1, 2, and 4 Switching Characteristics—Master Mode[(1) (6)]

NO.	PARAMETER			OPP100		OPP50		UNIT
				MIN	MAX	MIN	MAX	
SM0	$1/t_{c(CLK)}$	Frequency, mcspix_clk			48		24	MHz
SM1	$t_{w(CLK)}$	Pulse duration, mcspix_clk high or low		0.45*P[(3)]	0.55*P[(3)]	0.45*P[(3)]	0.55*P[(3)]	ns
	$t_{R(clk)}$	Rise time, output clock mcspi1_clk and mcspi4_clk			5.72		5.68	ns
		Rise time, output clock mcspi2_clk			7.33		7.31	
	$t_{F(clk)}$	Fall time, output clock mcspi1_clk and mcspi4_clk			5.22		5.21	ns
		Fall time, output clock mcspi2_clk			6.77		6.71	
SM4	$t_{d(CLKAE-SIMOV)}$	Delay time, mcspix_clk active edge to mcspix_simo shifted		–2.1	5.0	–2.1	11.3	ns
SM5	$t_{d(CSnA-CLKFE)}$	Delay time, mcspix_csi active to mcspix_clk first edge	Modes 1 and 3[(2)]	A[(4)] – 3.2		A[(4)] – 4.4		ns
			Modes 0 and 2[(2)]	B[(5)] – 3.2		B[(5)] – 4.4		ns
SM6	$t_{d(CLKLE-CSnI)}$	Delay time, mcspix_clk last edge to mcspix_csi inactive	Modes 1 and 3[(2)]	B[(5)] – 3.2		B[(5)] – 4.4		ns
			Modes 0 and 2[(2)]	A[(4)] – 3.2		A[(4)] – 4.4		ns
SM7	$t_{d(CSnAE-SIMOV)}$	Delay time, mcspix_csi active edge to mcspix_simo shifted			5.0		11.3	ns

Copyright © 2010–2011, Texas Instruments Incorporated

(1) In mcspix, x is equal to 1, 2, or 4. In mcspix_csn, n is equal to 0, 1, 2, or 3 for x equal to 1, n is equal to 0 or 1 for x equal to 2 and 4.

(2) The polarity of mcspix_clk and the active edge (rising or falling) on which mcspix_simo is driven and mcspix_somi is latched is all software configurable:
- mcspix_clk[(1)] phase programmable with the bit PHA of MCSPI_CH(i)CONF register: PHA = 1 (Modes 1 and 3).
- mcspix_clk[(1)] phase programmable with the bit PHA of MCSPI_CH(i)CONF register: PHA = 0 (Modes 0 and 2).

For more information, see the McSPI environment chapter, Data Format Configurations section of the *AM/DM37x Multimedia Device Technical Reference Manual* (literature number SPRUGN4) for modes and phase correspondence description.

(3) P = mcspix_clk clock period

(4) Case P = 20.8 ns, A = (TCS+0.5)*P[(3)] (TCS is a bit field of MSPI_CHCONFx[26:25] register).
Case P > 20.8 ns, A = TCS*P[(3)] (TCS is a bitfield of MSPI_CHCONFx[26:25] register). For more information, see the McSPI chapter of the *AM/DM37x Multimedia Device Technical Reference Manual* (literature number SPRUGN4).

(5) B = TCS*P[(3)] (TCS is a bit field of MSPI_CHCONFx[26:25] register). For more information, see the McSPI chapter of the *AM/DM37x Multimedia Device Technical Reference Manual* (literature number SPRUGN4).

(6) See Section 4.3.4, *Processor Clocks*.

Table 6-80. McSPI3 Timing Requirements—Master Mode[(1)]

NO.	PARAMETER		OPP100		OPP50		UNIT
			MIN	MAX	MIN	MAX	
SM2	$t_{su(SOMIV-CLKAE)}$	Setup time, mcspi3_somi valid before mcspi3_clk active edge	1.5		4.3		ns
SM3	$t_{h(SOMIV-CLKAE)}$	Hold time, mcspi3_somi valid after mcspi3_clk active edge	2.8		5.9		ns

(1) See Section 4.3.4, *Processor Clocks*.

Table 6-81. McSPI3 Switching Characteristics—Master Mode[(1) (2) (6)]

NO.	PARAMETER			OPP100		OPP50		UNIT
				MIN	MAX	MIN	MAX	
SM0	$1/t_{c(CLK)}$	Frequency, mcspi3_clk			24		12	MHz
SM1	$t_{w(CLKH)}$	Pulse duration, mcspi3_clk high or low		0.45*P[(3)]	0.55*P[(3)]	0.45*P[(3)]	0.55*P[(3)]	ns
	$t_{R(clk)}$	Rise time, output clock mcspi3_clk	CBP Balls: AE2 / AE13		7.33		7.31	ns
			CBP Ball: H26		4.31		4.30	
	$t_{F(clk)}$	Fall time, output clock mcspi3_clk	CBP Balls: AE2 / AE13		6.77		6.71	ns
			CBP Ball: H26		4.0		4.0	
SM4	$t_{d(CLK-SIMO)}$	Delay time, mcspi3_clk active edge to mcspi3_simo shifted		–2.1	11.3	–5.3	23.6	ns
SM5	$t_{d(CSn-CLK)}$	Delay time, mcspi3_csi active to mcspi3_clk first edge	Modes 1 and 3	A[(4)] – 4.4		A[(4)] – 10.1		ns
			Modes 0 and 2	B[(5)] – 4.4		B[(5)] – 10.1		ns
SM6	$t_{d(CLK-CSn)}$	Delay time, mcspi3_clk last edge to mcspi3_csi inactive	Modes 1 and 3	B[(5)] – 4.4		B[(5)] – 10.1		ns
			Modes 0 and 2	A[(4)] – 4.4		A[(4)] – 10.1		ns
SM7	$t_{d(csn-simo)}$	Delay time, mcspi3_csi active edge to mcspi3_simo shifted	Modes 0 and 2		11.3		23.6	ns

Copyright © 2010–2011, Texas Instruments Incorporated

(1) In mcspi3_csn, n is equal to 0 or 1. The polarity of mcspi3_clk and the active edge (rising or falling) on which mcspi3_simo is driven and mcspi3_somi is latched is all software configurable.
   – mcspi3_clk phase programmable with the bit PHA of MCSPI_CH(i)CONF register: PHA = 1 (Modes 1 and 3).
   – mcspi3_clk phase programmable with the bit PHA of MCSPI_CH(i)CONF register: PHA = 0 (Modes 0 and 2).
   For more information, see the McSPI environment chapter, Data Format Configurations section of the *AM/DM37x Multimedia Device Technical Reference Manual* (literature number SPRUGN4) for modes and phase correspondence description.

(2) This timing applies to all configurations regardless of McSPI3_CLK polarity and which clock edges are used to drive output data and capture input data.

(3) P = mcspi3_clk clock period

(4) Case P = 20.8 ns, A = (TCS + 0.5)*P[(3)] (TCS is a bit field of MSPI_CHCONFx[26:25] register).
   Case P > 20.8 ns, A = TCS*P[(3)] (TCS is a bit field of MSPI_CHCONFx[26:25] register). For more information, see the McSPI chapter of *AM/DM37x Multimedia Device Technical Reference Manual* (literature number SPRUGN4).

(5) B = TCS*P[(3)] (TCS is a bit field of MSPI_CHCONFx[26:25] register). For more information, see the McSPI chapter of *AM/DM37x Multimedia Device Technical Reference Manual* (literature number SPRUGN4).

(6) See Section 4.3.4, *Processor Clocks*.

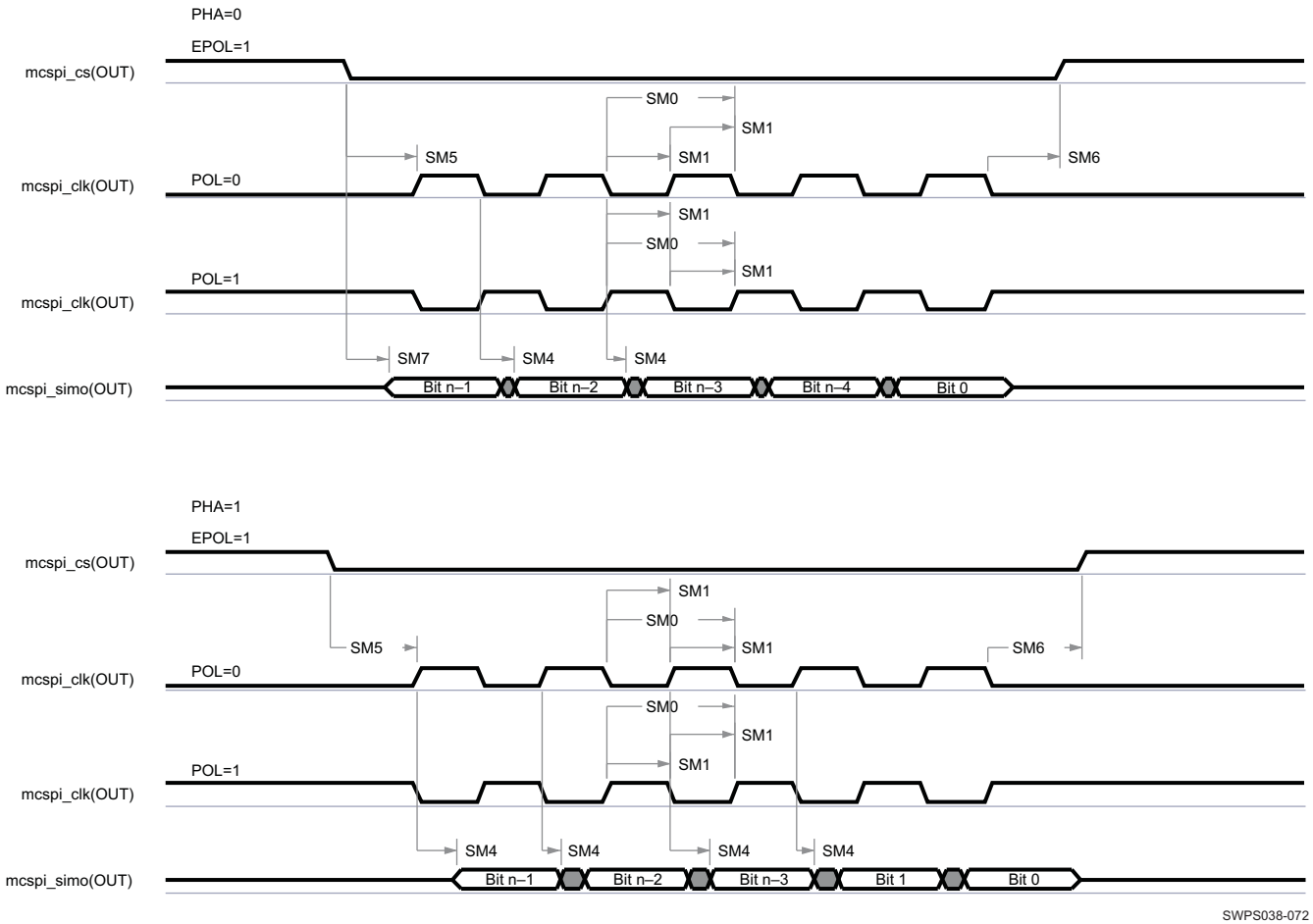

(1) The active clock edge selection of mcspi_clk (rising or falling) on which mcspi_simo is driven and mcspi_somi data is latched is software configurable with the bit MCSPI_CH(i)CONF[1] = POL and the bit MCSPI_CH(i)CONF[0] = PHA.

(2) The polarity of mcspi_ncs is software configuable with the bit MCSPI_CH(i)CONF[6] = EPOL.

Figure 6-46. McSPI—Master Mode—Transmit

Copyright © 2010–2011, Texas Instruments Incorporated

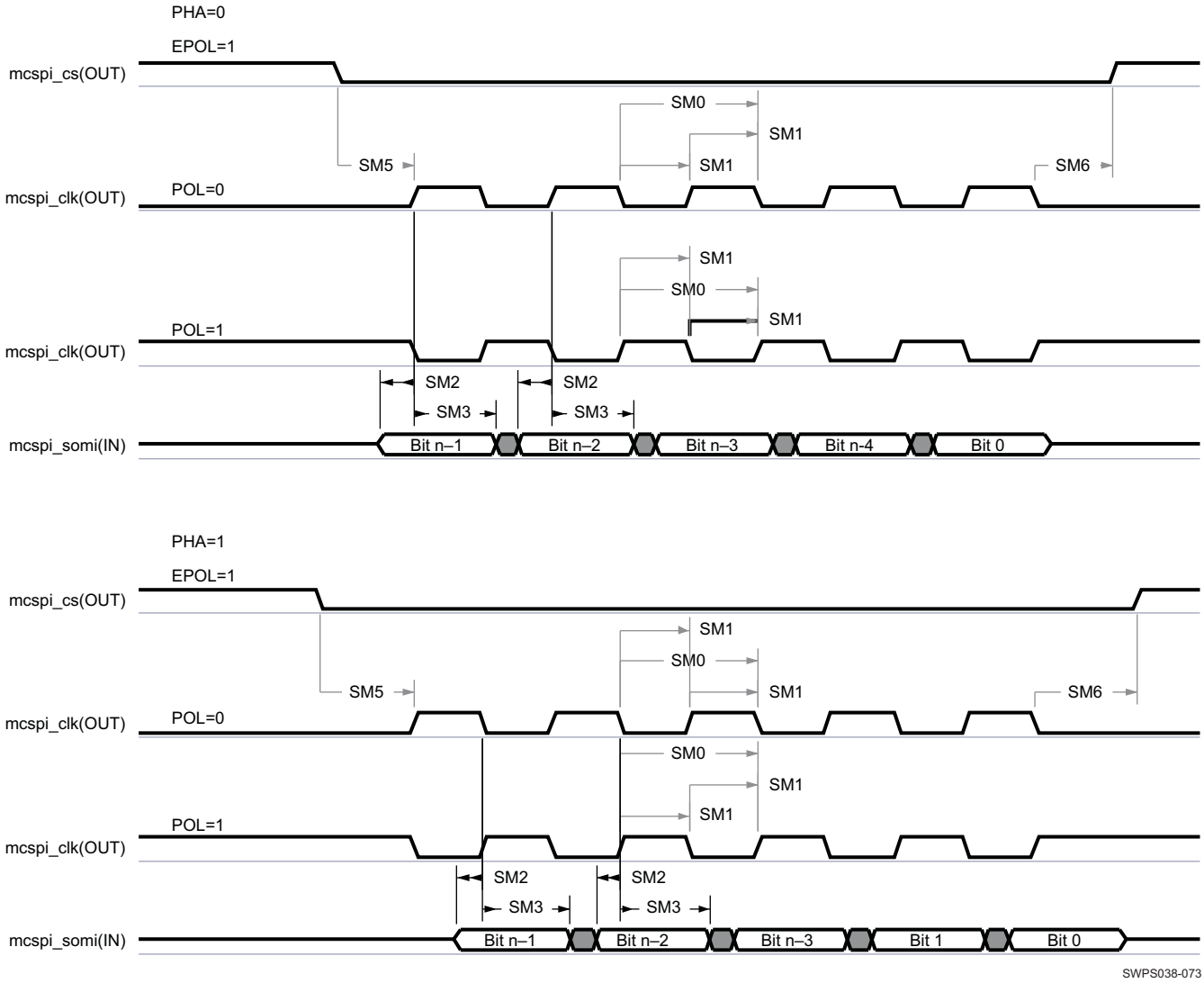

(1) The active clock edge selection of mcspi_clk (rising or falling) on which mcspi_simo is driven and mcspi_somi data is latched is software configurable with the bit MCSPI_CH(i)CONF[1] = POL and the bit MCSPI_CH(i)CONF[0] = PHA.

(2) The polarity of mcspi_ncs is software configuable with the bit MCSPI_CH(i)CONF[6] = EPOL.

Figure 6-47. McSPI—Master Mode—Receive

6.6.3 Multiport Full-Speed Universal Serial Bus (FS-USB)

NOTE

For more information, see High-Speed USB Host Subsystem and High-Speed USB OTG Controller / High-Speed USB Host Subsystem section of the *AM/DM37x Multimedia Device Technical Reference Manual* (literature number SPRUGN4).

The processor provides three USB ports working in full- and low-speed data transactions (up to 12Mbit/s). When connected to either a serial link controller or a serial PHY (PHY interface modes) it supports:

- 6-pin (Tx: Dat/Se0 or Tx: Dp/) unidirectional mode
- 4-pin bidirectional mode
- 3-pin bidirectional

6.6.3.1 FS-USB—Unidirectional Standard 6-pin Mode

Table 6-83 and Table 6-84 assume testing over the recommended operating conditions and electrical characteristic conditions below (see Figure 6-48).

Table 6-82. LS- / FS-USB Timing Conditions—Unidirectional Standard 6-Pin Mode

TIMING CONDITION PARAMETER		VALUE	UNIT
Input Conditions			
t_R	Input signal rise time	2	ns
t_F	Input signal fall time	2	ns
Output Condition			
C_{LOAD}	Output load capacitance(1)	15	pF

(1) Buffer strength configuration: LB0 = 1.

Table 6-83. LS- / FS-USB Timing Requirements—Unidirectional Standard 6-Pin Mode(1) (2)

NO.	PARAMETER		OPP100		OPP50		UNIT
			MIN	MAX	MIN	MAX	
FSU1	$t_{d(vp,vm)}$	Time duration, mmx_rxdp and mmx_rx low together during transition		14		14	ns
FSU2	$t_{d(vp,vm)}$	Time duration, mmx_rxdp and mmx_rx high together during transition		8		8	ns
FSU3	$t_{d(rcvU0)}$	Time duration, mmx_rrxcv undefine during a single end 0 (mmx_rxdp and mmx_rx low together)		14		14	ns
FSU4	$t_{d(rcvU1)}$	Time duration, mmx_rxrcv undefine during a single end 1 (mmx_rxdp and mmx_rx high together)		8		8	ns

(1) In mmx, x is equal to 0, 1, or 2.

(2) See Section 4.3.4, *Processor Clocks*.

Table 6-84. LS- / FS-USB Switching Characteristics—Unidirectional Standard 6-Pin Mode(1) (2)

NO.	PARAMETER		OPP100		OPP50		UNIT
			MIN	MAX	MIN	MAX	
FSU5	$t_{d(txenL-dV)}$	Delay time, mmx_txen_n low to mmx_txdat valid	81.8	84.8	81.8	84.8	ns
FSU6	$t_{d(txenL-se0V)}$	Delay time, mmx_txen_n low to mmx_txse0 valid	81.8	84.8	81.8	84.8	ns
FSU7	$t_{s(d-se0)}$	Skew between mmx_txdat and mmx_txse0 transition		1.5		1.5	ns
FSU8	$t_{d(dI-txenH)}$	Delay time, mmx_txdat invalid to mmx_txen_n high	81.8		81.8		ns
FSU9	$t_{d(se0I-txenH)}$	Delay time, mmx_txse0 invalid to mmx_txen_n high	81.8		81.8		ns

(1) In mmx, x is equal to 0, 1, or 2.

(2) See Section 4.3.4, *Processor Clocks*.

Copyright © 2010–2011, Texas Instruments Incorporated

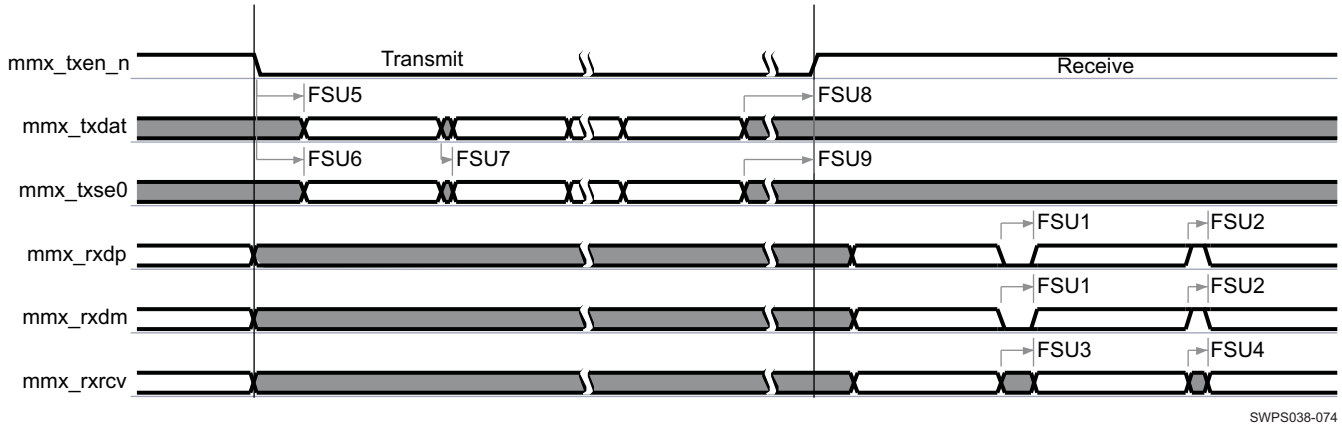

(1) In mmx, x is equal to 0, 1, or 2.

Figure 6-48. LS- / FS-USB—Unidirectional Standard 6-Pin Mode

6.6.3.2 FS-USB—Bidirectional Standard 4-pin Mode

Table 6-86 and Table 6-87 assume testing over the recommended operating conditions and electrical characteristic conditions below (see Figure 6-49).

Table 6-85. LS- / FS-USB Timing Conditions—Bidirectional Standard 4-Pin Mode

TIMING CONDITION PARAMETER		VALUE	UNIT
Input Conditions			
t_R	Input signal rise time	2	ns
t_F	Input signal fall time	2	ns
Output Condition			
C_{LOAD}	Output load capacitance(1)	15	pF

(1) Buffer strength configuration: LB0 = 1.

Table 6-86. LS- / FS-USB Timing Requirements—Bidirectional Standard 4-Pin Mode(1) (2)

NO.	PARAMETER		OPP100		OPP50		UNIT
			MIN	MAX	MIN	MAX	
FSU10	$t_{d(d,se0)}$	Time duration, mmx_txdat and mmx_txse0 low together during transition		14		14	ns
FSU11	$t_{d(d,se0)}$	Time duration, mmx_txdat and mmx_txse0 high together during transition		8		8	ns
FSU12	$t_{d(rcvU0)}$	Time duration, mmx_rrxcv undefine during a single end 0 (mmx_txdat and mmx_txse0 low together)		14		14	ns
FSU13	$t_{d(rcvU1)}$	Time duration, mmx_rxrcv undefine during a single end 1 (mmx_txdat and mmx_txse0 high together)		8		8	ns

(1) In mmx, x is equal to 0, 1, or 2.

(2) See Section 4.3.4, *Processor Clocks*.

Table 6-87. LS- / FS-USB Switching Characteristics—Bidirectional Standard 4-Pin Mode(1) (2)

NO.	PARAMETER		OPP100		OPP50		UNIT
			MIN	MAX	MIN	MAX	
FSU14	$t_{d(txenL-dV)}$	Delay time, mmx_txen_n low to mmx_txdat valid	81.8	84.8	81.8	84.8	ns
FSU15	$t_{d(txenL-se0V)}$	Delay time, mmx_txen_n low to mmx_txse0 valid	81.8	84.8	81.8	84.8	ns
FSU16	$t_{s(d-se0)}$	Skew between mmx_txdat and mmx_txse0 transition		1.5		1.5	ns
FSU17	$t_{d(dV-txenH)}$	Delay time, mmx_txdat invalid before mmx_txen_n high	81.8		81.8		ns

Copyright © 2010–2011, Texas Instruments Incorporated

Table 6-87. LS- / FS-USB Switching Characteristics—Bidirectional Standard 4-Pin Mode[(1) (2)] (continued)

NO.	PARAMETER		OPP100		OPP50		UNIT
			MIN	MAX	MIN	MAX	
FSU18	$t_{d(se0V-txenH)}$	Delay time, mmx_txse0 invalid before mmx_txen_n high	81.8		81.8		ns

(1) In mmx, x is equal to 0, 1, or 2.

(2) See Section 4.3.4, *Processor Clocks*.

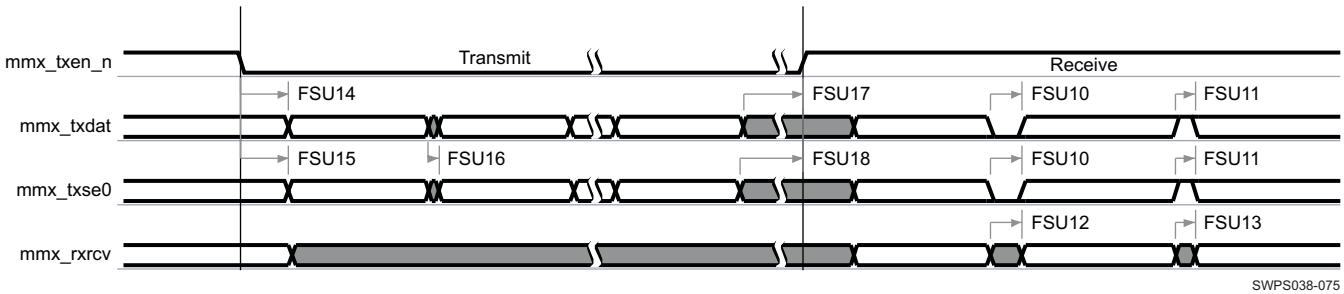

(1) In mmx, x is equal to 0, 1, or 2.

Figure 6-49. LS- / FS-USB—Bidirectional Standard 4-Pin Mode

6.6.3.3 FS-USB—Bidirectional Standard 3-pin Mode

Table 6-89 and Table 6-90 assume testing over the recommended operating conditions and electrical characteristic conditions below (see Figure 6-50).

Table 6-88. LS- / FS-USB Timing Conditions—Bidirectional Standard 3-Pin Mode

TIMING CONDITION PARAMETER		VALUE	UNIT
Input Conditions			
t_R	Input signal rise time	2	ns
t_F	Input signal fall time	2	ns
Output Condition			
C_{LOAD}	Output load capacitance[(1)]	15	pF

(1) Buffer strength configuration: LB0 = 1.

Table 6-89. LS- / FS-USB Timing Requirements—Bidirectional Standard 3-Pin Mode[(1) (2)]

NO.	PARAMETER		OPP100		OPP50		UNIT
			MIN	MAX	MIN	MAX	
FSU19	$t_{d(d,se0)}$	Time duration, mmx_txdat and mmx_txse0 low together during transition		14		14	ns
FSU20	$t_{d(d,se0)}$	Time duration, mmx_tsdat and mmx_txse0 high together during transition		8		8	ns

(1) In mmx, x is equal to 0, 1, or 2.

(2) See Section 4.3.4, *Processor Clocks*.

Copyright © 2010–2011, Texas Instruments Incorporated

Table 6-90. LS- / FS-USB Switching Characteristics—Bidirectional Standard 3-Pin Mode[(1) (2)]

NO.	PARAMETER		OPP100		OPP50		UNIT
			MIN	MAX	MIN	MAX	
FSU21	$t_{d(txenL-dV)}$	Delay time, mmx_txen_n low to mmx_txdat valid	81.8	84.8	81.8	84.8	ns
FSU22	$t_{d(txenL-se0V)}$	Delay time, mmx_txen_n low to mmx_txse0 valid	81.8	84.8	81.8	84.8	ns
FSU23	$t_{s(d-se0)}$	Skew between mmx_txdat and mmx_txse0 transition		1.5		1.5	ns
FSU24	$t_{d(dI-txenH)}$	Delay time, mmx_txdat invalid to mmx_txen_n high	81.8		81.8		ns
FSU25	$t_{d(se0I-txenH)}$	Delay time, mmx_txse0 invalid to mmx_txen_n high	81.8		81.8		ns

(1) In mmx, x is equal to 0, 1, or 2.

(2) See Section 4.3.4, *Processor Clocks*.

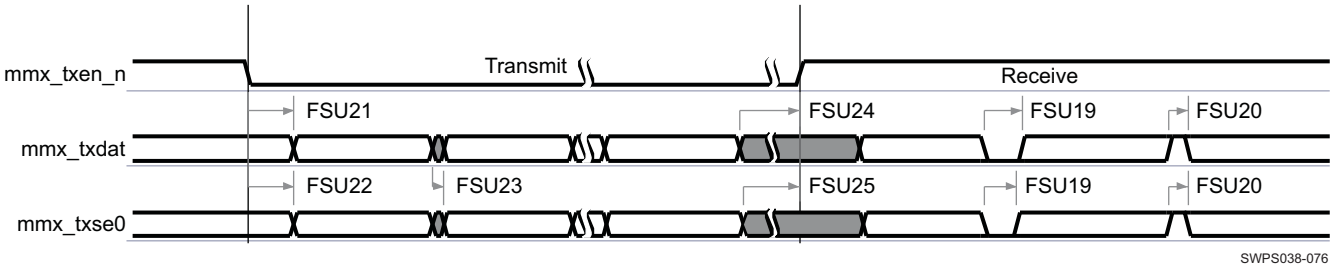

Figure 6-50. LS- / FS-USB—Bidirectional Standard 3-Pin Mode[(1)]

(1) In mmx, x is equal to 0, 1, or 2.

6.6.4 Multiport High-Speed Universal Serial Bus (HS-USB)

NOTE

For more information, see High-Speed USB Host Subsystem and High-Speed USB OTG Controller / High-Speed USB OTG Controller and High-Speed USB Host Subsystem and High-Speed USB OTG Controller / High-Speed USB Host Subsystem sections of the *AM/DM37x Multimedia Device Technical Reference Manual* (literature number SPRUGN4).

In addition to the full-speed (FS) USB controller, a high-speed (HS) USB OTG controller is incorporated in the device. It allows high-speed transactions (up to 480 Mbit/s) on the USB ports 0, 1, 2, and 3 described below:

- Port 0:
  - 12-bit slave mode (SDR)
- Ports 1 and 2:
  - 12-bit master mode (SDR)
- Port 3:

6.6.4.1 HSUSB0—Port 0—12-bit Slave Mode

Table 6-92 and Table 6-93 assume testing over the recommended operating conditions and electrical characteristic conditions below (see Figure 6-51).

Table 6-91. HSUSB0 Timing Conditions—12-bit Slave Mode

TIMING CONDITION PARAMETER		VALUE	UNIT
Input Conditions			
t_R	Input signal rise time	2	ns
t_F	Input signal fall time	2	ns
Output Condition			
C_{LOAD}	Output load capacitance(1)	3.5	pF

(1) Buffer strength configuration: LB0 = 0.

Table 6-92. HSUSB0 Timing Requirements—12-bit Slave Mode(3) (4)

NO.	PARAMETER		OPP100		UNIT
			MIN	MAX	
HSU0	$f_{p(CLK)}$	hsusb0_clk clock frequency(1)		60.03	MHz
	$t_{J(CLK)}$	Cycle jitter(2), hsusb0_clk		500	ps
HSU3	$t_{s(DIRV-CLKH)}$	Setup time, hsusb0_dir valid before hsusb0_clk rising edge	6.68		ns
	$t_{s(NXTV-CLKH)}$	Setup time, hsusb0_nxt valid before hsusb0_clk rising edge	6.68		ns
HSU4	$t_{h(CLKH-DIRIV)}$	Hold time, hsusb0_dir valid after hsusb0_clk rising edge	0		ns
	$t_{h(CLKH-NXT/IV)}$	Hold time, hsusb0_nxt valid after hsusb0_clk rising edge	0		ns
HSU5	$t_{s(DATAV-CLKH)}$	Setup time, hsusb0_data[0:7] valid before hsusb0_clk rising edge	6.68		ns
HSU6	$t_{h(CLKH-DATIV)}$	Hold time, hsusb0_data[0:7] valid after hsusb0_clk rising edge	0		ns

(1) Related with the input maximum frequency supported by the USB module.

(2) Maximum cycle jitter supported by hsusb0_clk input clock

(3) The timing requirements are assured up to the cycle jitter error condition specified.

(4) See Section 4.3.4, *Processor Clocks*.

Copyright © 2010–2011, Texas Instruments Incorporated

Table 6-93. HSUSB0 Switching Characteristics—12-bit Slave Mode[(1)]

NO.	PARAMETER		OPP100		UNIT
			MIN	MAX	
HSU1	$t_{d(clkL-STPV)}$	Delay time, hsusb0_clk high to output usb0_stp valid		8.6	ns
	$t_{d(clkL-STPIV)}$	Delay time, hsusb0_clk high to output usb0_stp invalid	0		ns
HSU2	$t_{d(clkL-DV)}$	Delay time, hsusb0_clk high to output hsusb0_data[0:7] valid		8.6	ns
	$t_{d(clkL-DIV)}$	Delay time, hsusb0_clk high to output hsusb0_data[0:7] invalid	0		ns

(1) See Section 4.3.4, *Processor Clocks*.

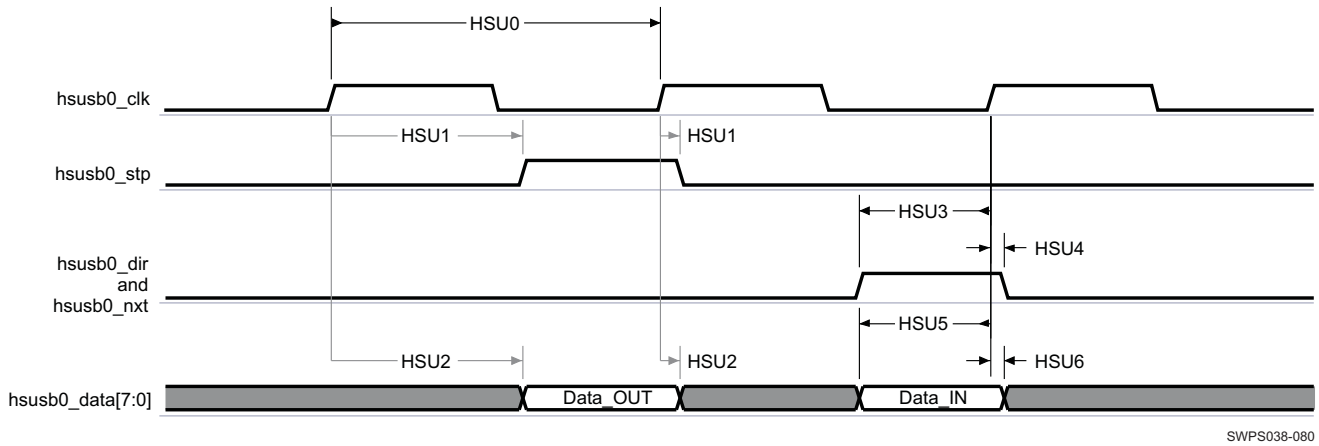

Figure 6-51. HSUSB0—12-bit Slave Mode

6.6.4.2 HSUSB1 and HSUSB2—Ports 1 and 2—12-bit Slave Mode

Table 6-95 and Table 6-96 assume testing over the recommended operating conditions and electrical characteristic conditions below (see Figure 6-52).

Table 6-94. HSUSB1 and HSUSB2 Timing Conditions—12-bit Master Mode

TIMING CONDITION PARAMETER		VALUE	UNIT
Input Conditions			
t_R	Input signal rise time	3	ns
t_F	Input signal fall time	2	ns
Output Condition			
C_{LOAD}	Output load capacitance[(1)]	5	pF

(1) Buffer strength configuration: LB0 = 0.

Table 6-95. HSUSB1 and HSUSB2 Timing Requirements—12-bit Master Mode[(1) (2)]

NO.	PARAMETER		OPP100		UNIT
			MIN	MAX	
HSU3	$t_{su(dirV-clkH)}$	Setup time, input direction control hsusbx_dir valid before output clock hsusbx_clk rising edge	9.3		ns
	$t_{su(nxtV-clkH)}$	Setup time, input next signal hsusbx_nxt valid before output clock hsusbx_clk rising edge	9.3		ns
HSU4	$t_{h(clkH-dirIV)}$	Hold time, input direction control hsusbx_dir valid after output clock hsusbx_clk rising edge	–0.52		ns
	$t_{h(clkH-nxtIV)}$	Hold time, input next signal hsusbx_nxt valid after output clock hsusbx_clk rising edge	–0.52		ns
HSU5	$t_{su(dV-clkH)}$	Setup time, input data hsusbx_data[7:0] valid before output clock hsusbx_clk rising edge	9.3		ns

Table 6-95. HSUSB1 and HSUSB2 Timing Requirements—12-bit Master Mode(1) (2) (continued)

NO.	PARAMETER		OPP100		UNIT
			MIN	MAX	
HSU6	$t_{h(clkH-dV)}$	Hold time, input data hsusbx_data[7:0] valid after output clock hsusbx_clk rising edge	–0.52		ns

(1) In hsusbx, x is equal to 1 or 2.

(2) See Section 4.3.4, *Processor Clocks*.

Table 6-96. HSUSB1 and HSUSB2 Switching Characteristics—12-bit Master Mode(1) (3)

NO.	PARAMETER		OPP100		UNIT
			MIN	MAX	
HSU0	$f_{p(clk)}$	Frequency, output clock hsusbx_clk		60	MHz
	$t_{J(clk)}$	Jitter standard deviation(2), output clock hsusbx_clk		400	ps
HSU1	$t_{d(clkH-stpV)}$	Delay time, output clock hsusbx_clk rising edge to output stop signal hsusbx_stp valid		12.81	ns
	$t_{d(clkH-stplV)}$	Delay time, output clock hsusbx_clk rising edge to output stop signal hsusbx_stp invalid	1.95		ns
HSU2	$t_{d(clkH-dV)}$	Delay time, output clock hsusbx_clk rising edge to output data hsusbx_data[7:0] valid		12.81	ns
	$t_{d(clkH-dIV)}$	Delay time, output clock hsusbx_clk rising edge to output data hsusbx_data[7:0] invalid	1.95		ns
	$t_{R(d)}$	Rise time, output data hsusbx_data[7:0]		0	ns
	$t_{F(d)}$	Fall time, output data hsusbx_data[7:0]		0	ns

(1) In hsusbx, x is equal to 1 or 2.

(2) The jitter probability density can be approximated by a Gaussian function.

(3) See Section 4.3.4, *Processor Clocks*.

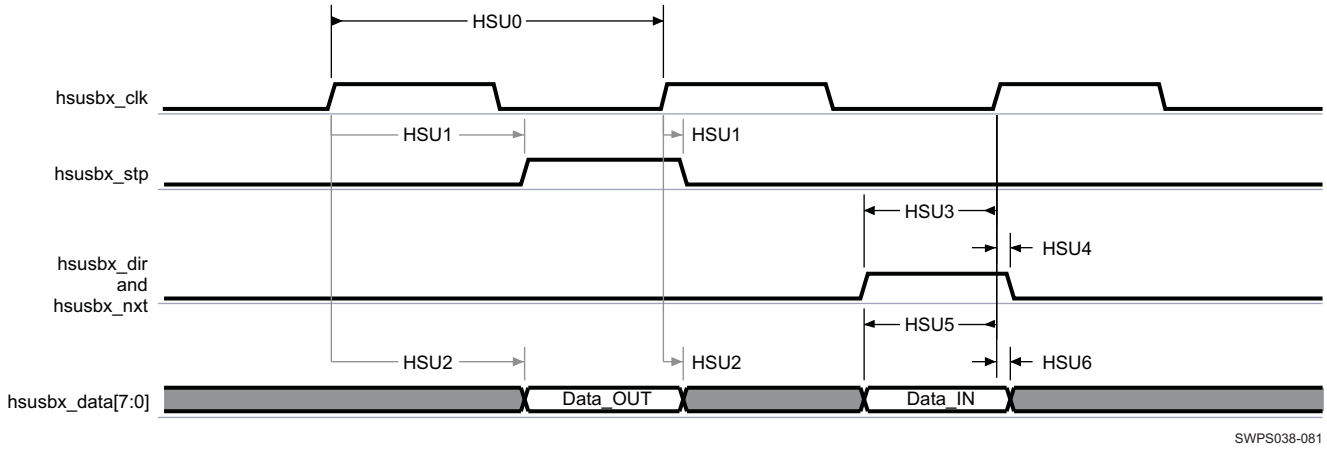

(1) In hsusbx, x is equal to 1 or 2.

Figure 6-52. HSUSB1 and HSUSB2—12-bit Master Mode

6.6.5 *Inter-Integrated Circuit Interface (I^2C)*

NOTE

For more information, see Multimaster High-Speed I2C Controller chapter of the *AM/DM37x Multimedia Device Technical Reference Manual* (literature number SPRUGN4).

The multi-master I^2C peripheral provides an interface between two or more devices via an I^2C serial bus.

Copyright © 2010–2011, Texas Instruments Incorporated

The I²C controller supports the multi-master mode which allows more than one device capable of controlling the bus to be connected to it. Each I²C device is recognized by a unique address and can operates as either transmitter or receiver, according to the function of the device. In addition to being a transmitter or receiver, a device connected to the I²C bus can also be considered as master or slave when performing data transfers. This data transfer is carried out via two serial bidirectional wires:

- An SDA data line
- An SCL clock line

In Figure 6-53 the data transfer is in master or slave configuration with 7-bit addressing format.

The I²C interface is compliant with Philips I²C specification version 2.1. It supports standard mode (up to 100K bits/s), fast mode (up to 400K bits/s) and high-speed mode (up to 3.4Mb/s).

6.6.5.1 I²C—Standard and Fast Modes

Table 6-97. I²C—Standard and Fast Modes

NO.	PARAMETER		STANDARD MODE		FAST MODE		UNIT
			MIN	MAX	MIN	MAX	
	f_{scl}	Frequency, clock i2cx_scl(4)		100		400	kHz
I1	$t_{w(sclH)}$	Pulse duration, clock i2cx_scl(4) high	4.0		0.6		µs
I2	$t_{w(sclL)}$	Pulse duration, clock i2cx_scl(4) low	4.7		1.3		µs
I3	$t_{su(sdaV-sclH)}$	Setup time, data i2cx_sda(4) valid before clock i2cx_scl(4) active level	250		100(1)		ns
I4	$t_{h(sclH-sdaV)}$	Hold time, data i2cx_sda(4) valid after clock i2cx_scl(4) active level	0(2)	3.45(3)	0(2)	0.9(3)	µs
I5	$t_{su(sdaL-sclH)}$	Setup time, clock i2cx_scl(4) high after data i2cx_sda(4) low (for a START(5) condition or a repeated START condition)	4.7		0.6		µs
I6	$t_{h(sclH-sdaH)}$	Hold time, data i2cx_sda low level after clock i2cx_scl(4) high level (STOP condition)	4.0		0.6		µs
I7	$t_{h(sclH-RSTART)}$	Hold time, data i2cx_sda(4) low level after clock i2cx_scl(4) high level (for a repeated START condition)	4.0		0.6		µs
I8	$t_{w(sdaH)}$	Pulse duration, data i2cx_sda(4) high between STOP and START conditions	4.7(4)		1.3		µs
	$t_{R(scl)}$	Rise time, clock i2cx_scl(4)		1000	20 + $0.1C_B$	300	ns
	$t_{F(scl)}$	Fall time, clock i2cx_scl(4)		300	20 + $0.1C_B$	300	ns
	$t_{R(sda)}$	Rise time, data i2cx_sda(4)		1000	20 + $0.1C_B$	300	ns
	$t_{F(sda)}$	Fall time, data i2cx_sda(4)		300	20 + $0.1C_B$	300	ns
	C_B	Capacitive load for each bus line		400		400	pF

(1) A fast-mode I²C-bus device can be used in a standard-mode I²C-bus system, but the requirement $t_{su(SDAV-SCLH)} \geq 250$ ns must then be met. This is automatically the case if the device does not stretch the low period of the i2cx_scl(4). If such a device does stretch the low period of the i2cx_scl(4), it must output the next data bit to the i2cx_sda(4) line $t_{r(SDA)}$ max + $t_{su(SDAV-SCLH)}$ = 1000 + 250 = 1250 ns (according to the standard-mode I²C-bus specification) before the i2cx_scl(4) line is released.

(2) The device provides (via the I²C bus) a minimum hold time (= I2C_FCLK period x (PSC+1) x 4) for the i2cx_sda(4) signal (see the fall and rise times of i2cx_scl(4)) to bridge the undefined region of the falling edge of i2cx_scl(4).

(3) The maximum $t_{h(SCLH-SDA)}$ has only to be met if the device does not stretch the low period of the i2cx_scl(4) signal.

(4) In i2cx, x is equal to 1, 2, 3, or 4. Note that I2C4 is master transmitter only.

(5) After this time, the first clock is generated.

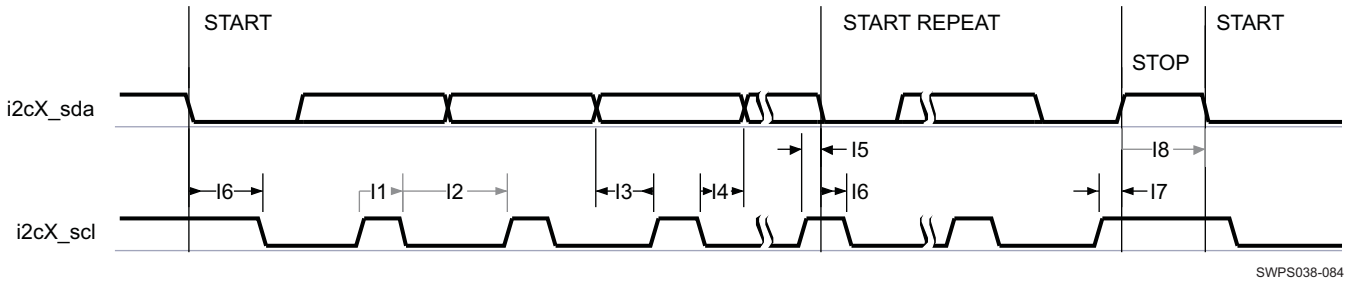

(1) In i2cX, X is equal to 1, 2, 3, or 4.

Figure 6-53. I²C—Standard and Fast Modes

6.6.5.2 I²C—High-Speed Mode

Table 6-98. I²C—High-Speed Mode

NO.	PARAMETER		MIN	MAX	UNIT
	f_{scl}	Frequency, clock i2cx_scl(3)		3.4(5)	MHz
I1	$t_{w(sclH)}$	Pulse duration, clock i2cx_scl(3) high	60(1)		ns
I2	$t_{w(sclL)}$	Pulse duration, clock i2cx_scl(3) low	160(1)		ns
I3	$t_{su(sdaV-sclH)}$	Setup time, data i2cx_sda(3) valid before clock i2cx_scl(3) active level	10		ns
I4	$t_{h(sclH-sdaV)}$	Hold time, data i2cx_sda(3) valid after clock i2cx_scl(3) active level	0(4)	70	ns
I5	$t_{su(sdaL-sclH)}$	Setup time, clock i2cx_scl(3) high after data i2cx_sda(3) low (for a START(2) condition or a repeated START condition)	160		ns
I6	$t_{h(sclH-sdaH)}$	Hold time, data i2cx_sda(3) low level after clock i2cx_scl(3) high level (STOP condition)	160		ns
I7	$t_{h(sclH-RSTART)}$	Hold time, data i2cx_sda(3) low level after clock i2cx_scl(3) high level (for a repeated START condition)	160		ns
	$t_{R(scl)}$	Rise time, clock i2cx_scl(3)	10	40	ns
	$t_{R(scl)}$	Rise time, clock i2cx_scl(3) after a repeated START condition and after a bit acknowledge	10	80	ns
	$t_{F(scl)}$	Fall time, clock i2cx_scl(3)	10	40	ns
	$t_{R(sda)}$	Rise time, data i2cx_sda(3)	10	80	ns
	$t_{F(sda)}$	Fall time, data i2cx_sda(3)	10	80	ns
	C_B	Capacitive load for each bus line		100	pF

(1) HS-mode master devices generate a serial clock signal with a high to low ratio of 1 to 2. $t_{w(sclL)} > 2 * t_{w(sclH)}$.

(2) After this time, the first clock is generated.

(3) In i2cx, x is equal to 1, 2, 3, or 4. Note that I2C4 is master transmitter only.

(4) The device provides (via the I²C bus) a minimum hold time (= I2C_FCLK period x 4) for the i2cx_sda(3) signal (see the fall and rise times of i2cx_scl(3)) to bridge the undefined region of the falling edge of i2cx_scl(3).

(5) The I2C4 clock frequency in high-speed mode is equal to the sys_xtalin input clock frequency divided by 15.

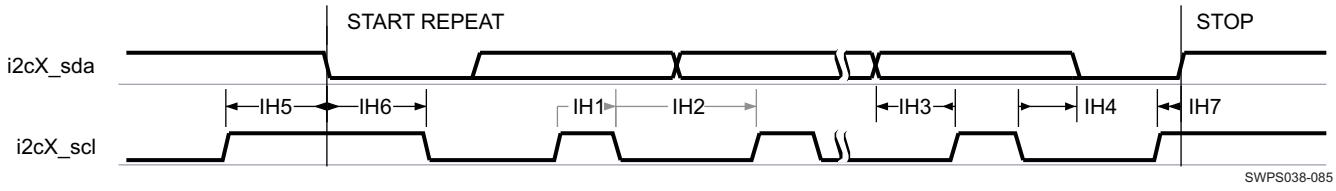

(1) In i2cX, X is equal to 1, 2, 3, or 4.

Figure 6-54. I²C—High-Speed Mode

Copyright © 2010–2011, Texas Instruments Incorporated

Table 6-99. I²C Correspondence Standard vs Data Manual Timing References

TI		STANDARD-I²C	
		Standard/Fast Modes	High-Speed Mode
	f_{scl}	F_{SCL}	F_{SCLH}
I1	$t_{w(sclH)}$	T_{HIGH}	T_{HIGH}
I2	$t_{w(sclL)}$	T_{LOW}	T_{LOW}
I3	$t_{su(sdaV-sclH)}$	$T_{SU;DAT}$	$T_{SU;DAT}$
I4	$t_{h(sclH-sdaV)}$	$T_{SU;DAT}$	$T_{SU;DAT}$
I5	$t_{su(sdaL-sclH)}$	$T_{SU;STA}$	$T_{SU;STA}$
I6	$t_{h(sclH-sdaH)}$	$T_{HD;STA}$	$T_{HD;STA}$
I7	$t_{h(sclH-RSTART)}$	$T_{SU;STO}$	$T_{SU;STO}$
I8	$t_{w(sdaH)}$	T_{BUF}	

6.6.6 HDQ / 1-Wire Interface (HDQ/1-Wire)

NOTE

For more information, see HDQ/1-Wire / HDQ/1-Wire chapter of the *AM/DM37x Multimedia Device Technical Reference Manual* (literature number SPRUGN4).

The module is intended to work with both HDQ and 1-Wire protocols. The protocols use a single wire to communicate between the master and the slave. The protocols employ an asynchronous return to one mechanism where, after any command, the line is pulled high.

6.6.6.1 HDQ/1-Wire—HDQ Mode

Table 6-100 and Table 6-102 assume testing over the recommended operating conditions and electrical characteristic conditions below (see Figure 6-55 through Figure 6-59).

Table 6-100. HDQ Interface Read Timing

PARAMETER	DESCRIPTION	MIN	TYP	MAX	UNIT
t_{CYCH}	Read bit window timing	190		250	µs
t_{HW1}	Read one data valid after HDQ low	32(2)		66(2)	µs
t_{HW0}	Read zero data hold after HDQ low	70(2)		145(2)	µs
t_{RSPS}	Response time from HDQ slave device(1)	190		320	µs

(1) Defined by software

(2) If the HDQ slave device drives a logic-low state after t_{HW0} max, it can be interpreted as a break pulse. For more information see Table 6-101 and the HDQ/1-Wire chapter of the *AM/DM37x Multimedia Device Technical Reference Manual* (literature number SPRUGN4).

Table 6-101. HDQ Sampling Cases(1)

CASES	FIRST SAMPLING (at 68 µs)	SECOND SAMPLING (at 180 µs)
1	L (logic-low state)	L (logic-low state)
2	L (logic-low state)	H (logic-high state)
3	H (logic-high state)	L (logic-low state)
4	H (logic-high state)	H (logic-high state)

(1) The different cases can be interpreted as follows:

- Case 1: If a logic-low state is present at the first sampling time and also at the second sampling time, the receive data can be interpreted as a break pulse.
- Case 2: If a logic-low state is present at the first sampling time and a logic-high state is present at the second sampling time, the receive data on the line is a zero (data).
- Case 3: Undefined.
- Case 4: If a logic-high state is present at the first sampling time and also at the second sampling time, the receive data on the line is a one (data).

Table 6-102. HDQ Write Switching Characteristics

PARAMETER	DESCRIPTION	MIN	TYP	MAX	UNIT
t_B	Break timing	190			µs
t_{BR}	Break recovery time	40			µs
t_{CYCD}	Write bit windows timing	190			µs
t_{DW1}	Write one data valid after HDQ low	0.5		50	µs
t_{DW0}	Write zero data hold after HDQ low	86		145	µs

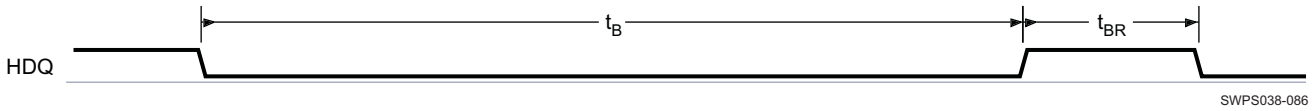

Figure 6-55. HDQ Break and Break Recovery Timing— HDQ Interface Writing to Slave

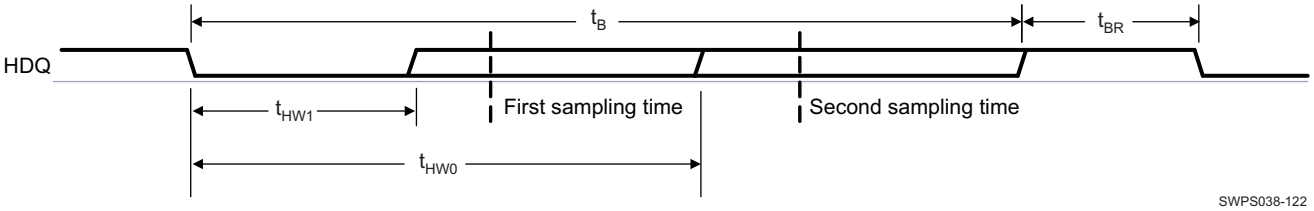

Figure 6-56. HDQ Break Detection— HDQ Interface Reading Slave

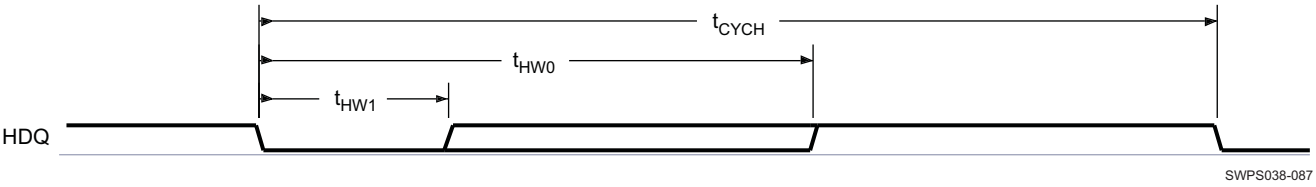

Figure 6-57. HDQ Interface Bit Read Timing (Data)

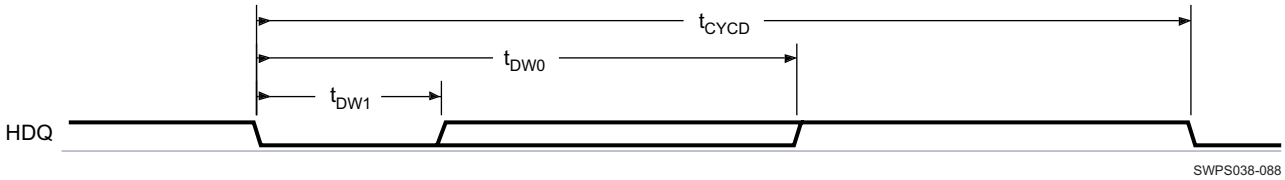

Figure 6-58. HDQ Interface Bit Write Timing (Command/Address or Data)

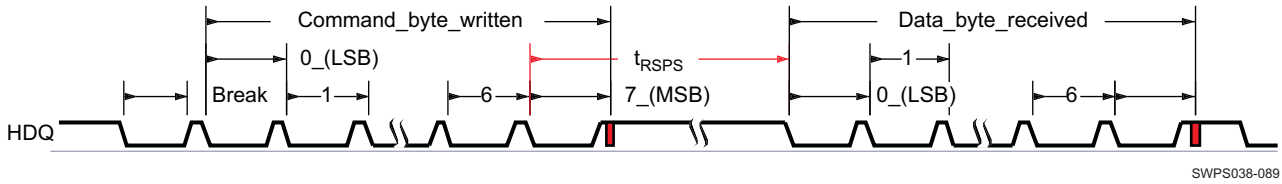

Figure 6-59. HDQ—Communication

6.6.6.2 HDQ/1-Wire—1-Wire Mode

Table 6-103 and Table 6-104 assume testing over the recommended operating conditions and electrical characteristic conditions below (see Figure 6-60 through Figure 6-63).

Copyright © 2010–2011, Texas Instruments Incorporated

Table 6-103. HDQ/1-Wire Timing Requirements—1-Wire Mode

PARAMETER	DESCRIPTION	MIN	TYP	MAX	UNIT
t_{PDH}	Presence pulse delay high	15		60	µs
t_{PDL}	Presence pulse delay low	60		240	µs
t_{RDV}	Read data valid time	t_{LOWR}		15	µs
t_{REL}	Read data release time	0		45	µs

Table 6-104. HDQ/1-Wire Switching Characteristics—1-Wire Mode

PARAMETER	DESCRIPTION	MIN	TYP	MAX	UNIT
t_{RSTL}	Reset time low	480		960	µs
t_{RSTH}	Reset time high	480			µs
t_{SLOT}	Bit cycle time	60		120	µs
t_{LOW1}	Write bit-one time	1		15	µs
t_{LOW0}	Write bit-zero time(2)	60		120	µs
t_{REC}	Recovery time	1			µs
t_{LOWR}	Read bit strobe time(1)	1		15	µs

(1) t_{LOWR} (low pulse sent by the master) must be short as possible to maximize the master sampling window.

(2) t_{LOW0} must be less than t_{SLOT}.

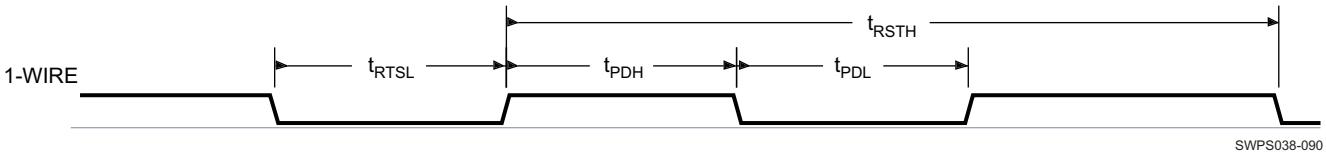

Figure 6-60. 1-Wire Reset Timing

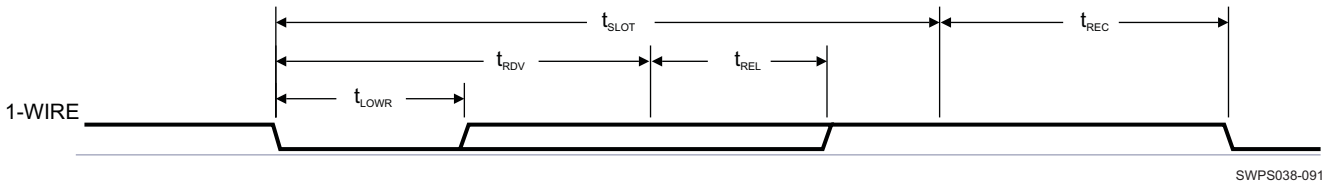

Figure 6-61. 1-Wire Read Bit Timing (Data)

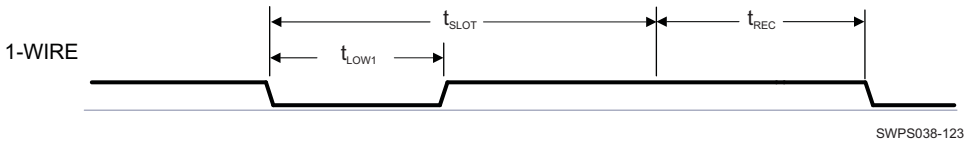

Figure 6-62. 1-Wire Write Bit-One Timing (Command / Address or Data)

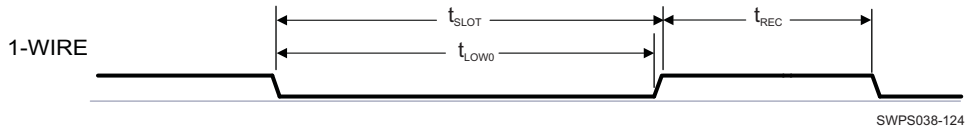

Figure 6-63. 1-Wire Write Bit-Zero Timing (Command/Address or Data)

6.6.7 Universal Asynchronous Receiver Transmitter (UART)

NOTE

For more information, see UART/IrDA/CIR chapter of the *AM/DM37x Multimedia Device Technical Reference Manual* (literature number SPRUGN4).

6.6.7.1 UART

Table 6-105. UART Switching Characteristics[2]

SIGNAL NAME	MUX MODE	DESCRIPTION		MIN	MAX	UNIT
Universal Asynchronous Receiver/Transmitter (UART1)						
UART1 (uart1_tx): AA8	0	t_R, Rise time		1.5	5.5	ns
		t_F, Fall time				
		C_L, Output load		2	22	pF
UART1 (uart1_rts): AA9	0	t_R, Rise time		1.5	5.5	ns
		t_F, Fall time				
		C_L, Output load		2	22	pF
UART1 (uart1_tx): E26	2	t_R, Rise time		0.6	2.4	ns
		t_F, Fall time				
		C_L, Output load		2	22	pF
UART1 (uart1_rts): AH22	2	t_R, Rise time	SC0, SC1 = 00[1]	1	15	ns
		t_F, Fall time				
		C_L, Output load		4	60	pF
		t_R, Rise time	SC0, SC1 = 00[1]	0.4	5	ns
		t_F, Fall time				
		C_L, Output load		2	21	pF
		t_R, Rise time	SC0, SC1 = 00[1]	0.6	7	ns
		t_F, Fall time				
		C_L, Output load		7	33	pF
Universal Asynchronous Receiver/Transmitter (UART2)						
UART2 (uart2_tx): AA25	0	t_R, Rise time		1.5	5.5	ns
		t_F, Fall time				
		C_L, Output load		2	22	pF
UART2 (uart2_rts): AB25	0	t_R, Rise time		1.5	5.5	ns
		t_F, Fall time				
		C_L, Output load		2	22	pF
UART2 (uart2_tx): AF5	1	t_R, Rise time		1.5	5.5	ns
		t_F, Fall time				
		C_L, Output load		2	22	pF
UART2 (uart2_rts): AE6	1	t_R, Rise time		1.5	5.5	ns
		t_F, Fall time				
		C_L, Output load		2	22	pF
UART2 (uart2_tx): T27	5	t_R, Rise time		1.5	5.5	ns
		t_F, Fall time				
		C_L, Output load		2	22	pF
UART2 (uart2_rts): U27	5	t_R, Rise time		1.5	5.5	ns
		t_F, Fall time				
		C_L, Output load		2	22	pF
Universal Asynchronous Receiver/Transmitter (UART3)						

Copyright © 2010–2011, Texas Instruments Incorporated

Table 6-105. UART Switching Characteristics[2] (continued)

SIGNAL NAME	MUX MODE	DESCRIPTION		MIN	MAX	UNIT
UART3 (uart3_cts_rctx): H18	0	t_R, Rise time	SC0, SC1 = 00[1]	1	15	ns
		t_F, Fall time				
		C_L, Output load		4	60	pF
		t_R, Rise time	SC0, SC1 = 00[1]	0.4	5	ns
		t_F, Fall time				
		C_L, Output load		2	21	pF
		t_R, Rise time	SC0, SC1 = 00[1]	0.6	7	ns
		t_F, Fall time				
		C_L, Output load		7	33	pF
UART3 (uart3_rts_sd): H19	0	t_R, Rise time	SC0, SC1 = 00[1]	1	15	ns
		t_F, Fall time				
		C_L, Output load		4	60	pF
		t_R, Rise time	SC0, SC1 = 00[1]	0.4	5	ns
		t_F, Fall time				
		C_L, Output load		2	21	pF
		t_R, Rise time	SC0, SC1 = 00[1]	0.6	7	ns
		t_F, Fall time				
		C_L, Output load		7	33	pF
UART3 (uart3_tx_irtx): H21	0	t_R, Rise time	SC0, SC1 = 00[1]	1	15	ns
		t_F, Fall time				
		C_L, Output load		4	60	pF
		t_R, Rise time	SC0, SC1 = 00[1]	0.4	5	ns
		t_F, Fall time				
		C_L, Output load		2	21	pF
		t_R, Rise time	SC0, SC1 = 00[1]	0.6	7	ns
		t_F, Fall time				
		C_L, Output load		7	33	pF
UART3 (uart3_cts_rctx): U26	2	t_R, Rise time		1.5	5.5	ns
		t_F, Fall time				
		C_L, Output load		2	22	pF
UART3 (uart3_rts_sd): U27	2	t_R, Rise time		1.5	5.5	ns
		t_F, Fall time				
		C_L, Output load		2	22	pF
UART3 (uart3_tx_irtx): AH24	2	t_R, Rise time	SC0, SC1 = 00[1]	1	15	ns
		t_F, Fall time				
		C_L, Output load		4	60	pF
		t_R, Rise time	SC0, SC1 = 00[1]	0.4	5	ns
		t_F, Fall time				
		C_L, Output load		2	21	pF
		t_R, Rise time	SC0, SC1 = 00[1]	0.6	7	ns
		t_F, Fall time				
		C_L, Output load		7	33	pF
UART3 (uart3_tx_irtx): G26	2	t_R, Rise time		0.6	2.4	ns
		t_F, Fall time				
		C_L, Output load		2	22	pF

Table 6-105. UART Switching Characteristics[(2)] (continued)

SIGNAL NAME	MUX MODE	DESCRIPTION	MIN	MAX	UNIT
UART3 (uart3_tx_irtx): T27	2	t_R, Rise time	1.5	5.5	ns
		t_F, Fall time			
		C_L, Output load	2	22	pF
Universal Asynchronous Receiver/Transmitter (UART4)					
UART4 (uart4_tx): K8	2	t_R, Rise time	0.6	2.4	ns
		t_F, Fall time			
		C_L, Output load	2	22	pF

(1) The mode is configured by bits SC0 and SC1 of the IO cell. For more details, see the *AM/DM37x Multimedia Device Technical Reference Manual* (literature number SPRUGN4).

(2) Caution: Up to a rise time or a fall time of 1.2 ns, this can create EMI parasitics.

6.6.7.2 UART3 IrDA

The IrDA module can operate in three different modes:

- Slow infrared (SIR) (≤ 115.2 Kbits/s)
- Medium infrared (MIR) (0.576 Mbits/s and 1.152 Mbits/s)
- Fast infrared (FIR) (4 Mbits/s)

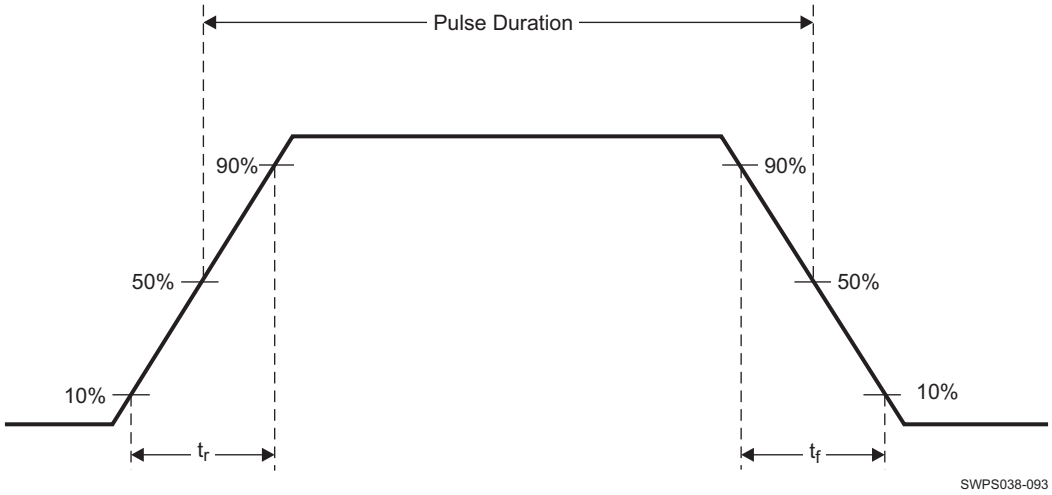

Figure 6-64. UART IrDA Pulse Parameters

6.6.7.2.1 UART3 IrDA—Receive Mode

Table 6-106. UART3 IrDA Signaling Rate and Pulse Duration—Receive Mode

SIGNALING RATE	ELECTRICAL PULSE DURATION			UNIT
	MIN	TYP	MAX	
SIR				
2.4 Kbit/s	52.17	78.13	208.33	µs
9.6 Kbit/s	13.10	19.53	52.08	µs
19.2 Kbit/s	6.59	9.77	26.04	µs
38.4 Kbit/s	3.34	4.88	13.02	µs
57.6 Kbit/s	2.25	3.26	8.68	µs
115.2 Kbit/s	1.17	1.63	4.34	µs
MIR				
0.576 Mbit/s	300.55	416.67	867.86	ns

Copyright © 2010–2011, Texas Instruments Incorporated

Table 6-106. UART3 IrDA Signaling Rate and Pulse Duration—Receive Mode (continued)

SIGNALING RATE	ELECTRICAL PULSE DURATION			UNIT
	MIN	TYP	MAX	
1.152 Mbit/s	192.04	208.33	433.83	ns
FIR				
4.0 Mbit/s (Single pulse)	62.70	125.00	170.63	ns
4.0 Mbit/s (Double pulse)	208.53	250.00	291.47	ns

Table 6-107. UART3 IrDA Rise and Fall Times—Receive Mode

PARAMETER		MIN	TYP	MAX	UNIT
t_R	Rise time, input data uart3_rx_irrx			200	ns
t_F	Fall time, input data uart3_rx_irrx			200	ns

6.6.7.2.2 UART3 IrDA—Transmit Mode

Table 6-108. UART3 IrDA Signaling Rate and Pulse Duration—Transmit Mode

SIGNALING RATE	ELECTRICAL PULSE DURATION			UNIT
	MIN	TYP	MAX	
SIR				
2.4 Kbit/s	78.1	78.1	78.1	µs
9.6 Kbit/s	19.5	19.5	19.5	µs
19.2 Kbit/s	9.75	9.75	9.75	µs
38.4 Kbit/s	4.87	4.87	4.87	µs
57.6 Kbit/s	3.25	3.25	3.25	µs
115.2 Kbit/s	1.62	1.62	1.62	µs
MIR				
0.576 Mbit/s	414	416	419	ns
1.152 Mbit/s	206	208	211	ns
FIR				
4.0 Mbit/s (Single pulse)	123	125	128	ns
4.0 Mbit/s (Double pulse)	248	250	253	ns

6.6.8 Removable Media Interfaces

6.6.8.1 Multimedia Memory Card and Secure Digital IO Card (MMC)

NOTE

For more information, see MMC/SD/SDIO Card Interface chapter of the *AM/DM37x Multimedia Device Technical Reference Manual* (literature number SPRUGN4).

The MMC host controller provides an interface to high-speed and standard MMC, SD memory cards, or SDIO cards. The application interface is responsible for managing transaction semantics. The MMC/SDIO host controller deals with MMC/SDIO protocol at transmission level, packing data, adding CRC, start/end bit, and checking for syntactical correctness.

There are three MMC interfaces on the device:

- MMC1:
  - 1.8-V / 3-V support
  - 4-bit in Standard MMC, High-Speed MMC, Standard SD, and High-Speed SD modes

- MMC2:
  - 1.8-V support
  - 8-bit without external transceiver
  - 4-bit with external transceiver allowing supporting 3-V peripherals. Transceiver direction control signals are multiplexed with the upper four data bits.
- MMC3:
  - 1.8-V support
  - 8-bit without external transceiver

6.6.8.1.1 MMC1 Interface—SD Identification Modes

Table 6-110 and Table 6-111 assume testing over the recommended operating conditions and electrical characteristic conditions below.

Table 6-109. MMC1 Interface Timing Conditions—SD Identification Modes

TIMING CONDITION PARAMETER		VALUE	UNIT
Input Conditions			
t_R	Input signal rise time	10	ns
t_F	Input signal fall time	10	ns
Output Condition			
C_{LOAD}	Output load capacitance(1)	40	pF

(1) Buffer strength configuration: LB0 = 0.

Table 6-110. MMC1 Interface Timing Requirements—SD Identification Modes(1) (2)

NO.	PARAMETER		OPP100		OPP50		UNIT
			MIN	MAX	MIN	MAX	
MMC1 Interface (1.8-V IO)							
SD3	$t_{su(CMDV-CLKIH)}$	Setup time, mmc1_cmd valid before mmc1_clk rising clock edge	1198.4		1198.4		ns
SD4	$t_{h(CLKIH-CMDIV)}$	Hold time, mmc1_cmd valid after mmc1_clk rising clock edge	1249.2		1249.2		ns
MMC1 Interface (3.0-V IO)							
SD3	$t_{su(CMDV-CLKIH)}$	Setup time, mmc1_cmd valid before mmc1_clk rising clock edge	1198.4		1198.4		ns
SD4	$t_{h(CLKIH-CMDIV)}$	Hold time, mmc1_cmd valid after mmc1_clk rising clock edge	1249.2		1249.2		ns

(1) Corresponding figures showing timing parameters are common with other interface modes. (See SD , HS SD modes).

(2) See Section 4.3.4, *Processor Clocks*.

Table 6-111. MMC1 Interface Switching Characteristics—SD Identification Modes(4) (7)

NO.	PARAMETER		OPP100		OPP50		UNIT
			MIN	MAX	MIN	MAX	
SD Identification Mode							
SD1	$t_{c(clk)}$	Frequency(1), output clock period		0.4		0.4	MHz
SD2	$t_{W(clkH)}$	Typical pulse duration, output clock high	X(5)*PO(2)		X(5)*PO(2)		ns
SD2	$t_{W(clkL)}$	Typical pulse duration, output clock low	Y(6)*PO(2)		Y(6)*PO(2)		ns
	$t_{dc(clk)}$	Duty cycle error, output clock		125		125	ns
	$t_{J(clk)}$	Jitter standard deviation(3), output clock		200		200	ps
MMC1 Interface (1.8-V IO)							
	$t_{R(clk)}$	Rise time, output clock		10		10	ns
	$t_{F(clk)}$	Fall time, output clock		10		10	ns

Copyright © 2010–2011, Texas Instruments Incorporated

Table 6-111. MMC1 Interface Switching Characteristics—SD Identification Modes[(4) (7)] (continued)

NO.	PARAMETER		OPP100		OPP50		UNIT
			MIN	MAX	MIN	MAX	
	$t_{R(data)}$	Rise time, output data		10		10	ns
	$t_{F(data)}$	Fall time, output data		10		10	ns
SD5	$t_{d(CLKOH-CMD)}$	Delay time, mmc1_clk rising clock edge to mmc1_cmd transition	6.3	2492.7	6.3	2492.7	ns
MMC1 Interface (3.0-V IO)							
	$t_{R(clk)}$	Rise time, output clock		10		10	ns
	$t_{F(clk)}$	Fall time, output clock		10		10	ns
	$t_{R(data)}$	Rise time, output data		10		10	ns
	$t_{F(data)}$	Fall time, output data		10		10	ns
SD5	$t_{d(CLKOH-CMD)}$	Delay time, mmc1_clk rising clock edge to mmc1_cmd transition	6.3	2492.7	6.3	2492.7	ns

(1) Related with the output clock maximum and minimum frequencies programmable in mmc module.

(2) PO = output clock period in ns

(3) The jitter probability density can be approximated by a Gaussian function.

(4) Corresponding figures showing timing parameters are common with other interface modes. (See SD, HS SD modes).

(5) The X parameter is defined as follows:

CLKD	X
1 or Even	0.5
Odd	(trunk[CLKD/2]+1)/CLKD

All required details about clock division factor CLKD can be found in the *AM/DM37x Multimedia Device Technical Reference Manual* (literature number SPRUGN4).

(6) The Y parameter is defined as follows:

CLKD	Y
1 or Even	0.5
Odd	(trunk[CLKD/2])/CLKD

All required details about clock division factor CLKD can be found in the *AM/DM37x Multimedia Device Technical Reference Manual* (literature number SPRUGN4).

(7) See Section 4.3.4, *Processor Clocks*.

6.6.8.1.2 MMC1 Interface—High-Speed SD Mode

Table 6-113 and Table 6-114 assume testing over the recommended operating conditions and electrical characteristic conditions below (see Figure 6-65 and Figure 6-66).

Table 6-112. MMC1 Interface Timing Conditions—High-Speed SD Mode

TIMING CONDITION PARAMETER		VALUE	UNIT
Input Conditions			
t_R	Input signal rise time	3	ns
t_F	Input signal fall time	3	ns
Output Condition			
C_{LOAD}	Output load capacitance[(1)]	40	pF

(1) Buffer strength configuration: SPEEDCTRL = 1.

Table 6-113. MMC1 Interface Timing Requirements—High-Speed SD Mode[2]

NO.	PARAMETER		OPP100		OPP50		UNIT
			MIN	MAX	MIN	MAX	
MMC1 Interface (1.8-V IO)							
HSSD3	$t_{su(CMDV-CLKIH)}$	Setup time, mmc1_cmd valid before mmc1_clk rising clock edge	5.6		26		ns
HSSD4	$t_{h(CLKIH-CMDIV)}$	Hold time, mmc1_cmd valid after mmc1_clk rising clock edge	2.3		1.9		ns
HSSD7	$t_{su(DATxV-CLKIH)}$	Setup time, mmc1_dat[n:0][1] valid before mmc1_clk rising clock edge	5.6		26		ns
HSSD8	$t_{h(CLKIH-DATxIV)}$	Hold time, mmc1_dat[n:0][1] valid after mmc1_clk rising clock edge	2.3		1.9		ns
MMC1 Interface (3.0-V IO)							
HSSD3	$t_{su(CMDV-CLKIH)}$	Setup time, mmc1_cmd valid before mmc1_clk rising clock edge	5.6		26		ns
HSSD4	$t_{h(CLKIH-CMDIV)}$	Hold time, mmc1_cmd valid after mmc1_clk rising clock edge	2.3		1.9		ns
HSSD7	$t_{su(DATxV-CLKIH)}$	Setup time, mmc1_dat[n:0][1] valid before mmc1_clk rising clock edge	5.6		26		ns
HSSD8	$t_{h(CLKIH-DATxIV)}$	Hold time, mmc1_dat[n:0][1] valid after mmc1_clk rising clock edge	2.3		1.9		ns

(1) In mmc1_dat[n:0], n is equal to 3.

(2) See Section 4.3.4, *Processor Clocks*.

Copyright © 2010–2011, Texas Instruments Incorporated

Table 6-114. MMC1 Interface Switching Characteristics—High-Speed SD Mode[7]

NO.	PARAMETER		OPP100		OPP50		UNIT
			MIN	MAX	MIN	MAX	
High-Speed SD Mode							
HSSD1	$t_{c(clk)}$	Frequency[1], output clock period		48		24	MHz
HSSD2	$t_{W(clkH)}$	Typical pulse duration, output clock high	X[4]*PO[2]		X[4]*PO[2]		ns
HSSD2	$t_{W(clkL)}$	Typical pulse duration, output clock low	Y[5]*PO[2]		Y[5]*PO[2]		ns
	$t_{dc(clk)}$	Duty cycle error, output clock		1041.67		2083.33	ps
	$t_{J(clk)}$	Jitter standard deviation[3], output clock		200		200	ps
MMC1 Interface (1.8-V IO)							
	$t_{R(clk)}$	Rise time, output clock		3		3	ns
	$t_{F(clk)}$	Fall time, output clock		3		3	ns
	$t_{R(data)}$	Rise time, output data		3		3	ns
	$t_{F(data)}$	Fall time, output data		3		3	ns
HSSD5	$t_{d(CLKOH-CMD)}$	Delay time, mmc1_clk rising clock edge to mmc1_cmd transition	3.72	14.11	4.13	34.53	ns
HSSD6	$t_{d(CLKOH-DATx)}$	Delay time, mmc1_clk rising clock edge to mmc1_dat[n:0][6] transition	3.72	14.11	4.13	34.53	ns
MMC1 Interface (3.0-V IO)							
	$t_{R(clk)}$	Rise time, output clock		3		3	ns
	$t_{F(clk)}$	Fall time, output clock		3		3	ns
	$t_{R(data)}$	Rise time, output data		3		3	ns
	$t_{F(data)}$	Fall time, output data		3		3	ns
HSSD5	$t_{d(CLKOH-CMD)}$	Delay time, mmc1_clk rising clock edge to mmc1_cmd transition	3.72	14.11	4.13	34.53	ns
HSSD6	$t_{d(CLKOH-DATx)}$	Delay time, mmc1_clk rising clock edge to mmc1_dat[n:0][6] transition	3.72	14.11	4.13	34.53	ns

(1) Related with the output clock maximum and minimum frequencies programmable in MMC module.

(2) PO = output clock period in ns

(3) The jitter probability density can be approximated by a Gaussian function.

(4) The X parameter is defined as follows:

CLKD	X
1 or Even	0.5
Odd	(trunk[CLKD/2]+1)/CLKD

All required details about clock division factor CLKD can be found in the *AM/DM37x Multimedia Device Technical Reference Manual* (literature number SPRUGN4).

(5) The Y parameter is defined as follows:

CLKD	Y
1 or Even	0.5
Odd	(trunk[CLKD/2])/CLKD

All required details about clock division factor CLKD can be found in the *AM/DM37x Multimedia Device Technical Reference Manual* (literature number SPRUGN4).

(6) In mmc1_dat[n:0], n is equal to 3.

(7) See Section 4.3.4, *Processor Clocks*.

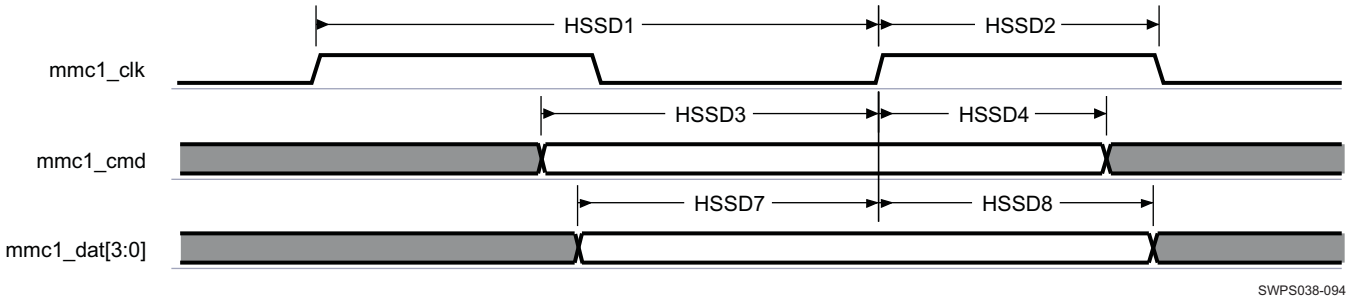

Figure 6-65. MMC1 Interface—High-Speed SD Mode—Data/Command Receive

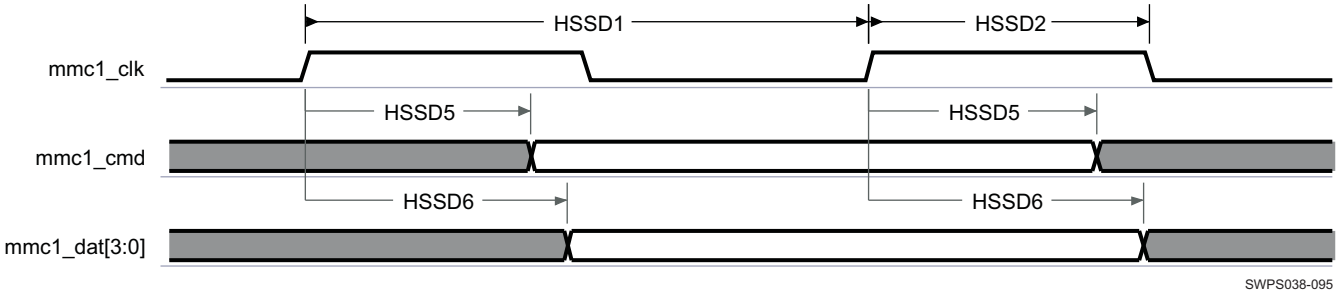

Figure 6-66. MMC1 Interface—High-Speed SD Mode—Data/Command Transmit

6.6.8.1.3 MMC1 Interface—Standard SD Mode

Table 6-116 and Table 6-117 assume testing over the recommended operating conditions and electrical characteristic conditions below (see Figure 6-67 and Figure 6-68).

Table 6-115. MMC1 Interface Timing Conditions—Standard SD Mode

TIMING CONDITION PARAMETER		VALUE	UNIT
Input Conditions			
t_R	Input signal rise time	10	ns
t_F	Input signal fall time	10	ns
Output Condition			
C_{LOAD}	Output load capacitance(1)	40	pF

(1) Buffer strength configuration: SPEEDCTRL = 1.

Table 6-116. MMC1 Interface Timing Requirements—Standard SD Mode(1) (2) (4)

NO.	PARAMETER		OPP100		OPP50		UNIT
			MIN	MAX	MIN	MAX	
MMC1 Interface (1.8-V IO)							
SD3	$t_{su(CMDV-CLKIH)}$	Setup time, mmc1_cmd valid before mmc1_clk rising clock edge	3.3		21.9		ns
SD4	$t_{h(CLKIH-CMDIV)}$	Hold time, mmc1_cmd valid after mmc1_clk rising clock edge	18.1		36.7		ns
SD7	$t_{su(DATxV-CLKIH)}$	Setup time, mmc1_dat[n:0](3) valid before mmc1_clk rising clock edge	3.3		21.9		ns
SD8	$t_{h(CLKIH-DATxIV)}$	Hold time, mmc1_dat[n:0](3) valid after mmc1_clk rising clock edge	18.1		36.7		ns
MMC1 Interface (3.0-V IO)							
SD3	$t_{su(CMDV-CLKIH)}$	Setup time, mmc1_cmd valid before mmc1_clk rising clock edge	3.3		21.9		ns

Copyright © 2010–2011, Texas Instruments Incorporated

Table 6-116. MMC1 Interface Timing Requirements—Standard SD Mode[(1) (2) (4)] (continued)

NO.	PARAMETER		OPP100		OPP50		UNIT
			MIN	MAX	MIN	MAX	
SD4	$t_{h(CLKIH-CMDIV)}$	Hold time, mmc1_cmd valid after mmc1_clk rising clock edge	18.1		36.7		ns
SD7	$t_{su(DATxV-CLKIH)}$	Setup time, mmc1_dat[n:0][(3)] valid before mmc1_clk rising clock edge	3.3		21.9		ns
SD8	$t_{h(CLKIH-DATxIV)}$	Hold time, mmc1_dat[n:0][(3)] valid after mmc1_clk rising clock edge	18.1		36.7		ns

(1) Timing parameters are referred to output clock specified in Table 6-117.
(2) The timing requirements are assured for the cycle jitter and duty cycle error conditions specified in Table 6-117.
(3) In mmc1_dat[n:0], n is equal to 3.
(4) See Section 4.3.4, *Processor Clocks*.

Table 6-117. MMC1 Interface Switching Characteristics—Standard SD Mode[(7)]

NO.	PARAMETER		OPP100		OPP50		UNIT
			MIN	MAX	MIN	MAX	
Standard SD Mode							
SD1	$t_{c(clk)}$	Frequency[(1)], output clock period		24		12	MHz
SD2	$t_{W(clkH)}$	Typical pulse duration, output clock high	X[(4)]*PO[(2)]		X[(4)]*PO[(2)]		ns
SD2	$t_{W(clkL)}$	Typical pulse duration, output clock low	Y[(5)]*PO[(2)]		Y[(5)]*PO[(2)]		ns
	$t_{dc(clk)}$	Duty cycle error, output clock		2083.33		4166.67	ps
	$t_{J(clk)}$	Jitter standard deviation[(3)], output clock		200		200	ps
MMC1 Interface (1.8-V)							
	$t_{R(clk)}$	Rise time, output clock		10		10	ns
	$t_{F(clk)}$	Fall time, output clock		10		10	ns
	$t_{R(data)}$	Rise time, output data		10		10	ns
	$t_{F(data)}$	Fall time, output data		10		10	ns
SD5	$t_{d(CLKOH-CMD)}$	Delay time, mmc1_clk rising clock edge to mmc1_cmd transition	6.13	35.53	6.3	77.03	ns
SD6	$t_{d(CLKOH-DATx)}$	Delay time, mmc1_clk rising clock edge to mmc1_dat[n:0][(6)] transition	6.13	35.53	6.3	77.03	ns
MMC1 Interface (3.0-V)							
	$t_{R(clk)}$	Rise time, output clock		10		10	ns
	$t_{F(clk)}$	Fall time, output clock		10		10	ns
	$t_{R(data)}$	Rise time, output data		10		10	ns
	$t_{F(data)}$	Fall time, output data		10		10	ns
SD5	$t_{d(CLKOH-CMD)}$	Delay time, mmc1_clk rising clock edge to mmc1_cmd transition	6.13	35.53	6.3	77.03	ns
SD6	$t_{d(CLKOH-DATx)}$	Delay time, mmc1_clk rising clock edge to mmc1_dat[n:0][(6)] transition	6.13	35.53	6.3	77.03	ns

(1) Related with the output clock maximum and minimum frequencies programmable in MMC module.
(2) PO = output clock period in ns
(3) The jitter probability density can be approximated by a Gaussian function.
(4) The X parameter is defined as follows:

CLKD	X
1 or Even	0.5
Odd	(trunk[CLKD/2]+1)/CLKD

All required details about clock division factor CLKD can be found in the *AM/DM37x Multimedia Device Technical Reference Manual* (literature number SPRUGN4).

(5) The Y parameter is defined as follows:

CLKD	Y
1 or Even	0.5
Odd	(trunk[CLKD/2])/CLKD

All required details about clock division factor CLKD can be found in the *AM/DM37x Multimedia Device Technical Reference Manual* (literature number SPRUGN4).

(6) In mmc1_dat[n:0], n is equal to 3.

(7) See Section 4.3.4, *Processor Clocks*.

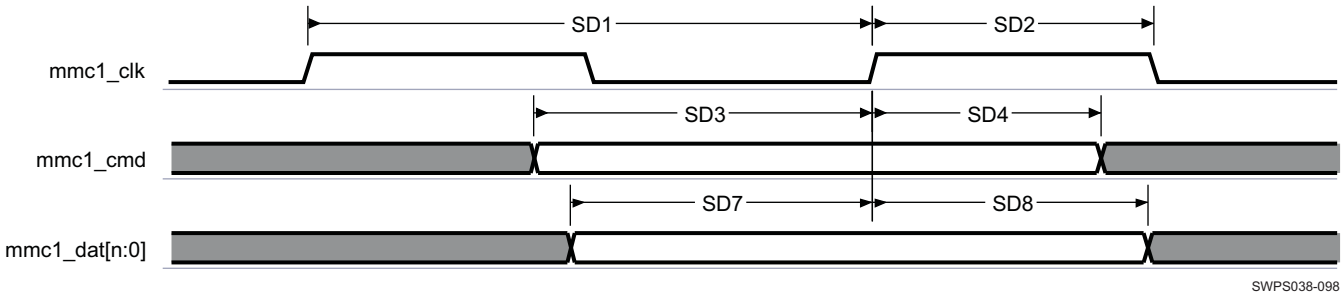

Figure 6-67. MMC1 Interface—Standard SD Mode—Data/Command Receive

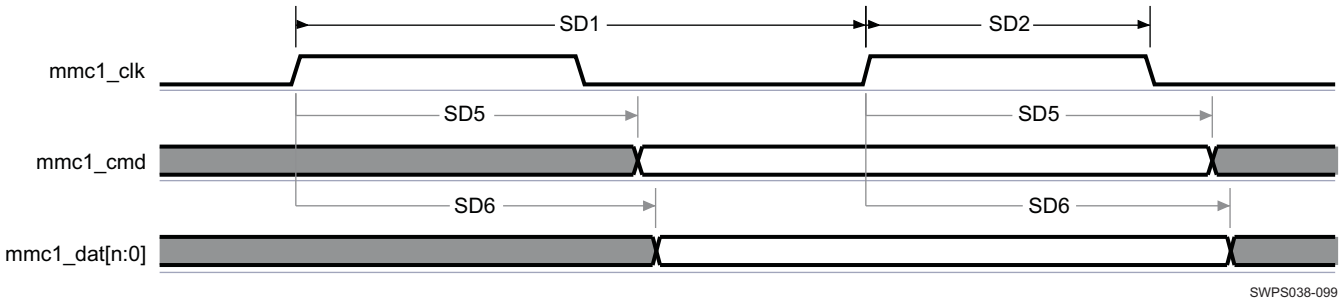

Figure 6-68. MMC1 Interface—Standard SD Mode—Data/Command Transmit

6.6.8.1.4 MMC1 Interface—Standard MMC and MMC Identification Modes

Table 6-119 and Table 6-120 assume testing over the recommended operating conditions and electrical characteristic conditions below (see Figure 6-69 and Figure 6-70).

Copyright © 2010–2011, Texas Instruments Incorporated

Table 6-118. MMC1 Interface Timing Conditions—Standard MMC and MMC Identification Modes

TIMING CONDITION PARAMETER		VALUE	UNIT
Input Conditions			
t_R	Input signal rise time	3	ns
t_F	Input signal fall time	3	ns
Output Conditions			
C_{LOAD}	Output load capacitance[1]	30	pF

(1) Buffer strength configuration: SPEEDCTRL = 1.

Table 6-119. MMC1 Interface Timing Requirements—Standard MMC and MMC Identification Modes[2] [3] [4]

NO.	PARAMETER		OPP100		OPP50		UNIT
			MIN	MAX	MIN	MAX	
MMC1 Interface (1.8-V IO)							
MMC3	$t_{su(CMDV-CLKIH)}$	Setup time, mmc1_cmd valid before mmc1_clk rising clock edge	13.6		55.1		ns
MMC4	$t_{h(CLKIH-CMDIV)}$	Hold time, mmc1_cmd valid after mmc1_clk rising clock edge	7.7		7.5		ns
MMC7	$t_{su(DATxV-CLKIH)}$	Setup time, mmc1_dat[n:0][1] valid before mmc1_clk rising clock edge	13.6		55.1		ns
MMC8	$t_{h(CLKIH-DATxIV)}$	Hold time, mmc1_dat[n:0][1] valid after mmc1_clk rising clock edge	7.7		7.5		ns
MMC1 Interface (3.0-V IO)							
MMC3	$t_{su(CMDV-CLKIH)}$	Setup time, mmc1_cmd valid before mmc1_clk rising clock edge	13.6		55.1		ns
MMC4	$t_{h(CLKIH-CMDIV)}$	Hold time, mmc1_cmd valid after mmc1_clk rising clock edge	7.7		7.5		ns
MMC7	$t_{su(DATxV-CLKIH)}$	Setup time, mmc1_dat[n:0][1] valid before mmc1_clk rising clock edge	13.6		55.1		ns
MMC8	$t_{h(CLKIH-DATxIV)}$	Hold time, mmc1_dat[n:0][1] valid after mmc1_clk rising clock edge	7.7		7.5		ns

(1) In mmc1_dat[n:0], n is equal to 3.

(2) Timing parameters are referred to output clock specified in Table 6-120.

(3) The timing requirements are assured for the cycle jitter and duty cycle error conditions specified in Table 6-120.

(4) See Section 4.3.4, *Processor Clocks*.

Table 6-120. MMC1 Interface Switching Characteristics—Standard MMC and MMC Identification Modes[7]

NO.	PARAMETER		OPP100		OPP50		UNIT
			MIN	MAX	MIN	MAX	
MMC Identification Mode							
MMC1	$1/t_{c(clk)}$	Frequency[1], output clk period		0.4		0.4	MHz
MMC2	$t_{W(clkH)}$	Typical pulse duration, output clk high	X[5]*PO[2]		X[5]*PO[2]		ns
MMC2	$t_{W(clkL)}$	Typical pulse duration, output clk low	Y[6]*PO[2]		Y[6]*PO[2]		ns
	$t_{dc(clk)}$	Duty cycle error, output clk		125		125	ns
	$t_{J(clk)}$	Jitter standard deviation[3], output clk		200		200	ps
Standard MMC Identification Mode							
MMC1	$t_{c(clk)}$	Frequency[1], output clk period		24		12	MHz
MMC2	$t_{W(clkH)}$	Typical pulse duration, output clk high	X[5]*PO[2]		X[5]*PO[2]		ns
MMC2	$t_{W(clkL)}$	Typical pulse duration, output clk low	Y[6]*PO[2]		Y[6]*PO[2]		ns
	$t_{dc(clk)}$	Duty cycle error, output clk		2083.3		4166.7	ps
	$t_{J(clk)}$	Jitter standard deviation[3], output clk		200		200	ps
MMC1 Interface (1.8-V IO)							
	$t_{R(clk)}$	Rise time, output clk		10		10	ns

Table 6-120. MMC1 Interface Switching Characteristics—Standard MMC and MMC Identification Modes[7] (continued)

NO.	PARAMETER		OPP100		OPP50		UNIT
			MIN	MAX	MIN	MAX	
	$t_{F(clk)}$	Fall time, output clk		10		10	ns
	$t_{R(data)}$	Rise time, output data		10		10	ns
	$t_{F(data)}$	Fall time, output data		10		10	ns
MMC5	$t_{d(CLKOH-CMD)}$	Delay time, mmc1_clk rising clock edge to mmc1_cmd transition	4.1	37.6	4.3	79	ns
MMC6	$t_{d(CLKOH-DATx)}$	Delay time, mmc1_clk rising clock edge to mmc1_dat[n:0][4] transition	4.1	37.6	4.3	79	ns
MMC1 Interface (3.0-V IO)							
	$t_{R(clk)}$	Rise time, output clk		10		10	ns
	$t_{F(clk)}$	Fall time, output clk		10		10	ns
	$t_{R(data)}$	Rise time, output data		10		10	ns
	$t_{F(data)}$	Fall time, output data		10		10	ns
MMC5	$t_{d(CLKOH-CMD)}$	Delay time, mmc1_clk rising clock edge to mmc1_cmd transition	4.1	37.6	4.3	79	ns
MMC6	$t_{d(CLKOH-DATx)}$	Delay time, mmc1_clk rising clock edge to mmc1_dat[n:0][4] transition	4.1	37.6	4.3	79	ns

(1) Related with the output clock maximum and minimum frequencies programmable in MMC module.

(2) PO = output clock period in ns

(3) The jitter probability density can be approximated by a Gaussian function.

(4) In mmc1_dat[n:0], n is equal to 3.

(5) The X parameter is defined as follows:

CLKD	X
1 or Even	0.5
Odd	(trunk[CLKD/2]+1)/CLKD

All required details about clock division factor CLKD can be found in the *AM/DM37x Multimedia Device Technical Reference Manual* (literature number SPRUGN4).

(6) The Y parameter is defined as follows:

CLKD	Y
1 or Even	0.5
Odd	(trunk[CLKD/2])/CLKD

All required details about clock division factor CLKD can be found in the *AM/DM37x Multimedia Device Technical Reference Manual* (literature number SPRUGN4).

(7) See Section 4.3.4, *Processor Clocks*.

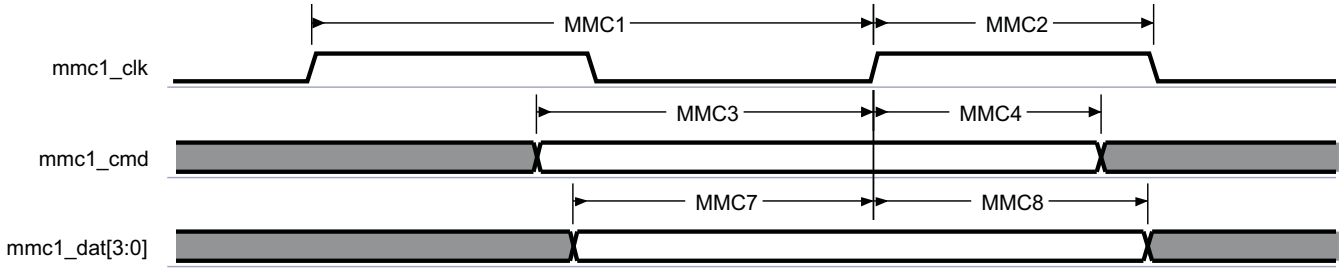

Figure 6-69. MMC1 Interface—Standard MMC and MMC Identification Modes—Data/Command Receive

Copyright © 2010–2011, Texas Instruments Incorporated

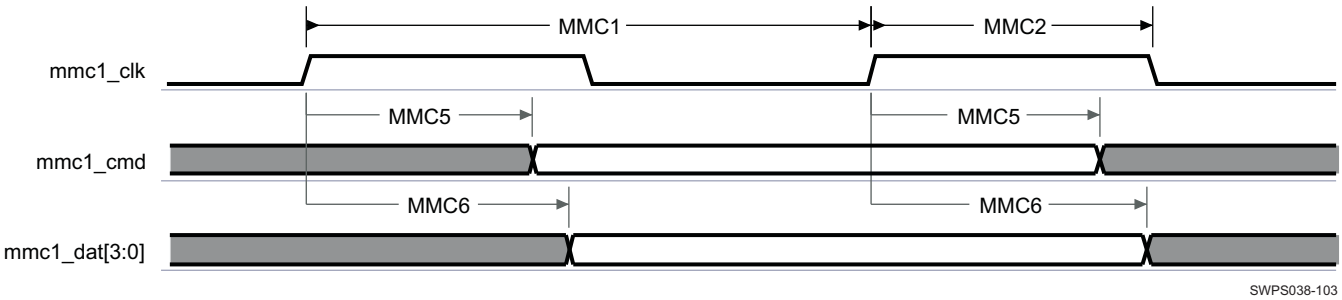

Figure 6-70. MMC1 Interface—Standard MMC and MMC Identification Modes—Data/Command Transmit

6.6.8.1.5 MMC1 Interface—High-Speed MMC Mode

Table 6-122 and Table 6-123 assume testing over the recommended operating conditions and electrical characteristic conditions below (see Figure 6-71 and Figure 6-72).

Table 6-121. MMC1 Interface Timing Conditions—High-Speed MMC Mode

TIMING CONDITION PARAMETER		VALUE	UNIT
Input Conditions			
t_R	Input signal rise time	3	ns
t_F	Input signal fall time	3	ns
Output Conditions			
C_{LOAD}	Output load capacitance(1)	30	pF

(1) The load setting of the IO buffer: SPEEDCTRL = 1.

Table 6-122. MMC1 Interface Timing Requirements—High-Speed MMC Mode(2) (3) (4) (5)

NO.	PARAMETER		OPP100		OPP50		UNIT
			MIN	MAX	MIN	MAX	
MMC1 Interface (1.8-V IO)							
MMC3	$t_{su(CMDV-CLKIH)}$	Setup time, mmc1_cmd valid before mmc1_clk rising clock edge	5.6		26.0		ns
MMC4	$t_{h(CLKIH-CMDIV)}$	Hold time, mmc1_cmd valid after mmc1_clk rising clock edge	2.3		1.9		ns
MMC7	$t_{su(DATxV-CLKIH)}$	Setup time, mmc1_dat[n:0](1) valid before mmc1_clk rising clock edge	5.6		26.0		ns
MMC8	$t_{h(CLKIH-DATxIV)}$	Hold time, mmc1_dat[n:0](1) valid after mmc1_clk rising clock edge	2.3		1.9		ns
MMC1 Interface (3.0-V IO)							
MMC3	$t_{su(CMDV-CLKIH)}$	Setup time, mmc1_cmd valid before mmc1_clk rising clock edge	5.6		26.0		ns
MMC4	$t_{h(CLKIH-CMDIV)}$	Hold time, mmc1_cmd valid after mmc1_clk rising clock edge	2.3		1.9		ns
MMC7	$t_{su(DATxV-CLKIH)}$	Setup time, mmc1_dat[n:0](1) valid before mmc1_clk rising clock edge	5.6		26.0		ns
MMC8	$t_{h(CLKIH-DATxIV)}$	Hold time, mmc1_dat[n:0](1) valid after mmc1_clk rising clock edge	2.3		1.9		ns

(1) In mmc1_dat[n:0], n is equal to 3.
(2) Timing parameters are referred to output clock specified in Table 6-123.
(3) The timing requirements are assured for the cycle jitter and duty cycle error conditions specified in Table 6-123.
(4) Corresponding figures showing timing parameters are common with the Standard MMC mode figures.
(5) See Section 4.3.4, *Processor Clocks*.

Table 6-123. MMC1 Interface Switching Characteristics—High-Speed MMC Mode[4] [8]

NO.	PARAMETER		OPP100		OPP50		UNIT
			MIN	MAX	MIN	MAX	
MMC1	$t_{c(clk)}$	Frequency[1], output clk period		48		24	MHz
MMC2	$t_{W(clkH)}$	Typical pulse duration, output clk high	X[6]*PO[2]		X[6]*PO[2]		ns
MMC2	$t_{W(clkL)}$	Typical pulse duration, output clk low	Y[7]*PO[2]		Y[7]*PO[2]		ns
	$t_{dc(clk)}$	Duty cycle error, output clk		1041.7		2083.3	ps
	$t_{J(clk)}$	Jitter standard deviation[3], output clk		200		200	ps
MMC1 Interface (1.8-V IO)							
	$t_{R(clk)}$	Rise time, output clk		3		3	ns
	$t_{F(clk)}$	Fall time, output clk		3		3	ns
	$t_{R(data)}$	Rise time, output data		3		3	ns
	$t_{F(data)}$	Fall time, output data		3		3	ns
MMC5	$t_{d(CLKOH-CMD)}$	Delay time, mmc1_clk rising clock edge to mmc1_cmd transition	3.7	14.1	4.1	34.5	ns
MMC6	$t_{d(CLKOH-DATx)}$	Delay time, mmc1_clk rising clock edge to mmc1_dat[n:0][5] transition	3.7	14.1	4.1	34.5	ns
MMC1 Interface (3.0-V IO)							
	$t_{R(clk)}$	Rise time, output clk		3		3	ns
	$t_{F(clk)}$	Fall time, output clk		3		3	ns
	$t_{R(data)}$	Rise time, output data		3		3	ns
	$t_{F(clk)}$	Fall time, output data		3		3	ns
MMC5	$t_{d(CLKOH-CMD)}$	Delay time, mmc1_clk rising clock edge to mmc1_cmd transition	3.7	14.1	4.1	34.5	ns
MMC6	$t_{d(CLKOH-DATx)}$	Delay time, mmc1_clk rising clock edge to mmc1_dat[n:0][5] transition	3.7	14.1	4.1	34.5	ns

(1) Related with the output clock maximum and minimum frequencies programmable in MMC module.

(2) PO = output clock period in ns

(3) The jitter probability density can be approximated by a Gaussian function.

(4) Corresponding figures showing timing parameters are common with the Standard MMC mode figures.

(5) In MMC1_dat[n:0], n is equal to 3.

(6) The X parameter is defined as follows:

CLKD	X
1 or Even	0.5
Odd	(trunk[CLKD/2]+1)/CLKD

All required details about clock division factor CLKD can be found in the *AM/DM37x Multimedia Device Technical Reference Manual* (literature number SPRUGN4).

(7) The Y parameter is defined as follows:

CLKD	Y
1 or Even	0.5
Odd	(trunk[CLKD/2])/CLKD

All required details about clock division factor CLKD can be found in the *AM/DM37x Multimedia Device Technical Reference Manual* (literature number SPRUGN4).

(8) See Section 4.3.4, *Processor Clocks*.

Copyright © 2010–2011, Texas Instruments Incorporated

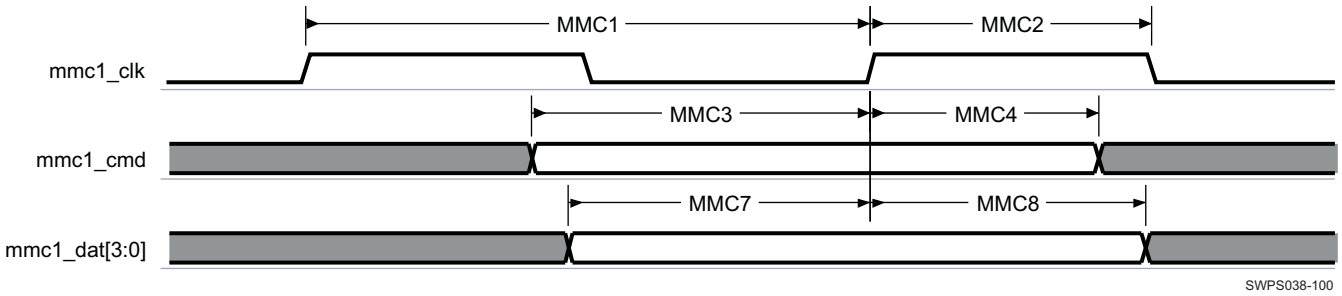

Figure 6-71. MMC1 Interface—High-Speed MMC Mode—Data/Command Receive

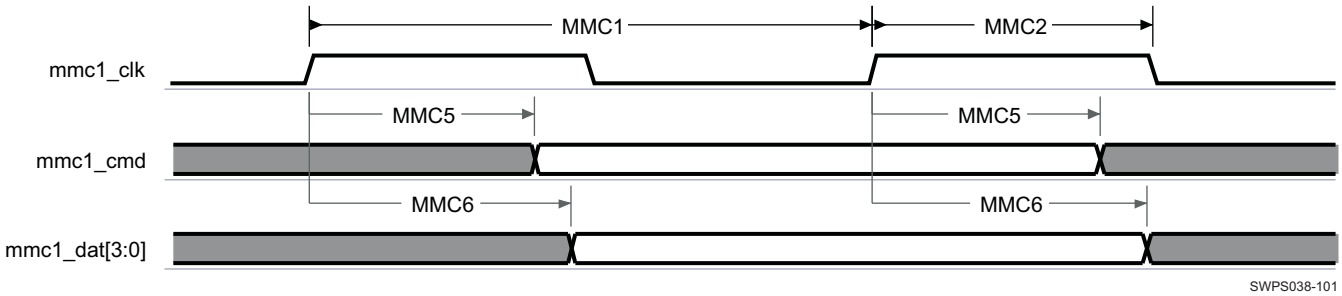

Figure 6-72. MMC1 Interface—High-Speed MMC Mode—Data/Command Transmit

6.6.8.1.6 MMC2 and MMC3 Interfaces—SDIO Identification Mode

Table 6-125 and Table 6-126 assume testing over the recommended operating conditions and electrical characteristic conditions below (see Figure 6-73 and Figure 6-74).

Table 6-124. MMC2 and MMC3 Interfaces Timing Conditions—SDIO Identification Mode

TIMING CONDITION PARAMETER		VALUE	UNIT
Input Conditions			
t_R	Input signal rise time	10	ns
t_F	Input signal fall time	10	ns
Output Condition			
C_{LOAD}	Output load capacitance[(1)]	5	pF

(1) Buffer strength configuration: LB0 = 0

Table 6-125. MMC2 and MMC3 Interfaces Timing Requirements—SDIO Identification Mode[(1)(2)]

NO.	PARAMETER		OPP100		OPP50		UNIT
			MIN	MAX	MIN	MAX	
MMC2 and MMC3 Interface (1.8-V IO)							
SD3	$t_{su(CMDV-CLKIH)}$	Setup time, mmcx_cmd valid before mmcx_clk rising clock edge	1198.4		1198.4		ns
SD4	$t_{h(CLKIH-CMDIV)}$	Hold time, mmcx_cmd valid after mmcx_clk rising clock edge	1249.2		1249.2		ns

(1) See Section 4.3.4, *Processor Clocks*.

(2) In mmcx, x is equal to 2 or 3.

Table 6-126. MMC2 and MMC3 Interfaces Switching Characteristics—SDIO Identification Mode[(4)(7)(7)]

NO.	PARAMETER		OPP100		OPP50		UNIT
			MIN	MAX	MIN	MAX	
Standard SDIO Mode							
SD1	$t_{c(clk)}$	Frequency[(1)], output clock period		0.4		0.4	MHz
SD2	$t_{W(clkH)}$	Typical pulse duration, output clock high	X[(5)] * PO[(2)]		X[(5)] * PO[(2)]		ns
SD2	$t_{W(clkL)}$	Typical pulse duration, output clock low	Y[(6)] * PO[(2)]		Y[(6)] * PO[(2)]		ns
	$t_{dc(clk)}$	Duty cycle error, output clock		125		125	ns
	$t_{J(clk)}$	Jitter standard deviation[(3)], output clock		200		200	ps
	$t_{R(clk)}$	Rise time, output clock		10		10	ns
	$t_{F(clk)}$	Fall time, output clock		10		10	ns
	$t_{R(data)}$	Rise time, output data		10		10	ns
	$t_{F(data)}$	Fall time, output data		10		10	ns
SD5	$t_{d(CLKOH-CMD)}$	Delay time, mmcx_clk rising clock edge to mmcx_cmd transition	6.3	2492.7	6.3	77.03	ns

(1) Related to the output mmcx_clk maximum and minimum frequency.

(2) P = output mmcx_clk period in ns

(3) The jitter probability density can be approximated by a Gaussian function.

(4) Corresponding figures showing timing parameters are common with other interface modes (see SDIO, HS SDIO modes).

(5) The X parameter is defined as follows:

CLKD	X
1 or Even	0.5
Odd	(trunk[CLKD/2]+1)/CLKD

All required details about clock division factor CLKD can be found in the *AM/DM37x Multimedia Device Technical Reference Manual* (literature number SPRUGN4).

(6) The Y parameter is defined as follows:

CLKD	Y
1 or Even	0.5
Odd	(trunk[CLKD/2])/CLKD

All required details about clock division factor CLKD can be found in the *AM/DM37x Multimedia Device Technical Reference Manual* (literature number SPRUGN4).

(7) In mmcx, x is equal to 2 or 3.

6.6.8.1.7 MMC2 and MMC3 Interfaces—High-Speed SDIO Mode

Table 6-128 and Table 6-129 assume testing over the recommended operating conditions and electrical characteristic conditions below (see Figure 6-73 and Figure 6-74).

Table 6-127. MMC2 and MMC3 Interfaces Timing Conditions—High-Speed SDIO Mode

TIMING CONDITION PARAMETER		VALUE		UNIT
		MIN	MAX	
Input Conditions				
t_R	Input signal rise time	0.18	5.69	ns
t_F	Input signal fall time	0.19	5.70	ns
Output Condition				
C_{LOAD}	Output load capacitance[(1)]	5		pF

Copyright © 2010–2011, Texas Instruments Incorporated

(1) Buffer strength configuration for MMC2 and MMC3: LB0 = 0.

Table 6-128. MMC2 and MMC3 Interfaces Timing Requirements—High-Speed SDIO Mode[(2)]

NO.	PARAMETER		OPP100		OPP50		UNIT
			MIN	MAX	MIN	MAX	
HSSD3	$t_{su(dV-clkH)}$	Setup time, mmcx_cmd valid before mmcx_clk rising clock edge	3.4		23.8		ns
HSSD4	$t_{h(clkH-dV)}$	Hold time, mmcx_cmd valid after mmcx_clk rising clock edge	1.7		1.3		ns
HSSD7	$t_{su(dV-clkH)}$	Setup time, mmcx_dat[n:0][(1)] valid before mmcx_clk rising clock edge	3.4		23.8		ns
HSSD8	$t_{h(clkH-dV)}$	Hold time, mmcx_dat[n:0][(1)] valid after mmcx_clk rising clock edge	1.7		1.3		ns

(1) In mmcx_dat[n:0], n is equal to 3 for mmc2 and 7 for mmc3.
(2) See Section 4.3.4, *Processor Clocks*.

Table 6-129. MMC2 and MMC3 Interfaces Switching Characteristics—High-Speed SDIO Mode[(2) (5)]

NO.	PARAMETER		OPP100		OPP50		UNIT
			MIN	MAX	MIN	MAX	
HSSD1	$t_{c(clk)}$	Frequency[(1)], output mmcx_clk period		48		24	MHz
HSSD2	$t_{W(clkH)}$	Typical pulse duration, output mmcx_clk high	0.5*P[(3)]		0.5*P[(3)]		ns
HSSD2	$t_{W(clkL)}$	Typical pulse duration, output mmcx_clk low	0.5*P[(3)]		0.5*P[(3)]		ns
	$t_{dc(clk)}$	Duty cycle error, output mmcx_clk	–1042	1042	–2083	2083	ps
	$t_{J(clk)}$	Jitter standard deviation[(4)], output mmcx_clk	–65	65	–65	65	ps
HSSD5	$t_{d(clkL-doV)}$	Delay time, mmcx_clk rising clock edge to mmcx_cmd transition	2.6	13.8	3	34.3	ns
HSSD6	$t_{d(clkL-doV)}$	Delay time, mmcx_clk rising clock edge to mmcx_dat[n:0][(2)] transition	2.6	13.8	3	34.3	ns

(1) Related with the output mmcx_clk maximum and minimum frequency.
(2) In mmcx, x = 2 or 3. In mmcx_dat[n:0], n is equal to 3 for mmc2 and 7 for mmc3.
(3) P = output mmcx_clk period in ns.
(4) The jitter probability density can be approximated by a Gaussian function.
(5) See Section 4.3.4, *Processor Clocks*.

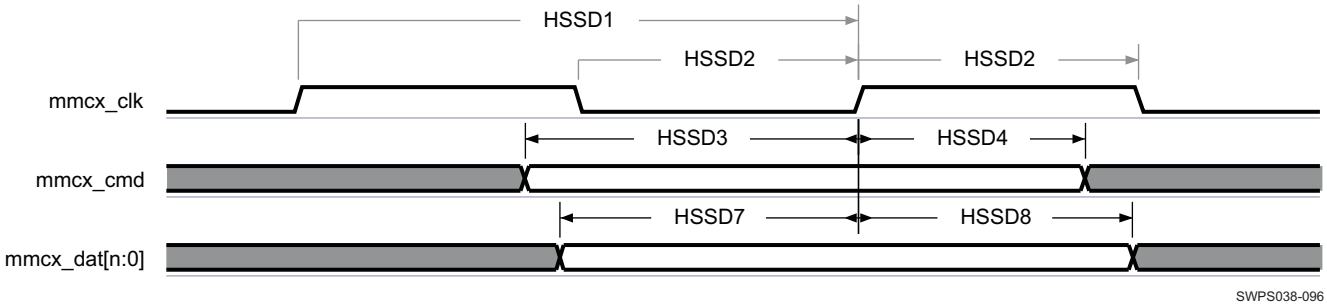

Figure 6-73. MMC2 and MMC3 Interfaces—High-Speed SDIO Mode—Data/Command Receive[(1)]

(1) In mmcx, x = 2 or 3. In mmcx_dat[n:0], n is equal to 3 for mmc2 and 7 for mmc3.

Figure 6-74. MMC2 and MMC3 Interfaces—High-Speed SDIO Mode—Data/Command Transmit[(1)]

(1) In mmcx, x = 2 or 3. In mmcx_dat[n:0], n is equal to 3 for mmc2 and 7 for mmc3.

6.6.8.1.8 MMC2 and MMC3 Interfaces—Standard SDIO Mode

Table 6-131 and Table 6-132 assume testing over the recommended operating conditions and electrical characteristic conditions below (see Figure 5-89 and Figure 5-90).

Table 6-130. MMC2 and MMC3 Interfaces Timing Conditions—Standard SDIO Mode

TIMING CONDITION PARAMETER		VALUE	UNIT
Input Conditions			
t_R	Input signal rise time	10	ns
t_F	Input signal fall time	10	ns
Output Condition			
C_{LOAD}	Output load capacitance[(1)]	5	pF

(1) Buffer strength configuration: SPEEDCTRL = 1

Table 6-131. MMC2 and MMC3 Interfaces Timing Requirements—Standard SDIO Mode[(2)(3)]

NO.	PARAMETER		OPP100		OPP50		UNIT
			MIN	MAX	MIN	MAX	
MMC2 and MMC3 Interface (1.8-V IO)							
SD3	$t_{su(CMDV-CLKIH)}$	Setup time, mmcx_cmd valid before mmcx_clk rising clock edge	3.3		21.9		ns
SD4	$t_{h(CLKIH-CMDIV)}$	Hold time, mmcx_cmd valid after mmcx_clk rising clock edge	18.1		36.7		ns
SD7	$t_{su(DATxV-CLKIH)}$	Setup time, mmcx_dat[n:0][(1)] valid before mmcx_clk rising clock edge	3.3		21.9		ns
SD8	$t_{h(CLKIH-DATxIV)}$	Hold time, mmcx_dat[n:0][(1)] valid after mmcx_clk rising clock edge	18.1		36.7		ns

(1) In mmcx_dat[n:0], n is equal to 3 for MMC2 and 7 for MMC3.

(2) See Section 4.3.4, *Processor Clocks*.

(3) In mmcx, x is equal to 2 or 3.

Table 6-132. MMC2 and MMC3 Interfaces Switching Characteristics—Standard SDIO Mode[(6)(7)]

NO.	PARAMETER		OPP100		OPP50		UNIT
			MIN	MAX	MIN	MAX	
Standard SDIO Mode							
SD1	$t_{c(clk)}$	Frequency[(1)], output clock period		24		12	MHz
SD2	$t_{W(clkH)}$	Typical pulse duration, output clock high	X[(4)] * PO[(2)]		X[(4)] * PO[(2)]		ns
SD2	$t_{W(clkL)}$	Typical pulse duration, output clock low	Y[(5)] * PO[(2)]		Y[(5)] * PO[(2)]		ns
	$t_{dc(clk)}$	Duty cycle error, output clock		2083.33		4166.67	ps

Copyright © 2010–2011, Texas Instruments Incorporated

Table 6-132. MMC2 and MMC3 Interfaces Switching Characteristics—Standard SDIO Mode[(6)(7)] (continued)

NO.	PARAMETER		OPP100		OPP50		UNIT
			MIN	MAX	MIN	MAX	
	$t_{J(clk)}$	Jitter standard deviation[(3)], output clock		200		200	ps
	$t_{R(clk)}$	Rise time, output clock		10		10	ns
	$t_{F(clk)}$	Fall time, output clock		10		10	ns
	$t_{R(data)}$	Rise time, output data		10		10	ns
	$t_{F(data)}$	Fall time, output data		10		10	ns
SD5	$t_{d(CLKOH-CMD)}$	Delay time, mmcx_clk rising clock edge to mmcx_cmd transition	6.13	35.53	6.3	77.03	ns
SD6	$t_{d(CLKOH-DATx)}$	Delay time, mmcx_clk rising clock edge to mmcx_dat[n:0][(6)] transition	6.13	35.53	6.3	77.03	ns

(1) Related to the output mmcx_clk maximum and minimum frequency.

(2) P = output mmcx_clk period in ns

(3) The jitter probability density can be approximated by a Gaussian function.

(4) The X parameter is defined as follows:

CLKD	X
1 or Even	0.5
Odd	(trunk[CLKD/2]+1)/CLKD

All required details about clock division factor CLKD can be found in the *AM/DM37x Multimedia Device Technical Reference Manual* (literature number SPRUGN4).

(5) The Y parameter is defined as follows:

CLKD	Y
1 or Even	0.5
Odd	(trunk[CLKD/2])/CLKD

All required details about clock division factor CLKD can be found in the *AM/DM37x Multimedia Device Technical Reference Manual* (literature number SPRUGN4).

(6) In mmcx, x is equal to 2 or 3. In mmcx_dat[n :0] is equal to 3 for mmc2 and 7 for mmc3.

(7) See Section 4.3.4, *Processor Clocks*.

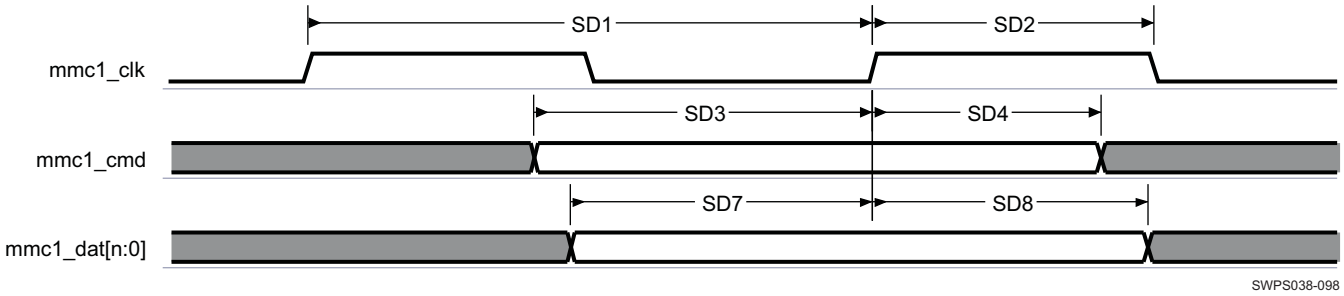

Figure 6-75. MMC2 and MMC3 Interfaces—Standard SDIO Mode—Data/Command Receive[(1)]

(1) In mmcx, x is equal to 2 or 3. In mmcx_dat[n:0] is equal to 3 for MMC2 and 7 for MMC3.

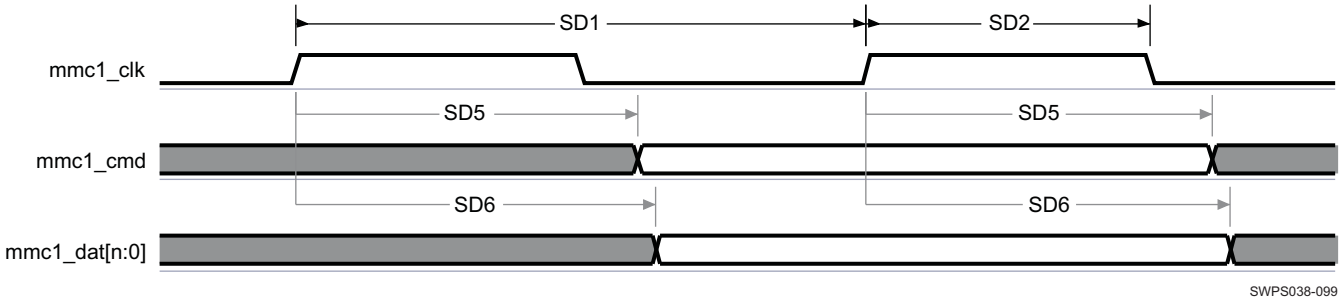

Figure 6-76. MMC2 and MMC3 Interfaces—Standard SDIO Mode—Data/Command Transmit[(1)]

(1) In mmcx, x is equal to 2 or 3. In mmcx_dat[n:0] is equal to 3 for MMC2 and 7 for MMC3.

6.6.8.1.9 MMC2 and MMC3 Interfaces—Embedded Media Interface (eMMC)—High-Speed JC64 Mode

Table 6-134 and Table 6-135 assume testing over the recommended operating conditions and electrical characteristic conditions below (see Figure 6-77 through Figure 6-78).

Table 6-133. MMC2 and MMC3 Interfaces Timing Conditions—High-Speed JC64 Mode

TIMING CONDITION PARAMETER		VALUE		UNIT
		MIN	MAX	
Input Conditions				
t_R	Input signal rise time	0.38	3.82	ns
t_F	Input signal fall time	0.39	3.68	ns
Output Condition				
C_{LOAD}	Output load capacitance[(1)]	14		pF

(1) Buffer strength configuration for MMC3: LB0 = 1.

Table 6-134. MMC2 and MMC3 Interfaces Timing Requirements—High-Speed JC64 Mode[(1)]

NO.	PARAMETER		OPP100		OPP50		UNIT
			MIN	MAX	MIN	MAX	
MMC3	$t_{su(cmdV-clkH)}$	Setup time, input command mmcx_cmd valid before output clock mmcx_clk rising edge	5.1		25.5		ns
MMC4	$t_{h(clkH-cmdIV)}$	Hold time, input command mmcx_cmd valid after output clock mmcx_clk rising edge	1.3		0.9		ns
MMC7	$t_{su(dV-clkH)}$	Setup time, input data mmcx_dat[n:0] valid before output clock mmcx_clk rising edge	5.1		25.5		ns
MMC8	$t_{h(clkH-dIV)}$	Hold time, input data mmcx_dat[n:0] valid after output clock mmcx_clk rising edge	1.3		0.9		ns

(1) In mmx_dat[n:0], x is equal to 2 or 3 and n is equal to 7.

(2) In mmx_cmd, x is equal to 2 or 3.

(3) In mmx_clk, x is equal to 2 or 3.

Table 6-135. MMC2 and MMC3 Interfaces Switching Characteristics—High-Speed JC64 Mode[(5)] [(6)(7)]

NO.	PARAMETER		OPP100		OPP50		UNIT
			MIN	MAX	MIN	MAX	
MMC1	$1/t_{c(clk)}$	Frequency[(1)], output mmcx_clk period		48		24	MHz
MMC2	$t_{W(clkH)}$	Typical pulse duration, output mmcx_clk high	0.5*P[(2)]		0.5*P[(2)]		ns
MMC2	$t_{W(clkL)}$	Typical pulse duration, output mmcx_clk low	0.5*P[(2)]		0.5*P[(2)]		ns
	$t_{dc(clk)}$	Duty cycle error, output mmcx_clk	–1042	1042	–2083	2083	ps
	$t_{J(clk)}$	Jitter standard deviation[(3)], output mmcx_clk	–65	65	–65	65	ps
	$t_{R(clk)}$	Rising time, output mmcx_clk		2263		2263	ps
	$t_{F(clk)}$	Falling time, output mmcx_clk		2136		2136	ps

Copyright © 2010–2011, Texas Instruments Incorporated

Table 6-135. MMC2 and MMC3 Interfaces Switching Characteristics—High-Speed JC64 Mode[5] [6][7] (continued)

NO.	PARAMETER		OPP100		OPP50		UNIT
			MIN	MAX	MIN	MAX	
MMC5	$t_{d(clkL-doV)}$	Delay time, mmcx_clk rising clock edge to mmcx_cmd transition	3.6	16.8	4	37.2	ns
	$t_{R(do)}$	Rising time, output mmcx_cmd		2263		2263	ps
	$t_{F(do)}$	Falling time, output mmcx_cmd		2136		2136	ps
MMC6	$t_{d(clkL-doV)}$	Delay time, mmcx_clk rising clock edge to mmcx_daty transition	3.6	16.8	4	37.2	ns
	$t_{R(do)}$	Rising time, output mmcx_dat[n:0][4]		2263		2263	ps
	$t_{F(do)}$	Falling time, output mmcx_dat[n:0][4]		2136		2136	ps

(1) Related with the output clock maximum and minimum frequencies programmable in MMC module.
(2) PO = output clock period in ns
(3) The jitter probability density can be approximated by a Gaussian function.
(4) In mmx_dat[n:0], x is equal to 2 or 3 and n is equal to 7.
(5) See Section 4.3.4, *Processor Clocks*.
(6) In mmx_cmd, x is equal to 2 or 3.
(7) In mmx_clk, x is equal to 2 or 3.

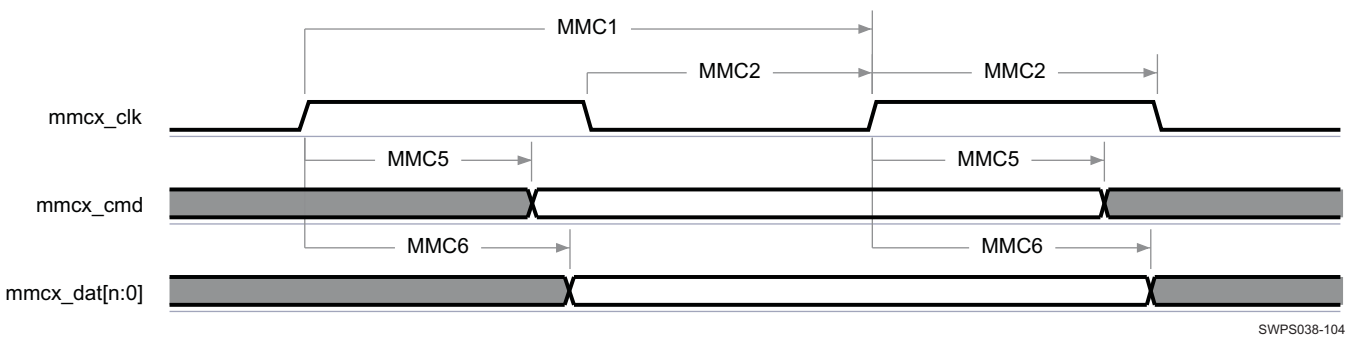

Figure 6-77. MMC2 and MMC3 Interfaces—High-Speed JC64 Transmiter Mode[1][2][3]

(1) In mmx_dat[n:0], x is equal to 2 or 3 and n is equal to 7.
(2) In mmx_cmd, x is equal to 2 or 3.
(3) In mmx_clk, x is equal to 2 or 3.

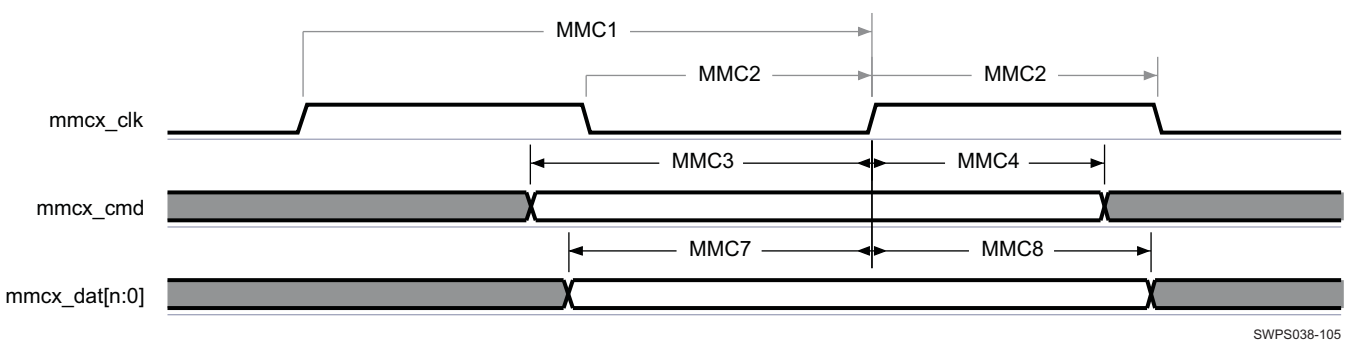

Figure 6-78. MMC2 and MMC3 Interfaces—High-Speed JC64 Receiver Mode[1][2][3]

(1) In mmx_dat[n:0], x is equal to 2 or 3 and n is equal to 7.
(2) In mmx_cmd, x is equal to 2 or 3.
(3) In mmx_clk, x is equal to 2 or 3.

6.6.9 Test Interfaces

6.6.9.1 Embedded Trace Macro Interface (ETM)

Table 6-137 assumes testing over the recommended operating conditions and electrical characteristic conditions below (see Figure 6-79).

Table 6-136. ETM Timing Conditions—Transmit Mode

TIMING CONDITION PARAMETER		VALUE		UNIT
		MIN	MAX	
Output Condition				
C_{LOAD}	Output load capacitance[1]		10	pF

(1) Buffer strength configuration: LB0 = 1.

Table 6-137. ETM Switching Characteristics—Transmit Mode[4]

NO.	PARAMETER		OPP100		OPP50		UNIT
			MIN	MAX	MIN	MAX	
TPIU1	$1 / t_{c(clk)}$	Frequency[3], output clock etk_clk		166		166	MHz
TPIU2	$t_{w(clkH)}$	Pulse duration, output clock etk_clk high	0.5P[1]		0.5P[1]		ns
TPIU3	$t_{w(clkL)}$	Pulse duration, output clock etk_clk low	0.5P[1]		0.5P[1]		ns
	$t_{dc(clk)}$	Duty cycle error, output clock etk_clk	–301	301	–301	301	ps
	$t_{J(clk)}$	Jitter standard deviation[2], output clock etk_clk		65		65	ps
	$t_{R(clk)}$	Rise time, output clock etk_clk		1.2		1.2	ns
	$t_{F(clk)}$	Fall time, output clock etk_clk		1.2		1.2	ns
TPIU4	$t_{d(clk-ctl)}$	Delay time, output clock etk_clk low/high to output control etk_ctl transition		0.839		0.839	ns
TPIU5	$t_{d(clkH-d)}$	Delay time, output clock etk_clk low/high to output data etk_d[15:0] transition		0.839		0.839	ns
	$t_{R(d/ctl)}$	Rise time, output data etk_d[15:0] and output control etk_ctl		1.2		1.2	ns
	$t_{F(d/ctl)}$	Fall time, output data etk_d[15:0] and output control etk_ctl		1.2		1.2	ns

(1) P = etk_clk period in ns

(2) The jitter probability density can be approximated by a Gaussian function.

(3) Related with the etm_clk maximum frequency.

(4) See Section 4.3.4, *Processor Clocks*.

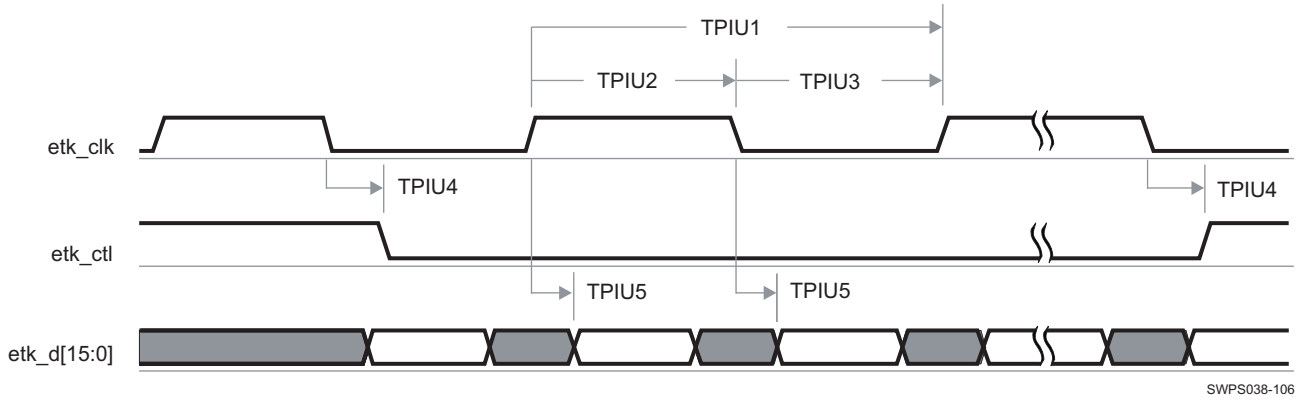

Figure 6-79. ETM—Transmit Mode

Copyright © 2010–2011, Texas Instruments Incorporated

6.6.9.2 System Debug Trace Interface (SDTI)

The System Debug Trace Interface (SDTI) module provides real-time software tracing functionality to the device. The trace interface has four trace data pins and a trace clock pin.

This interface is a dual-edge interface:

- The data are available on rising and falling edge of sdti_clk.
- But can be also configured in single-edge mode where data are available on the falling edge of sdti_clk.

Serial interface operates in clock stop regime: serial clock is not free-running; when there is no trace data, there is no trace clock.

6.6.9.2.1 SDTI—Dual-Edge Mode

Table 6-139 assumes testing over the recommended operating conditions and electrical characteristic conditions below (see Figure 6-80).

Table 6-138. SDTI Timing Conditions—Dual-Edge Mode

TIMING CONDITION PARAMETER		VALUE	UNIT
Output Condition			
C_{LOAD}	Output load capacitance[(1)]	25	pF

(1) Buffer strength configuration: LB0 = 1.

Table 6-139. SDTI Switching Characteristics—Dual-Edge Mode[(2)]

NO.	PARAMETER			OPP100		OPP50		UNIT
				MIN	MAX	MIN	MAX	
SD1	$1 / t_{c(clk)}$	Frequency, output clock sdti_clk			34.5		34.5	MHz
SD2	$t_{w(clk)}$	Pulse duration, output clock sdti_clk high or low		0.5P[(1)] – 1.2	0.5P[(1)] + 1.2	0.5P[(1)] – 1.2	0.5P[(1)] + 1.2	ns
SD3	$t_{d(clk-txd)}$	Delay time, output clock sdti_clk transition to output data sdti_txd[3:0] transition	Multiplexing mode on etk pins	2.3	10.9	2.3	10.9	ns
			Multiplexing mode on jtag_emu pins	2.3	13.9	2.3	13.9	

(1) P = sdti_clk clock period in ns

(2) See Section 4.3.4, *Processor Clocks*.

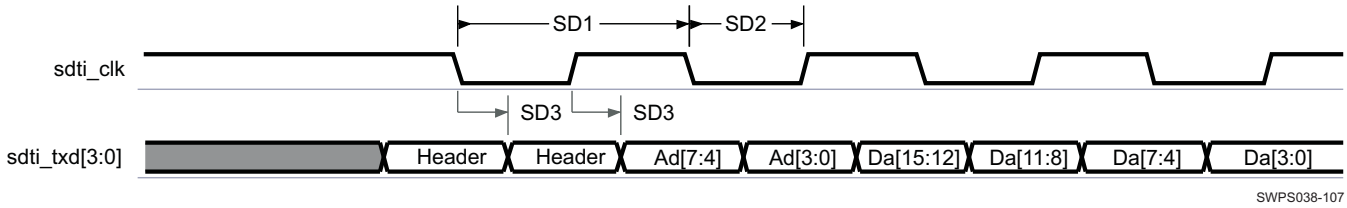

Figure 6-80. SDTI—Dual-Edge Mode

6.6.9.2.2 SDTI—Single-Edge Mode

Table 6-141 assumes testing over the recommended operating conditions and electrical characteristic conditions below (see Figure 6-81).

Table 6-140. SDTI Timing Conditions—Single-Edge Mode

TIMING CONDITION PARAMETER		VALUE	UNIT
Output Condition			
C_{LOAD}	Output load capacitance[(1)]	25	pF

(1) Buffer strength configuration: LB0 = 1.

Table 6-141. SDTI Switching Characteristics—Single-Edge Mode[(2)]

NO.	PARAMETER			OPP100		OPP50		UNIT
				MIN	MAX	MIN	MAX	
SD1	$1 / t_{c(clk)}$	Frequency, output clock sdti_clk			34.5		34.5	MHz
SD2	$t_{w(clk)}$	Pulse duration, output clock sdti_clk high or low		0.5P[(1)] – 1.2	0.5P[(1)] + 1.2	0.5P[(1)] – 1.2	0.5P[(1)] + 1.2	ns
SD3	$t_{d(clk-txd)}$	Delay time, output clock sdti_clk transition to output data sdti_txd[3:0] transition	Multiplexing mode on etk pins	2.3	26.5	2.3	26.5	ns
			Multiplexing mode on jtag_emu pins	2.3	33.2	2.3	33.2	

(1) P = sdti_clk clock period in ns

(2) See Section 4.3.4, *Processor Clocks*.

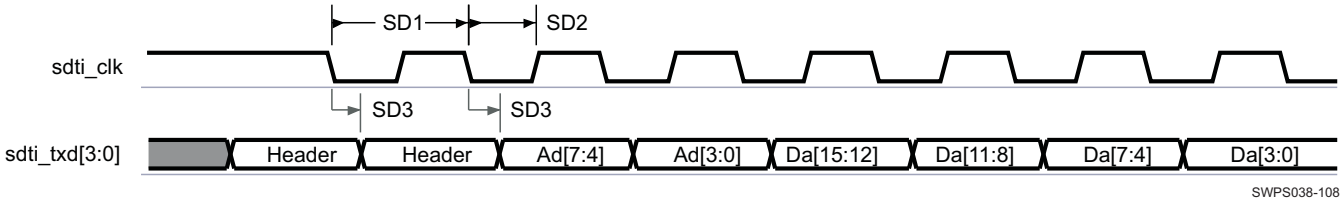

Figure 6-81. SDTI—Single-Edge Mode

6.6.9.3 JTAG Interface (JTAG)

The JTAG TAP controller handles standard IEEE JTAG interfaces. The following section defines the timing requirements for several tools used to test the device as:

- Free-running clock tool, like XDS560 and XDS510 tools
- Adaptive clock tool, like RealView® ICE tool and Lauterbach™ tool

6.6.9.3.1 JTAG—Free-Running Clock Mode

Table 6-143 and Table 6-144 assume testing over the recommended operating conditions and electrical characteristic conditions below (see Figure 6-82).

Table 6-142. JTAG Timing Conditions—Free-Running Clock Mode

TIMING CONDITION PARAMETER		VALUE	UNIT
Input Conditions			
t_R	Input signal rise time	5	ns
t_F	Input signal fall time	5	ns
Output Condition			
C_{LOAD}	Output load capacitance	30	pF

Copyright © 2010–2011, Texas Instruments Incorporated

Table 6-143. JTAG Timing Requirements—Free-Running Clock Mode[5] [6]

NO.	PARAMETER		OPP100		OPP50		UNIT
			MIN	MAX	MIN	MAX	
JT4	$1 / t_{c(tck)}$	Frequency[1], input clock jtag_tck		50		50	MHz
JT5	$t_{w(tckL)}$	Pulse duration, input clock jtag_tck low	0.5P[2]		0.5P[2]		ns
JT6	$t_{w(tckH)}$	Pulse duration, input clock jtag_tck high	0.5P[2]		0.5P[2]		ns
	$t_{dc(tck)}$	Duty cycle error, input clock jtag_tck	–1250	1250	–1667	1667	ps
	$t_{J(tck)}$	Cycle jitter[3], input clock jtag_tck	–1250	1250	–1667	1667	ps
JT7	$t_{su(tdiV-rtckH)}$	Setup time, input data jtag_tdi valid before output clock jtag_rtck high	1.6		1.6		ns
JT8	$t_{h(tdiV-rtckH)}$	Hold time, input data jtag_tdi valid after output clock jtag_rtck high	0.7		1.0		ns
JT9	$t_{su(tmsV-rtckH)}$	Setup time, input mode select jtag_tms_tmsc valid before output clock jtag_rtck high	1.6		1.6		ns
JT10	$t_{h(tmsV-rtckH)}$	Hold time, input mode select jtag_tms_tmsc valid after output clock jtag_rtck high	0.7		1.0		ns
JT12	$t_{su(emuxV-rtckH)}$	Setup time, input emulation jtag_emux[4] valid before output clock jtag_rtck high	14.4		19.6		ns
JT13	$t_{h(emuxV-rtckH)}$	Hold time, input emulation jtag_emux[4] valid after output clock jtag_rtck high	2.0		2.7		ns

(1) Related with the input maximum frequency supported by the JTAG module.
(2) P = input clock jtag _tck period in ns
(3) Maximum cycle jitter supported by input clock jtag _tck.
(4) In jtag_emux, x is equal to 0 or 1.
(5) The timing requirements are assured for the cycle jitter and duty cycle error conditions specified.
(6) See Section 4.3.4, *Processor Clocks*.

Table 6-144. JTAG Switching Characteristics—Free-Running Clock Mode[5]

NO.	PARAMETER		OPP100		OPP50		UNIT
			MIN	MAX	MIN	MAX	
JT1	$1 / t_{c(rtck)}$	Frequency[1], output clock jtag_rtck		50		50	MHz
JT2	$t_{w(rtckL)}$	Pulse duration, output clock jtag_rtck low	0.5P[2]		0.5P[2]		ns
JT3	$t_{w(rtckH)}$	Pulse duration, output clock jtag_rtck high	0.5P[2]		0.5P[2]		ns
	$t_{dc(rtck)}$	Duty cycle error, output clock jtag_rtck	–1250	1250	–1667	1667	ps
	$t_{J(rtck)}$	Jitter standard deviation[3], output clock jtag_rtck		33.3		33.3	ps
	$t_{R(rtck)}$	Rise time, output clock jtag_rtck		0		0	ns
	$t_{F(rtck)}$	Fall time, output clock jtag_rtck		0		0	ns
JT11	$t_{d(rtckL-tdoV)}$	Delay time, output clock jtag_rtck low to output data jtag_tdo valid	–5.8	5.8	–7.9	7.9	ns
	$t_{R(tdo)}$	Rise time, output data jtag_tdo		0		0	ns
	$t_{F(tdo)}$	Fall time, output data jtag_tdo		0		0	ns
JT14	$t_{d(rtckH-emuxV)}$	Delay time, output clock jtag_rtck high to output emulation ,jtag_emux[4] valid	2.7	15.1	2.7	20.4	ns

(1) Related with the jtag_rtck maximum frequency.
(2) P = output clock jtag _rtck period in ns
(3) The jitter probability density can be approximated by a Gaussian function.
(4) In jtag_emux, x is equal to 0 or 1.
(5) See Section 4.3.4, *Processor Clocks*.

Copyright © 2010–2011, Texas Instruments Incorporated

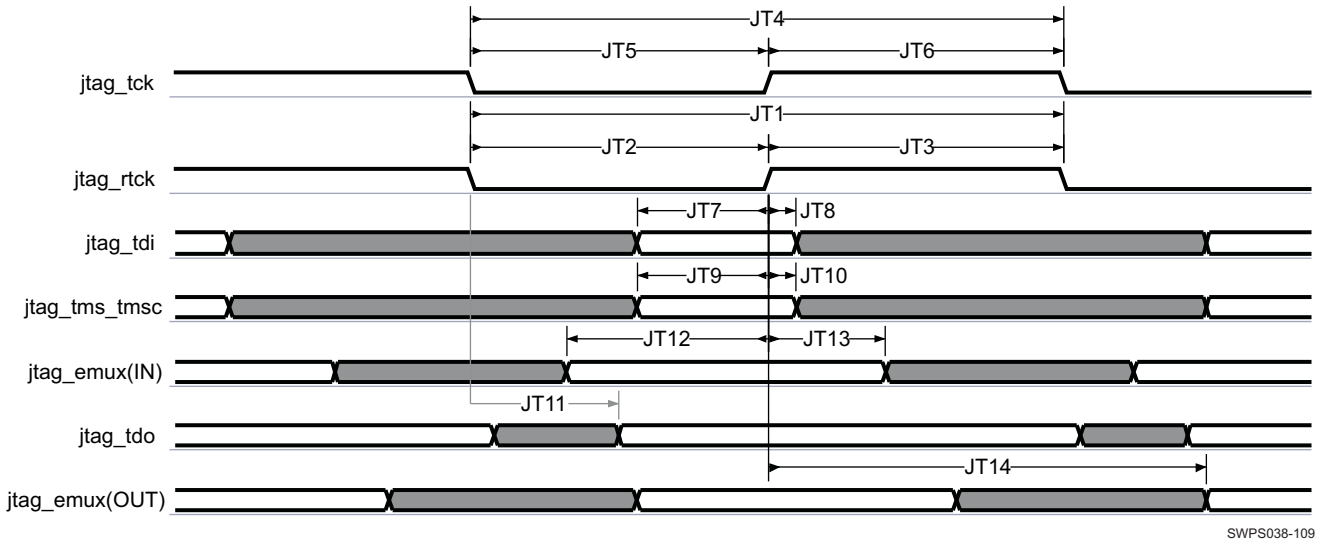

(1) In jtag_emux, x is equal to 0 or 1.

Figure 6-82. JTAG—Free-Running Clock Mode

6.6.9.3.2 JTAG—Adaptative Clock Mode

Table 6-146 and Table 6-147 assume testing over the recommended operating conditions and electrical characteristic conditions below (see Figure 6-83).

Table 6-145. JTAG Timing Conditions—Adaptative Clock Mode

TIMING CONDITION PARAMETER		VALUE	UNIT
Input Conditions			
t_R	Input signal rise time	5	ns
t_F	Input signal fall time	5	ns
Output Condition			
C_{LOAD}	Output load capacitance	30	pF

Table 6-146. JTAG Timing Requirements—Adaptative Clock Mode(4) (5)

NO.	PARAMETER		OPP100		OPP50		UNIT
			MIN	MAX	MIN	MAX	
JA4	$1 / t_{c(tck)}$	Frequency(1), input clock jtag_tck		50		50	MHz
JA5	$t_{w(tckL)}$	Pulse duration, input clock jtag_tck low	0.5P(2)		0.5P(2)		ns
JA6	$t_{w(tckH)}$	Pulse duration, input clock jtag_tck high	0.5P(2)		0.5P(2)		ns
	$t_{dc(lclk)}$	Duty cycle error, input clock jtag_tck	–2500	2500	–2500	2500	ps
	$t_{J(lclk)}$	Cycle jitter(3), input clock jtag_tck	–1500	1500	–1500	1500	ps
JA7	$t_{su(tdiV-tckH)}$	Setup time, input data jtag_tdi valid before input clock jtag_tck high	13.8		13.8		ns
JA8	$t_{h(tdiV-tckH)}$	Hold time, input data jtag_tdi valid after input clock jtag_tck high	13.8		13.8		ns
JA9	$t_{su(tmsV-tckH)}$	Setup time, input mode select jtag_tms_tmsc valid before input clock jtag_tck high	13.8		13.8		ns
JA10	$t_{h(tmsV-tckH)}$	Hold time, input mode select jtag_tms_tmsc valid after input clock jtag_tck high	13.8		13.8		ns

Copyright © 2010–2011, Texas Instruments Incorporated

(1) Related with the input maximum frequency supported by the JTAG module
(2) P = input clock jtag _tck period in ns
(3) Maximum cycle jitter supported by input clock jtag _tck.
(4) The timing requirements are assured for the cycle jitter and duty cycle error conditions specified.
(5) See Section 4.3.4, *Processor Clocks*.

Table 6-147. JTAG Switching Characteristics—Adaptative Clock Mode[(4)]

NO.	PARAMETER		OPP100		OPP50		UNIT
			MIN	MAX	MIN	MAX	
JA1	$1 / t_{c(rtck)}$	Frequency[(1)], output clock jtag_rtck		50		50	MHz
JA2	$t_{w(rtckL)}$	Pulse duration, output clock jtag_rtck low	0.5P[(2)]		0.5P[(2)]		ns
JA3	$t_{w(rtckH)}$	Pulse duration, output clock jtag_rtck high	0.5P[(2)]		0.5P[(2)]		ns
	$t_{dc(rtck)}$	Duty cycle error, output clock jtag_rtck	–2500	2500	–2500	2500	ps
	$t_{J(rtck)}$	Jitter standard deviation[(3)], output clock jtag_rtck		33.3		33.3	ps
	$t_{R(rtck)}$	Rise time, output clock jtag_rtck		0		0	ns
	$t_{F(rtck)}$	Fall time, output clock jtag_rtck		0		0	ns
JA11	$t_{d(rtckL-tdoV)}$	Delay time, output clock jtag_rtck low to output data jtag_tdo valid	–14.6	14.6	–14.6	14.6	ns

(1) Related to the jtag _rtck maximum frequency programmable.
(2) P = output clock jtag _rtck period in ns
(3) The jitter probability density can be approximated by a Gaussian function.
(4) See Section 4.3.4, *Processor Clocks*.

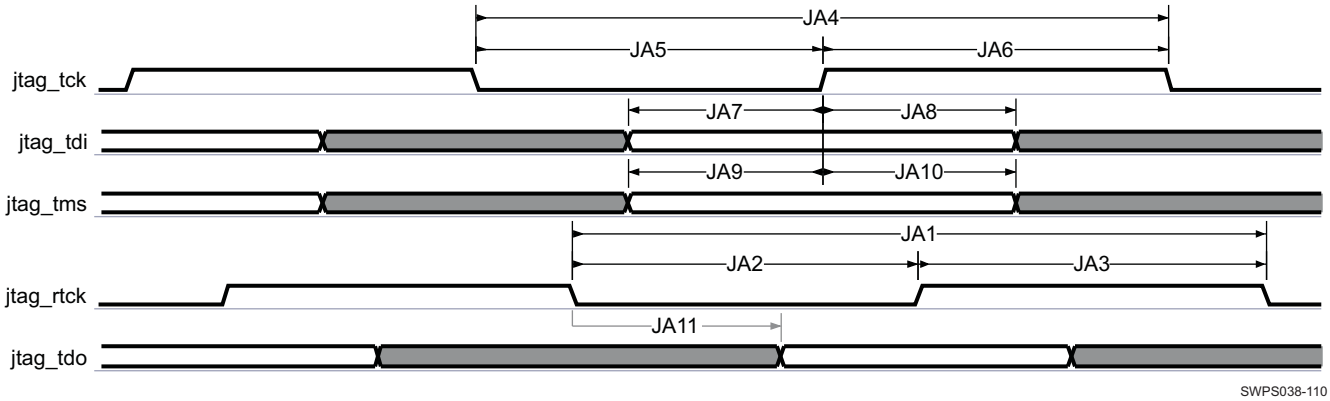

Figure 6-83. JTAG—Adaptative Clock Mode

7 Package Characteristics

7.1 Package Thermal Characteristics

Table 7-1 and Table 7-2 provide the thermal resistance characteristics for the packages used on this device.

Note: This table provides simulation data and may not represent actual use-case values.

Table 7-1. Thermal Resistance Characteristics 800MHz ARM Operation-4Gb DDR + Flash

PACKAGE	Power (W)(5)	θ_{JA}(°C/W)(2)	θ_{JB}(°C/W)(3)	θ_{JC}(°C/W)(4)	BOARD TYPE
CBP Package	1.42	20.06	6.44	(6)	2S2P(1)
CBC Package	1.42	19.97	7.76	(6)	2S2P(1)
CUS Package	1.05	24.75	11.06	7.06	2S2P(1)

(1) The board types are defined by JEDEC (reference JEDEC standard JESD51-9, Test Board for Array Surface Mount Package Thermal Measurements).

(2) θ_{JA} (Theta-JA) = Thermal Resistance Junction-to-Ambient, °C/W

(3) θ_{JB} (Theta-JB) = Thermal Resistance Junction-to-Board, °C/W

(4) θ_{JC} (Theta-JC) = Thermal Resistance Junction-to-Board, °C/W

(5) These power numbers are based on simulation results for DM37x. Power numbers for CBP and CBC packages include the DM37x device and POP memory. CUS package is DM37x only.

(6) Not applicable since these packages have memory package mounted on top.

Table 7-2. Thermal Resistance Characteristics 1GHz ARM Operation-8Gb DDR

PACKAGE	Power (W)(5)	θ_{JA}(°C/W)(2)	θ_{JB}(°C/W)(3)	θ_{JC}(°C/W)(4)	BOARD TYPE
CBP Package	2.06	19.51	6.19	(6)	2S2P(1)
CBC Package	2.06	20.11	8.01	(6)	2S2P(1)
CUS Package	1.4	24.75	11.06	7.06	2S2P(1)

(1) The board types are defined by JEDEC (reference JEDEC standard JESD51-9, Test Board for Array Surface Mount Package Thermal Measurements).

(2) θ_{JA} (Theta-JA) = Thermal Resistance Junction-to-Ambient, °C/W

(3) θ_{JB} (Theta-JB) = Thermal Resistance Junction-to-Board, °C/W

(4) θ_{JC} (Theta-JC) = Thermal Resistance Junction-to-Board, °C/W

(5) These power numbers are based on simulation results for DM37x. Power numbers for CBP and CBC packages include the DM37x device and POP memory. CUS package is DM37x only.

(6) Not applicable since these packages have memory package mounted on top.

7.2 Device Support

7.2.1 Device and Development-Support Tool Nomenclature

To designate the stages in the product development cycle, TI assigns prefixes to the part numbers of all DM37x processors and support tools. Each device has one of three prefixes: X, P, or null (no prefix). Texas Instruments recommends two of three possible prefix designators for its support tools: TMDX and TMDS. These prefixes represent evolutionary stages of product development from engineering prototypes (TMDX) through fully qualified production devices/tools (TMDS).

Device development evolutionary flow:

X Experimental device that is not necessarily representative of the final devices electrical specifications and may not use production assembly flow. (TMX definition)

P Prototype device that is not necessarily the final silicon die and may not necessarily meet final electrical specifications. (TMP definition)

null Production version of the silicon die that is fully qualified. (TMS definition)

Copyright © 2010–2011, Texas Instruments Incorporated

Support tool development evolutionary flow:

TMDX Development support product that has not yet completed Texas Instruments internal qualification testing.

TMDS Fully qualified development support product.

TMX and TMP devices and TMDX development-support tools are shipped against the following disclaimer:

Developmental product is intended for internal evaluation purposes.

Production devices and TMDS development-support tools have been characterized fully, and the quality and reliability of the device have been demonstrated fully. TIs standard warranty applies.

Predictions show that prototype devices (X or P), have a greater failure rate than the standard production devices. Texas Instruments recommends that these devices not be used in any production system because their expected end-use failure rate still is undefined. Only qualified production devices are to be used.

For additional description of the device nomenclature markings, see the *Processor Silicon Errata*.

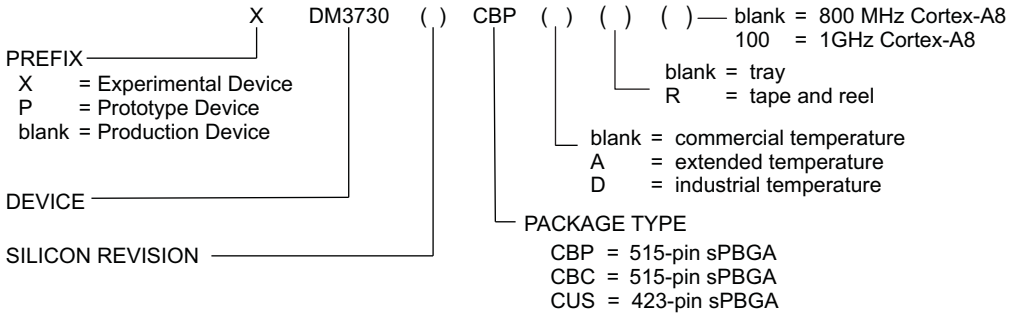

Figure 7-1. Device Nomenclature

7.2.2 Documentation Support

7.2.2.1 Related Documentation from Texas Instruments

The following documents describe the DM3730/25 Digital Media Processor. Copies of these documents are available on the Internet at www.ti.com. Tip: Enter the literature number in the search box provided at www.ti.com.

The current documentation that describes the DM3730/25 Digital Media Processor, related peripherals, and other technical collateral, is available in the product folder at: www.ti.com.

SPRUGN4 . Collection of documents providing detailed information on the Sitara™ architecture including power, reset, and clock control, interrupts, memory map, and switch fabric interconnect. Detailed information on the microprocessor unit (MPU) subsystem as well a functional description of the peripherals supported on DM3730/25devices is also included.

7.2.2.1.1 Community Resources

The following links connect to TI community resources. Linked contents are provided "AS IS" by the respective contributors. They do not constitute TI specifications and do not necessarily reflect TI's views; see TI's Terms of Use.

TI E2E Community ***TI's Engineer-to-Engineer (E2E) Community.*** Created to foster collaboration among engineers. At e2e.ti.com, you can ask questions, share knowledge, explore ideas and help solve problems with fellow engineers.

TI Embedded Processors Wiki ***Texas Instruments Embedded Processors Wiki.*** Established to help developers get started with Embedded Processors from Texas Instruments and to foster innovation and growth of general knowledge about the hardware and software surrounding these devices.

7.2.2.2 Related Documentation from Other Sources

The following documents are related to the DM3730, DM3725 Digital Media Processors. Copies of these documents can be obtained directly from the internet or from your Texas Instruments representative.

Cortex-A8 Technical Reference Manual. This is the technical reference manual for the Cortex-A8 processor. A copy of this document can be obtained via the internet at http://infocenter.arm.com. Please see the *DM3730, DM3725 Digital Media Processors Silicon Errata* (literature number SPRZ319) to determine the revision of the Cortex-A8 core used on your device.

ARM Core Cortex™-A8 (AT400/AT401) Errata Notice. Provides a list of advisories for the different revisions of the Cortex-A8 processor. Contact your TI representative for a copy of this document. Please see the *DM3730, DM3725 Digital Media Processors Silicon Errata* (literature number SPRZ319) to determine the revision of the Cortex-A8 core used on your device.

Copyright © 2010–2011, Texas Instruments Incorporated

7.3 Mechanical Data

PACKAGING INFORMATION

Orderable Device	Status (1)	Package Type	Package Drawing	Pins	Package Qty	Eco Plan (2)	Lead/Ball Finish	MSL Peak Temp (3)	Op Temp (°C)	Top-Side Markings (4)	Samples
DM3725CBC	ACTIVE	POP-FCBGA	CBC	515	1	Green (RoHS & no Sb/Br)	Call TI	Level-3-260C-168 HR	0 to 90	DM3725CBC	Samples
DM3725CBC100	ACTIVE	POP-FCBGA	CBC	515	119	Green (RoHS & no Sb/Br)	Call TI	Level-3-260C-168 HR	0 to 90	DM3725CBC100	Samples
DM3725CBCA	ACTIVE	POP-FCBGA	CBC	515	119	Green (RoHS & no Sb/Br)	SNAGCU	Level-3-260C-168 HR	-40 to 105	DM3725CBCA	Samples
DM3725CBCD100	ACTIVE	POP-FCBGA	CBC	515		TBD	Call TI	Call TI	-40 to 90	DM3725CBCD100	Samples
DM3725CBP	ACTIVE	POP-FCBGA	CBP	515	168	Green (RoHS & no Sb/Br)	Call TI	Level-3-260C-168 HR	0 to 90	DM3725CBP DM3725CBP-AS3	Samples
DM3725CBP100	ACTIVE	POP-FCBGA	CBP	515	168	Green (RoHS & no Sb/Br)	Call TI	Level-3-260C-168 HR	0 to 90	DM3725CBP100 DM3725CBP100-AS3	Samples
DM3725CBPA	ACTIVE	POP-FCBGA	CBP	515	168	Green (RoHS & no Sb/Br)	SNAGCU	Level-3-260C-168 HR	-40 to 105	DM3725CBPA	Samples
DM3725CBPD100	ACTIVE	POP-FCBGA	CBP	515	168	Green (RoHS & no Sb/Br)	Call TI	Level-3-260C-168 HR	-40 to 90	DM3725CBPD100 DM3725CBPD100-AS3	Samples
DM3725CUS	ACTIVE	FCBGA	CUS	423	90	Green (RoHS & no Sb/Br)	Call TI	Level-3-260C-168 HR	0 to 90	DM3725CUS	Samples
DM3725CUS100	ACTIVE	FCBGA	CUS	423	90	Green (RoHS & no Sb/Br)	Call TI	Level-3-260C-168 HR	0 to 90	DM3725CUS100	Samples
DM3725CUSA	ACTIVE	FCBGA	CUS	423	90	Green (RoHS & no Sb/Br)	SNAGCU	Level-3-260C-168 HR	-40 to 105	DM3725CUSA	Samples
DM3725CUSD100	ACTIVE	FCBGA	CUS	423	90	Green (RoHS & no Sb/Br)	Call TI	Level-3-260C-168 HR	-40 to 90	DM3725CUSD100	Samples
DM3730CBC	ACTIVE	POP-FCBGA	CBC	515	119	Green (RoHS & no Sb/Br)	Call TI	Level-3-260C-168 HR	0 to 90	DM3730CBC	Samples
DM3730CBC100	ACTIVE	POP-FCBGA	CBC	515	119	Green (RoHS & no Sb/Br)	Call TI	Level-3-260C-168 HR	0 to 90	DM3730CBC100	Samples
DM3730CBCA	ACTIVE	POP-FCBGA	CBC	515	119	Green (RoHS & no Sb/Br)	SNAGCU	Level-3-260C-168 HR	-40 to 105	DM3730CBCA	Samples
DM3730CBCD100	ACTIVE	POP-FCBGA	CBC	515	119	Green (RoHS & no Sb/Br)	Call TI	Level-3-260C-168 HR	-40 to 90	DM3730CBCD100	Samples
DM3730CBP	ACTIVE	POP-FCBGA	CBP	515	168	Green (RoHS & no Sb/Br)	Call TI	Level-3-260C-168 HR	0 to 90	DM3730CBP DM3730CBP-AS3	Samples

Orderable Device	Status (1)	Package Type	Package Drawing	Pins	Package Qty	Eco Plan (2)	Lead/Ball Finish	MSL Peak Temp (3)	Op Temp (°C)	Top-Side Markings (4)	Samples
DM3730CBP100	ACTIVE	POP-FCBGA	CBP	515	168	Green (RoHS & no Sb/Br)	Call TI	Level-3-260C-168 HR	0 to 90	DM3730CBP100 DM3730CBP100-AS3	Samples
DM3730CBPA	ACTIVE	POP-FCBGA	CBP	515	1	Green (RoHS & no Sb/Br)	SNAGCU	Level-3-260C-168 HR	-40 to 105	DM3730CBPA	Samples
DM3730CBPD100	ACTIVE	POP-FCBGA	CBP	515	168	Green (RoHS & no Sb/Br)	Call TI	Level-3-260C-168 HR	-40 to 90	DM3730CBPD100 DM3730CBPD100-AS3	Samples
DM3730CUS	ACTIVE	FCBGA	CUS	423	90	Green (RoHS & no Sb/Br)	Call TI	Level-3-260C-168 HR	0 to 90	DM3730CUS	Samples
DM3730CUS100	ACTIVE	FCBGA	CUS	423	90	Green (RoHS & no Sb/Br)	Call TI	Level-3-260C-168 HR	0 to 90	DM3730CUS100	Samples
DM3730CUSA	ACTIVE	FCBGA	CUS	423	90	Green (RoHS & no Sb/Br)	SNAGCU	Level-3-260C-168 HR	-40 to 105	DM3730CUSA	Samples
DM3730CUSD100	ACTIVE	FCBGA	CUS	423	90	Green (RoHS & no Sb/Br)	Call TI	Level-3-260C-168 HR	-40 to 90	DM3730CUSD100	Samples
XDM3730CBP	OBSOLETE	POP-FCBGA	CBP	515		TBD	Call TI	Call TI	0 to 90		

(1) The marketing status values are defined as follows:
ACTIVE: Product device recommended for new designs.
LIFEBUY: TI has announced that the device will be discontinued, and a lifetime-buy period is in effect.
NRND: Not recommended for new designs. Device is in production to support existing customers, but TI does not recommend using this part in a new design.
PREVIEW: Device has been announced but is not in production. Samples may or may not be available.
OBSOLETE: TI has discontinued the production of the device.

(2) Eco Plan - The planned eco-friendly classification: Pb-Free (RoHS), Pb-Free (RoHS Exempt), or Green (RoHS & no Sb/Br) - please check http://www.ti.com/productcontent for the latest availability information and additional product content details.
TBD: The Pb-Free/Green conversion plan has not been defined.
Pb-Free (RoHS): TI's terms "Lead-Free" or "Pb-Free" mean semiconductor products that are compatible with the current RoHS requirements for all 6 substances, including the requirement that lead not exceed 0.1% by weight in homogeneous materials. Where designed to be soldered at high temperatures, TI Pb-Free products are suitable for use in specified lead-free processes.
Pb-Free (RoHS Exempt): This component has a RoHS exemption for either 1) lead-based flip-chip solder bumps used between the die and package, or 2) lead-based die adhesive used between the die and leadframe. The component is otherwise considered Pb-Free (RoHS compatible) as defined above.
Green (RoHS & no Sb/Br): TI defines "Green" to mean Pb-Free (RoHS compatible), and free of Bromine (Br) and Antimony (Sb) based flame retardants (Br or Sb do not exceed 0.1% by weight in homogeneous material)

(3) MSL, Peak Temp. -- The Moisture Sensitivity Level rating according to the JEDEC industry standard classifications, and peak solder temperature.

(4) Only one of markings shown within the brackets will appear on the physical device.

Important Information and Disclaimer: The information provided on this page represents TI's knowledge and belief as of the date that it is provided. TI bases its knowledge and belief on information provided by third parties, and makes no representation or warranty as to the accuracy of such information. Efforts are underway to better integrate information from third parties. TI has taken and continues to take reasonable steps to provide representative and accurate information but may not have conducted destructive testing or chemical analysis on incoming materials and chemicals. TI and TI suppliers consider certain information to be proprietary, and thus CAS numbers and other limited information may not be available for release.

In no event shall TI's liability arising out of such information exceed the total purchase price of the TI part(s) at issue in this document sold by TI to Customer on an annual basis.

CUS (S–PBGA–N423) PLASTIC BALL GRID ARRAY

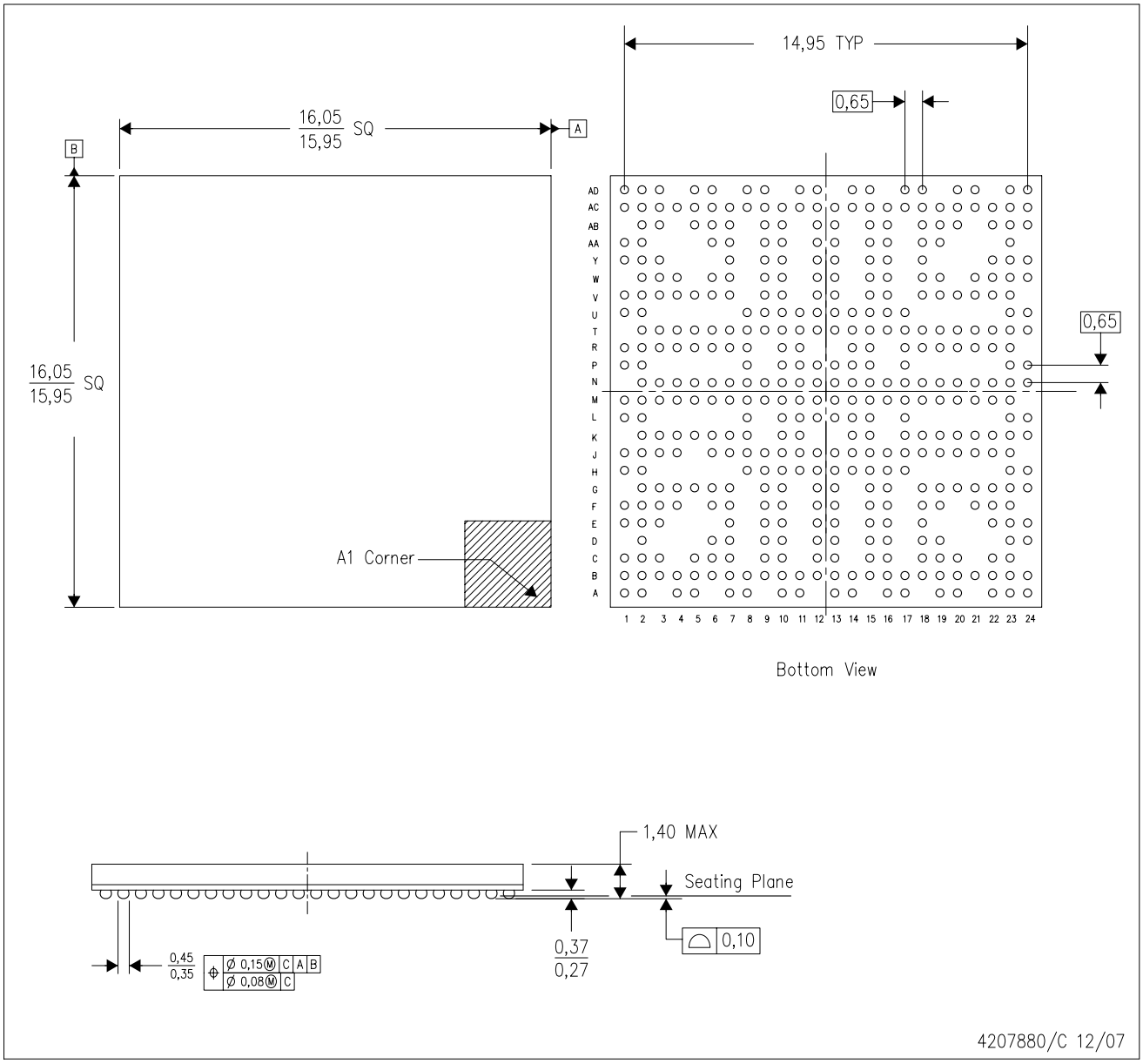

NOTES:
A. All linear dimensions are in millimeters.
B. This drawing is subject to change without notice.
C. Flip chip application only.
D. Lead–free die bump and solder ball.

CBC (S–PBGA–N515) PLASTIC BALL GRID ARRAY

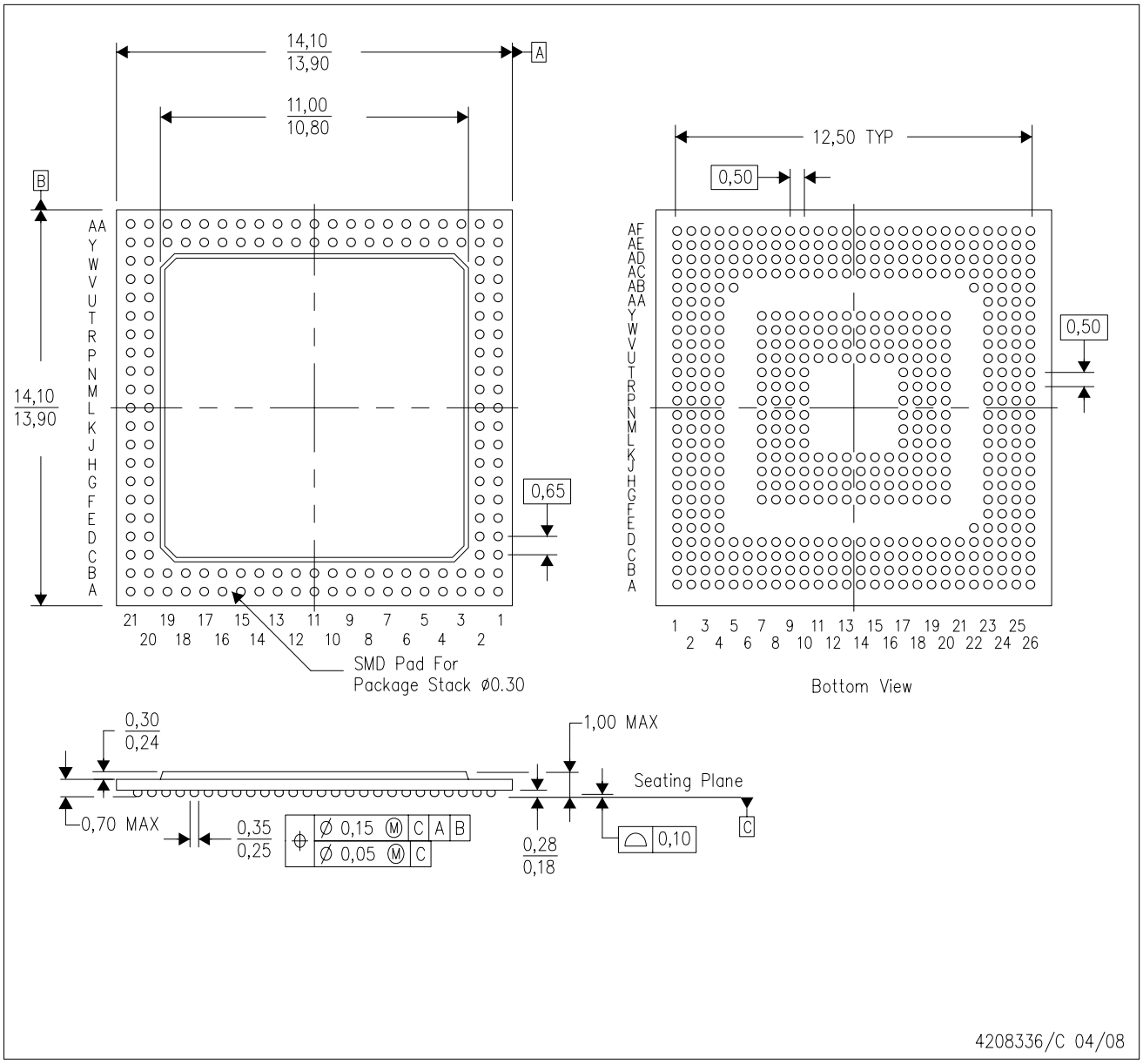

NOTES:
A. All linear dimensions are in millimeters.
B. This drawing is subject to change without notice.
C. Flip chip application only.
D. Lead–free die bump and solder ball.

CBP (S–PBGA–N515) PLASTIC BALL GRID ARRAY

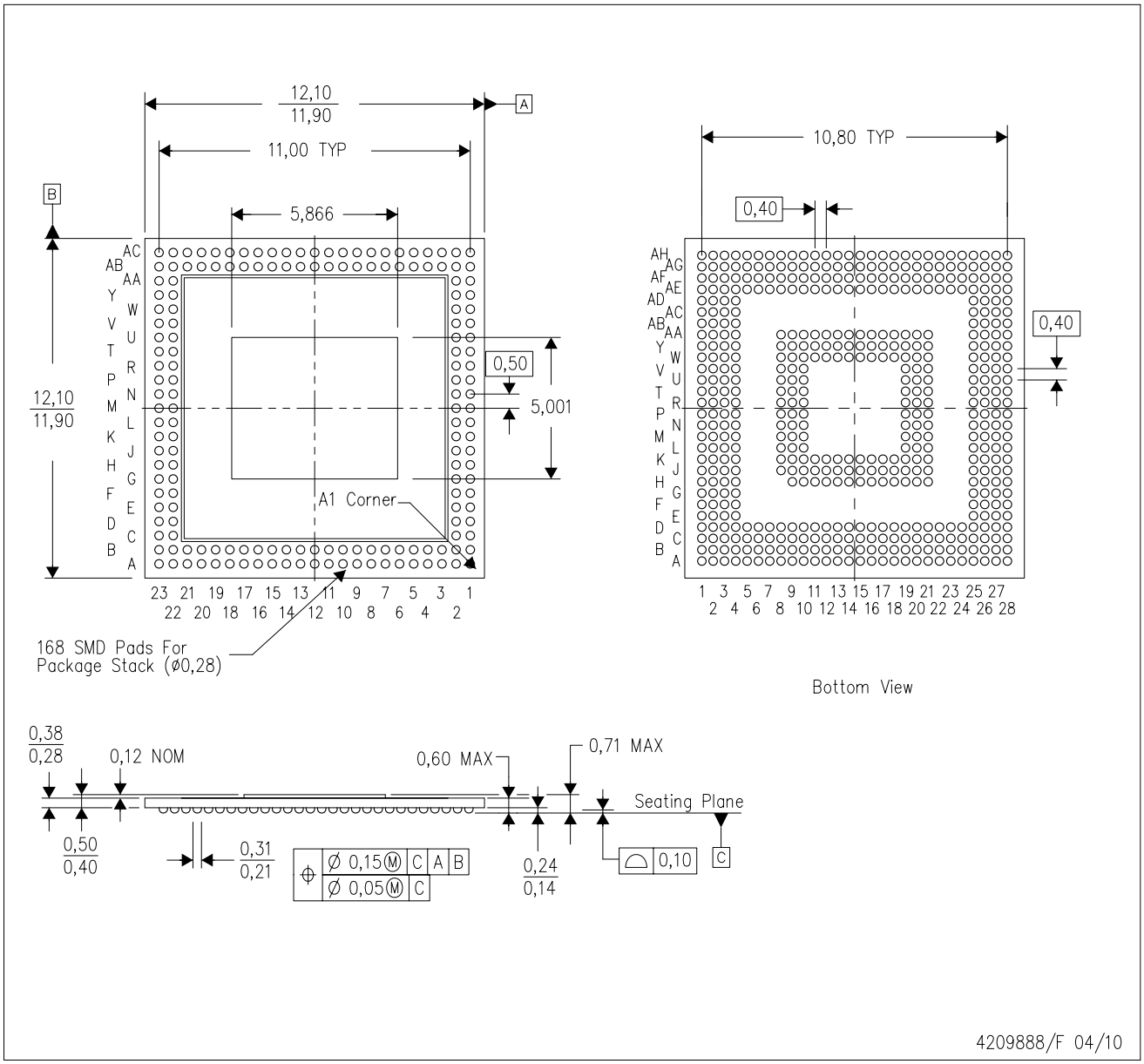

NOTES:
A. All linear dimensions are in millimeters. Dimensioning and tolerancing per ASME Y14.5M–1994.
B. This drawing is subject to change without notice.
C. Flip chip application only.
D. Pb–free die bump and solder ball.

IMPORTANT NOTICE

Texas Instruments Incorporated and its subsidiaries (TI) reserve the right to make corrections, enhancements, improvements and other changes to its semiconductor products and services per JESD46, latest issue, and to discontinue any product or service per JESD48, latest issue. Buyers should obtain the latest relevant information before placing orders and should verify that such information is current and complete. All semiconductor products (also referred to herein as “components”) are sold subject to TI’s terms and conditions of sale supplied at the time of order acknowledgment.

TI warrants performance of its components to the specifications applicable at the time of sale, in accordance with the warranty in TI’s terms and conditions of sale of semiconductor products. Testing and other quality control techniques are used to the extent TI deems necessary to support this warranty. Except where mandated by applicable law, testing of all parameters of each component is not necessarily performed.

TI assumes no liability for applications assistance or the design of Buyers’ products. Buyers are responsible for their products and applications using TI components. To minimize the risks associated with Buyers’ products and applications, Buyers should provide adequate design and operating safeguards.

TI does not warrant or represent that any license, either express or implied, is granted under any patent right, copyright, mask work right, or other intellectual property right relating to any combination, machine, or process in which TI components or services are used. Information published by TI regarding third-party products or services does not constitute a license to use such products or services or a warranty or endorsement thereof. Use of such information may require a license from a third party under the patents or other intellectual property of the third party, or a license from TI under the patents or other intellectual property of TI.

Reproduction of significant portions of TI information in TI data books or data sheets is permissible only if reproduction is without alteration and is accompanied by all associated warranties, conditions, limitations, and notices. TI is not responsible or liable for such altered documentation. Information of third parties may be subject to additional restrictions.

Resale of TI components or services with statements different from or beyond the parameters stated by TI for that component or service voids all express and any implied warranties for the associated TI component or service and is an unfair and deceptive business practice. TI is not responsible or liable for any such statements.

Buyer acknowledges and agrees that it is solely responsible for compliance with all legal, regulatory and safety-related requirements concerning its products, and any use of TI components in its applications, notwithstanding any applications-related information or support that may be provided by TI. Buyer represents and agrees that it has all the necessary expertise to create and implement safeguards which anticipate dangerous consequences of failures, monitor failures and their consequences, lessen the likelihood of failures that might cause harm and take appropriate remedial actions. Buyer will fully indemnify TI and its representatives against any damages arising out of the use of any TI components in safety-critical applications.

In some cases, TI components may be promoted specifically to facilitate safety-related applications. With such components, TI’s goal is to help enable customers to design and create their own end-product solutions that meet applicable functional safety standards and requirements. Nonetheless, such components are subject to these terms.

No TI components are authorized for use in FDA Class III (or similar life-critical medical equipment) unless authorized officers of the parties have executed a special agreement specifically governing such use.

Only those TI components which TI has specifically designated as military grade or “enhanced plastic” are designed and intended for use in military/aerospace applications or environments. Buyer acknowledges and agrees that any military or aerospace use of TI components which have ***not*** been so designated is solely at the Buyer's risk, and that Buyer is solely responsible for compliance with all legal and regulatory requirements in connection with such use.

TI has specifically designated certain components as meeting ISO/TS16949 requirements, mainly for automotive use. In any case of use of non-designated products, TI will not be responsible for any failure to meet ISO/TS16949.

Products		**Applications**	
Audio	www.ti.com/audio	Automotive and Transportation	www.ti.com/automotive
Amplifiers	amplifier.ti.com	Communications and Telecom	www.ti.com/communications
Data Converters	dataconverter.ti.com	Computers and Peripherals	www.ti.com/computers
DLP® Products	www.dlp.com	Consumer Electronics	www.ti.com/consumer-apps
DSP	dsp.ti.com	Energy and Lighting	www.ti.com/energy
Clocks and Timers	www.ti.com/clocks	Industrial	www.ti.com/industrial
Interface	interface.ti.com	Medical	www.ti.com/medical
Logic	logic.ti.com	Security	www.ti.com/security
Power Mgmt	power.ti.com	Space, Avionics and Defense	www.ti.com/space-avionics-defense
Microcontrollers	microcontroller.ti.com	Video and Imaging	www.ti.com/video
RFID	www.ti-rfid.com		
OMAP Applications Processors	www.ti.com/omap	**TI E2E Community**	e2e.ti.com
Wireless Connectivity	www.ti.com/wirelessconnectivity		

Mailing Address: Texas Instruments, Post Office Box 655303, Dallas, Texas 75265
Copyright © 2013, Texas Instruments Incorporated

Компания «ЭлектроПласт» предлагает заключение долгосрочных отношений при поставках импортных электронных компонентов на взаимовыгодных условиях!

Наши преимущества:

- Оперативные поставки широкого спектра электронных компонентов отечественного и импортного производства напрямую от производителей и с крупнейших мировых складов;
- Поставка более 17-ти миллионов наименований электронных компонентов;
- Поставка сложных, дефицитных, либо снятых с производства позиций;
- Оперативные сроки поставки под заказ (от 5 рабочих дней);
- Экспресс доставка в любую точку России;
- Техническая поддержка проекта, помощь в подборе аналогов, поставка прототипов;
- Система менеджмента качества сертифицирована по Международному стандарту ISO 9001;
- Лицензия ФСБ на осуществление работ с использованием сведений, составляющих государственную тайну;
- Поставка специализированных компонентов (Xilinx, Altera, Analog Devices, Intersil, Interpoint, Microsemi, Aeroflex, Peregrine, Syfer, Eurofarad, Texas Instrument, Miteq, Cobham, E2V, MA-COM, Hittite, Mini-Circuits,General Dynamics и др.);

Помимо этого, одним из направлений компании «ЭлектроПласт» является направление «Источники питания». Мы предлагаем Вам помощь Конструкторского отдела:

- Подбор оптимального решения, техническое обоснование при выборе компонента;
- Подбор аналогов;
- Консультации по применению компонента;
- Поставка образцов и прототипов;
- Техническая поддержка проекта;
- Защита от снятия компонента с производства.

Как с нами связаться

Телефон: 8 (812) 309 58 32 (многоканальный)
Факс: 8 (812) 320-02-42
Электронная почта: org@eplast1.ru
Адрес: 198099, г. Санкт-Петербург, ул. Калинина, дом 2, корпус 4, литера А.