One Technology Way • P.O. Box 9106 • Norwood, MA 02062-9106, U.S.A. • Tel: 781.329.4700 • Fax: 781.461.3113 • www.analog.com

Evaluation Board for Single, High Speed Op Amps Offered in 8-Lead SOIC Packages

FEATURES

Enables quick breadboarding/prototyping
User-defined circuit configuration
Edge-mounted SMA connector provisions
Easy connection to test equipment and other circuits
RoHS compliant

GENERAL DESCRIPTION

The Analog Devices, Inc., 8-lead SOIC evaluation board is designed to help users evaluate single, high speed op amps offered in 8-lead SOIC packages. The evaluation board is a bare board (that is, there are no components or amplifier soldered to the board, these must be ordered separately) that enables users to quickly prototype a variety of single op amp circuits, which minimizes risk and reduces time to market.

The evaluation board is a 2-layer printed circuit board (PCB) that accepts SMA edge-mounted connectors on the inputs and outputs for efficient connection to test equipment or other circuitry. The evaluation board is designed to work with almost any of the Analog Devices op amps offered in an 8-lead SOIC package. The evaluation board can accommodate amplifiers that feature a power-down or disable pin. The board can also be used with op amps that feature external frequency compensation capacitors, such as the AD8021AR.

Figure 1 shows the component side of the bare evaluation board, and Figure 2 shows the circuit side of the bare evaluation board.

The ground plane, component placement, and supply bypassing have been designed to provide maximum flexibility while minimizing parasitic inductances and capacitances. The components of the evaluation board are primarily SMT 1206 case size, with the exception of the electrolytic bypass capacitors (C1, C4), which are 3528 case size.

Figure 3 shows the evaluation board schematic. The assembly drawings are shown in Figure 4 and Figure 6. The recommended layout patterns for making connections to the op amp and supporting circuitry are shown in Figure 5 and Figure 7.

Two options for supply bypassing include the following:

1. Connect additional shunt capacitors (C2, C5) in parallel with the electrolytic capacitors (C1, C4) from each supply to ground. This technique of power supply bypassing provides wideband rejection of unwanted noise on the supply lines. It is implemented by placing a 0 Ω resistor in the C6 position and shunt capacitors in the C1, C2, C4, and C5 positions.
2. Connect a capacitor between the supply rails. This method uses fewer components and can improve the PSRR at higher frequencies but does not provide shunt bypassing to the negative supply rail. It is implemented by inserting a 0 Ω resistor in the C2 position, then inserting the bypass capacitor in the C5 position, and omitting C6. Optimal bypassing is circuit dependent and, therefore, must be evaluated by the designer for each application.

EVALUATION BOARD COMPONENT AND CIRCUIT SIDES

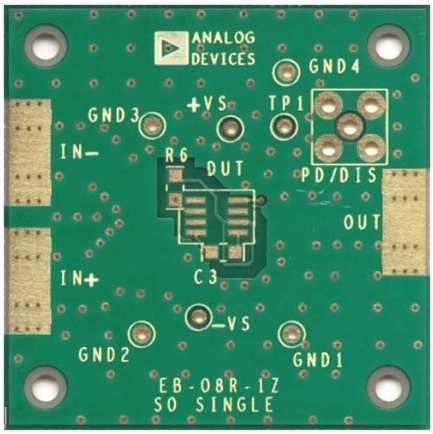

NOTES
1. THE EVALUATION BOARD SILKSCREEN PART NUMBER LABELING ON THE BOARD MAY BE DIFFERENT FROM WHAT IS SHOWN HERE.

08885-001

Figure 1. Component Side of Evaluation Board

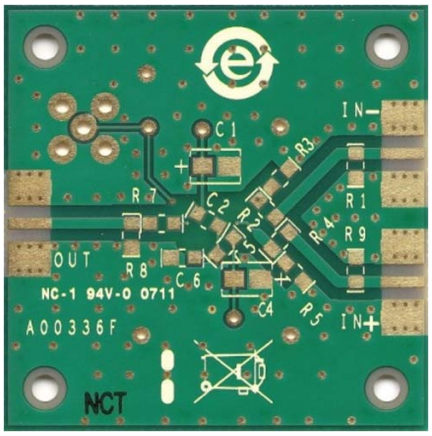

NOTES
1. THE EVALUATION BOARD SILKSCREEN PART NUMBER LABELING ON THE BOARD MAY BE DIFFERENT FROM WHAT IS SHOWN HERE.

08885-002

Figure 2. Circuit Side of Evaluation Board

PLEASE SEE THE LAST PAGE FOR AN IMPORTANT WARNING AND LEGAL TERMS AND CONDITIONS.

TABLE OF CONTENTS

Features 1
General Description 1
Evaluation Board Component and Circuit Sides 1
Revision History 2
Evaluation Board Schematic 3
Evaluation Board Assembly Drawings and Layout Patterns 4
Ordering Information 5
Bill of Materials.....5

REVISION HISTORY

4/11—Rev. 0 to Rev. A

Changes to Product Title, General Description Section, Figure 1, and Figure 2 1
Changed Evaluation Board Schematic, Assembly Drawings, and Layout Patterns Section to Evaluation Board Schematic Section 3
Added Evaluation Board Assembly Drawings and Layout Patterns Section 4
Changes to Figure 4 through Figure 7 4

3/10—Revision 0: Initial Version

EVALUATION BOARD SCHEMATIC

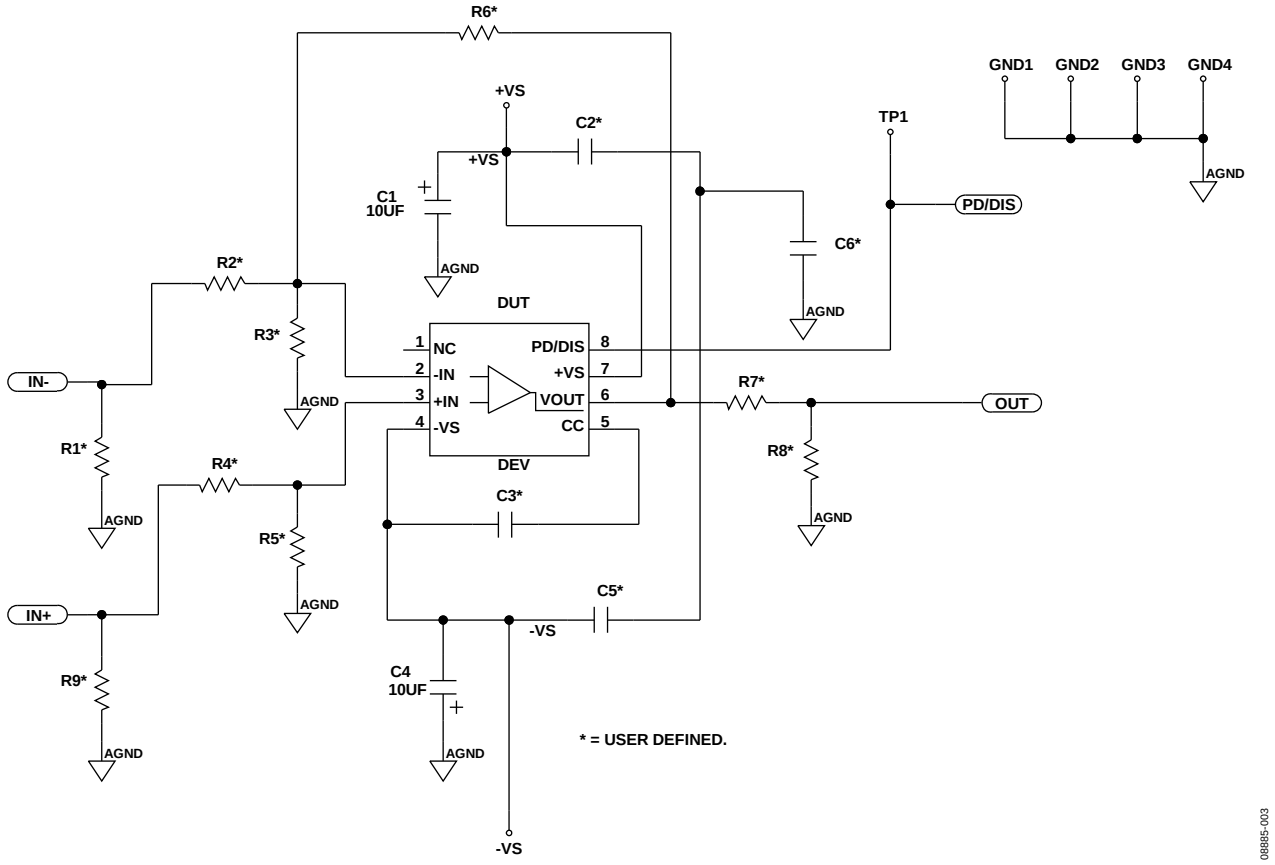

Figure 3. 8-Lead SOIC Evaluation Board Schematic

EVALUATION BOARD ASSEMBLY DRAWINGS AND LAYOUT PATTERNS

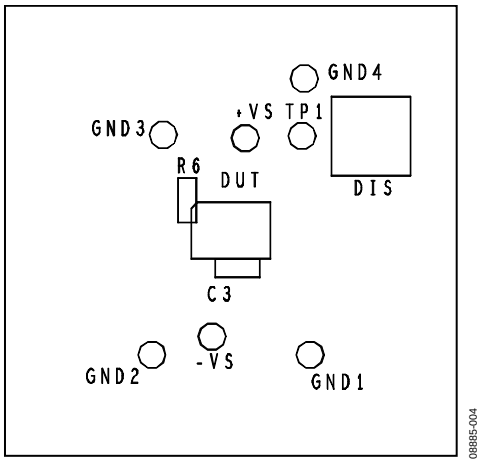

Figure 4. Component Side Assembly Drawing

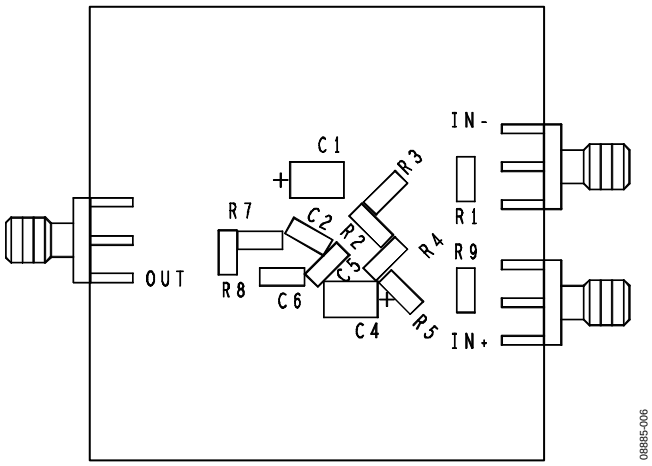

Figure 6. Circuit Side Assembly Drawing

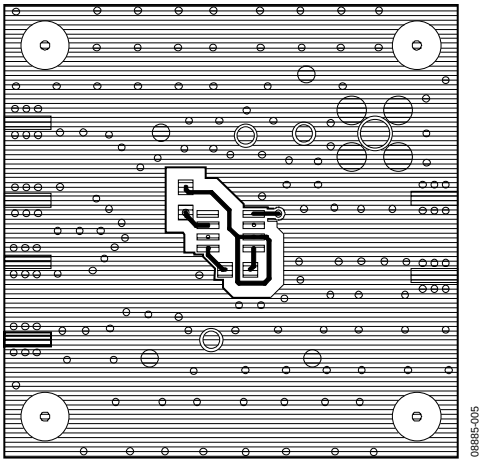

Figure 5. Component Side Layout Pattern

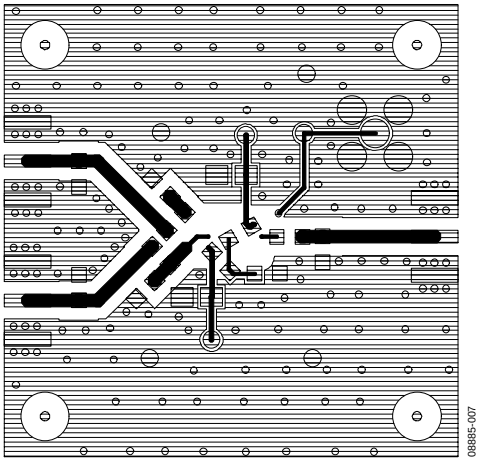

Figure 7. Circuit Side Layout Pattern

ORDERING INFORMATION

BILL OF MATERIALS

Table 1.

Quantity	Reference Designator	Description	Package
7	+VS, –VS, GND1, GND2, GND3, GND4, TP1	Test point	TP
2	C1, C4	10 µF capacitor	3528
4	C2, C3, C5, C6	Capacitor, user defined	C1206
1	DUT	DEV, SO8_SPEC	8-lead SOIC
4	PD/DIS, IN+, IN–, OUT	SMA/SMT	SMA/SMT
9	R1, R2, R3, R4, R5, R6, R7, R8, R9	Resistor, user defined	R1206

NOTES

NOTES

NOTES

ESD Caution

ESD (electrostatic discharge) sensitive device. Charged devices and circuit boards can discharge without detection. Although this product features patented or proprietary protection circuitry, damage may occur on devices subjected to high energy ESD. Therefore, proper ESD precautions should be taken to avoid performance degradation or loss of functionality.

Legal Terms and Conditions

By using the evaluation board discussed herein (together with any tools, components documentation or support materials, the "Evaluation Board"), you are agreeing to be bound by the terms and conditions set forth below ("Agreement") unless you have purchased the Evaluation Board, in which case the Analog Devices Standard Terms and Conditions of Sale shall govern. Do not use the Evaluation Board until you have read and agreed to the Agreement. Your use of the Evaluation Board shall signify your acceptance of the Agreement. This Agreement is made by and between you ("Customer") and Analog Devices, Inc. ("ADI"), with its principal place of business at One Technology Way, Norwood, MA 02062, USA. Subject to the terms and conditions of the Agreement, ADI hereby grants to Customer a free, limited, personal, temporary, non-exclusive, non-sublicensable, non-transferable license to use the Evaluation Board FOR EVALUATION PURPOSES ONLY. Customer understands and agrees that the Evaluation Board is provided for the sole and exclusive purpose referenced above, and agrees not to use the Evaluation Board for any other purpose. Furthermore, the license granted is expressly made subject to the following additional limitations: Customer shall not (i) rent, lease, display, sell, transfer, assign, sublicense, or distribute the Evaluation Board; and (ii) permit any Third Party to access the Evaluation Board. As used herein, the term "Third Party" includes any entity other than ADI, Customer, their employees, affiliates and in-house consultants. The Evaluation Board is NOT sold to Customer; all rights not expressly granted herein, including ownership of the Evaluation Board, are reserved by ADI. CONFIDENTIALITY. This Agreement and the Evaluation Board shall all be considered the confidential and proprietary information of ADI. Customer may not disclose or transfer any portion of the Evaluation Board to any other party for any reason. Upon discontinuation of use of the Evaluation Board or termination of this Agreement, Customer agrees to promptly return the Evaluation Board to ADI. ADDITIONAL RESTRICTIONS. Customer may not disassemble, decompile or reverse engineer chips on the Evaluation Board. Customer shall inform ADI of any occurred damages or any modifications or alterations it makes to the Evaluation Board, including but not limited to soldering or any other activity that affects the material content of the Evaluation Board. Modifications to the Evaluation Board must comply with applicable law, including but not limited to the RoHS Directive. TERMINATION. ADI may terminate this Agreement at any time upon giving written notice to Customer. Customer agrees to return to ADI the Evaluation Board at that time. LIMITATION OF LIABILITY. THE EVALUATION BOARD PROVIDED HEREUNDER IS PROVIDED "AS IS" AND ADI MAKES NO WARRANTIES OR REPRESENTATIONS OF ANY KIND WITH RESPECT TO IT. ADI SPECIFICALLY DISCLAIMS ANY REPRESENTATIONS, ENDORSEMENTS, GUARANTEES, OR WARRANTIES, EXPRESS OR IMPLIED, RELATED TO THE EVALUATION BOARD INCLUDING, BUT NOT LIMITED TO, THE IMPLIED WARRANTY OF MERCHANTABILITY, TITLE, FITNESS FOR A PARTICULAR PURPOSE OR NONINFRINGEMENT OF INTELLECTUAL PROPERTY RIGHTS. IN NO EVENT WILL ADI AND ITS LICENSORS BE LIABLE FOR ANY INCIDENTAL, SPECIAL, INDIRECT, OR CONSEQUENTIAL DAMAGES RESULTING FROM CUSTOMER'S POSSESSION OR USE OF THE EVALUATION BOARD, INCLUDING BUT NOT LIMITED TO LOST PROFITS, DELAY COSTS, LABOR COSTS OR LOSS OF GOODWILL. ADI'S TOTAL LIABILITY FROM ANY AND ALL CAUSES SHALL BE LIMITED TO THE AMOUNT OF ONE HUNDRED US DOLLARS ($100.00). EXPORT. Customer agrees that it will not directly or indirectly export the Evaluation Board to another country, and that it will comply with all applicable United States federal laws and regulations relating to exports. GOVERNING LAW. This Agreement shall be governed by and construed in accordance with the substantive laws of the Commonwealth of Massachusetts (excluding conflict of law rules). Any legal action regarding this Agreement will be heard in the state or federal courts having jurisdiction in Suffolk County, Massachusetts, and Customer hereby submits to the personal jurisdiction and venue of such courts. The United Nations Convention on Contracts for the International Sale of Goods shall not apply to this Agreement and is expressly disclaimed.

©2010–2011 Analog Devices, Inc. All rights reserved. Trademarks and registered trademarks are the property of their respective owners.
UG08885-0-4/11(A)

ANALOG DEVICES

www.analog.com

Компания «ЭлектроПласт» предлагает заключение долгосрочных отношений при поставках импортных электронных компонентов на взаимовыгодных условиях!

Наши преимущества:

- Оперативные поставки широкого спектра электронных компонентов отечественного и импортного производства напрямую от производителей и с крупнейших мировых складов;
- Поставка более 17-ти миллионов наименований электронных компонентов;
- Поставка сложных, дефицитных, либо снятых с производства позиций;
- Оперативные сроки поставки под заказ (от 5 рабочих дней);
- Экспресс доставка в любую точку России;
- Техническая поддержка проекта, помощь в подборе аналогов, поставка прототипов;
- Система менеджмента качества сертифицирована по Международному стандарту ISO 9001;
- Лицензия ФСБ на осуществление работ с использованием сведений, составляющих государственную тайну;
- Поставка специализированных компонентов (Xilinx, Altera, Analog Devices, Intersil, Interpoint, Microsemi, Aeroflex, Peregrine, Syfer, Eurofarad, Texas Instrument, Miteq, Cobham, E2V, MA-COM, Hittite, Mini-Circuits,General Dynamics и др.);

Помимо этого, одним из направлений компании «ЭлектроПласт» является направление «Источники питания». Мы предлагаем Вам помощь Конструкторского отдела:

- Подбор оптимального решения, техническое обоснование при выборе компонента;
- Подбор аналогов;
- Консультации по применению компонента;
- Поставка образцов и прототипов;
- Техническая поддержка проекта;
- Защита от снятия компонента с производства.

Как с нами связаться

Телефон: 8 (812) 309 58 32 (многоканальный)
Факс: 8 (812) 320-02-42
Электронная почта: org@eplast1.ru
Адрес: 198099, г. Санкт-Петербург, ул. Калинина, дом 2, корпус 4, литера А.