To our customers,

Old Company Name in Catalogs and Other Documents

On April 1st, 2010, NEC Electronics Corporation merged with Renesas Technology Corporation, and Renesas Electronics Corporation took over all the business of both companies. Therefore, although the old company name remains in this document, it is a valid Renesas Electronics document. We appreciate your understanding.

Renesas Electronics website: http://www.renesas.com

April 1st, 2010
Renesas Electronics Corporation

Issued by: Renesas Electronics Corporation (http://www.renesas.com)

Send any inquiries to http://www.renesas.com/inquiry.

RENESAS

Notice

1. All information included in this document is current as of the date this document is issued. Such information, however, is subject to change without any prior notice. Before purchasing or using any Renesas Electronics products listed herein, please confirm the latest product information with a Renesas Electronics sales office. Also, please pay regular and careful attention to additional and different information to be disclosed by Renesas Electronics such as that disclosed through our website.
2. Renesas Electronics does not assume any liability for infringement of patents, copyrights, or other intellectual property rights of third parties by or arising from the use of Renesas Electronics products or technical information described in this document. No license, express, implied or otherwise, is granted hereby under any patents, copyrights or other intellectual property rights of Renesas Electronics or others.
3. You should not alter, modify, copy, or otherwise misappropriate any Renesas Electronics product, whether in whole or in part.
4. Descriptions of circuits, software and other related information in this document are provided only to illustrate the operation of semiconductor products and application examples. You are fully responsible for the incorporation of these circuits, software, and information in the design of your equipment. Renesas Electronics assumes no responsibility for any losses incurred by you or third parties arising from the use of these circuits, software, or information.
5. When exporting the products or technology described in this document, you should comply with the applicable export control laws and regulations and follow the procedures required by such laws and regulations. You should not use Renesas Electronics products or the technology described in this document for any purpose relating to military applications or use by the military, including but not limited to the development of weapons of mass destruction. Renesas Electronics products and technology may not be used for or incorporated into any products or systems whose manufacture, use, or sale is prohibited under any applicable domestic or foreign laws or regulations.
6. Renesas Electronics has used reasonable care in preparing the information included in this document, but Renesas Electronics does not warrant that such information is error free. Renesas Electronics assumes no liability whatsoever for any damages incurred by you resulting from errors in or omissions from the information included herein.
7. Renesas Electronics products are classified according to the following three quality grades: "Standard", "High Quality", and "Specific". The recommended applications for each Renesas Electronics product depends on the product's quality grade, as indicated below. You must check the quality grade of each Renesas Electronics product before using it in a particular application. You may not use any Renesas Electronics product for any application categorized as "Specific" without the prior written consent of Renesas Electronics. Further, you may not use any Renesas Electronics product for any application for which it is not intended without the prior written consent of Renesas Electronics. Renesas Electronics shall not be in any way liable for any damages or losses incurred by you or third parties arising from the use of any Renesas Electronics product for an application categorized as "Specific" or for which the product is not intended where you have failed to obtain the prior written consent of Renesas Electronics. The quality grade of each Renesas Electronics product is "Standard" unless otherwise expressly specified in a Renesas Electronics data sheets or data books, etc.

   "Standard": Computers; office equipment; communications equipment; test and measurement equipment; audio and visual equipment; home electronic appliances; machine tools; personal electronic equipment; and industrial robots.

   "High Quality": Transportation equipment (automobiles, trains, ships, etc.); traffic control systems; anti-disaster systems; anti-crime systems; safety equipment; and medical equipment not specifically designed for life support.

   "Specific": Aircraft; aerospace equipment; submersible repeaters; nuclear reactor control systems; medical equipment or systems for life support (e.g. artificial life support devices or systems), surgical implantations, or healthcare intervention (e.g. excision, etc.), and any other applications or purposes that pose a direct threat to human life.
8. You should use the Renesas Electronics products described in this document within the range specified by Renesas Electronics, especially with respect to the maximum rating, operating supply voltage range, movement power voltage range, heat radiation characteristics, installation and other product characteristics. Renesas Electronics shall have no liability for malfunctions or damages arising out of the use of Renesas Electronics products beyond such specified ranges.
9. Although Renesas Electronics endeavors to improve the quality and reliability of its products, semiconductor products have specific characteristics such as the occurrence of failure at a certain rate and malfunctions under certain use conditions. Further, Renesas Electronics products are not subject to radiation resistance design. Please be sure to implement safety measures to guard them against the possibility of physical injury, and injury or damage caused by fire in the event of the failure of a Renesas Electronics product, such as safety design for hardware and software including but not limited to redundancy, fire control and malfunction prevention, appropriate treatment for aging degradation or any other appropriate measures. Because the evaluation of microcomputer software alone is very difficult, please evaluate the safety of the final products or system manufactured by you.
10. Please contact a Renesas Electronics sales office for details as to environmental matters such as the environmental compatibility of each Renesas Electronics product. Please use Renesas Electronics products in compliance with all applicable laws and regulations that regulate the inclusion or use of controlled substances, including without limitation, the EU RoHS Directive. Renesas Electronics assumes no liability for damages or losses occurring as a result of your noncompliance with applicable laws and regulations.
11. This document may not be reproduced or duplicated, in any form, in whole or in part, without prior written consent of Renesas Electronics.
12. Please contact a Renesas Electronics sales office if you have any questions regarding the information contained in this document or Renesas Electronics products, or if you have any other inquiries.

(Note 1) "Renesas Electronics" as used in this document means Renesas Electronics Corporation and also includes its majority-owned subsidiaries.

(Note 2) "Renesas Electronics product(s)" means any product developed or manufactured by or for Renesas Electronics.

User's Manual

16

H8S/2357 Group, H8S/2357F-ZTAT™, H8S/2398F-ZTAT™

Hardware Manual

Renesas 16-Bit Single-chip Microcomputer
H8S Family / H8S/2300 Series

All information contained in these materials, including products and product specifications, represents information on the product at the time of publication and is subject to change by Renesas Electronics Corp. without notice. Please review the latest information published by Renesas Electronics Corp. through various means, including the Renesas Electronics Corp. website (http://www.renesas.com).

Renesas Electronics
www.renesas.com

Rev. 6.00 2004.10

Keep safety first in your circuit designs!

1. Renesas Technology Corp. puts the maximum effort into making semiconductor products better and more reliable, but there is always the possibility that trouble may occur with them. Trouble with semiconductors may lead to personal injury, fire or property damage.
   Remember to give due consideration to safety when making your circuit designs, with appropriate measures such as (i) placement of substitutive, auxiliary circuits, (ii) use of nonflammable material or (iii) prevention against any malfunction or mishap.

Notes regarding these materials

1. These materials are intended as a reference to assist our customers in the selection of the Renesas Technology Corp. product best suited to the customer's application; they do not convey any license under any intellectual property rights, or any other rights, belonging to Renesas Technology Corp. or a third party.
2. Renesas Technology Corp. assumes no responsibility for any damage, or infringement of any third-party's rights, originating in the use of any product data, diagrams, charts, programs, algorithms, or circuit application examples contained in these materials.
3. All information contained in these materials, including product data, diagrams, charts, programs and algorithms represents information on products at the time of publication of these materials, and are subject to change by Renesas Technology Corp. without notice due to product improvements or other reasons. It is therefore recommended that customers contact Renesas Technology Corp. or an authorized Renesas Technology Corp. product distributor for the latest product information before purchasing a product listed herein.
   The information described here may contain technical inaccuracies or typographical errors. Renesas Technology Corp. assumes no responsibility for any damage, liability, or other loss rising from these inaccuracies or errors.
   Please also pay attention to information published by Renesas Technology Corp. by various means, including the Renesas Technology Corp. Semiconductor home page (http://www.renesas.com).
4. When using any or all of the information contained in these materials, including product data, diagrams, charts, programs, and algorithms, please be sure to evaluate all information as a total system before making a final decision on the applicability of the information and products. Renesas Technology Corp. assumes no responsibility for any damage, liability or other loss resulting from the information contained herein.
5. Renesas Technology Corp. semiconductors are not designed or manufactured for use in a device or system that is used under circumstances in which human life is potentially at stake. Please contact Renesas Technology Corp. or an authorized Renesas Technology Corp. product distributor when considering the use of a product contained herein for any specific purposes, such as apparatus or systems for transportation, vehicular, medical, aerospace, nuclear, or undersea repeater use.
6. The prior written approval of Renesas Technology Corp. is necessary to reprint or reproduce in whole or in part these materials.
7. If these products or technologies are subject to the Japanese export control restrictions, they must be exported under a license from the Japanese government and cannot be imported into a country other than the approved destination.
   Any diversion or reexport contrary to the export control laws and regulations of Japan and/or the country of destination is prohibited.
8. Please contact Renesas Technology Corp. for further details on these materials or the products contained therein.

General Precautions on Handling of Product

1. Treatment of NC Pins

Note: Do not connect anything to the NC pins.
The NC (not connected) pins are either not connected to any of the internal circuitry or are they are used as test pins or to reduce noise. If something is connected to the NC pins, the operation of the LSI is not guaranteed.

2. Treatment of Unused Input Pins

Note: Fix all unused input pins to high or low level.
Generally, the input pins of CMOS products are high-impedance input pins. If unused pins are in their open states, intermediate levels are induced by noise in the vicinity, a pass-through current flows internally, and a malfunction may occur.

3. Processing before Initialization

Note: When power is first supplied, the product's state is undefined.
The states of internal circuits are undefined until full power is supplied throughout the chip and a low level is input on the reset pin. During the period where the states are undefined, the register settings and the output state of each pin are also undefined. Design your system so that it does not malfunction because of processing while it is in this undefined state. For those products which have a reset function, reset the LSI immediately after the power supply has been turned on.

4. Prohibition of Access to Undefined or Reserved Addresses

Note: Access to undefined or reserved addresses is prohibited.
The undefined or reserved addresses may be used to expand functions, or test registers may have been be allocated to these addresses. Do not access these registers; the system's operation is not guaranteed if they are accessed.

Preface

This LSI is a single-chip microcomputer with a 32-bit H8S/2000 CPU core, and a set of on-chip peripheral functions required for system configuration.

This LSI is equipped with ROM, RAM, a bus controller, a data transfer controller (DTC), a programmable pulse generator (PPG), three types of timers, a serial communication interface (SCI), a D/A converter, an A/D converter, and I/O ports as on-chip peripheral functions. This LSI is suitable for use as an embedded microcomputer for high-level control systems. Its on-chip ROM is flash memory (F-ZTAT™*), PROM (ZTAT®*), or masked ROM that provides flexibility as it can be reprogrammed in no time to cope with all situations from the early stages of mass production to full-scale mass production. This is particularly applicable to application devices with specifications that will most probably change.

Note: * F-ZTAT is a trademark of Renesas Technology, Corp.
ZTAT is a registered trademark of Renesas Technology, Corp.

Target Users: This manual was written for users who will be using the H8S/2357 Group in the design of application systems. Members of this audience are expected to understand the fundamentals of electrical circuits, logical circuits, and microcomputers.

Objective: This manual was written to explain the hardware functions and electrical characteristics of the H8S/2357 Group to the above audience.
Refer to the H8S/2600 Series, H8S/2000 Series Programming Manual for a detailed description of the instruction set.

Notes on reading this manual:

- In order to understand the overall functions of the chip
  Read the manual according to the contents. This manual can be roughly categorized into parts on the CPU, system control functions, peripheral functions, and electrical characteristics.
- In order to understand the details of the CPU's functions
  Read the H8S/2600 Series, H8S/2000 Series Programming Manual.
- In order to understand the details of a register when its name is known
  The addresses, bits, and initial values of the registers are summarized in Appendix B, Internal I/O Register.
  Examples: Bit order: The MSB is on the left and the LSB is on the right.

Related Manuals: The latest versions of all related manuals are available from our web site. Please ensure you have the latest versions of all documents you require.
http://www.renesas.com/eng/

H8S/2357 Group user's manuals:

Manual Title	Document No.
H8S/2357 Group Hardware Manual	This manual
H8S/2600 Series, H8S/2000 Series Programming Manual	REJ09B0139

User's manuals for development tools:

Manual Title	Document No.
H8S, H8/300 Series C/C++ Compiler, Assembler, Optimized Linkage Editor User's Manual	REJ10B0058
H8S, H8/300 Series Simulator/Debugger (for Windows) User's Manual	ADE-702-037
H8S, H8/300 Series High-performance Embedded Workshop User's Manual	ADE-702-201

Application Note:

Manual Title	Document No.
H8S Family Technical Q & A	REJ05B0397

Main Revisions for This Edition

Item	Page	Revision (See Manual for Details)
1.1 Overview Table 1-1 Overview	5	Product lineup HD64F2398F20T*3 and HD64F2398TE20T*3 added **5V version** F-ZTAT Version* HD64F2357F20 HD64F2357TE20 HD64F2398F20 HD64F2398TE20 HD64F2398F20T*3 HD64F2398TE20T*3 Note 3 added as follows Note: 3. For the HD64F2398F20T and HD64F2398TE20T only, the maximum number of times the flash memory can be reprogrammed is 1,000.
4.1.3 Exception Vector Table	72	Description amended In modes 6 and 7 the on-chip ROM ...In this case, clearing the EAE bit in BCRL enables the 128-kbyte (256-kbytes)* area comprising address H'000000 to H'01FFFF (H'03FFFF)* to be used.
6.6.1 When DDS = 1 Figure 6-28 $\overline{DACK}$ Output Timing when DDS = 1 (Example of DRAM Access)	149	Figure 6-28 amended 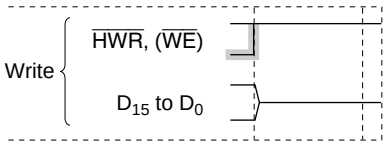
6.6.2 When DDS = 0 Figure 6-29 $\overline{DACK}$ Output Timing when DDS = 0 (Example of DRAM Access)	150	Figure 6-29 amended 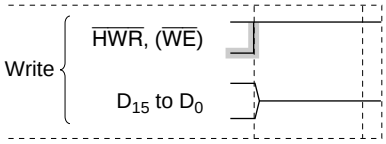
6.8.2 Usage Notes Figure 6-35(a) Example of Idle Cycle Operation in RAS Down Mode (ICIS1 = 1) Figure 6-35(b) Example of Idle Cycle Operation in RAS Down Mode (ICIS0 = 1)	156	Figure 6-35(a) amended 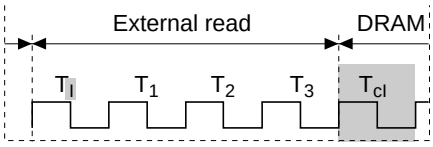 Figure 6-35(b) amended 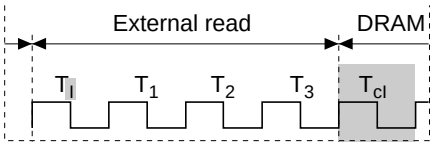

Item	Page	Revision (See Manual for Details)
9.8.2 Register Configuration	303	Note added Port A MOS Pull-Up Control Register (PAPCR) (ON-Chip ROM Version Only) Bit : 7 6 5 4 3 2 1 0 PA7PCR PA6PCR PA5PCR PA4PCR PA3PCR PA2PCR PA1PCR PA0PCR Initial value : 0 0 0 0 0 0 0 0 R/W : R/W R/W R/W R/W R/W R/W R/W R/W Note: Setting is prohibited in the H8S/2352, H8S/2394, H8S/2392, and H8S/2390.
	304	Port A Open Drain Control Register (PAODR) (ON-Chip ROM Version Only) Bit : 7 6 5 4 3 2 1 0 PA7ODR PA6ODR PA5ODR PA4ODR PA3ODR PA2ODR PA1ODR PA0ODR Initial value : 0 0 0 0 0 0 0 0 R/W : R/W R/W R/W R/W R/W R/W R/W R/W Note: Setting is prohibited in the H8S/2352, H8S/2394, H8S/2392, and H8S/2390.
9.9.2 Register Configuration (On-Chip ROM Version Only)	309	Note added Port B MOS Pull-Up Control Register (PBPCR) (ON-Chip ROM Version Only) Bit : 7 6 5 4 3 2 1 0 PB7PCR PB6PCR PB5PCR PB4PCR PB3PCR PB2PCR PB1PCR PB0PCR Initial value : 0 0 0 0 0 0 0 0 R/W : R/W R/W R/W R/W R/W R/W R/W R/W Note: Setting is prohibited in the H8S/2352, H8S/2394, H8S/2392, and H8S/2390.
9.10.2 Register Configuration (On-Chip ROM Version Only)	314	Note added Port C MOS Pull-Up Control Register (PCPCR) (ON-Chip ROM Version Only) Bit : 7 6 5 4 3 2 1 0 PC7PCR PC6PCR PC5PCR PC4PCR PC3PCR PC2PCR PC1PCR PC0PCR Initial value : 0 0 0 0 0 0 0 0 R/W : R/W R/W R/W R/W R/W R/W R/W R/W Note: Setting is prohibited in the H8S/2352, H8S/2394, H8S/2392, and H8S/2390.
9.11.2 Register Configuration (On-Chip ROM Version Only)	319	Note added Port D MOS Pull-Up Control Register (PDPCR) (ON-Chip ROM Version Only) Bit : 7 6 5 4 3 2 1 0 PD7PCR PD6PCR PD5PCR PD4PCR PD3PCR PD2PCR PD1PCR PD0PCR Initial value : 0 0 0 0 0 0 0 0 R/W : R/W R/W R/W R/W R/W R/W R/W R/W Note: Setting is prohibited in the H8S/2352, H8S/2394, H8S/2392, and H8S/2390.

Item	Page	Revision (See Manual for Details)
9.12.2 Register Configuration	324	Note added Port E MOS Pull-Up Control Register (PEPCR) (ON-Chip ROM Version Only) Bit : 7 6 5 4 3 2 1 0 PE7PCR PE6PCR PE5PCR PE4PCR PE3PCR PE2PCR PE1PCR PE0PCR Initial value : 0 0 0 0 0 0 0 0 R/W : R/W R/W R/W R/W R/W R/W R/W R/W Note: Setting is prohibited in the H8S/2352, H8S/2394, H8S/2392, and H8S/2390.
10.4.5 Cascaded Operation Figure10-23 Example of Cascaded Operation (2)	383	Figure 10-23 amended (Before) TCLKA → (After) TCLKC (Before) TCLKB → (After) TCLKD
10.7 Usage Note Figure 10-57 Contention between TCNT Write and Overflow	409	Figure 10-57 amended TCFV flag Prohibited
11.3.1 Overview Figure 11-2 PPG Output Operation	423	Figure 11-2 amended DDR
14.2.8 Bit Rate Register (BRR) Table 14-4 BRR Setting for Various Bit Rates (Clocked Synchronous Mode)	481	Note deleted form table 14-4
19.15.1 Features	619	• Reprogramming capability Description amended Depending on the product, the maximum number of times the flash memory can be reprogrammed is either 100 or 1,000. — Reprogrammable up to 100 times: HD64F2398TE, HD64F2398F — Reprogrammable up to 1,000 times: HD64F2398TET, HD64F2398FT

Item	Page	Revision (See Manual for Details)
19.18.2 Program-Verify Mode Figure 19-48 Program/Program-Verify Flowchart	639	Figure 19-48 amended, note *6 added

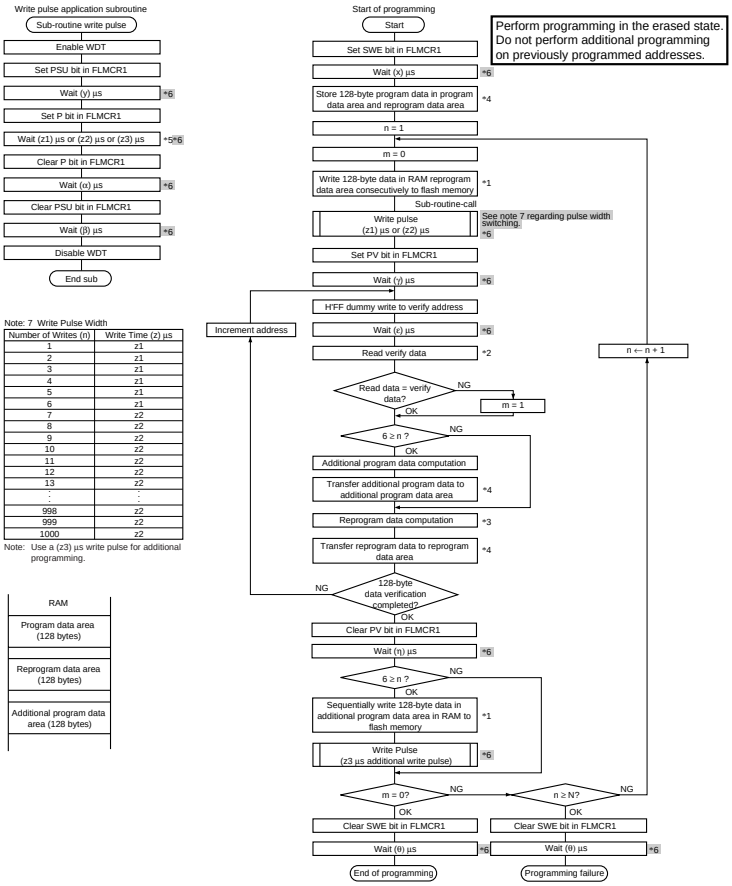

22.3.6 Flash Memory Characteristics Table 22-21 Flash Memory Characteristics (HD64F2398F20, HD64F2398TE20)	724	Table 22-21 title amended
Table 22-22 Flash Memory Characteristics (HD64F2398F20T, HD64F2398TE20T)	726	Table 22-22 added

Item	Page	Revision (See Manual for Details)
A.5 Bus States during Instruction Execution Table A-6 Instruction Execution Cycles	827	Table A-6 amended

Instruction		1	2	3	4	5	6	7	8	9
JMP @@aa:8	Advanced	R:W NEXT	R:W:M aa:8	R:W aa:8	Internal operation, 1 state	R:W EA				
JSR @ERn	Advanced	R:W NEXT	R:W EA	W:W:M stack (H)	W:W stack (L)					
JSR @aa:24	Advanced	R:W 2nd	Internal operation, 1 state	R:W EA	W:W:M stack (H)	W:W stack (L)				
JSR @@aa:8	Advanced	R:W NEXT	R:W:M aa:8	R:W aa:8	W:W:M stack (H)	W:W stack (L)	R:W EA			

Item	Page	Revision (See Manual for Details)
G. Product Code Lineup Table G-2 H8S/2398, H8S/2394, H8S/2392, H8S/2390 Group Product Code Lineup	1014	Table G-2 amended

Product Type		Product Code	Mark Code	Package (Package Code)
H8S/2398	Masked ROM	HD6432398	HD6432398TE*1	120-pin TQFP (TFP-120)
			HD6432398F*1	128-pin QFP (FP-128B)
	F-ZTAT	HD64F2398	HD64F2398TE*1	120-pin TQFP (TFP-120)
			HD64F2398F*1	128-pin QFP (FP-128B)
			HD64F2398TET	120-pin TQFP (TFP-120)
			HD64F2398FT	128-pin QFP (FP-128B)

H. Package Dimensions Figure H-1 TFP-120 Package Dimension	1015	Figure H-1 replaced

Contents

Section 1 Overview 1
1.1 Overview 1
1.2 Block Diagram 6
1.3 Pin Description 7
1.3.1 Pin Arrangement 7
1.3.2 Pin Functions in Each Operating Mode 11
1.3.3 Pin Functions 15

Section 2 CPU 21
2.1 Overview 21
2.1.1 Features 21
2.1.2 Differences between H8S/2600 CPU and H8S/2000 CPU 22
2.1.3 Differences from H8/300 CPU 22
2.1.4 Differences from H8/300H CPU 23
2.2 CPU Operating Modes 23
2.2.1 Advanced Mode 23
2.3 Address Space 26
2.4 Register Configuration 27
2.4.1 Overview 27
2.4.2 General Registers 27
2.4.3 Control Registers 28
2.4.4 Initial Register Values 29
2.5 Data Formats 30
2.5.1 General Register Data Formats 30
2.5.2 Memory Data Formats 32
2.6 Instruction Set 33
2.6.1 Overview 33
2.6.2 Instructions and Addressing Modes 34
2.6.3 Table of Instructions Classified by Function 35
2.6.4 Basic Instruction Formats 41
2.7 Addressing Modes and Effective Address Calculation 41
2.7.1 Addressing Mode 41
2.7.2 Effective Address Calculation 44
2.8 Processing States 47
2.8.1 Overview 47
2.8.2 Reset State 48
2.8.3 Exception-Handling State 48
2.8.4 Program Execution State 50
2.8.5 Bus-Released State 50
2.8.6 Power-Down State 50
2.9 Basic Timing 51
2.9.1 Overview 51
2.9.2 On-Chip Memory (ROM, RAM) 51
2.9.3 On-Chip Supporting Module Access Timing 52
2.9.4 External Address Space Access Timing 53
2.10 Usage Note 53
2.10.1 TAS Instruction 53

Section 3 MCU Operating Modes 55
3.1 Overview 55
3.1.1 Operating Mode Selection (H8S/2357 F-ZTAT Only) 55
3.1.2 Operating Mode Selection (ZTAT, Masked ROM, ROMless Version, and H8S/2398 F-ZTAT) 56
3.1.3 Register Configuration 57
3.2 Register Descriptions 57
3.2.1 Mode Control Register (MDCR) 57
3.2.2 System Control Register (SYSCR) 57
3.2.3 System Control Register 2 (SYSCR2) (F-ZTAT Version Only) 58
3.3 Operating Mode Descriptions 60
3.3.1 Mode 1 60
3.3.2 Mode 2 (H8S/2398 F-ZTAT Only) 60
3.3.3 Mode 3 (H8S/2398 F-ZTAT Only) 60
3.3.4 Mode 4 (On-Chip ROM Disabled Expansion Mode) 60
3.3.5 Mode 5 (On-Chip ROM Disabled Expansion Mode) 60
3.3.6 Mode 6 (On-Chip ROM Enabled Expansion Mode) 60
3.3.7 Mode 7 (Single-Chip Mode) 61
3.3.8 Modes 8 and 9 61
3.3.9 Mode 10 (H8S/2357 F-ZTAT Only) 61
3.3.10 Mode 11 (H8S/2357 F-ZTAT Only) 61
3.3.11 Modes 12 and 13 (H8S/2357 F-ZTAT Only) 61
3.3.12 Mode 14 (H8S/2357 F-ZTAT Only) 61
3.3.13 Mode 15 (H8S/2357 F-ZTAT Only) 61
3.4 Pin Functions in Each Operating Mode 62
3.5 Memory Map in Each Operating Mode 62

Section 4 Exception Handling 71
4.1 Overview 71
4.1.1 Exception Handling Types and Priority 71
4.1.2 Exception Handling Operation 72
4.1.3 Exception Vector Table 72
4.2 Reset 74
4.2.1 Overview 74
4.2.2 Reset Types 74
4.2.3 Reset Sequence 75
4.2.4 Interrupts after Reset 76
4.2.5 State of On-Chip Supporting Modules after Reset Release 76
4.3 Traces 76
4.4 Interrupts 77
4.5 Trap Instruction 78
4.6 Stack Status after Exception Handling 78
4.7 Notes on Use of the Stack 79

Section 5 Interrupt Controller 81
5.1 Overview 81
5.1.1 Features 81
5.1.2 Block Diagram 82
5.1.3 Pin Configuration 82
5.1.4 Register Configuration 83
5.2 Register Descriptions 83
5.2.1 System Control Register (SYSCR) 83

5.2.2 Interrupt Priority Registers A to K (IPRA to IPRK) 84
5.2.3 IRQ Enable Register (IER) 85
5.2.4 IRQ Sense Control Registers H and L (ISCRH, ISCRL) 86
5.2.5 IRQ Status Register (ISR) 86
5.3 Interrupt Sources 87
5.3.1 External Interrupts 87
5.3.2 Internal Interrupts 88
5.3.3 Interrupt Exception Handling Vector Table 88
5.4 Interrupt Operation 91
5.4.1 Interrupt Control Modes and Interrupt Operation 91
5.4.2 Interrupt Control Mode 0 93
5.4.3 Interrupt Control Mode 2 95
5.4.4 Interrupt Exception Handling Sequence 97
5.4.5 Interrupt Response Times 98
5.5 Usage Notes 99
5.5.1 Contention between Interrupt Generation and Disabling 99
5.5.2 Instructions that Disable Interrupts 99
5.5.3 Times when Interrupts are Disabled 100
5.5.4 Interrupts during Execution of EEPMOV Instruction 100
5.6 DTC and DMAC Activation by Interrupt 100
5.6.1 Overview 100
5.6.2 Block Diagram 101
5.6.3 Operation 101
5.6.4 Note on Use 102

Section 6 Bus Controller 103
6.1 Overview 103
6.1.1 Features 103
6.1.2 Block Diagram 105
6.1.3 Pin Configuration 106
6.1.4 Register Configuration 107
6.2 Register Descriptions 108
6.2.1 Bus Width Control Register (ABWCR) 108
6.2.2 Access State Control Register (ASTCR) 109
6.2.3 Wait Control Registers H and L (WCRH, WCRL) 110
6.2.4 Bus Control Register H (BCRH) 113
6.2.5 Bus Control Register L (BCRL) 114
6.2.6 Memory Control Register (MCR) 116
6.2.7 DRAM Control Register (DRAMCR) 118
6.2.8 Refresh Timer/Counter (RTCNT) 119
6.2.9 Refresh Time Constant Register (RTCOR) 120
6.3 Overview of Bus Control 121
6.3.1 Area Partitioning 121
6.3.2 Bus Specifications 122
6.3.3 Memory Interfaces 123
6.3.4 Advanced Mode 123
6.3.5 Chip Select Signals 124
6.4 Basic Bus Interface 125
6.4.1 Overview 125
6.4.2 Data Size and Data Alignment 125
6.4.3 Valid Strobes 127
6.4.4 Basic Timing 128

6.4.5 Wait Control 136
6.5 DRAM Interface 138
6.5.1 Overview 138
6.5.2 Setting DRAM Space 138
6.5.3 Address Multiplexing 138
6.5.4 Data Bus 138
6.5.5 Pins Used for DRAM Interface 139
6.5.6 Basic Timing 140
6.5.7 Precharge State Control 141
6.5.8 Wait Control 141
6.5.9 Byte Access Control 143
6.5.10 Burst Operation 144
6.5.11 Refresh Control 147
6.6 DMAC Single Address Mode and DRAM Interface 149
6.6.1 When DDS = 1 149
6.6.2 When DDS = 0 150
6.7 Burst ROM Interface 150
6.7.1 Overview 150
6.7.2 Basic Timing 151
6.7.3 Wait Control 152
6.8 Idle Cycle 153
6.8.1 Operation 153
6.8.2 Usage Notes 155
6.8.3 Pin States in Idle Cycle 157
6.9 Write Data Buffer Function 158
6.10 Bus Release 159
6.10.1 Overview 159
6.10.2 Operation 159
6.10.3 Pin States in External Bus Released State 160
6.10.4 Transition Timing 161
6.10.5 Usage Note 161
6.11 Bus Arbitration 162
6.11.1 Overview 162
6.11.2 Operation 162
6.11.3 Bus Transfer Timing 163
6.11.4 External Bus Release Usage Note 163
6.12 Resets and the Bus Controller 164

Section 7 DMA Controller 165
7.1 Overview 165
7.1.1 Features 165
7.1.2 Block Diagram 166
7.1.3 Overview of Functions 167
7.1.4 Pin Configuration 169
7.1.5 Register Configuration 170
7.2 Register Descriptions (1) (Short Address Mode) 171
7.2.1 Memory Address Registers (MAR) 172
7.2.2 I/O Address Register (IOAR) 172
7.2.3 Execute Transfer Count Register (ETCR) 173
7.2.4 DMA Control Register (DMACR) 174
7.2.5 DMA Band Control Register (DMABCR) 177
7.3 Register Descriptions (2) (Full Address Mode) 181

7.3.1 Memory Address Register (MAR) 181
7.3.2 I/O Address Register (IOAR) 181
7.3.3 Execute Transfer Count Register (ETCR) 181
7.3.4 DMA Control Register (DMACR) 183
7.3.5 DMA Band Control Register (DMABCR) 186
7.4 Register Descriptions (3) 190
7.4.1 DMA Write Enable Register (DMAWER) 190
7.4.2 DMA Terminal Control Register (DMATCR) 192
7.4.3 Module Stop Control Register (MSTPCR) 193
7.5 Operation 194
7.5.1 Transfer Modes 194
7.5.2 Sequential Mode 196
7.5.3 Idle Mode 199
7.5.4 Repeat Mode 201
7.5.5 Single Address Mode 204
7.5.6 Normal Mode 207
7.5.7 Block Transfer Mode 210
7.5.8 DMAC Activation Sources 215
7.5.9 Basic DMAC Bus Cycles 217
7.5.10 DMAC Bus Cycles (Dual Address Mode) 218
7.5.11 DMAC Bus Cycles (Single Address Mode) 226
7.5.12 Write Data Buffer Function 230
7.5.13 DMAC Multi-Channel Operation 231
7.5.14 Relation between External Bus Requests, Refresh Cycles, the DTC, and the DMAC 232
7.5.15 NMI Interrupts and DMAC 233
7.5.16 Forced Termination of DMAC Operation 234
7.5.17 Clearing Full Address Mode 235
7.6 Interrupts 236
7.7 Usage Notes 237

Section 8 Data Transfer Controller 241
8.1 Overview 241
8.1.1 Features 241
8.1.2 Block Diagram 242
8.1.3 Register Configuration 243
8.2 Register Descriptions 244
8.2.1 DTC Mode Register A (MRA) 244
8.2.2 DTC Mode Register B (MRB) 245
8.2.3 DTC Source Address Register (SAR) 246
8.2.4 DTC Destination Address Register (DAR) 246
8.2.5 DTC Transfer Count Register A (CRA) 246
8.2.6 DTC Transfer Count Register B (CRB) 246
8.2.7 DTC Enable Registers (DTCER) 247
8.2.8 DTC Vector Register (DTVECR) 247
8.2.9 Module Stop Control Register (MSTPCR) 248
8.3 Operation 249
8.3.1 Overview 249
8.3.2 Activation Sources 251
8.3.3 DTC Vector Table 252
8.3.4 Location of Register Information in Address Space 255
8.3.5 Normal Mode 256
8.3.6 Repeat Mode 257

8.3.7 Block Transfer Mode 258
8.3.8 Chain Transfer 259
8.3.9 Operation Timing 260
8.3.10 Number of DTC Execution States 261
8.3.11 Procedures for Using DTC 262
8.3.12 Examples of Use of the D7TC 262
8.4 Interrupts 264
8.5 Usage Notes 264

Section 9 I/O Ports 265
9.1 Overview 265
9.2 Port 1 269
9.2.1 Overview 269
9.2.2 Register Configuration 269
9.2.3 Pin Functions 271
9.3 Port 2 279
9.3.1 Overview 279
9.3.2 Register Configuration 279
9.3.3 Pin Functions 281
9.4 Port 3 289
9.4.1 Overview 289
9.4.2 Register Configuration 289
9.4.3 Pin Functions 291
9.5 Port 4 293
9.5.1 Overview 293
9.5.2 Register Configuration 293
9.5.3 Pin Functions 293
9.6 Port 5 294
9.6.1 Overview 294
9.6.2 Register Configuration 294
9.6.3 Pin Functions 296
9.7 Port 6 297
9.7.1 Overview 297
9.7.2 Register Configuration 297
9.7.3 Pin Functions 299
9.8 Port A 301
9.8.1 Overview 301
9.8.2 Register Configuration 302
9.8.3 Pin Functions 304
9.8.4 MOS Input Pull-Up Function (On-Chip ROM Version Only) 306
9.9 Port B 307
9.9.1 Overview 307
9.9.2 Register Configuration (On-Chip ROM Version Only) 308
9.9.3 Pin Functions 310
9.9.4 MOS Input Pull-Up Function (On-Chip ROM Version Only) 311
9.10 Port C 312
9.10.1 Overview 312
9.10.2 Register Configuration (On-Chip ROM Version Only) 313
9.10.3 Pin Functions 315
9.10.4 MOS Input Pull-Up Function (On-Chip ROM Version Only) 316
9.11 Port D 317
9.11.1 Overview 317

9.11.2 Register Configuration (On-Chip ROM Version Only) 318
9.11.3 Pin Functions 320
9.11.4 MOS Input Pull-Up Function (On-Chip ROM Version Only) 321
9.12 Port E 322
9.12.1 Overview 322
9.12.2 Register Configuration 323
9.12.3 Pin Functions 325
9.12.4 MOS Input Pull-Up Function (On-Chip ROM Version Only) 326
9.13 Port F 327
9.13.1 Overview 327
9.13.2 Register Configuration 328
9.13.3 Pin Functions 330
9.14 Port G 332
9.14.1 Overview 332
9.14.2 Register Configuration 332
9.14.3 Pin Functions 335

Section 10 16-Bit Timer Pulse Unit (TPU) 337
10.1 Overview 337
10.1.1 Features 337
10.1.2 Block Diagram 341
10.1.3 Pin Configuration 342
10.1.4 Register Configuration 343
10.2 Register Descriptions 345
10.2.1 Timer Control Register (TCR) 345
10.2.2 Timer Mode Register (TMDR) 349
10.2.3 Timer I/O Control Register (TIOR) 351
10.2.4 Timer Interrupt Enable Register (TIER) 361
10.2.5 Timer Status Register (TSR) 363
10.2.6 Timer Counter (TCNT) 366
10.2.7 Timer General Register (TGR) 366
10.2.8 Timer Start Register (TSTR) 366
10.2.9 Timer Synchro Register (TSYR) 367
10.2.10 Module Stop Control Register (MSTPCR) 368
10.3 Interface to Bus Master 369
10.3.1 16-Bit Registers 369
10.3.2 8-Bit Registers 370
10.4 Operation 371
10.4.1 Overview 371
10.4.2 Basic Functions 372
10.4.3 Synchronous Operation 377
10.4.4 Buffer Operation 379
10.4.5 Cascaded Operation 382
10.4.6 PWM Modes 383
10.4.7 Phase Counting Mode 388
10.5 Interrupts 394
10.5.1 Interrupt Sources and Priorities 394
10.5.2 DTC/DMAC Activation 396
10.5.3 A/D Converter Activation 396
10.6 Operation Timing 397
10.6.1 Input/Output Timing 397
10.6.2 Interrupt Signal Timing 401

10.7 Usage Notes 404

Section 11 Programmable Pulse Generator (PPG) 411
11.1 Overview 411
11.1.1 Features 411
11.1.2 Block Diagram 412
11.1.3 Pin Configuration 413
11.1.4 Registers 414
11.2 Register Descriptions 415
11.2.1 Next Data Enable Registers H and L (NDERH, NDERL) 415
11.2.2 Output Data Registers H and L (PODRH, PODRL) 416
11.2.3 Next Data Registers H and L (NDRH, NDRL) 416
11.2.4 Notes on NDR Access 416
11.2.5 PPG Output Control Register (PCR) 418
11.2.6 PPG Output Mode Register (PMR) 419
11.2.7 Port 1 Data Direction Register (P1DDR) 421
11.2.8 Port 2 Data Direction Register (P2DDR) 421
11.2.9 Module Stop Control Register (MSTPCR) 422
11.3 Operation 423
11.3.1 Overview 423
11.3.2 Output Timing 424
11.3.3 Normal Pulse Output 425
11.3.4 Non-Overlapping Pulse Output 426
11.3.5 Inverted Pulse Output 429
11.3.6 Pulse Output Triggered by Input Capture 430
11.4 Usage Notes 431

Section 12 8-Bit Timers 433
12.1 Overview 433
12.1.1 Features 433
12.1.2 Block Diagram 434
12.1.3 Pin Configuration 435
12.1.4 Register Configuration 435
12.2 Register Descriptions 436
12.2.1 Timer Counters 0 and 1 (TCNT0, TCNT1) 436
12.2.2 Time Constant Registers A0 and A1 (TCORA0, TCORA1) 436
12.2.3 Time Constant Registers B0 and B1 (TCORB0, TCORB1) 437
12.2.4 Time Control Registers 0 and 1 (TCR0, TCR1) 437
12.2.5 Timer Control/Status Registers 0 and 1 (TCSR0, TCSR1) 439
12.2.6 Module Stop Control Register (MSTPCR) 441
12.3 Operation 442
12.3.1 TCNT Incrementation Timing 442
12.3.2 Compare Match Timing 443
12.3.3 Timing of External RESET on TCNT 444
12.3.4 Timing of Overflow Flag (OVF) Setting 444
12.3.5 Operation with Cascaded Connection 445
12.4 Interrupts 446
12.4.1 Interrupt Sources and DTC Activation 446
12.4.2 A/D Converter Activation 446
12.5 Sample Application 447
12.6 Usage Notes 448
12.6.1 Contention between TCNT Write and Clear 448

12.6.2 Contention between TCNT Write and Increment 449
12.6.3 Contention between TCOR Write and Compare Match 450
12.6.4 Contention between Compare Matches A and B 450
12.6.5 Switching of Internal Clocks and TCNT Operation 451
12.6.6 Interrupts and Module Stop Mode 452

Section 13 Watchdog Timer 453
13.1 Overview 453
13.1.1 Features 453
13.1.2 Block Diagram 454
13.1.3 Pin Configuration 454
13.1.4 Register Configuration 455
13.2 Register Descriptions 456
13.2.1 Timer Counter (TCNT) 456
13.2.2 Timer Control/Status Register (TCSR) 456
13.2.3 Reset Control/Status Register (RSTCSR) 457
13.2.4 Notes on Register Access 459
13.3 Operation 460
13.3.1 Watchdog Timer Operation 460
13.3.2 Interval Timer Operation 461
13.3.3 Timing of Setting Overflow Flag (OVF) 461
13.3.4 Timing of Setting of Watchdog Timer Overflow Flag (WOVF) 462
13.4 Interrupts 462
13.5 Usage Notes 463
13.5.1 Contention between Timer Counter (TCNT) Write and Increment 463
13.5.2 Changing Value of CKS2 to CKS0 463
13.5.3 Switching between Watchdog Timer Mode and Interval Timer Mode 463
13.5.4 System Reset by WDTOVF Signal 463
13.5.5 Internal Reset in Watchdog Timer Mode 464

Section 14 Serial Communication Interface (SCI) 465
14.1 Overview 465
14.1.1 Features 465
14.1.2 Block Diagram 467
14.1.3 Pin Configuration 467
14.1.4 Register Configuration 468
14.2 Register Descriptions 469
14.2.1 Receive Shift Register (RSR) 469
14.2.2 Receive Data Register (RDR) 469
14.2.3 Transmit Shift Register (TSR) 469
14.2.4 Transmit Data Register (TDR) 470
14.2.5 Serial Mode Register (SMR) 470
14.2.6 Serial Control Register (SCR) 472
14.2.7 Serial Status Register (SSR) 475
14.2.8 Bit Rate Register (BRR) 478
14.2.9 Smart Card Mode Register (SCMR) 485
14.2.10 Module Stop Control Register (MSTPCR) 486
14.3 Operation 487
14.3.1 Overview 487
14.3.2 Operation in Asynchronous Mode 489
14.3.3 Multiprocessor Communication Function 499
14.3.4 Operation in Clocked Synchronous Mode 505

14.4 SCI Interrupts 512
14.5 Usage Notes 514

Section 15 Smart Card Interface 517
15.1 Overview 517
15.1.1 Features 517
15.1.2 Block Diagram 518
15.1.3 Pin Configuration 518
15.1.4 Register Configuration 519
15.2 Register Descriptions 520
15.2.1 Smart Card Mode Register (SCMR) 520
15.2.2 Serial Status Register (SSR) 521
15.2.3 Serial Mode Register (SMR) 522
15.2.4 Serial Control Register (SCR) 523
15.3 Operation 524
15.3.1 Overview 524
15.3.2 Pin Connections 524
15.3.3 Data Format 525
15.3.4 Register Settings 526
15.3.5 Clock 527
15.3.6 Data Transfer Operations 529
15.3.7 Operation in GSM Mode 534
15.4 Usage Notes 535

Section 16 A/D Converter 539
16.1 Overview 539
16.1.1 Features 539
16.1.2 Block Diagram 540
16.1.3 Pin Configuration 540
16.1.4 Register Configuration 541
16.2 Register Descriptions 542
16.2.1 A/D Data Registers A to D (ADDRA to ADDRD) 542
16.2.2 A/D Control/Status Register (ADCSR) 542
16.2.3 A/D Control Register (ADCR) 544
16.2.4 Module Stop Control Register (MSTPCR) 545
16.3 Interface to Bus Master 546
16.4 Operation 546
16.4.1 Single Mode (SCAN = 0) 546
16.4.2 Scan Mode (SCAN = 1) 548
16.4.3 Input Sampling and A/D Conversion Time 549
16.4.4 External Trigger Input Timing 550
16.5 Interrupts 550
16.6 Usage Notes 551

Section 17 D/A Converter 555
17.1 Overview 555
17.1.1 Features 555
17.1.2 Block Diagram 555
17.1.3 Pin Configuration 556
17.1.4 Register Configuration 556
17.2 Register Descriptions 557
17.2.1 D/A Data Registers 0 and 1 (DADR0, DADR1) 557

17.2.2 D/A Control Register (DACR) 557
17.2.3 Module Stop Control Register (MSTPCR) 558
17.3 Operation 559

Section 18 RAM 561
18.1 Overview 561
18.1.1 Block Diagram 561
18.1.2 Register Configuration 561
18.2 Register Descriptions 562
18.2.1 System Control Register (SYSCR) 562
18.3 Operation 562
18.4 Usage Note 562

Section 19 ROM 563
19.1 Overview 563
19.1.1 Block Diagram 563
19.1.2 Register Configuration 563
19.2 Register Descriptions 564
19.2.1 Mode Control Register (MDCR) 564
19.2.2 Bus Control Register L (BCRL) 564
19.3 Operation 565
19.4 PROM Mode (H8S/2357 ZTAT) 566
19.4.1 PROM Mode Setting 566
19.4.2 Socket Adapter and Memory Map 567
19.5 Programming (H8S/2357 ZTAT) 569
19.5.1 Overview 569
19.5.2 Programming and Verification 570
19.5.3 Programming Precautions 572
19.5.4 Reliability of Programmed Data 573
19.6 Overview of Flash Memory (H8S/2357 F-ZTAT) 574
19.6.1 Features 574
19.6.2 Block Diagram 575
19.6.3 Flash Memory Operating Modes 576
19.6.4 Pin Configuration 581
19.6.5 Register Configuration 581
19.7 Register Descriptions 582
19.7.1 Flash Memory Control Register 1 (FLMCR1) 582
19.7.2 Flash Memory Control Register 2 (FLMCR2) 584
19.7.3 Erase Block Registers 1 and 2 (EBR1, EBR2) 585
19.7.4 System Control Register 2 (SYSCR2) 586
19.7.5 RAM Emulation Register (RAMER) 586
19.8 On-Board Programming Modes 588
19.8.1 Boot Mode 588
19.8.2 User Program Mode 592
19.9 Programming/Erasing Flash Memory 594
19.9.1 Program Mode 594
19.9.2 Program-Verify Mode 594
19.9.3 Erase Mode 596
19.9.4 Erase-Verify Mode 596
19.10 Flash Memory Protection 598
19.10.1 Hardware Protection 598
19.10.2 Software Protection 599

19.10.3 Error Protection 599
19.11 Flash Memory Emulation in RAM 601
19.11.1 Emulation in RAM 601
19.11.2 RAM Overlap 602
19.12 Interrupt Handling when Programming/Erasing Flash Memory 603
19.13 Flash Memory Programmer Mode 604
19.13.1 Programmer Mode Setting 604
19.13.2 Socket Adapters and Memory Map 604
19.13.3 Programmer Mode Operation 605
19.13.4 Memory Read Mode 606
19.13.5 Auto-Program Mode 609
19.13.6 Auto-Erase Mode 611
19.13.7 Status Read Mode 612
19.13.8 Status Polling 613
19.13.9 Programmer Mode Transition Time 613
19.13.10 Notes on Memory Programming 614
19.14 Flash Memory Programming and Erasing Precautions 614
19.15 Overview of Flash Memory (H8S/2398 F-ZTAT) 619
19.15.1 Features 619
19.15.2 Overview 620
19.15.3 Flash Memory Operating Modes 621
19.15.4 On-Board Programming Modes 622
19.15.5 Flash Memory Emulation in RAM 624
19.15.6 Differences between Boot Mode and User Program Mode 625
19.15.7 Block Configuration 625
19.15.8 Pin Configuration 626
19.15.9 Register Configuration 626
19.16 Register Descriptions 627
19.16.1 Flash Memory Control Register 1 (FLMCR1) 627
19.16.2 Flash Memory Control Register 2 (FLMCR2) 629
19.16.3 Erase Block Register 1 (EBR1) 629
19.16.4 Erase Block Registers 2 (EBR2) 630
19.16.5 System Control Register 2 (SYSCR2) 630
19.16.6 RAM Emulation Register (RAMER) 631
19.17 On-Board Programming Modes 632
19.17.1 Boot Mode 633
19.17.2 User Program Mode 637
19.18 Programming/Erasing Flash Memory 638
19.18.1 Program Mode 638
19.18.2 Program-Verify Mode 638
19.18.3 Erase Mode 640
19.18.4 Erase-Verify Mode 640
19.19 Flash Memory Protection 642
19.19.1 Hardware Protection 642
19.19.2 Software Protection 643
19.19.3 Error Protection 644
19.20 Flash Memory Emulation in RAM 645
19.20.1 Emulation in RAM 645
19.20.2 RAM Overlap 646
19.21 Interrupt Handling when Programming/Erasing Flash Memory 647
19.22 Flash Memory Programmer Mode 647
19.22.1 Programmer Mode Setting 647

19.22.2 Socket Adapters and Memory Map 648
19.22.3 Programmer Mode Operation 650
19.22.4 Memory Read Mode 651
19.22.5 Auto-Program Mode 653
19.22.6 Auto-Erase Mode 655
19.22.7 Status Read Mode 656
19.22.8 Status Polling 657
19.22.9 Programmer Mode Transition Time 657
19.22.10 Notes on Memory Programming 658
19.23 Flash Memory Programming and Erasing Precautions 658

Section 20 Clock Pulse Generator 661
20.1 Overview 661
20.1.1 Block Diagram 661
20.1.2 Register Configuration 661
20.2 Register Descriptions 662
20.2.1 System Clock Control Register (SCKCR) 662
20.3 Oscillator 663
20.3.1 Connecting a Crystal Resonator 663
20.3.2 External Clock Input 664
20.4 Duty Adjustment Circuit 665
20.5 Medium-Speed Clock Divider 665
20.6 Bus Master Clock Selection Circuit 665

Section 21 Power-Down Modes 667
21.1 Overview 667
21.1.1 Register Configuration 668
21.2 Register Descriptions 669
21.2.1 Standby Control Register (SBYCR) 669
21.2.2 System Clock Control Register (SCKCR) 670
21.2.3 Module Stop Control Register (MSTPCR) 671
21.3 Medium-Speed Mode 672
21.4 Sleep Mode 672
21.5 Module Stop Mode 673
21.5.1 Module Stop Mode 673
21.5.2 Usage Notes 674
21.6 Software Standby Mode 675
21.6.1 Software Standby Mode 675
21.6.2 Clearing Software Standby Mode 675
21.6.3 Setting Oscillation Stabilization Time after Clearing Software Standby Mode 675
21.6.4 Software Standby Mode Application Example 676
21.6.5 Usage Notes 677
21.7 Hardware Standby Mode 678
21.7.1 Hardware Standby Mode 678
21.7.2 Hardware Standby Mode Timing 678
21.8 ø Clock Output Disabling Function 679

Section 22 Electrical Characteristics 681
22.1 Electrical Characteristics of Masked ROM Version (H8S/2398) and ROMless Versions (H8S/2394, H8S/2392, and H8S/2390) 681
22.1.1 Absolute Maximum Ratings 681
22.1.2 DC Characteristics 682

22.1.3 AC Characteristics 684
22.1.4 A/D Conversion Characteristics 701
22.1.5 D/A Conversion Characteristics 702
22.2 Usage Note (Internal Voltage Step Down for the H8S/2398, H8S/2394, H8S/2392, and H8S/2390) 702
22.3 Electrical Characteristics of H8S/2398 F-ZTAT 703
22.3.1 Absolute Maximum Ratings 703
22.3.2 DC Characteristics 704
22.3.3 AC Characteristics 706
22.3.4 A/D Conversion Characteristics 723
22.3.5 D/A Conversion Characteristics 724
22.3.6 Flash Memory Characteristics 724
22.4 Notes on Use 727
22.5 Usage Note (Internal Voltage Step Down for the H8S/2398 F-ZTAT) 727
22.6 Electrical Characteristics of H8S/2357 Masked ROM and ZTAT Versions, and H8S/2352 728
22.6.1 Absolute Maximum Ratings 728
22.6.2 DC Characteristics 728
22.6.3 AC Characteristics 734
22.6.4 A/D Conversion Characteristics 753
22.6.5 D/A Convervion Characteristics 754
22.7 Electrical Characteristics of H8S/2357 F-ZTAT Version 755
22.7.1 Absolute Maximum Ratings 755
22.7.2 DC Characteristics 755
22.7.3 AC Characteristics 759
22.7.4 A/D Conversion Characteristics 764
22.7.5 D/A Conversion Characteristics 765
22.7.6 Flash Memory Characteristics 765
22.8 Usage Note 768

Appendix A Instruction Set 769
A.1 Instruction List 769
A.2 Instruction Codes 792
A.3 Operation Code Map 806
A.4 Number of States Required for Instruction Execution 810
A.5 Bus States during Instruction Execution 820
A.6 Condition Code Modification 834

Appendix B Internal I/O Register 839
B.1 Addresses 839
B.2 Functions 847

Appendix C I/O Port Block Diagrams 968
C.1 Port 1 Block Diagram 968
C.2 Port 2 Block Diagram 971
C.3 Port 3 Block Diagram 975
C.4 Port 4 Block Diagram 978
C.5 Port 5 Block Diagram 979
C.6 Port 6 Block Diagram 983
C.7 Port A Block Diagram 989
C.8 Port B Block Diagram 992
C.9 Port C Block Diagram 993
C.10 Port D Block Diagram 994
C.11 Port E Block Diagram 995

C.12 Port F Block Diagram 996
C.13 Port G Block Diagram 1004

Appendix D Pin States 1007
D.1 Port States in Each Mode 1007

Appendix E Pin States at Power-On 1011
E.1 When Pins Settle from an Indeterminate State at Power-On 1011
E.2 When Pins Settle from the High-Impedance State at Power-On 1012

Appendix F Timing of Transition to and Recovery from Hardware Standby Mode 1013
F.1 Timing of Transition to Hardware Standby Mode 1013
F.2 Timing of Recovery from Hardware Standby Mode 1013

Appendix G Product Code Lineup 1014

Appendix H Package Dimensions 1015

Section 1 Overview

1.1 Overview

The H8S/2357 Group is a series of microcomputers (MCUs: microcomputer units), built around the H8S/2000 CPU, employing Renesas proprietary architecture, and equipped with peripheral functions on-chip.

The H8S/2000 CPU has an internal 32-bit architecture, is provided with sixteen 16-bit general registers and a concise, optimized instruction set designed for high-speed operation, and can address a 16-Mbyte linear address space. The instruction set is upward-compatible with H8/300 and H8/300H CPU instructions at the object-code level, facilitating migration from the H8/300, H8/300L, or H8/300H Series.

On-chip peripheral functions required for system configuration include DMA controller (DMAC) and data transfer controller (DTC) bus masters, ROM and RAM memory, a 16-bit timer-pulse unit (TPU), programmable pulse generator (PPG), 8-bit timer, watchdog timer (WDT), serial communication interface (SCI), A/D converter, D/A converter, and I/O ports.

Single-power-supply flash memory (F-ZTAT*[1]), PROM (ZTAT*[2]), and masked ROM versions are available, providing a quick and flexible response to conditions from ramp-up through full-scale volume production, even for applications with frequently changing specifications.

The features of the H8S/2357 Group are shown in table 1-1.

Notes: 1. F-ZTAT is a trademark of Renesas Technology, Corp.
2. ZTAT is a registered trademark of Renesas Technology, Corp.

Table 1-1 Overview

Item	Specification
CPU	• General-register machine — Sixteen 16-bit general registers (also usable as sixteen 8-bit registers or eight 32-bit registers) • High-speed operation suitable for realtime control — Maximum clock rate: 20 MHz — High-speed arithmetic operations 8/16/32-bit register-register add/subtract: 50 ns 16 × 16-bit register-register multiply: 1000 ns 32 ÷ 16-bit register-register divide: 1000 ns • Instruction set suitable for high-speed operation — Sixty-five basic instructions — 8/16/32-bit move/arithmetic and logic instructions — Unsigned/signed multiply and divide instructions — Powerful bit-manipulation instructions • CPU operating modes — Advanced mode: 16-Mbyte address space
Bus controller	• Address space divided into 8 areas, with bus specifications settable independently for each area • Chip select output possible for each area • Choice of 8-bit or 16-bit access space for each area • 2-state or 3-state access space can be designated for each area • Number of program wait states can be set for each area • Burst ROM directly connectable • Maximum 8-Mbyte DRAM directly connectable (or use of interval timer possible) • External bus release function
DMA controller (DMAC)	• Choice of short address mode or full address mode • 4 channels in short address mode • 2 channels in full address mode • Transfer possible in repeat mode, block transfer mode, etc. • Single address mode transfer possible • Can be activated by internal interrupt
Data transfer controller (DTC)	• Can be activated by internal interrupt or software • Multiple transfers or multiple types of transfer possible for one activation source • Transfer possible in repeat mode, block transfer mode, etc. • Request can be sent to CPU for interrupt that activated DTC

Item	Specification
16-bit timer-pulse unit (TPU)	• 6-channel 16-bit timer on-chip • Pulse I/O processing capability for up to 16 pins • Automatic 2-phase encoder count capability
Programmable pulse generator (PPG)	• Maximum 16-bit pulse output possible with TPU as time base • Output trigger selectable in 4-bit groups • Non-overlap margin can be set • Direct output or inverse output setting possible
8-bit timer 2 channels	• 8-bit up-counter (external event count capability) • Two time constant registers • Two-channel connection possible
Watchdog timer	• Watchdog timer or interval timer selectable
Serial communication interface (SCI) 3 channels	• Asynchronous mode or synchronous mode selectable • Multiprocessor communication function • Smart card interface function
A/D converter	• Resolution: 10 bits • Input: 8 channels • High-speed conversion: 6.7 µs minimum conversion time (at 20 MHz operation) • Single or scan mode selectable • Sample and hold circuit • A/D conversion can be activated by external trigger or timer trigger
D/A converter	• Resolution: 8 bits • Output: 2 channels
I/O ports	• 87 I/O pins, 8 input-only pins
Memory	• Flash memory, PROM, Masked ROM • High-speed static RAM

Product Name	ROM	RAM
H8S/2357	128 kbytes	8 kbytes
H8S/2352	—	8 kbytes
H8S/2398	256 kbytes	8 kbytes
H8S/2394	—	32 kbytes
H8S/2392	—	8 kbytes
H8S/2390	—	4 kbytes

Item	Specification
Interrupt controller	• Nine external interrupt pins (NMI, $\overline{\text{IRQ0}}$ to $\overline{\text{IRQ7}}$) • 52 internal interrupt sources • Eight priority levels settable
Power-down state	• Medium-speed mode • Sleep mode • Module stop mode • Software standby mode • Hardware standby mode
Operating modes	• Eight MCU operating modes (H8S/2357 F-ZTAT)

Mode	CPU Operating Mode	Description	On-Chip ROM	External Data Bus Initial Value	External Data Bus Maximum Value
0	—	—	—	—	—
1					
2					
3					
4	Advanced	On-chip ROM disabled expansion mode	Disabled	16 bits	16 bits
5				8 bits	16 bits
6		On-chip ROM enabled expansion mode	Enabled	8 bits	16 bits
7		Single-chip mode		—	—
8	—	—	—	—	—
9					
10	Advanced	Boot mode	Enabled	8 bits	16 bits
11				—	—
12	—	—	—	—	—
13					
14	Advanced	User program mode	Enabled	8 bits	16 bits
15				—	—

Item	Specification
Operating modes	• Four MCU operating modes (H8S/2398 F-ZTAT, masked ROM, ROMless, and ZTAT)

Mode	CPU Operating Mode	Description	On-Chip ROM	External Data Bus Initial Value	External Data Bus Maximum Value
0	—	—	—	—	—
1					
2*[1]					
3*[1]					
4*[2]	Advanced	On-chip ROM disabled expansion mode	Disabled	16 bits	16 bits
5*[2]		On-chip ROM disabled expansion mode	Disabled	8 bits	16 bits
6		On-chip ROM enabled expansion mode	Enabled	8 bits	16 bits
7		Single-chip mode	Enabled	—	—

Notes: 1. In the H8S/2398 F-ZTAT, modes 2 and 3 indicate boot mode. For details on boot mode of the H8S/2398 F-ZTAT, refer to table 19-35 in section 19.17, On-Board Programming Modes.
In addition, for details on user program mode, refer also to tables 19-35 in section 19.17, On-Board Programming Modes.
2. In ROMless version, only modes 4 and 5 are available.

Item	Specification
Clock pulse generator	• On-chip duty correction circuit
Packages	• 120-pin plastic TQFP (TFP-120) • 128 pin plastic QFP (FP-128B)

Product lineup

	5 V version		3.3 V version	3 V version
Operating Supply Voltage	5 V ± 10%		3.0 to 5.5 V	2.7 to 5.5 V
Operating Frequency	2 to 20 MHz	10 to 20 MHz	2 to 13 MHz	2 to 10 MHz
ROMless Version	HD6412352F20 HD6412352TE20	HD6412394F20 HD6412394TE20 HD6412392F20 HD6412392TE20 HD6412390F20 HD6412390TE20	HD6412352F13 HD6412352TE13	HD6412352F10 HD6412352TE10
Masked ROM Version*[1]	HD6432357(A**)F HD6432357(A**)TE	HD6432398(A**)F HD6432398(A**)TE	HD6432357(M**)F HD6432357(M**)TE	HD6432357(K**)F HD6432357(K**)TE
F-ZTAT Version*[2]	HD64F2357F20 HD64F2357TE20	HD64F2398F20 HD64F2398TE20 HD64F2398F20T*[3] HD64F2398TE20T*[3]	HD64F2357VF13 HD64F2357VTE13	—
ZTAT Version	HD6472357F20 HD6472357TE20	—	HD6472357F13 HD6472357TE13	HD6472357F10 HD6472357TE10
Packages	FP-128B TFP-120		FP-128B TFP-120	FP-128B TFP-120

Notes: 1. In masked ROM versions, (**) is the ROM code.
2. See sections 22.3.6 and 22.7.6, Flash Memory Characteristics, for F-ZTAT version operating supply voltage and temperature range for programming/erasing.
3. For the HD64F2398F20T and HD64F2398TE20T only, the maximum number of times the flash memory can be reprogrammed is 1,000.

1.2 Block Diagram

Figure 1-1 shows an internal block diagram of the H8S/2357 Group.

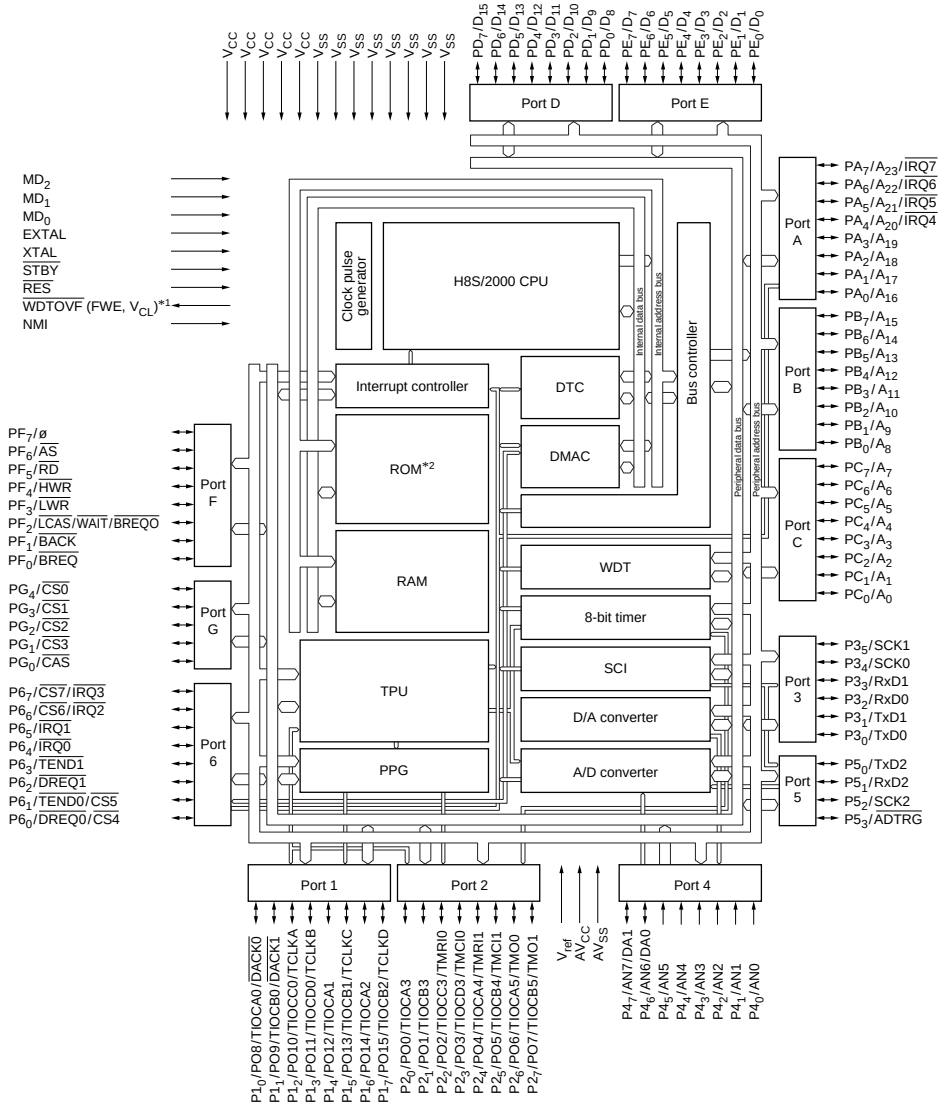

Notes: 1. This pin functions as the $\overline{\text{WDTOVF}}$ pin function in ZTAT, and masked ROM products, and in the H8S/2352. In the H8S/2357F-ZTAT, the $\overline{\text{WDTOVF}}$ pin function is not available, because this pin is used as the FWE pin.
In the H8S/2398, H8S/2394, H8S/2392, and H8S/2390, the $\overline{\text{WDTOVF}}$ pin function is not available, because this pin is used as the V_{CL} pin.
2. In ROMless version, ROM is not supported.

Figure 1-1 Block Diagram

1.3 Pin Description

1.3.1 Pin Arrangement

Figures 1-2 and 1-3 show the pin arrangement for the H8S/2357, H8S/2352 and figures 1-4 and 1-5 show the pin arrangements for the H8S/2398, H8S/2394, H8S/2392, and H8S/2390.

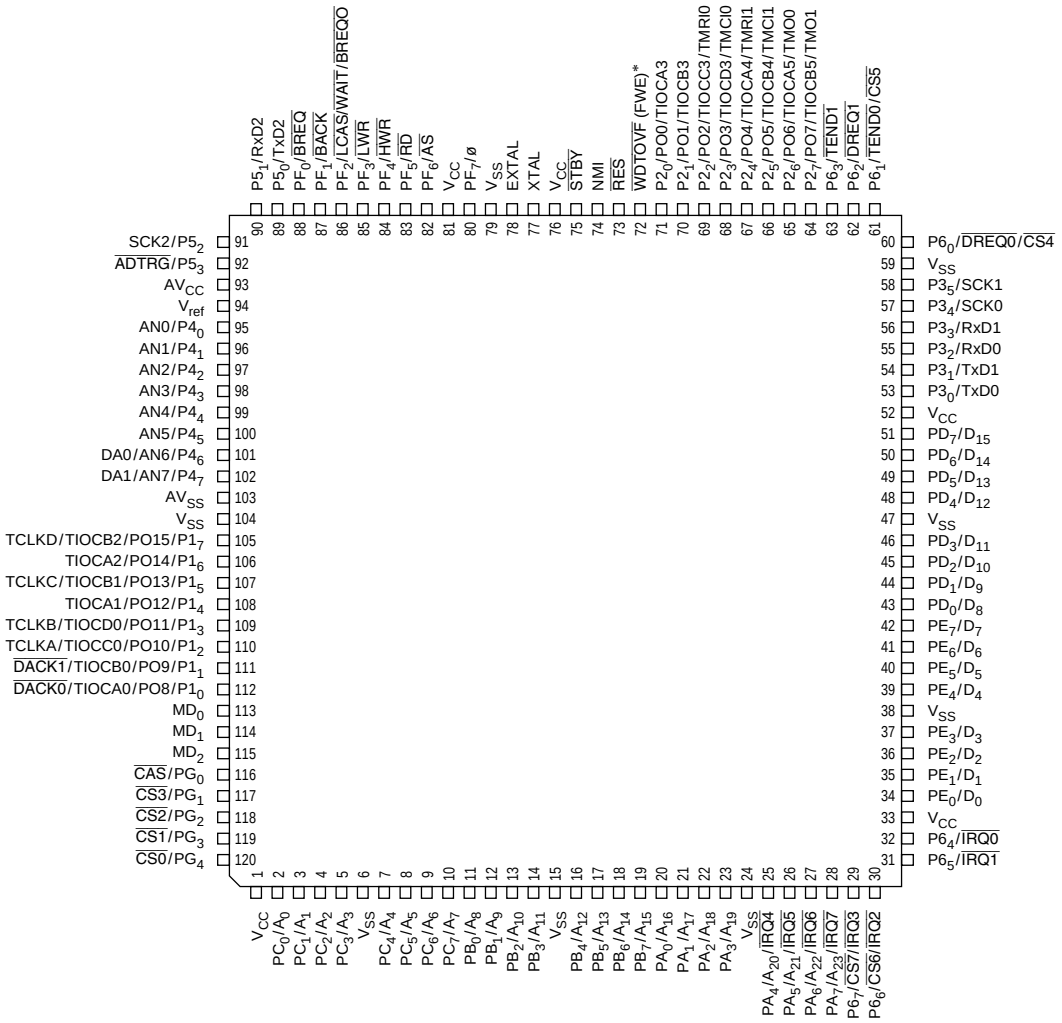

Note: * This pin has the WDTOVF pin function in the ZTAT, masked ROM, and ROMless versions. In the F-ZTAT version, the WDTOVF pin function is not available, and this pin is the FWE pin.

Figure 1-2 H8S/2357, H8S/2352 Pin Arrangement (TFP-120: Top View)

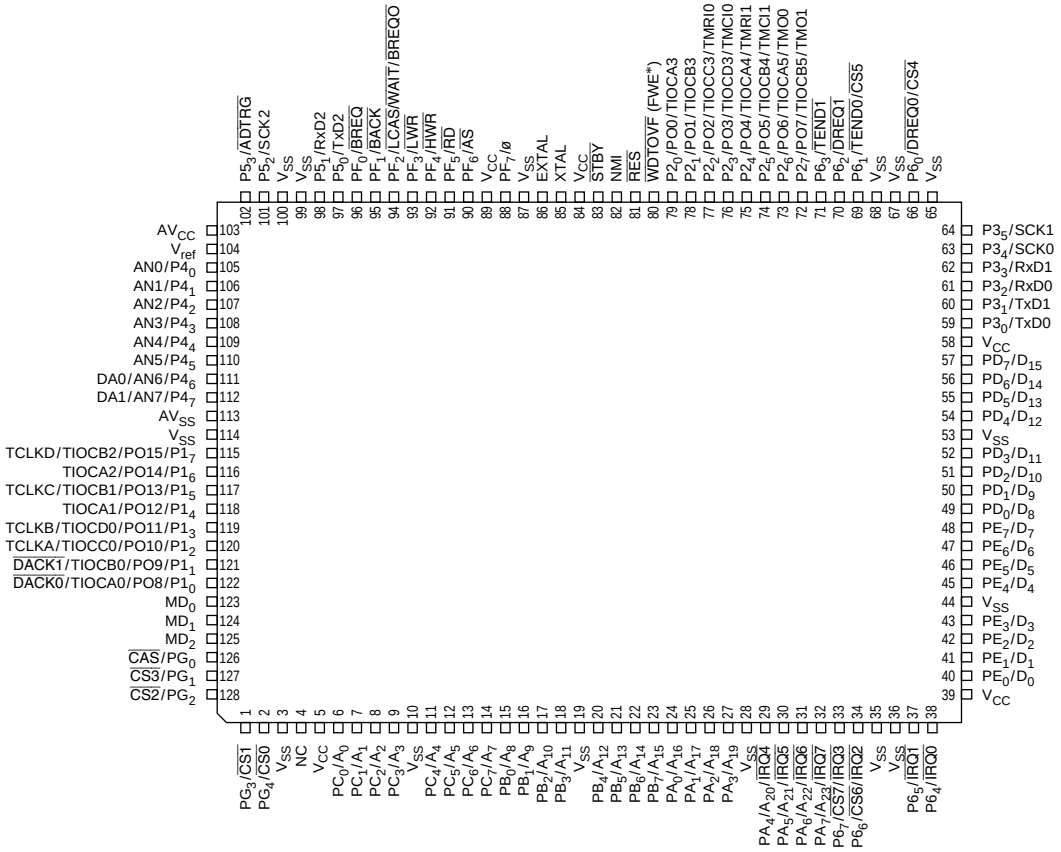

Note: * This pin has the WDTOVF pin function in the ZTAT, masked ROM, and ROMless versions.
In the F-ZTAT version, the WDTOVF pin function is not available, and this pin is the FWE pin.

Figure 1-3 H8S/2357, H8S/2352 Pin Arrangement (FP-128B: Top View)

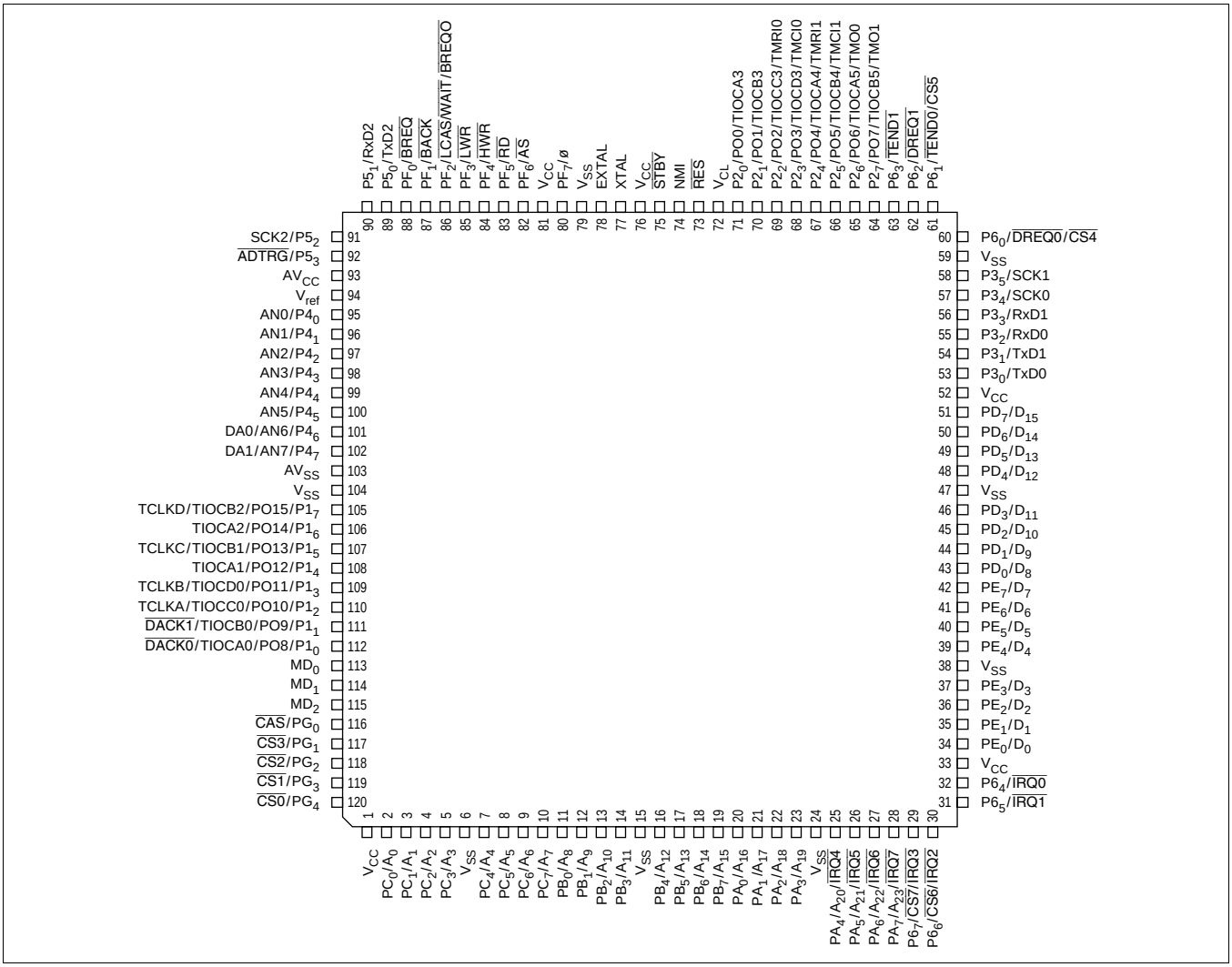

Figure 1-4 H8S/2398, H8S/2394, H8S/2392, H8S/2390 Pin Arrangement (FP-120: Top View)

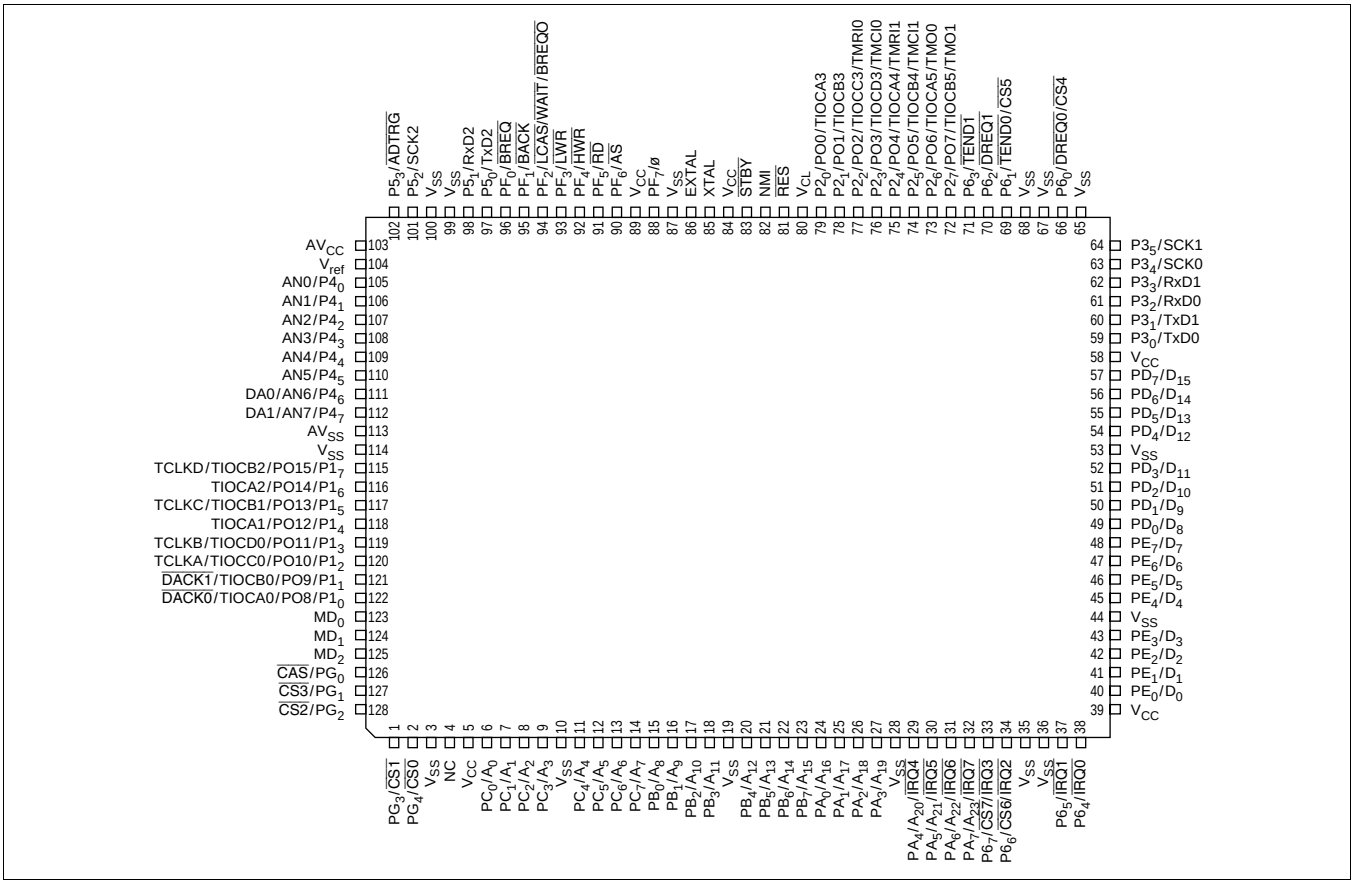

Figure 1-5 H8S/2398, H8S/2394, H8S/2392, H8S/2390 Pin Arrangement (FP-128B: Top View)

1.3.2 Pin Functions in Each Operating Mode

Table 1-2 shows the pin functions of the H8S/2357 Group in each of the operating modes.

Table 1-2 Pin Functions in Each Operating Mode

Pin No.		Pin Name					
TFP-120	FP-128B	Mode 4*[1]	Mode 5*[1]	Mode 6	Mode 7	PROM Mode	Flash Memory Programmer Mode
1	5	V_{CC}	V_{CC}	V_{CC}	V_{CC}	V_{CC}	V_{CC}
2	6	A_0	A_0	PC_0/A_0	PC_0	A_0	A0
3	7	A_1	A_1	PC_1/A_1	PC_1	A_1	A1
4	8	A_2	A_2	PC_2/A_2	PC_2	A_2	A2
5	9	A_3	A_3	PC_3/A_3	PC_3	A_3	A3
6	10	V_{SS}	V_{SS}	V_{SS}	V_{SS}	V_{SS}	V_{SS}
7	11	A_4	A_4	PC_4/A_4	PC_4	A_4	A4
8	12	A_5	A_5	PC_5/A_5	PC_5	A_5	A5
9	13	A_6	A_6	PC_6/A_6	PC_6	A_6	A6
10	14	A_7	A_7	PC_7/A_7	PC_7	A_7	A7
11	15	A_8	A_8	PB_0/A_8	PB_0	A_8	A8
12	16	A_9	A_9	PB_1/A_9	PB_1	$\overline{OE}$	NC (A9)*[3]
13	17	A_{10}	A_{10}	PB_2/A_{10}	PB_2	A_{10}	A10
14	18	A_{11}	A_{11}	PB_3/A_{11}	PB_3	A_{11}	A11
15	19	V_{SS}	V_{SS}	V_{SS}	V_{SS}	V_{SS}	V_{SS}
16	20	A_{12}	A_{12}	PB_4/A_{12}	PB_4	A_{12}	A12
17	21	A_{13}	A_{13}	PB_5/A_{13}	PB_5	A_{13}	A13
18	22	A_{14}	A_{14}	PB_6/A_{14}	PB_6	A_{14}	A14
19	23	A_{15}	A_{15}	PB_7/A_{15}	PB_7	A_{15}	A15
20	24	A_{16}	A_{16}	PA_0/A_{16}	PA_0	A_{16}	A16
21	25	A_{17}	A_{17}	PA_1/A_{17}	PA_1	V_{CC}	NC (A17)*[3]
22	26	A_{18}	A_{18}	PA_2/A_{18}	PA_2	V_{CC}	NC (A18)*[3]
23	27	A_{19}	A_{19}	PA_3/A_{19}	PA_3	NC	NC
24	28	V_{SS}	V_{SS}	V_{SS}	V_{SS}	V_{SS}	V_{SS}
25	29	A_{20}	A_{20}	$PA_4/A_{20}/\overline{IRQ4}$	$PA_4/\overline{IRQ4}$	NC	NC
26	30	$PA_5/A_{21}/\overline{IRQ5}$	$PA_5/A_{21}/\overline{IRQ5}$	$PA_5/A_{21}/\overline{IRQ5}$	$PA_5/\overline{IRQ5}$	NC	NC
27	31	$PA_6/A_{22}/\overline{IRQ6}$	$PA_6/A_{22}/\overline{IRQ6}$	$PA_6/A_{22}/\overline{IRQ6}$	$PA_6/\overline{IRQ6}$	NC	NC
28	32	$PA_7/A_{23}/\overline{IRQ7}$	$PA_7/A_{23}/\overline{IRQ7}$	$PA_7/A_{23}/\overline{IRQ7}$	$PA_7/\overline{IRQ7}$	NC	NC
29	33	$P6_7/\overline{IRQ3}/\overline{CS7}$	$P6_7/\overline{IRQ3}/\overline{CS7}$	$P6_7/\overline{IRQ3}/\overline{CS7}$	$P67/\overline{IRQ3}$	NC	NC
30	34	$P6_6/\overline{IRQ2}/\overline{CS6}$	$P6_6/\overline{IRQ2}/\overline{CS6}$	$P6_6/\overline{IRQ2}/\overline{CS6}$	$P6_6/\overline{IRQ2}$	NC	V_{CC}
—	35	V_{SS}	V_{SS}	V_{SS}	V_{SS}	V_{SS}	V_{SS}
—	36	V_{SS}	V_{SS}	V_{SS}	V_{SS}	V_{SS}	V_{SS}

Pin No.		Pin Name					
TFP-120	**FP-128B**	**Mode 4*1**	**Mode 5*1**	**Mode 6**	**Mode 7**	**PROM Mode**	**Flash Memory Programmer Mode**
31	37	$P6_5/\overline{IRQ1}$	$P6_5/\overline{IRQ1}$	$P6_5/\overline{IRQ1}$	$P6_5/\overline{IRQ1}$	NC	V_{SS}
32	38	$P6_4/\overline{IRQ0}$	$P6_4/\overline{IRQ0}$	$P6_4/\overline{IRQ0}$	$P6_4/\overline{IRQ0}$	NC	V_{SS}
33	39	V_{CC}	V_{CC}	V_{CC}	V_{CC}	V_{CC}	V_{CC}
34	40	PE_0/D_0	PE_0/D_0	PE_0/D_0	PE_0	NC	NC
35	41	PE_1/D_1	PE_1/D_1	PE_1/D_1	PE_1	NC	NC
36	42	PE_2/D_2	PE_2/D_2	PE_2/D_2	PE_2	NC	NC
37	43	PE_3/D_3	PE_3/D_3	PE_3/D_3	PE_3	NC	NC
38	44	V_{SS}	V_{SS}	V_{SS}	V_{SS}	V_{SS}	V_{SS}
39	45	PE_4/D_4	PE_4/D_4	PE_4/D_4	PE_4	NC	NC
40	46	PE_5/D_5	PE_5/D_5	PE_5/D_5	PE_5	NC	NC
41	47	PE_6/D_6	PE_6/D_6	PE_6/D_6	PE_6	NC	NC
42	48	PE_7/D_7	PE_7/D_7	PE_7/D_7	PE_7	NC	NC
43	49	D_8	D_8	D_8	PD_0	D_0	I/O0
44	50	D_9	D_9	D_9	PD_1	D_1	I/O1
45	51	D_{10}	D_{10}	D_{10}	PD_2	D_2	I/O2
46	52	D_{11}	D_{11}	D_{11}	PD_3	D_3	I/O3
47	53	V_{SS}	V_{SS}	V_{SS}	V_{SS}	V_{SS}	V_{SS}
48	54	D_{12}	D_{12}	D_{12}	PD_4	D_4	I/O4
49	55	D_{13}	D_{13}	D_{13}	PD_5	D_5	I/O5
50	56	D_{14}	D_{14}	D_{14}	PD_6	D_6	I/O6
51	57	D_{15}	D_{15}	D_{15}	PD_7	D_7	I/O7
52	58	V_{CC}	V_{CC}	V_{CC}	V_{CC}	V_{CC}	V_{CC}
53	59	$P3_0$/TxD0	$P3_0$/TxD0	$P3_0$/TxD0	$P3_0$/TxD0	NC	NC
54	60	$P3_1$/TxD1	$P3_1$/TxD1	$P3_1$/TxD1	$P3_1$/TxD1	NC	NC
55	61	$P3_2$/RxD0	$P3_2$/RxD0	$P3_2$/RxD0	$P3_2$/RxD0	NC	NC (V_{CC})*3
56	62	$P3_3$/RxD1	$P3_3$/RxD1	$P3_3$/RxD1	$P3_3$/RxD1	NC	NC
57	63	$P3_4$/SCK0	$P3_4$/SCK0	$P3_4$/SCK0	$P3_4$/SCK0	NC	NC
58	64	$P3_5$/SCK1	$P3_5$/SCK1	$P3_5$/SCK1	$P3_5$/SCK1	NC	NC
59	65	V_{SS}	V_{SS}	V_{SS}	V_{SS}	V_{SS}	V_{SS}
60	66	$P6_0/\overline{DREQ0}/\overline{CS4}$	$P6_0/\overline{DREQ0}/\overline{CS4}$	$P6_0/\overline{DREQ0}/\overline{CS4}$	$P6_0/\overline{DREQ0}$	NC	NC
—	67	V_{SS}	V_{SS}	V_{SS}	V_{SS}	V_{SS}	V_{SS}
—	68	V_{SS}	V_{SS}	V_{SS}	V_{SS}	V_{SS}	V_{SS}
61	69	$P6_1/\overline{TEND0}/\overline{CS5}$	$P6_1/\overline{TEND0}/\overline{CS5}$	$P6_1/\overline{TEND0}/\overline{CS5}$	$P6_1/\overline{TEND0}$	NC	NC
62	70	$P6_2/\overline{DREQ1}$	$P6_2/\overline{DREQ1}$	$P6_2/\overline{DREQ1}$	$P6_2/\overline{DREQ1}$	NC	NC
63	71	$P6_3/\overline{TEND1}$	$P6_3/\overline{TEND1}$	$P6_3/\overline{TEND1}$	$P6_3/\overline{TEND1}$	NC	NC
64	72	$P2_7$/PO7/ TIOCB5/ TMO_1	$P2_7$/PO7/ TIOCB5/ TMO_1	$P2_7$/PO7/ TIOCB5/ TMO_1	$P2_7$/PO7/ TIOCB5/ TMO_1	NC	NC
65	73	$P2_6$/PO6/ TIOCA5/ TMO_0	$P2_6$/PO6/ TIOCA5/ TMO_0	$P2_6$/PO6/ TIOCA5/ TMO_0	$P2_6$/PO6/ TIOCA5/ TMO_0	NC	NC

Pin No.		Pin Name					
TFP-120	**FP-128B**	**Mode 4*1**	**Mode 5*1**	**Mode 6**	**Mode 7**	**PROM Mode**	**Flash Memory Programmer Mode**
66	74	$P2_5$/PO5/ TIOCB4/ $TMCI_1$	$P2_5$/PO5/ TIOCB4/ $TMCI_1$	$P2_5$/PO5/ TIOCB4/ $TMCI_1$	$P2_5$/PO5/ TIOCB4/ $TMCI_1$	NC	V_{CC} (V_{SS})*3
67	75	$P2_4$/PO4/ TIOCA4/ $TMRI_1$	$P2_4$/PO4/ TIOCA4/ $TMRI_1$	$P2_4$/PO4/ TIOCA4/ $TMRI_1$	$P2_4$/PO4/ TIOCA4/ $TMRI_1$	NC	$\overline{WE}$
68	76	$P2_3$/PO3/ TIOCD3/ $TMCI_0$	$P2_3$/PO3/ TIOCD3/ $TMCI_0$	$P2_3$/PO3/ TIOCD3/ $TMCI_0$	$P2_3$/PO3/ TIOCD3/ $TMCI_0$	NC	$\overline{CE}$
69	77	$P2_2$/PO2/ TIOCC3/ $TMRI_0$	$P2_2$/PO2/ TIOCC3/ $TMRI_0$	$P2_2$/PO2/ TIOCC3/ $TMRI_0$	$P2_2$/PO2/ TIOCC3/ $TMRI_0$	NC	$\overline{OE}$
70	78	$P2_1$/PO1/ TIOCB3	$P2_1$/PO1/ TIOCB3	$P2_1$/PO1/ TIOCB3	$P2_1$/PO1/ TIOCB3	NC	NC
71	79	$P2_0$/PO0/ TIOCA3	$P2_0$/PO0/ TIOCA3	$P2_0$/PO0/ TIOCA3	$P2_0$/PO0/ TIOCA3	NC	NC
72	80	$\overline{WDTOVF}$ (FWE)*2 (V_{CL})*2	$\overline{WDTOVF}$ (FWE)*2 (V_{CL})*2	$\overline{WDTOVF}$ (FWE)*2 (V_{CL})*2	$\overline{WDTOVF}$ (FWE)*2 (V_{CL})*2	NC	FWE (V_{CL})*2
73	81	$\overline{RES}$	$\overline{RES}$	$\overline{RES}$	$\overline{RES}$	V_{PP}	$\overline{RES}$
74	82	NMI	NMI	NMI	NMI	A_9	A9 (V_{CC})*3
75	83	$\overline{STBY}$	$\overline{STBY}$	$\overline{STBY}$	$\overline{STBY}$	V_{SS}	V_{CC}
76	84	V_{CC}	V_{CC}	V_{CC}	V_{CC}	V_{CC}	V_{CC}
77	85	XTAL	XTAL	XTAL	XTAL	NC	XTAL
78	86	EXTAL	EXTAL	EXTAL	EXTAL	NC	EXTAL
79	87	V_{SS}	V_{SS}	V_{SS}	V_{SS}	V_{SS}	V_{SS}
80	88	PF_7/ø	PF_7/ø	PF_7/ø	PF_7/ø	NC	NC
81	89	V_{CC}	V_{CC}	V_{CC}	V_{CC}	V_{CC}	V_{CC}
82	90	$\overline{AS}$	$\overline{AS}$	$\overline{AS}$	PF_6	NC	NC
83	91	$\overline{RD}$	$\overline{RD}$	$\overline{RD}$	PF_5	NC	NC
84	92	$\overline{HWR}$	$\overline{HWR}$	$\overline{HWR}$	PF_4	NC	NC
85	93	$\overline{LWR}$	$\overline{LWR}$	$\overline{LWR}$	PF_3	NC	NC
86	94	PF_2/$\overline{LCAS}$/ $\overline{WAIT}$/ $\overline{BREQO}$	PF_2/$\overline{LCAS}$/ $\overline{WAIT}$/ $\overline{BREQO}$	PF_2/$\overline{LCAS}$/ $\overline{WAIT}$/ $\overline{BREQO}$	PF_2	$\overline{CE}$	NC
87	95	PF_1/$\overline{BACK}$	PF_1/$\overline{BACK}$	PF_1/$\overline{BACK}$	PF_1	$\overline{PGM}$	NC
88	96	PF_0/$\overline{BREQ}$	PF_0/$\overline{BREQ}$	PF_0/$\overline{BREQ}$	PF_0	NC	NC
89	97	$P5_0$/TxD_2	$P5_0$/TxD_2	$P5_0$/TxD_2	$P5_0$/TxD_2	NC	NC
90	98	$P5_1$/RxD_2	$P5_1$/RxD_2	$P5_1$/RxD_2	$P5_1$/RxD_2	NC	V_{CC} (NC)*3
—	99	V_{SS}	V_{SS}	V_{SS}	V_{SS}	V_{SS}	V_{SS}
—	100	V_{SS}	V_{SS}	V_{SS}	V_{SS}	V_{SS}	V_{SS}
91	101	$P5_2$/SCK2	$P5_2$/SCK2	$P5_2$/SCK2	$P5_2$/SCK2	NC	NC
92	102	$P5_3$/$\overline{ADTRG}$	$P5_3$/$\overline{ADTRG}$	$P5_3$/$\overline{ADTRG}$	$P5_3$/$\overline{ADTRG}$	NC	NC
93	103	AV_{CC}	AV_{CC}	AV_{CC}	AV_{CC}	V_{CC}	V_{CC}
94	104	V_{ref}	V_{ref}	V_{ref}	V_{ref}	V_{CC}	V_{CC}
95	105	$P4_0$/AN0	$P4_0$/AN0	$P4_0$/AN0	$P4_0$/AN0	NC	NC
96	106	$P4_1$/AN1	$P4_1$/AN1	$P4_1$/AN1	$P4_1$/AN1	NC	NC

Pin No.		Pin Name					
TFP-120	**FP-128B**	**Mode 4*1**	**Mode 5*1**	**Mode 6**	**Mode 7**	**PROM Mode**	**Flash Memory Programmer Mode**
97	107	$P4_2$/AN2	$P4_2$/AN2	$P4_2$/AN2	$P4_2$/AN2	NC	NC
98	108	$P4_3$/AN3	$P4_3$/AN3	$P4_3$/AN3	$P4_3$/AN3	NC	NC
99	109	$P4_4$/AN4	$P4_4$/AN4	$P4_4$/AN4	$P4_4$/AN4	NC	NC
100	110	$P4_5$/AN5	$P4_5$/AN5	$P4_5$/AN5	$P4_5$/AN5	NC	NC
101	111	$P4_6$/AN6/ DA0	$P4_6$/AN6/ DA0	$P4_6$/AN6/ DA0	$P4_6$/AN6/ DA0	NC	NC
102	112	$P4_7$/AN7/ DA1	$P4_7$/AN7/ DA1	$P4_7$/AN7/ DA1	$P4_7$/AN7/ DA1	NC	NC
103	113	AV_{SS}	AV_{SS}	AV_{SS}	AV_{SS}	V_{SS}	V_{SS}
104	114	V_{SS}	V_{SS}	V_{SS}	V_{SS}	V_{SS}	V_{SS}
105	115	$P1_7$/PO15/ TIOCB2/ TCLKD	$P1_7$/PO15/ TIOCB2/ TCLKD	$P1_7$/PO15/ TIOCB2/ TCLKD	$P1_7$/PO15/ TIOCB2/ TCLKD	NC	NC
106	116	$P1_6$/PO14/ TIOCA2	$P1_6$/PO14/ TIOCA2	$P1_6$/PO14/ TIOCA2	$P1_6$/PO14/ TIOCA2	NC	NC
107	117	$P1_5$/PO13/ TIOCB1/ TCLKC	$P1_5$/PO13/ TIOCB1/ TCLKC	$P1_5$/PO13/ TIOCB1/ TCLKC	$P1_5$/PO13/ TIOCB1/ TCLKC	NC	NC
108	118	$P1_4$/PO12/ TIOCA1	$P1_4$/PO12/ TIOCA1	$P1_4$/PO12/ TIOCA1	$P1_4$/PO12/ TIOCA1	NC	NC
109	119	$P1_3$/PO11/ TIOCD0/ TCLKB	$P1_3$/PO11/ TIOCD0/ TCLKB	$P1_3$/PO11/ TIOCD0/ TCLKB	$P1_3$/PO11/ TIOCD0/ TCLKB	NC	NC
110	120	$P1_2$/PO10/ TIOCC0/ TCLKA	$P1_2$/PO10/ TIOCC0/ TCLKA	$P1_2$/PO10/ TIOCC0/ TCLKA	$P1_2$/PO10/ TIOCC0/ TCLKA	NC	NC
111	121	$P1_1$/PO9/ TIOCB0/ $\overline{DACK1}$	$P1_1$/PO9/ TIOCB0/ $\overline{DACK1}$	$P1_1$/PO9/ TIOCB0/ $\overline{DACK1}$	$P1_1$/PO9/ TIOCB0/ $\overline{DACK1}$	NC	NC
112	122	$P1_0$/PO8/ TIOCA0/ $\overline{DACK0}$	$P1_0$/PO8/ TIOCA0/ $\overline{DACK0}$	$P1_0$/PO8/ TIOCA0/ $\overline{DACK0}$	$P1_0$/PO8/ TIOCA0/ $\overline{DACK0}$	NC	NC
113	123	MD_0	MD_0	MD_0	MD_0	V_{SS}	V_{SS}
114	124	MD_1	MD_1	MD_1	MD_1	V_{SS}	V_{SS}
115	125	MD_2	MD_2	MD_2	MD_2	V_{SS}	V_{SS}
116	126	$PG_0/\overline{CAS}$	$PG_0/\overline{CAS}$	$PG_0/\overline{CAS}$	PG_0	NC	NC
117	127	$PG_1/\overline{CS3}$	$PG_1/\overline{CS3}$	$PG_1/\overline{CS3}$	PG_1	NC	NC
118	128	$PG_2/\overline{CS2}$	$PG_2/\overline{CS2}$	$PG_2/\overline{CS2}$	PG_2	NC	NC
119	1	$PG_3/\overline{CS1}$	$PG_3/\overline{CS1}$	$PG_3/\overline{CS1}$	PG_3	NC	NC
120	2	$PG_4/\overline{CS0}$	$PG_4/\overline{CS0}$	$PG_4/\overline{CS0}$	PG_4	NC	NC
—	3	V_{SS}	V_{SS}	V_{SS}	V_{SS}	V_{SS}	V_{SS}
—	4	NC	NC	NC	NC	NC	NC

Notes: NC pins should be connected to V_{SS} or left open.

1. In ROMless version, only modes 4 and 5 are available.
2. This pin functions as the $\overline{WDTOVF}$ pin function in ZTAT, and masked ROM products, and in the H8S/2352. In the H8S/2357F-ZTAT, the $\overline{WDTOVF}$ pin function is not available, because this pin is used as the FWE pin. In the H8S/2398, H8S/2394, H8S/2392, and H8S/2390, the $\overline{WDTOVF}$ pin function is not available, because this pin is used as the V_{CL} pin.
3. The pin names in parentheses are available other than the H8S/2357 F-ZTAT.

1.3.3 Pin Functions

Table 1-3 outlines the pin functions of the H8S/2357 Group.

Table 1-3 Pin Functions

Type	Symbol	Pin No. TFP-120	Pin No. FP-128B	I/O	Name and Function
Power	V_{CC}	81, 76, 52, 33, 1	89, 84, 58, 39, 5,	Input	**Power supply:** For connection to the power supply. All V_{CC} pins should be connected to the system power supply.
	V_{SS}	104, 79, 59, 47, 38, 24, 15, 6,	114, 100, 99, 87, 68, 67, 65, 53, 44, 36, 35, 28, 19, 10, 3	Input	**Ground:** For connection to ground (0 V). All V_{SS} pins should be connected to the system power supply (0 V).
Internal voltage step-down drop pin	V_{CL}*1	72	80	INPUT	Connects an external capacitor between this pin and the ground pin (0 V). This pin should never be connected to V_{CC}.
Clock	XTAL	77	85	Input	Connects to a crystal oscillator. See section 20, Clock Pulse Generator, for typical connection diagrams for a crystal oscillator and external clock input.
	EXTAL	78	86	Input	Connects to a crystal oscillator. The EXTAL pin can also input an external clock. See section 20, Clock Pulse Generator, for typical connection diagrams for a crystal oscillator and external clock input.
	ø	80	88	Output	**System clock:** Supplies the system clock to an external device.

Type	Symbol	Pin No. TFP-120	Pin No. FP-128B	I/O	Name and Function
Operating mode control	MD_2 to MD_0	115 to 113	125 to 123	Input	**Mode pins:** These pins set the operating mode. The relation between the settings of pins MD_2 to MD_0 and the operating mode is shown below. These pins should not be changed while the H8S/2357 Group is operating.

MD_2	MD_1	MD_0	Operating Mode
0	0	0	—
		1	—
	1	0	—
		1	—
1	0	0	Mode 4*
		1	Mode 5*
	1	0	Mode 6
		1	Mode 7

Note: * In ROMless version, only modes 4 and 5 are available.

Type	Symbol	TFP-120	FP-128B	I/O	Name and Function
System control	$\overline{RES}$	73	81	Input	**Reset input:** When this pin is driven low, the chip is reset. The type of reset can be selected according to the NMI input level. At power-on, the NMI pin input level should be set high.
	$\overline{STBY}$	75	83	Input	**Standby:** When this pin is driven low, a transition is made to hardware standby mode.
	$\overline{BREQ}$	88	96	Input	**Bus request:** Used by an external bus master to issue a bus request to the H8S/2357 Group.
	$\overline{BREQO}$	86	94	Output	**Bus request output:** The external bus request signal used when an internal bus master accesses external space in the external bus-released state.
	$\overline{BACK}$	87	95	Output	**Bus request acknowledge:** Indicates that the bus has been released to an external bus master.
	FWE*[2]	72	80	Input	**Flash write enable:** Enables/disables flash memory programming.
Interrupts	NMI	74	82	Input	**Nonmaskable interrupt:** Requests a nonmaskable interrupt. When this pin is not used, it should be fixed high.
	$\overline{IRQ7}$ to $\overline{IRQ0}$	32 to 29, 28 to 25	38, 37, 34, 33, 32 to 29	Input	**Interrupt request 7 to 0:** These pins request a maskable interrupt.

Type	Symbol	Pin No. TFP-120	Pin No. FP-128B	I/O	Name and Function
Address bus	A_{23} to A_0	28 to 25, 23 to 16, 14 to 7, 5 to 2	32 to 29, 27 to 20, 18 to 11, 9 to 6	Output	**Address bus:** These pins output an address.
Data bus	D_{15} to D_0	51 to 48, 46 to 39, 37 to 34	57 to 54, 52 to 45, 43 to 40	I/O	**Data bus:** These pins constitute a bidirectional data bus.
Bus control	$\overline{CS7}$ to $\overline{CS0}$	120 to 117 61, 60, 30, 29	128, 127, 69, 66, 34, 33, 2, 1	Output	**Chip select:** Signals for selecting areas 7 to 0.
	$\overline{AS}$	82	90	Output	**Address strobe:** When this pin is low, it indicates that address output on the address bus is enabled.
	$\overline{RD}$	83	91	Output	**Read:** When this pin is low, it indicates that the external address space can be read.
	$\overline{HWR}$	84	92	Output	**High write/write enable:** A strobe signal that writes to external space and indicates that the upper half (D_{15} to D_8) of the data bus is enabled. The 2CAS type DRAM write enable signal.
	$\overline{LWR}$	85	93	Output	**Low write:** A strobe signal that writes to external space and indicates that the lower half (D_7 to D_0) of the data bus is enabled.
	$\overline{CAS}$	116	126	Output	**Upper column address strobe/column address strobe:** The 2CAS type DRAM upper column address strobe signal.
	$\overline{WAIT}$	86	94	Input	**Wait:** Requests insertion of a wait state in the bus cycle when accessing external 3-state address space.
	$\overline{LCAS}$	86	94	Output	**Lower column address strobe:** The 2-CAS type DRAM lower column address strobe signal
DMA controller (DMAC)	$\overline{DREQ1}$, $\overline{DREQ0}$	62, 60	70, 66	Input	**DMA request 1 and 0:** These pins request DMAC activation.
	$\overline{TEND1}$, $\overline{TEND0}$	63, 61	71, 69	Output	**DMA transfer end 1 and 0:** These pins indicate the end of DMAC data transfer.
	$\overline{DACK1}$, $\overline{DACK0}$	112, 111	122, 121	Output	**DMA transfer acknowledge 1 and 0:** These are the DMAC single address transfer acknowledge pins.

Type	Symbol	Pin No. TFP-120	Pin No. FP-128B	I/O	Name and Function
16-bit timer-pulse unit (TPU)	TCLKD to TCLKA	110, 109, 107, 105	120, 119, 117, 115	Input	**Clock input D to A:** These pins input an external clock.
	TIOCA0, TIOCB0, TIOCC0, TIOCD0	112 to 109	122 to 119	I/O	**Input capture/ output compare match A0 to D0:** The TGR0A to TGR0D input capture input or output compare output, or PWM output pins.
	TIOCA1, TIOCB1	108, 107	118, 117	I/O	**Input capture/ output compare match A1 and B1:** The TGR1A and TGR1B input capture input or output compare output, or PWM output pins.
	TIOCA2, TIOCB2	106, 105	116, 115	I/O	**Input capture/ output compare match A2 and B2:** The TGR2A and TGR2B input capture input or output compare output, or PWM output pins.
	TIOCA3, TIOCB3, TIOCC3, TIOCD3	71 to 68	79 to 76	I/O	**Input capture/ output compare match A3 to D3:** The TGR3A to TGR3D input capture input or output compare output, or PWM output pins.
	TIOCA4, TIOCB4	67, 66	75, 74	I/O	**Input capture/ output compare match A4 and B4:** The TGR4A and TGR4B input capture input or output compare output, or PWM output pins.
	TIOCA5, TIOCB5	65, 64	73, 72	I/O	**Input capture/ output compare match A5 and B5:** The TGR5A and TGR5B input capture input or output compare output, or PWM output pins.
Programmable pulse generator (PPG)	PO15 to PO0	112 to 105, 71 to 64	122 to 115, 79 to 72	Output	**Pulse output 15 to 0:** Pulse output pins.
8-bit timer	TMO0, TMO1	65, 64	73, 72	Output	**Compare match output:** The compare match output pins.
	TMCI0, TMCI1	68, 66	76, 74	Input	**Counter external clock input:** Input pins for the external clock input to the counter.
	TMRI0, TMRI1	69, 67	77, 75	Input	**Counter external reset input:** The counter reset input pins.
Watchdog timer (WDT)	$\overline{\text{WDTOVF}}$*3	72	80	Output	**Watchdog timer overflows:** The counter overflows signal output pin in watchdog timer mode.
Serial communication interface (SCI) and Smart Card interface	TxD2, TxD1, TxD0	89, 54, 53	97, 60, 59	Output	**Transmit data (channel 0, 1, 2):** Data output pins.
	RxD2, RxD1, RxD0	90, 56, 55	98, 62, 61	Input	**Receive data (channel 0, 1, 2):** Data input pins.
	SCK2, SCK1, SCK0	91, 58, 57	101, 64, 63	I/O	**Serial clock (channel 0, 1, 2):** Clock I/O pins.

Type	Symbol	Pin No. TFP-120	Pin No. FP-128B	I/O	Name and Function
A/D converter	AN7 to AN0	102 to 95	112 to 105	Input	**Analog 7 to 0:** Analog input pins.
	$\overline{\text{ADTRG}}$	92	102	Input	**A/D conversion external trigger input:** Pin for input of an external trigger to start A/D conversion.
D/A converter	DA1, DA0	102, 101	112, 111	Output	**Analog output:** D/A converter analog output pins.
A/D converter and D/A converter	AV_{CC}	93	103	Input	This is the power supply pin for the A/D converter and D/A converter. When the A/D converter and D/A converter are not used, this pin should be connected to the system power supply (+5 V).
	AV_{SS}	103	113	Input	This is the ground pin for the A/D converter and D/A converter. This pin should be connected to the system power supply (0 V).
	V_{ref}	94	104	Input	This is the reference voltage input pin for the A/D converter and D/A converter. When the A/D converter and D/A converter are not used, this pin should be connected to the system power supply (+5 V).
I/O ports	$P1_7$ to $P1_0$	112 to 105	122 to 115	I/O	**Port 1:** An 8-bit I/O port. Input or output can be designated for each bit by means of the port 1 data direction register (P1DDR).
	$P2_7$ to $P2_0$	71 to 64	79 to 72	I/O	**Port 2:** An 8-bit I/O port. Input or output can be designated for each bit by means of the port 2 data direction register (P2DDR).
	$P3_5$ to $P3_0$	58 to 53	64 to 59	I/O	**Port 3:** A 6-bit I/O port. Input or output can be designated for each bit by means of the port 3 data direction register (P3DDR).
	$P4_7$ to $P4_0$	102 to 95	112 to 105	Input	**Port 4:** An 8-bit input port.
	$P5_3$ to $P5_0$	92 to 89	102, 101, 98, 97	I/O	**Port 5:** A 4-bit I/O port. Input or output can be designated for each bit by means of the port 5 data direction register (P5DDR).
	$P6_7$ to $P6_0$	63 to 60, 32 to 29	71 to 69, 66, 38, 37, 34, 33	I/O	**Port 6:** An 8-bit I/O port. Input or output can be designated for each bit by means of the port 6 data direction register (P6DDR).
	PA_7 to PA_0	28 to 25, 23 to 20	32 to 29, 27 to 24	I/O	**Port A:** An 8-bit I/O port. Input or output can be designated for each bit by means of the port A data direction register (PADDR).

Type	Symbol	Pin No. TFP-120	Pin No. FP-128B	I/O	Name and Function
I/O ports	PB_7 to PB_0	19 to 16, 14 to 11	23 to 20, 18 to 15	I/O	**Port B*[4]:** An 8-bit I/O port. Input or output can be designated for each bit by means of the port B data direction register (PBDDR).
	PC_7 to PC_0	10 to 7, 5 to 2	14 to 11, 9 to 6	I/O	**Port C*[4]:** An 8-bit I/O port. Input or output can be designated for each bit by means of the port C data direction register (PCDDR).
	PD_7 to PD_0	51 to 48, 46 to 43	57 to 54, 52 to 49	I/O	**Port D*[4]:** An 8-bit I/O port. Input or output can be designated for each bit by means of the port D data direction register (PDDDR).
	PE_7 to PE_0	42 to 39, 37 to 34	48 to 45, 43 to 40	I/O	**Port E:** An 8-bit I/O port. Input or output can be designated for each bit by means of the port E data direction register (PEDDR).
	PF_7 to PF_0	88 to 82, 80	96 to 90, 88	I/O	**Port F:** An 8-bit I/O port. Input or output can be designated for each bit by means of the port F data direction register (PFDDR).
	PG_4 to PG_0	120 to 116	128 to 126, 2, 1	I/O	**Port G:** A 5-bit I/O port. Input or output can be designated for each bit by means of the port G data direction register (PGDDR).

Notes: 1. Applies to the H8S/2398, H8S/2394, H8S/2392, and H8S/2390 only.
2. Applies to the H8S/2357F-ZTAT only.
3. Not available in the F-ZTAT version, H8S/2398, H8S/2394, H8S/2392, H8S/2390.
4. Applies to the on-chip ROM version only.

Section 2 CPU

2.1 Overview

The H8S/2000 CPU is a high-speed central processing unit with an internal 32-bit architecture that is upward-compatible with the H8/300 and H8/300H CPUs. The H8S/2000 CPU has sixteen 16-bit general registers, can address a 16-Mbyte (architecturally 4-Gbyte) linear address space, and is ideal for realtime control.

2.1.1 Features

The H8S/2000 CPU has the following features.

- Upward-compatible with H8/300 and H8/300H CPUs
  - Can execute H8/300 and H8/300H object programs
- General-register architecture
  - Sixteen 16-bit general registers (also usable as sixteen 8-bit registers or eight 32-bit registers)
- Sixty-five basic instructions
  - 8/16/32-bit arithmetic and logic instructions
  - Multiply and divide instructions
  - Powerful bit-manipulation instructions
- Eight addressing modes
  - Register direct [Rn]
  - Register indirect [@ERn]
  - Register indirect with displacement [@(d:16,ERn) or @(d:32,ERn)]
  - Register indirect with post-increment or pre-decrement [@ERn+ or @–ERn]
  - Absolute address [@aa:8, @aa:16, @aa:24, or @aa:32]
  - Immediate [#xx:8, #xx:16, or #xx:32]
  - Program-counter relative [@(d:8,PC) or @(d:16,PC)]
  - Memory indirect [@@aa:8]
- 16-Mbyte address space
  - Program: 16 Mbytes
  - Data: 16 Mbytes (architecturally 4-Gbyte)
- High-speed operation
  - All frequently-used instructions execute in one or two states
  - Maximum clock rate : 20 MHz
  - 8/16/32-bit register-register add/subtract : 50 ns
  - 8 × 8-bit register-register multiply : 600 ns
  - 16 ÷ 8-bit register-register divide : 600 ns
  - 16 × 16-bit register-register multiply : 1000 ns
  - 32 ÷ 16-bit register-register divide : 1000 ns
- CPU operating mode
  - Advanced mode

- Power-down state
  — Transition to power-down state by SLEEP instruction
  — CPU clock speed selection

2.1.2 Differences between H8S/2600 CPU and H8S/2000 CPU

The differences between the H8S/2600 CPU and the H8S/2000 CPU are as shown below.

- Register configuration
  The MAC register is supported only by the H8S/2600 CPU.

- Basic instructions
  The four instructions MAC, CLRMAC, LDMAC, and STMAC are supported only by the H8S/2600 CPU.

- Number of execution states
  The number of exection states of the MULXU and MULXS instructions.

		Internal Operation	
Instruction	**Mnemonic**	**H8S/2600**	**H8S/2000**
MULXU	MULXU.B Rs, Rd	3	12
	MULXU.W Rs, ERd	4	20
MULXS	MULXS.B Rs, Rd	4	13
	MULXS.W Rs, ERd	5	21

There are also differences in the address space, CCR and EXR functions, power-down state, etc., depending on the product.

2.1.3 Differences from H8/300 CPU

In comparison to the H8/300 CPU, the H8S/2000 CPU has the following enhancements.

- More general registers and control registers
  — Eight 16-bit expanded registers, and one 8-bit control register, have been added.

- Expanded address space
  — Advanced mode supports a maximum 16-Mbyte address space.

- Enhanced addressing
  — The addressing modes have been enhanced to make effective use of the 16-Mbyte address space.

- Enhanced instructions
  — Addressing modes of bit-manipulation instructions have been enhanced.
  — Signed multiply and divide instructions have been added.
  — 2-bit shift instructions have been added.
  — Instructions for saving and restoring multiple registers have been added.
  — A test and set instruction has been added.

- Higher speed
  — Basic instructions execute twice as fast.

2.1.4 Differences from H8/300H CPU

In comparison to the H8/300H CPU, the H8S/2000 CPU has the following enhancements.

- Additional control register
  — One 8-bit control register has been added.
- Enhanced instructions
  — Addressing modes of bit-manipulation instructions have been enhanced.
  — Two-bit shift instructions have been added.
  — Instructions for saving and restoring multiple registers have been added.
  — A test and set instruction has been added.
- Higher speed
  — Basic instructions execute twice as fast.

2.2 CPU Operating Modes

The H8S/2357 Group CPU has advanced operating mode. Advanced mode supports a maximum 16-Mbyte total address space (architecturally a maximum 16-Mbyte program area and a maximum of 4 Gbytes for program and data areas combined). The mode is selected by the mode pins of the microcontroller.

2.2.1 Advanced Mode

Address Space: Linear access is provided to a 16-Mbyte maximum address space (architecturally a maximum 16-Mbyte program area and a maximum 4-Gbyte data area, with a maximum of 4 Gbytes for program and data areas combined).

Extended Registers (En): The extended registers (E0 to E7) can be used as 16-bit registers, or as the upper 16-bit segments of 32-bit registers or address registers.

Instruction Set: All instructions and addressing modes can be used.

Exception Vector Table and Memory Indirect Branch Addresses: In advanced mode the top area starting at H'00000000 is allocated to the exception vector table in units of 32 bits. In each 32 bits, the upper 8 bits are ignored and a branch address is stored in the lower 24 bits (figure 2-1). For details of the exception vector table, see section 4, Exception Handling.

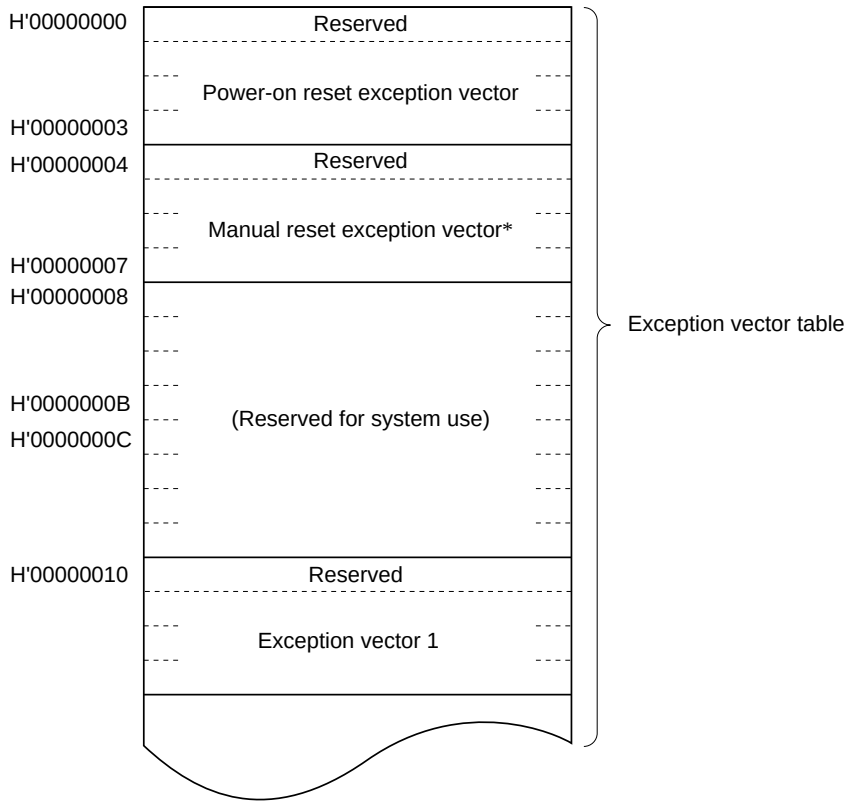

Note: * Manual reset is only supported in the H8S/2357 ZTAT.

Figure 2-1 Exception Vector Table (Advanced Mode)

The memory indirect addressing mode (@@aa:8) employed in the JMP and JSR instructions uses an 8-bit absolute address included in the instruction code to specify a memory operand that contains a branch address. In advanced mode the operand is a 32-bit longword operand, providing a 32-bit branch address. The upper 8 bits of these 32 bits are a reserved area that is regarded as H'00. Branch addresses can be stored in the area from H'00000000 to H'000000FF. Note that the first part of this range is also the exception vector table.

Stack Structure: In advanced mode, when the program counter (PC) is pushed onto the stack in a subroutine call, and the PC, condition-code register (CCR), and extended control register (EXR) are pushed onto the stack in exception handling, they are stored as shown in figure 2-2. When EXR is invalid, it is not pushed onto the stack. For details, see section 4, Exception Handling.

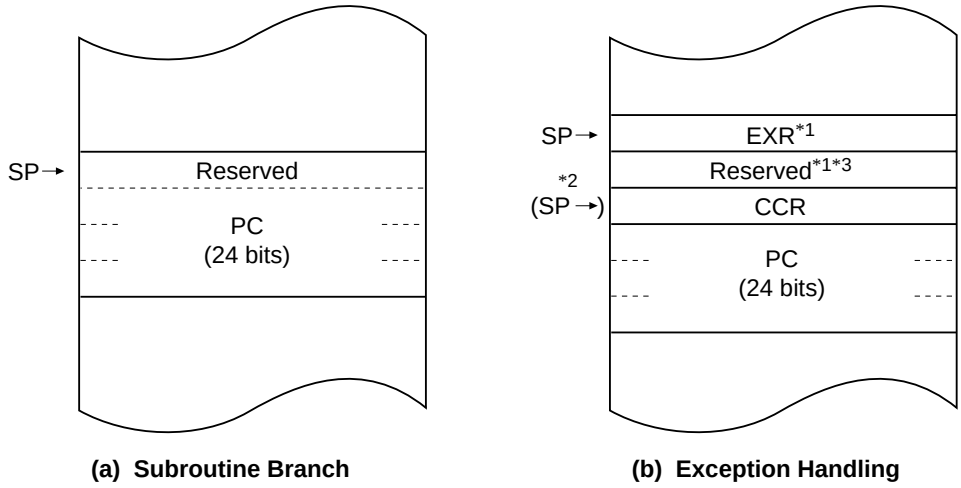

Notes: 1. When EXR is not used it is not stored on the stack.
2. SP when EXR is not used.
3. Ignored when returning.

Figure 2-2 Stack Structure in Advanced Mode

2.3 Address Space

Figure 2-3 shows a memory map of the H8S/2000 CPU. The H8S/2000 CPU provides linear access to a maximum 16-Mbyte (architecturally 4-Gbyte) address space in advanced mode.

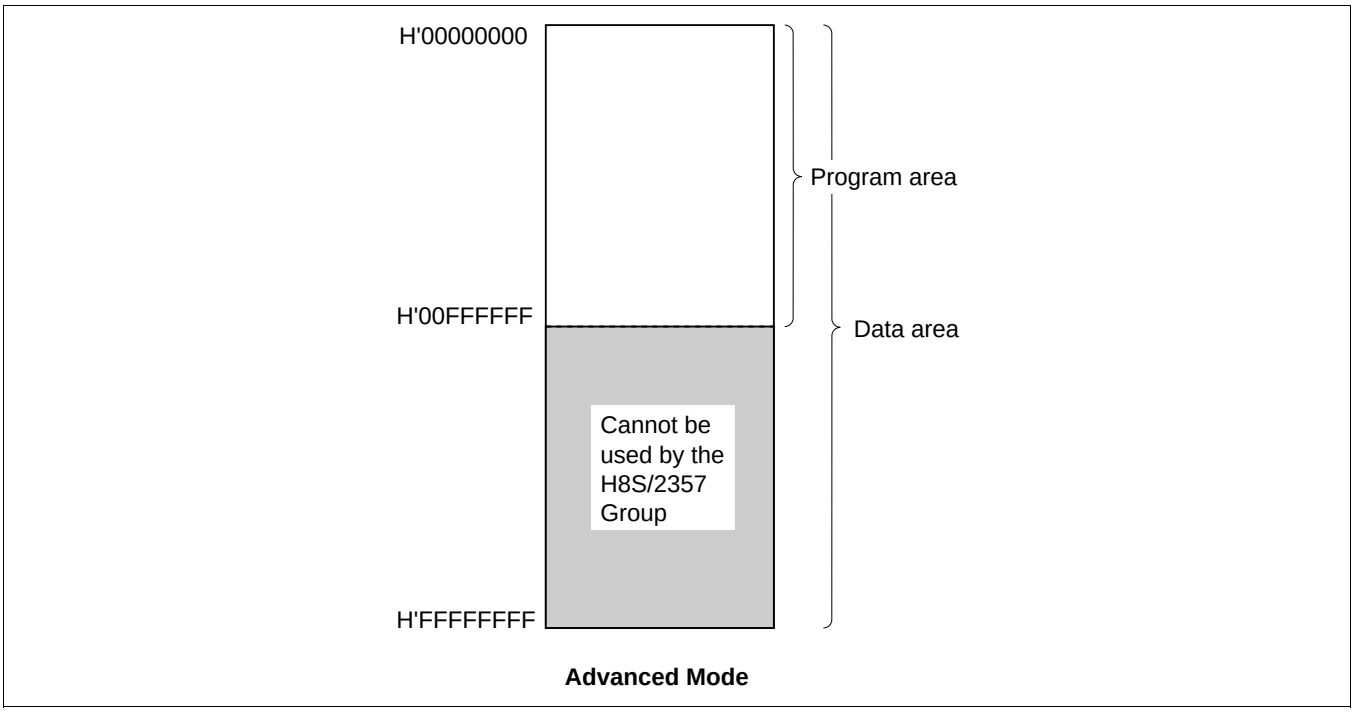

Figure 2-3 Memory Map

2.4 Register Configuration

2.4.1 Overview

The CPU has the internal registers shown in figure 2-4. There are two types of registers: general registers and control registers.

General Registers (Rn) and Extended Registers (En)

	15	07	07	0
ER0	E0	R0H	R0L	
ER1	E1	R1H	R1L	
ER2	E2	R2H	R2L	
ER3	E3	R3H	R3L	
ER4	E4	R4H	R4L	
ER5	E5	R5H	R5L	
ER6	E6	R6H	R6L	
ER7 (SP)	E7	R7H	R7L	

Control Registers (CR)

23	0
PC	

	7	6	5	4	3	2	1	0
EXR	T	—	—	—	—	I2	I1	I0

	7	6	5	4	3	2	1	0
CCR	I	UI	H	U	N	Z	V	C

Legend:

SP:	Stack pointer	H:	Half-carry flag
PC:	Program counter	U:	User bit
EXR:	Extended control register	N:	Negative flag
T:	Trace bit	Z:	Zero flag
I2 to I0:	Interrupt mask bits	V:	Overflow flag
CCR:	Condition-code register	C:	Carry flag
I:	Interrupt mask bit		
UI:	User bit or interrupt mask bit*		

Note: * In the H8S/2357 Group, this bit cannot be used as an interrupt mask.

Figure 2-4 CPU Registers

2.4.2 General Registers

The CPU has eight 32-bit general registers. These general registers are all functionally alike and can be used as both address registers and data registers. When a general register is used as a data register, it can be accessed as a 32-bit, 16-bit, or 8-bit register. When the general registers are used as 32-bit registers or address registers, they are designated by the letters ER (ER0 to ER7).

The ER registers divide into 16-bit general registers designated by the letters E (E0 to E7) and R (R0 to R7). These registers are functionally equivalent, providing a maximum sixteen 16-bit registers. The E registers (E0 to E7) are also referred to as extended registers.

The R registers divide into 8-bit general registers designated by the letters RH (R0H to R7H) and RL (R0L to R7L). These registers are functionally equivalent, providing a maximum sixteen 8-bit registers.

Figure 2-5 illustrates the usage of the general registers. The usage of each register can be selected independently.

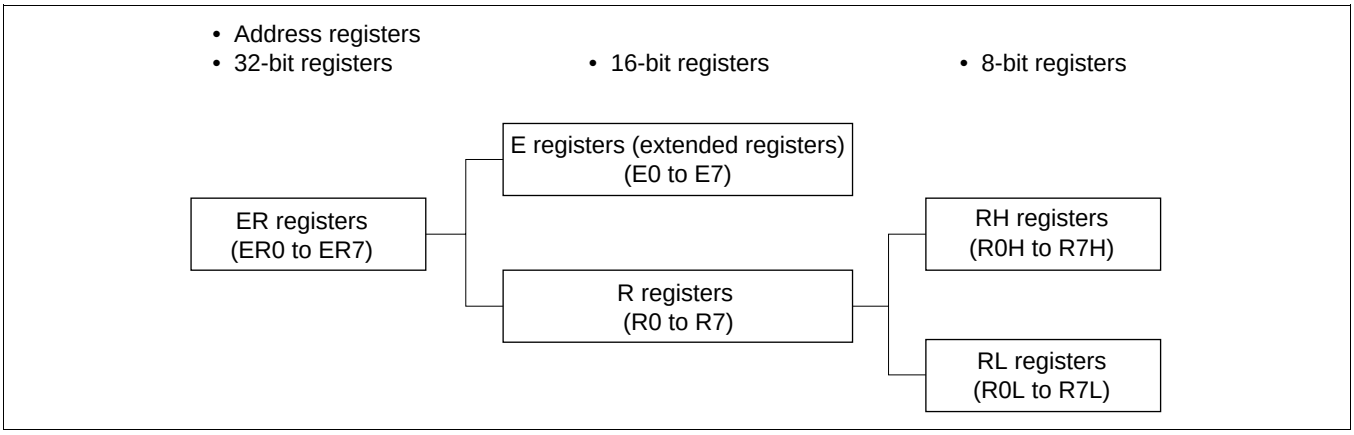

Figure 2-5 Usage of General Registers

General register ER7 has the function of stack pointer (SP) in addition to its general-register function, and is used implicitly in exception handling and subroutine calls. Figure 2-6 shows the stack.

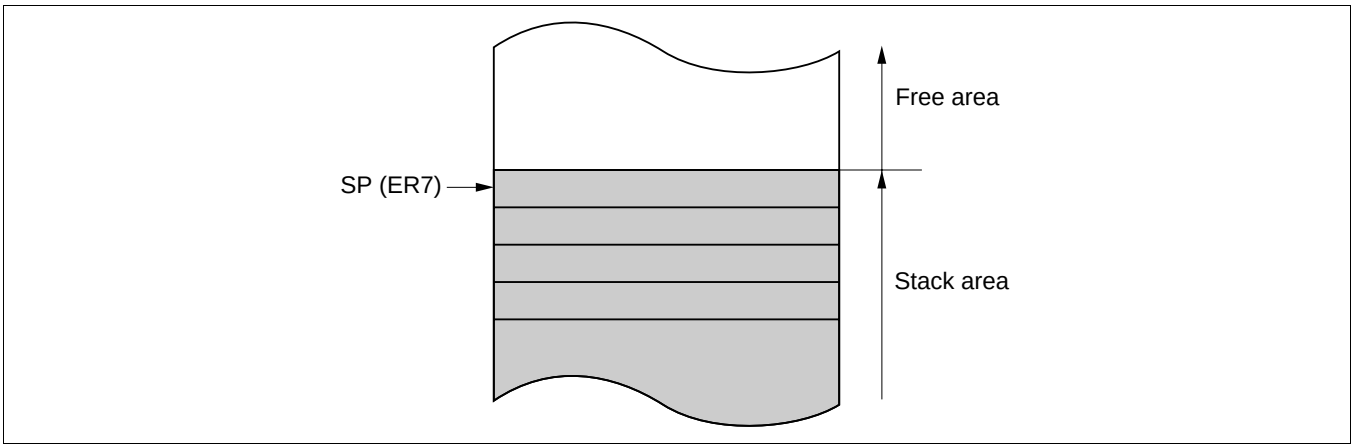

Figure 2-6 Stack

2.4.3 Control Registers

The control registers are the 24-bit program counter (PC), 8-bit extended control register (EXR), and 8-bit condition-code register (CCR).

(1) Program Counter (PC): This 24-bit counter indicates the address of the next instruction the CPU will execute. The length of all CPU instructions is 2 bytes (one word), so the least significant PC bit is ignored. (When an instruction is fetched, the least significant PC bit is regarded as 0.)

(2) Extended Control Register (EXR): This 8-bit register contains the trace bit (T) and three interrupt mask bits (I2 to I0).

Bit 7—Trace Bit (T): Selects trace mode. When this bit is cleared to 0, instructions are executed in sequence. When this bit is set to 1, a trace exception is generated each time an instruction is executed.

Bits 6 to 3—Reserved: These bits are reserved. They are always read as 1.

Bits 2 to 0—Interrupt Mask Bits (I2 to I0): These bits designate the interrupt mask level (0 to 7). For details, refer to section 5, Interrupt Controller.

Operations can be performed on the EXR bits by the LDC, STC, ANDC, ORC, and XORC instructions. All interrupts, including NMI, are disabled for three states after one of these instructions is executed, except for STC.

(3) Condition-Code Register (CCR): This 8-bit register contains internal CPU status information, including an interrupt mask bit (I) and half-carry (H), negative (N), zero (Z), overflow (V), and carry (C) flags.

Bit 7—Interrupt Mask Bit (I): Masks interrupts other than NMI when set to 1. (NMI is accepted regardless of the I bit setting.) The I bit is set to 1 by hardware at the start of an exception-handling sequence. For details, refer to section 5, Interrupt Controller.

Bit 6—User Bit or Interrupt Mask Bit (UI): Can be written and read by software using the LDC, STC, ANDC, ORC, and XORC instructions. With the H8S/2357 Group, this bit cannot be used as an interrupt mask bit.

Bit 5—Half-Carry Flag (H): When the ADD.B, ADDX.B, SUB.B, SUBX.B, CMP.B, or NEG.B instruction is executed, this flag is set to 1 if there is a carry or borrow at bit 3, and cleared to 0 otherwise. When the ADD.W, SUB.W, CMP.W, or NEG.W instruction is executed, the H flag is set to 1 if there is a carry or borrow at bit 11, and cleared to 0 otherwise. When the ADD.L, SUB.L, CMP.L, or NEG.L instruction is executed, the H flag is set to 1 if there is a carry or borrow at bit 27, and cleared to 0 otherwise.

Bit 4—User Bit (U): Can be written and read by software using the LDC, STC, ANDC, ORC, and XORC instructions.

Bit 3—Negative Flag (N): Stores the value of the most significant bit (sign bit) of data.

Bit 2—Zero Flag (Z): Set to 1 to indicate zero data, and cleared to 0 to indicate non-zero data.

Bit 1—Overflow Flag (V): Set to 1 when an arithmetic overflow occurs, and cleared to 0 at other times.

Bit 0—Carry Flag (C): Set to 1 when a carry occurs, and cleared to 0 otherwise. Used by:

- Add instructions, to indicate a carry
- Subtract instructions, to indicate a borrow
- Shift and rotate instructions, to store the value shifted out of the end bit

The carry flag is also used as a bit accumulator by bit manipulation instructions.

Some instructions leave some or all of the flag bits unchanged. For the action of each instruction on the flag bits, refer to Appendix A.1, Instruction List.

Operations can be performed on the CCR bits by the LDC, STC, ANDC, ORC, and XORC instructions. The N, Z, V, and C flags are used as branching conditions for conditional branch (Bcc) instructions.

2.4.4 Initial Register Values

Reset exception handling loads the CPU's program counter (PC) from the vector table, clears the trace bit in EXR to 0, and sets the interrupt mask bits in CCR and EXR to 1. The other CCR bits and the general registers are not initialized. In particular, the stack pointer (ER7) is not initialized. The stack pointer should therefore be initialized by an MOV.L instruction executed immediately after a reset.

2.5 Data Formats

The CPU can process 1-bit, 4-bit (BCD), 8-bit (byte), 16-bit (word), and 32-bit (longword) data. Bit-manipulation instructions operate on 1-bit data by accessing bit n (n = 0, 1, 2, …, 7) of byte operand data. The DAA and DAS decimal-adjust instructions treat byte data as two digits of 4-bit BCD data.

2.5.1 General Register Data Formats

Figure 2-7 shows the data formats in general registers.

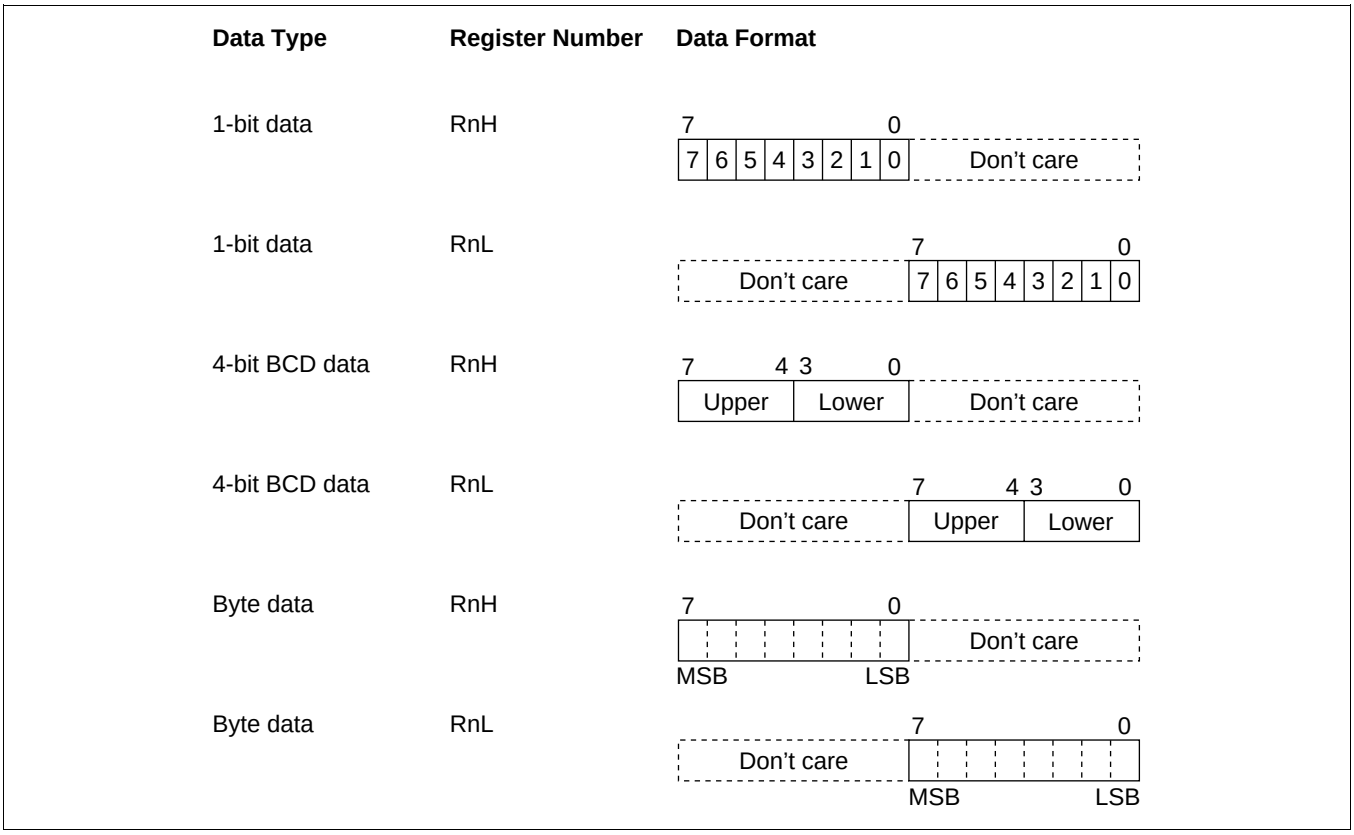

Figure 2-7 General Register Data Formats

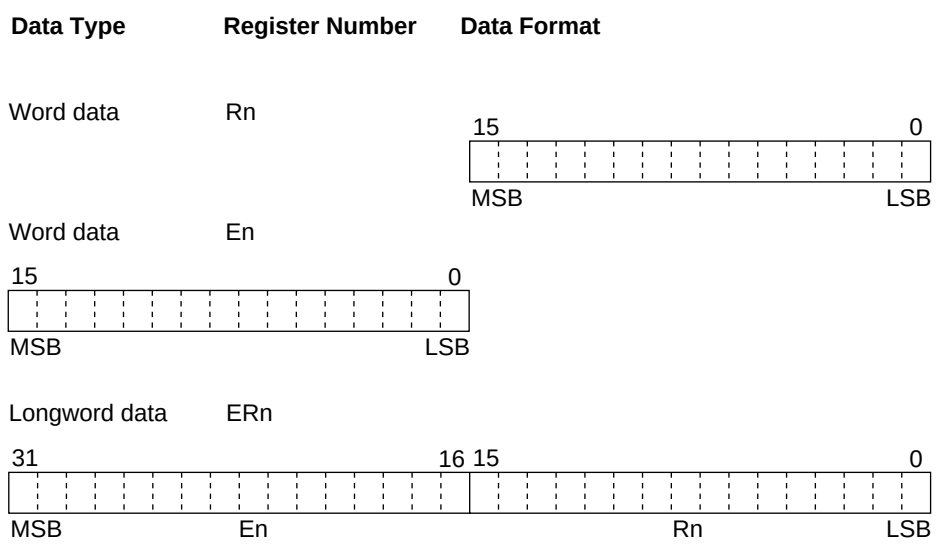

Legend:

ERn: General register ER
En: General register E
Rn: General register R
RnH: General register RH
RnL: General register RL
MSB: Most significant bit
LSB: Least significant bit

Figure 2-7 General Register Data Formats (cont)

2.5.2 Memory Data Formats

Figure 2-8 shows the data formats in memory. The CPU can access word data and longword data in memory, but word or longword data must begin at an even address. If an attempt is made to access word or longword data at an odd address, no address error occurs but the least significant bit of the address is regarded as 0, so the access starts at the preceding address. This also applies to instruction fetches.

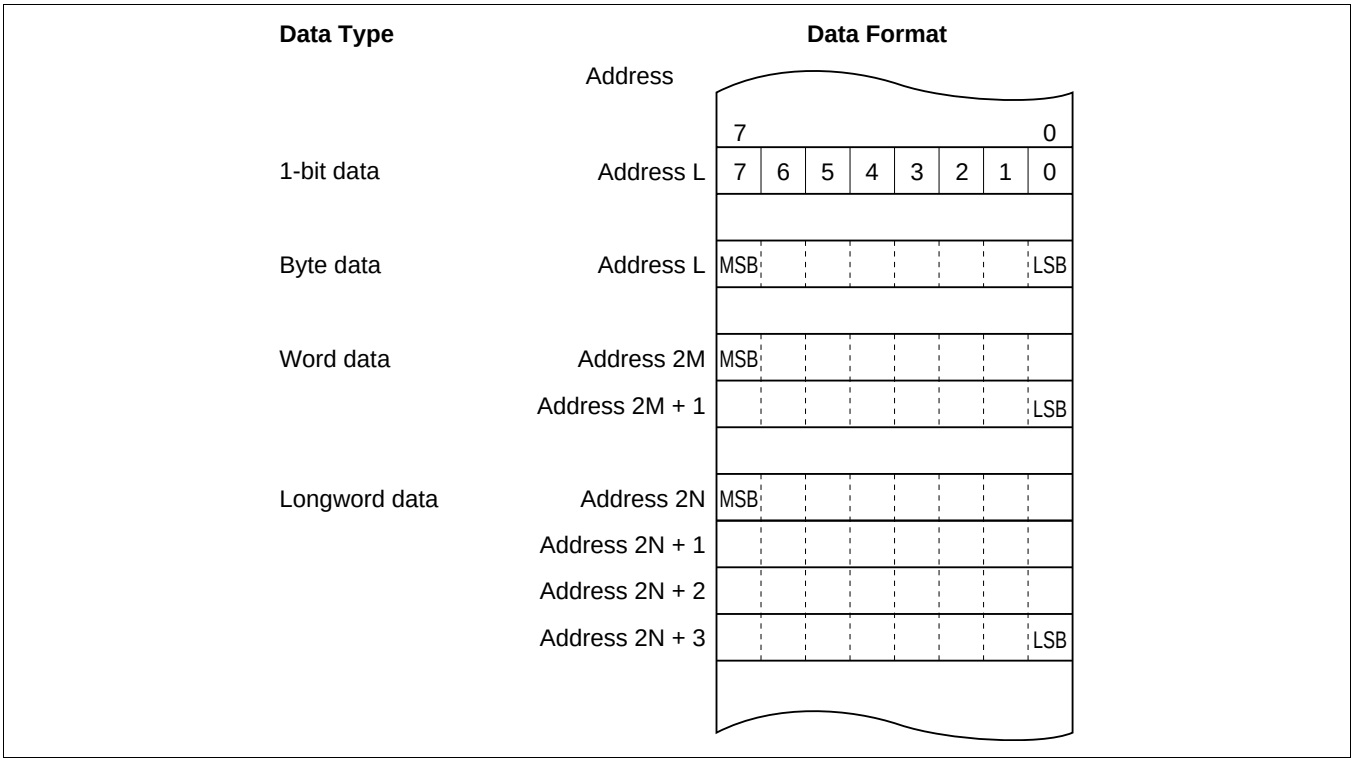

Figure 2-8 Memory Data Formats

When ER7 is used as an address register to access the stack, the operand size should be word size or longword size.

2.6 Instruction Set

2.6.1 Overview

The H8S/2000 CPU has 65 types of instructions. The instructions are classified by function in table 2-1.

Table 2-1 Instruction Classification

Function	Instructions	Size	Types
Data transfer	MOV	BWL	5
	POP*[1], PUSH*[1]	WL	
	LDM, STM	L	
	MOVFPE, MOVTPE*[3]	B	
Arithmetic operations	ADD, SUB, CMP, NEG	BWL	19
	ADDX, SUBX, DAA, DAS	B	
	INC, DEC	BWL	
	ADDS, SUBS	L	
	MULXU, DIVXU, MULXS, DIVXS	BW	
	EXTU, EXTS	WL	
	TAS*[4]	B	
Logic operations	AND, OR, XOR, NOT	BWL	4
Shift	SHAL, SHAR, SHLL, SHLR, ROTL, ROTR, ROTXL, ROTXR	BWL	8
Bit manipulation	BSET, BCLR, BNOT, BTST, BLD, BILD, BST, BIST, BAND, BIAND, BOR, BIOR, BXOR, BIXOR	B	14
Branch	Bcc*[2], JMP, BSR, JSR, RTS	—	5
System control	TRAPA, RTE, SLEEP, LDC, STC, ANDC, ORC, XORC, NOP	—	9
Block data transfer	EEPMOV	—	1
Total:			65

Legend:

B: Byte size

W: Word size

L: Longword size

Notes: 1. POP.W Rn and PUSH.W Rn are identical to MOV.W @SP+, Rn and MOV.W Rn, @-SP. POP.L ERn and PUSH.L ERn are identical to MOV.L @SP+, ERn and MOV.L ERn, @-SP.

2. Bcc is the general name for conditional branch instructions.

3. Cannot be used in the H8S/2357 Group.

4. Only register ER0, ER1, ER4, or ER5 should be used when using the TAS instruction.

2.6.2 Instructions and Addressing Modes

Table 2-2 indicates the combinations of instructions and addressing modes that the H8S/2600 CPU can use.

Table 2-2 Combinations of Instructions and Addressing Modes

Function	Instruction	Addressing Modes													
		#xx	Rn	@ERn	@(d:16,ERn)	@(d:32,ERn)	@–ERn/@ERn+	@aa:8	@aa:16	@aa:24	@aa:32	@(d:8,PC)	@(d:16,PC)	@@aa:8	—
Data transfer	MOV	BWL	BWL	BWL	BWL	BWL	BWL	B	BWL	—	BWL	—	—	—	—
	POP, PUSH	—	—	—	—	—	—	—	—	—	—	—	—	—	WL
	LDM, STM	—	—	—	—	—	—	—	—	—	—	—	—	—	L
	MOVFPE, MOVTPE*1	—	—	—	—	—	—	—	B	—	—	—	—	—	—
Arithmetic operations	ADD, CMP	BWL	BWL	—	—	—	—	—	—	—	—	—	—	—	—
	SUB	WL	BWL	—	—	—	—	—	—	—	—	—	—	—	—
	ADDX, SUBX	B	B	—	—	—	—	—	—	—	—	—	—	—	—
	ADDS, SUBS	—	L	—	—	—	—	—	—	—	—	—	—	—	—
	INC, DEC	—	BWL	—	—	—	—	—	—	—	—	—	—	—	—
	DAA, DAS	—	B	—	—	—	—	—	—	—	—	—	—	—	—
	MULXU, DIVXU	—	BW	—	—	—	—	—	—	—	—	—	—	—	—
	MULXS, DIVXS	—	BW	—	—	—	—	—	—	—	—	—	—	—	—
	NEG	—	BWL	—	—	—	—	—	—	—	—	—	—	—	—
	EXTU, EXTS	—	WL	—	—	—	—	—	—	—	—	—	—	—	—
	TAS*2	—	—	B	—	—	—	—	—	—	—	—	—	—	—
Logic operations	AND, OR, XOR	BWL	BWL	—	—	—	—	—	—	—	—	—	—	—	—
	NOT	—	BWL	—	—	—	—	—	—	—	—	—	—	—	—
Shift		—	BWL	—	—	—	—	—	—	—	—	—	—	—	—
Bit manipulation		—	B	B	—	—	—	B	B	—	B	—	—	—	—
Branch	Bcc, BSR	—	—	—	—	—	—	—	—	—	—	○	○	—	—
	JMP, JSR	—	—	—	—	—	—	—	—	○	—	—	—	○	—
	RTS	—	—	—	—	—	—	—	—	—	—	—	—	—	○
System control	TRAPA	—	—	—	—	—	—	—	—	—	—	—	—	—	○
	RTE	—	—	—	—	—	—	—	—	—	—	—	—	—	○
	SLEEP	—	—	—	—	—	—	—	—	—	—	—	—	—	○
	LDC	B	B	W	W	W	W	—	W	—	W	—	—	—	—
	STC	—	B	W	W	W	W	—	W	—	W	—	—	—	—
	ANDC, ORC, XORC	B	—	—	—	—	—	—	—	—	—	—	—	—	—
	NOP	—	—	—	—	—	—	—	—	—	—	—	—	—	○
Block data transfer		—	—	—	—	—	—	—	—	—	—	—	—	—	BW

Legend:
B: Byte
W: Word
L: Longword

Notes: 1. Cannot be used in the H8S/2357 Group.
2. Only register ER0, ER1, ER4, or ER5 should be used when using the TAS instruction.

2.6.3 Table of Instructions Classified by Function

Table 2-3 summarizes the instructions in each functional category. The notation used in table 2-3 is defined below.

Operation Notation	
Rd	General register (destination)*
Rs	General register (source)*
Rn	General register*
ERn	General register (32-bit register)
(EAd)	Destination operand
(EAs)	Source operand
EXR	Extended control register
CCR	Condition-code register
N	N (negative) flag in CCR
Z	Z (zero) flag in CCR
V	V (overflow) flag in CCR
C	C (carry) flag in CCR
PC	Program counter
SP	Stack pointer
#IMM	Immediate data
disp	Displacement
+	Addition
–	Subtraction
×	Multiplication
÷	Division
∧	Logical AND
∨	Logical OR
⊕	Logical exclusive OR
→	Move
¬	NOT (logical complement)
:8/:16/:24/:32	8-, 16-, 24-, or 32-bit length

Note: * General registers include 8-bit registers (R0H to R7H, R0L to R7L), 16-bit registers (R0 to R7, E0 to E7), and 32-bit registers (ER0 to ER7).

Table 2-3 Instructions Classified by Function

Type	Instruction	Size*[1]	Function
Data transfer	MOV	B/W/L	(EAs) → Rd, Rs → (Ead) Moves data between two general registers or between a general register and memory, or moves immediate data to a general register.
	MOVFPE	B	Cannot be used in the H8S/2357 Group.
	MOVTPE	B	Cannot be used in the H8S/2357 Group.
	POP	W/L	@SP+ → Rn Pops a register from the stack. POP.W Rn is identical to MOV.W @SP+, Rn. POP.L ERn is identical to MOV.L @SP+, ERn.
	PUSH	W/L	Rn → @–SP Pushes a register onto the stack. PUSH.W Rn is identical to MOV.W Rn, @–SP. PUSH.L ERn is identical to MOV.L ERn, @–SP.
	LDM	L	@SP+ → Rn (register list) Pops two or more general registers from the stack.
	STM	L	Rn (register list) → @–SP Pushes two or more general registers onto the stack.
Arithmetic operations	ADD SUB	B/W/L	Rd ± Rs → Rd, Rd ± #IMM → Rd Performs addition or subtraction on data in two general registers, or on immediate data and data in a general register. (Immediate byte data cannot be subtracted from byte data in a general register. Use the SUBX or ADD instruction.)
	ADDX SUBX	B	Rd ± Rs ± C → Rd, Rd ± #IMM ± C → Rd Performs addition or subtraction with carry or borrow on byte data in two general registers, or on immediate data and data in a general register.
	INC DEC	B/W/L	Rd ± 1 → Rd, Rd ± 2 → Rd Increments or decrements a general register by 1 or 2. (Byte operands can be incremented or decremented by 1 only.)
	ADDS SUBS	L	Rd ± 1 → Rd, Rd ± 2 → Rd, Rd ± 4 → Rd Adds or subtracts the value 1, 2, or 4 to or from data in a 32-bit register.
	DAA DAS	B	Rd decimal adjust → Rd Decimal-adjusts an addition or subtraction result in a general register by referring to the CCR to produce 4-bit BCD data.
	MULXU	B/W	Rd × Rs → Rd Performs unsigned multiplication on data in two general registers: either 8 bits × 8 bits → 16 bits or 16 bits × 16 bits → 32 bits.
	MULXS	B/W	Rd × Rs → Rd Performs signed multiplication on data in two general registers: either 8 bits × 8 bits → 16 bits or 16 bits × 16 bits → 32 bits.

Type	Instruction	Size*[1]	Function
Arithmetic operations	DIVXU	B/W	Rd ÷ Rs → Rd Performs unsigned division on data in two general registers: either 16 bits ÷ 8 bits → 8-bit quotient and 8-bit remainder or 32 bits ÷ 16 bits → 16-bit quotient and 16-bit remainder.
	DIVXS	B/W	Rd ÷ Rs → Rd Performs signed division on data in two general registers: either 16 bits ÷ 8 bits → 8-bit quotient and 8-bit remainder or 32 bits ÷ 16 bits → 16-bit quotient and 16-bit remainder.
	CMP	B/W/L	Rd – Rs, Rd – #IMM Compares data in a general register with data in another general register or with immediate data, and sets CCR bits according to the result.
	NEG	B/W/L	0 – Rd → Rd Takes the two's complement (arithmetic complement) of data in a general register.
	EXTU	W/L	Rd (zero extension) → Rd Extends the lower 8 bits of a 16-bit register to word size, or the lower 16 bits of a 32-bit register to longword size, by padding with zeros on the left.
	EXTS	W/L	Rd (sign extension) → Rd Extends the lower 8 bits of a 16-bit register to word size, or the lower 16 bits of a 32-bit register to longword size, by extending the sign bit.
	TAS	B	@ERd – 0, 1 → (<bit 7> of @ERd)*[2] Tests memory contents, and sets the most significant bit (bit 7) to 1.
Logic operations	AND	B/W/L	Rd ∧ Rs → Rd, Rd ∧ #IMM → Rd Performs a logical AND operation on a general register and another general register or immediate data.
	OR	B/W/L	Rd ∨ Rs → Rd, Rd ∨ #IMM → Rd Performs a logical OR operation on a general register and another general register or immediate data.
	XOR	B/W/L	Rd ⊕ Rs → Rd, Rd ⊕ #IMM → Rd Performs a logical exclusive OR operation on a general register and another general register or immediate data.
	NOT	B/W/L	¬ (Rd) → (Rd) Takes the one's complement of general register contents.
Shift operations	SHAL SHAR	B/W/L	Rd (shift) → Rd Performs an arithmetic shift on general register contents. 1-bit or 2-bit shift is possible.
	SHLL SHLR	B/W/L	Rd (shift) → Rd Performs a logical shift on general register contents. 1-bit or 2-bit shift is possible.
	ROTL ROTR	B/W/L	Rd (rotate) → Rd Rotates general register contents. 1-bit or 2-bit rotation is possible.
	ROTXL ROTXR	B/W/L	Rd (rotate) → Rd Rotates general register contents through the carry flag. 1-bit or 2-bit rotation is possible.

Type	Instruction	Size*[1]	Function
Bit-manipulation instructions	BSET	B	1 → (<bit-No.> of <EAd>) Sets a specified bit in a general register or memory operand to 1. The bit number is specified by 3-bit immediate data or the lower three bits of a general register.
	BCLR	B	0 → (<bit-No.> of <EAd>) Clears a specified bit in a general register or memory operand to 0. The bit number is specified by 3-bit immediate data or the lower three bits of a general register.
	BNOT	B	¬ (<bit-No.> of <EAd>) → (<bit-No.> of <EAd>) Inverts a specified bit in a general register or memory operand. The bit number is specified by 3-bit immediate data or the lower three bits of a general register.
	BTST	B	¬ (<bit-No.> of <EAd>) → Z Tests a specified bit in a general register or memory operand and sets or clears the Z flag accordingly. The bit number is specified by 3-bit immediate data or the lower three bits of a general register.
	BAND	B	C ∧ (<bit-No.> of <EAd>) → C ANDs the carry flag with a specified bit in a general register or memory operand and stores the result in the carry flag.
	BIAND	B	C ∧ ¬ (<bit-No.> of <EAd>) → C ANDs the carry flag with the inverse of a specified bit in a general register or memory operand and stores the result in the carry flag. The bit number is specified by 3-bit immediate data.
	BOR	B	C ∨ (<bit-No.> of <EAd>) → C ORs the carry flag with a specified bit in a general register or memory operand and stores the result in the carry flag.
	BIOR	B	C ∨ ¬ (<bit-No.> of <EAd>) → C ORs the carry flag with the inverse of a specified bit in a general register or memory operand and stores the result in the carry flag. The bit number is specified by 3-bit immediate data.
	BXOR	B	C ⊕ (<bit-No.> of <EAd>) → C Exclusive-ORs the carry flag with a specified bit in a general register or memory operand and stores the result in the carry flag.
	BIXOR	B	C ⊕ ¬ (<bit-No.> of <EAd>) → C Exclusive-ORs the carry flag with the inverse of a specified bit in a general register or memory operand and stores the result in the carry flag. The bit number is specified by 3-bit immediate data.
	BLD	B	(<bit-No.> of <EAd>) → C Transfers a specified bit in a general register or memory operand to the carry flag.
	BILD	B	¬ (<bit-No.> of <EAd>) → C Transfers the inverse of a specified bit in a general register or memory operand to the carry flag. The bit number is specified by 3-bit immediate data.

Type	Instruction	Size*[1]	Function
Bit-manipulation instructions	BST	B	C → (<bit-No.> of <EAd>) Transfers the carry flag value to a specified bit in a general register or memory operand.
	BIST	B	¬ C → (<bit-No.> of <EAd>) Transfers the inverse of the carry flag value to a specified bit in a general register or memory operand. The bit number is specified by 3-bit immediate data.
Branch instructions	Bcc	—	Branches to a specified address if a specified condition is true. The branching conditions are listed below.

Mnemonic	Description	Condition
BRA(BT)	Always (true)	Always
BRN(BF)	Never (false)	Never
BHI	High	C ∨ Z = 0
BLS	Low or same	C ∨ Z = 1
BCC(BHS)	Carry clear (high or same)	C = 0
BCS(BLO)	Carry set (low)	C = 1
BNE	Not equal	Z = 0
BEQ	Equal	Z = 1
BVC	Overflow clear	V = 0
BVS	Overflow set	V = 1
BPL	Plus	N = 0
BMI	Minus	N = 1
BGE	Greater or equal	N ⊕ V = 0
BLT	Less than	N ⊕ V = 1
BGT	Greater than	Z∨(N ⊕ V) = 0
BLE	Less or equal	Z∨(N ⊕ V) = 1

	JMP	—	Branches unconditionally to a specified address.
	BSR	—	Branches to a subroutine at a specified address.
	JSR	—	Branches to a subroutine at a specified address.
	RTS	—	Returns from a subroutine.
System control instructions	TRAPA	—	Starts trap-instruction exception handling.
	RTE	—	Returns from an exception-handling routine.
	SLEEP	—	Causes a transition to a power-down state.
	LDC	B/W	(EAs) → CCR, (EAs) → EXR Moves the source operand contents or immediate data to CCR or EXR. Although CCR and EXR are 8-bit registers, word-size transfers are performed between them and memory. The upper 8 bits are valid.
	STC	B/W	CCR → (EAd), EXR → (EAd) Transfers CCR or EXR contents to a general register or memory. Although CCR and EXR are 8-bit registers, word-size transfers are performed between them and memory. The upper 8 bits are valid.

Type	Instruction	Size*[1]	Function
System control instructions	ANDC	B	CCR ∧ #IMM → CCR, EXR ∧ #IMM → EXR Logically ANDs the CCR or EXR contents with immediate data.
	ORC	B	CCR ∨ #IMM → CCR, EXR ∨ #IMM → EXR Logically ORs the CCR or EXR contents with immediate data.
	XORC	B	CCR ⊕ #IMM → CCR, EXR ⊕ #IMM → EXR Logically exclusive-ORs the CCR or EXR contents with immediate data.
	NOP	—	PC + 2 → PC Only increments the program counter.
Block data transfer instruction	EEPMOV.B	—	if R4L ≠ 0 then Repeat @ER5+ → @ER6+ R4L–1 → R4L Until R4L = 0 else next;
	EEPMOV.W	—	if R4 ≠ 0 then Repeat @ER5+ → @ER6+ R4–1 → R4 Until R4 = 0 else next; Transfers a data block according to parameters set in general registers R4L or R4, ER5, and ER6. R4L or R4: size of block (bytes) ER5: starting source address ER6: starting destination address Execution of the next instruction begins as soon as the transfer is completed.

Notes: 1. Size refers to the operand size.
B: Byte
W: Word
L: Longword
2. Only register ER0, ER1, ER4, or ER5 should be used when using the TAS instruction.

2.6.4 Basic Instruction Formats

The CPU instructions consist of 2-byte (1-word) units. An instruction consists of an operation field (op), a register field (r), an effective address extension (EA), and a condition field (cc).

Figure 2-9 shows examples of instruction formats.

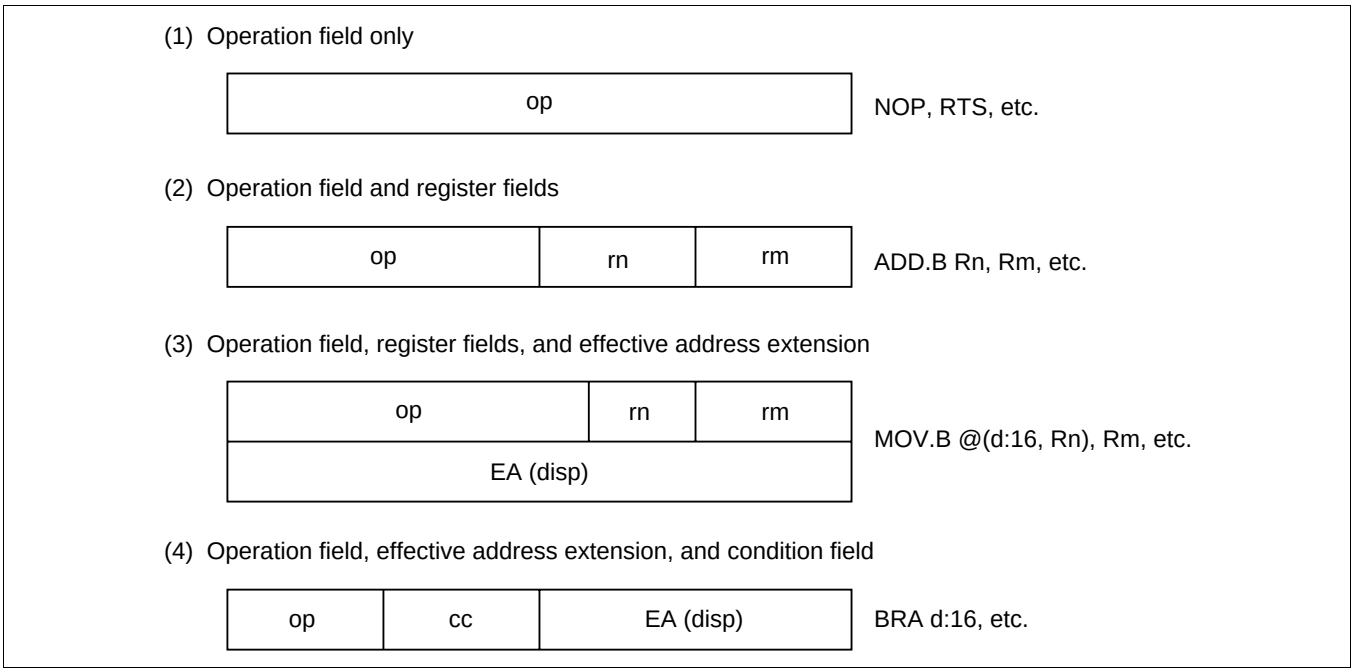

Figure 2-9 Instruction Formats (Examples)

(1) Operation Field: Indicates the function of the instruction, the addressing mode, and the operation to be carried out on the operand. The operation field always includes the first 4 bits of the instruction. Some instructions have two operation fields.

(2) Register Field: Specifies a general register. Address registers are specified by 3 bits, data registers by 3 bits or 4 bits. Some instructions have two register fields. Some have no register field.

(3) Effective Address Extension: Eight, 16, or 32 bits specifying immediate data, an absolute address, or a displacement.

(4) Condition Field: Specifies the branching condition of Bcc instructions.

2.7 Addressing Modes and Effective Address Calculation

2.7.1 Addressing Mode

The CPU supports the eight addressing modes listed in table 2-4. Each instruction uses a subset of these addressing modes. Arithmetic and logic instructions can use the register direct and immediate modes. Data transfer instructions can use all addressing modes except program-counter relative and memory indirect. Bit manipulation instructions use register direct, register indirect, or absolute addressing mode to specify an operand, and register direct (BSET, BCLR, BNOT, and BTST instructions) or immediate (3-bit) addressing mode to specify a bit number in the operand.

Table 2-4 Addressing Modes

No.	Addressing Mode	Symbol
1	Register direct	Rn
2	Register indirect	@ERn
3	Register indirect with displacement	@(d:16,ERn)/@(d:32,ERn)
4	Register indirect with post-increment Register indirect with pre-decrement	@ERn+ @–ERn
5	Absolute address	@aa:8/@aa:16/@aa:24/@aa:32
6	Immediate	#xx:8/#xx:16/#xx:32
7	Program-counter relative	@(d:8,PC)/@(d:16,PC)
8	Memory indirect	@@aa:8

(1) Register Direct—Rn: The register field of the instruction specifies an 8-, 16-, or 32-bit general register containing the operand. R0H to R7H and R0L to R7L can be specified as 8-bit registers. R0 to R7 and E0 to E7 can be specified as 16-bit registers. ER0 to ER7 can be specified as 32-bit registers.

(2) Register Indirect—@ERn: The register field of the instruction code specifies an address register (ERn) which contains the address of the operand on memory. If the address is a program instruction address, the lower 24 bits are valid and the upper 8 bits are all assumed to be 0 (H'00).

(3) Register Indirect with Displacement—@(d:16, ERn) or @(d:32, ERn): A 16-bit or 32-bit displacement contained in the instruction is added to an address register (ERn) specified by the register field of the instruction, and the sum gives the address of a memory operand. A 16-bit displacement is sign-extended when added.

(4) Register Indirect with Post-Increment or Pre-Decrement—@ERn+ or @-ERn:

- Register indirect with post-increment—@ERn+

  The register field of the instruction code specifies an address register (ERn) which contains the address of a memory operand. After the operand is accessed, 1, 2, or 4 is added to the address register contents and the sum is stored in the address register. The value added is 1 for byte access, 2 for word transfer instruction, or 4 for longword transfer instruction. For word or longword transfer instruction, the register value should be even.
- Register indirect with pre-decrement—@-ERn

  The value 1, 2, or 4 is subtracted from an address register (ERn) specified by the register field in the instruction code, and the result becomes the address of a memory operand. The result is also stored in the address register. The value subtracted is 1 for byte access, 2 for word transfer instruction, or 4 for longword transfer instruction. For word or longword transfer instruction, the register value should be even.

(5) Absolute Address—@aa:8, @aa:16, @aa:24, or @aa:32: The instruction code contains the absolute address of a memory operand. The absolute address may be 8 bits long (@aa:8), 16 bits long (@aa:16), 24 bits long (@aa:24), or 32 bits long (@aa:32).

To access data, the absolute address should be 8 bits (@aa:8), 16 bits (@aa:16), or 32 bits (@aa:32) long. For an 8-bit absolute address, the upper 24 bits are all assumed to be 1 (H'FFFF). For a 16-bit absolute address the upper 16 bits are a sign extension. A 32-bit absolute address can access the entire address space.

A 24-bit absolute address (@aa:24) indicates the address of a program instruction. The upper 8 bits are all assumed to be 0 (H'00).

Table 2-5 indicates the accessible absolute address ranges.

Table 2-5 Absolute Address Access Ranges

Absolute Address		Advanced Mode
Data address	8 bits (@aa:8)	H'FFFF00 to H'FFFFFF
	16 bits (@aa:16)	H'000000 to H'007FFF, H'FF8000 to H'FFFFFF
	32 bits (@aa:32)	H'000000 to H'FFFFFF
Program instruction address	24 bits (@aa:24)	

(6) Immediate—#xx:8, #xx:16, or #xx:32: The instruction contains 8-bit (#xx:8), 16-bit (#xx:16), or 32-bit (#xx:32) immediate data as an operand.

The ADDS, SUBS, INC, and DEC instructions contain immediate data implicitly. Some bit manipulation instructions contain 3-bit immediate data in the instruction code, specifying a bit number. The TRAPA instruction contains 2-bit immediate data in its instruction code, specifying a vector address.

(7) Program-Counter Relative—@(d:8, PC) or @(d:16, PC): This mode is used in the Bcc and BSR instructions. An 8-bit or 16-bit displacement contained in the instruction is sign-extended and added to the 24-bit PC contents to generate a branch address. Only the lower 24 bits of this branch address are valid; the upper 8 bits are all assumed to be 0 (H'00). The PC value to which the displacement is added is the address of the first byte of the next instruction, so the possible branching range is –126 to +128 bytes (–63 to +64 words) or –32766 to +32768 bytes (–16383 to +16384 words) from the branch instruction. The resulting value should be an even number.

(8) Memory Indirect—@@aa:8: This mode can be used by the JMP and JSR instructions. The instruction code contains an 8-bit absolute address specifying a memory operand. This memory operand contains a branch address. The upper bits of the absolute address are all assumed to be 0, so the address range is 0 to 255 (H'000000 to H'0000FF).

Note that the first part of the address range is also the exception vector area. For further details, refer to section 4, Exception Handling.

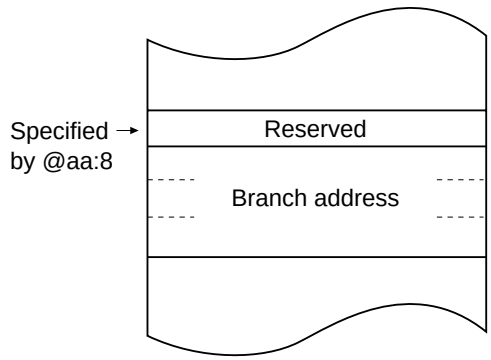

Figure 2-10 Branch Address Specification in Memory Indirect Mode

If an odd address is specified in word or longword memory access, or as a branch address, the least significant bit is regarded as 0, causing data to be accessed or instruction code to be fetched at the address preceding the specified address. (For further information, see section 2.5.2, Memory Data Formats.)

2.7.2 Effective Address Calculation

Table 2-6 indicates how effective addresses are calculated in each addressing mode.

Table 2-6 Effective Address Calculation

No.	Addressing Mode and Instruction Format	Effective Address Calculation	Effective Address (EA)
1	Register direct (Rn) op rm rn		Operand is general register contents.
2	Register indirect (@ERn) op r	31 General register contents 0	31 Don't care 24 23 0
3	Register indirect with displacement @(d:16, ERn) or @(d:32, ERn) op r disp	31 General register contents 0 31 Sign extension disp 0	31 Don't care 24 23 0
4	Register indirect with post-increment or pre-decrement • Register indirect with post-increment @ERn+ op r • Register indirect with pre-decrement @–ERn op r	31 General register contents 0 1, 2, or 4 31 General register contents 0 1, 2, or 4 Operand Size / Value added Byte 1 Word 2 Longword 4	31 Don't care 24 23 0 31 Don't care 24 23 0

No.	Addressing Mode and Instruction Format	Effective Address Calculation	Effective Address (EA)
5	Absolute address @aa:8 op | abs @aa:16 op | abs @aa:24 op | abs @aa:32 op abs		31 24 23 8 7 0 Don't care | H'FFFF | 31 24 23 16 15 0 Don't care | Sign extension | 31 24 23 0 Don't care | 31 24 23 0 Don't care |
6	Immediate #xx:8/#xx:16/#xx:32 op | IMM		Operand is immediate data.

No.	Addressing Mode and Instruction Format	Effective Address Calculation	Effective Address (EA)
7	Program-counter relative @(d:8, PC)/@(d:16, PC)	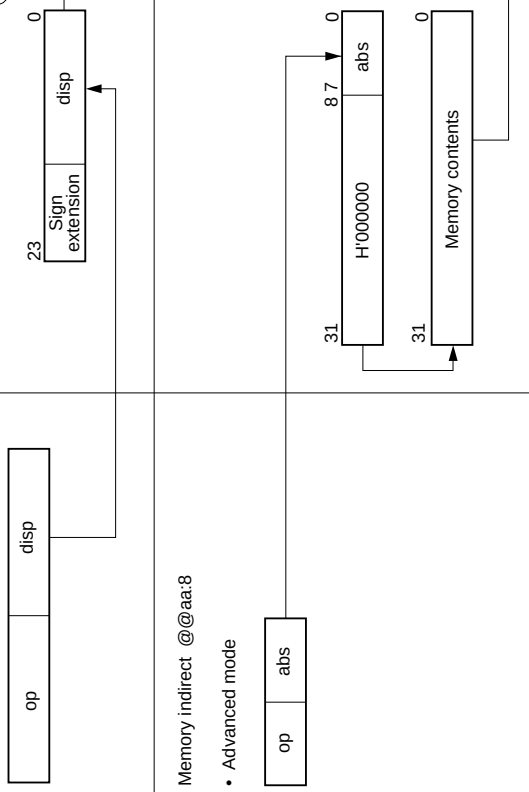	
8	Memory indirect @@aa:8 • Advanced mode		

2.8 Processing States

2.8.1 Overview

The CPU has five main processing states: the reset state, exception handling state, program execution state, bus-released state, and power-down state. Figure 2-11 shows a diagram of the processing states. Figure 2-12 indicates the state transitions.

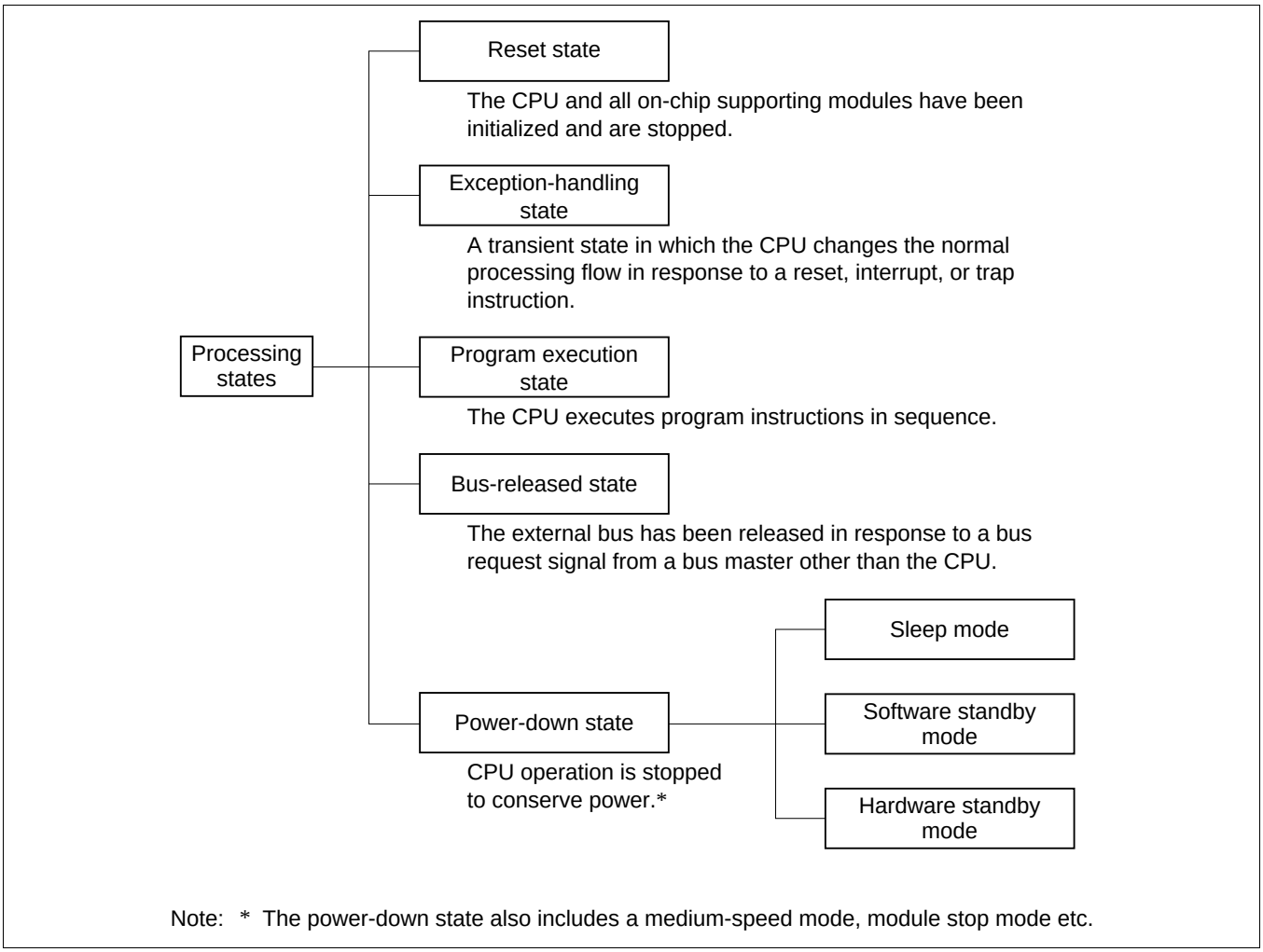

Figure 2-11 Processing States

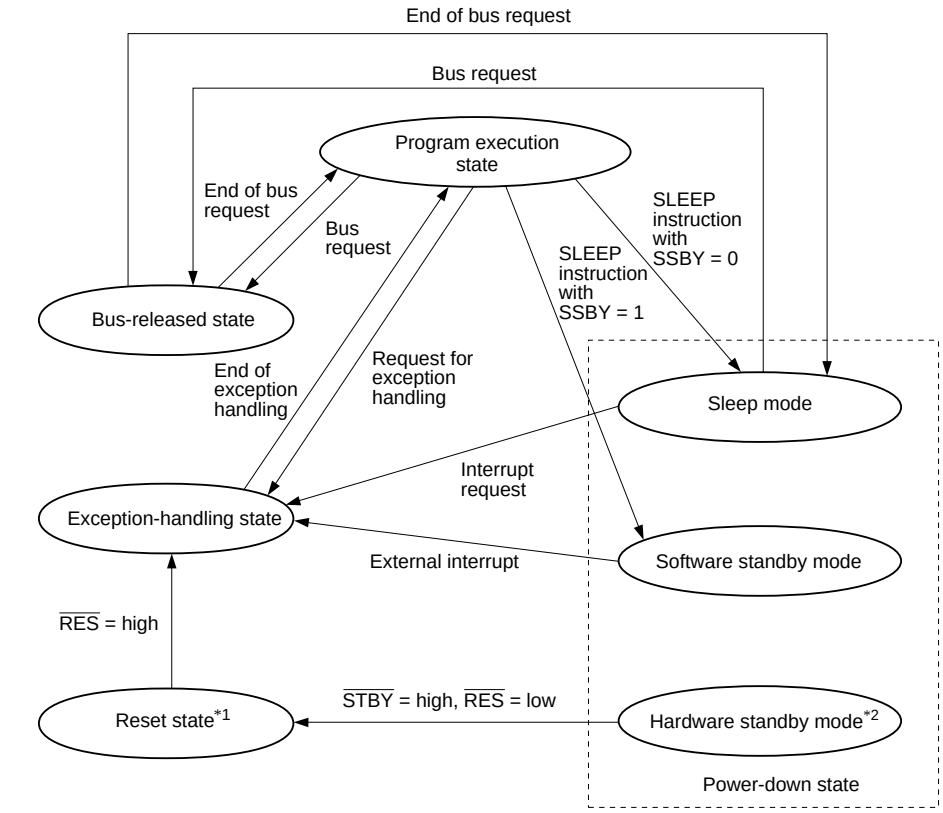

Notes: 1. From any state except hardware standby mode, a transition to the reset state occurs whenever $\overline{RES}$ goes low. A transition can also be made to the reset state when the watchdog timer overflows.
2. From any state, a transition to hardware standby mode occurs when $\overline{STBY}$ goes low.

Figure 2-12 State Transitions

2.8.2 Reset State

When the $\overline{RES}$ input goes low all current processing stops and the CPU enters the reset state. The CPU enters the power-on reset state when the NMI pin is high, or the manual reset* state when the NMI pin is low. All interrupts are masked in the reset state. Reset exception handling starts when the $\overline{RES}$ signal changes from low to high.

The reset state can also be entered by a watchdog timer overflow. For details, refer to section 13, Watchdog Timer.

Note: * Manual reset is only supported in the H8S/2357 ZTAT.

2.8.3 Exception-Handling State

The exception-handling state is a transient state that occurs when the CPU alters the normal processing flow due to a reset, interrupt, or trap instruction. The CPU fetches a start address (vector) from the exception vector table and branches to that address.

(1) Types of Exception Handling and Their Priority

Exception handling is performed for traces, resets, interrupts, and trap instructions. Table 2-7 indicates the types of exception handling and their priority. Trap instruction exception handling is always accepted, in the program execution state.

Exception handling and the stack structure depend on the interrupt control mode set in SYSCR.

Table 2-7 Exception Handling Types and Priority

Priority	Type of Exception	Detection Timing	Start of Exception Handling
High	Reset	Synchronized with clock	Exception handling starts immediately after a low-to-high transition at the $\overline{RES}$ pin, or when the watchdog timer overflows.
	Trace	End of instruction execution or end of exception-handling sequence*[1]	When the trace (T) bit is set to 1, the trace starts at the end of the current instruction or current exception-handling sequence
	Interrupt	End of instruction execution or end of exception-handling sequence*[2]	When an interrupt is requested, exception handling starts at the end of the current instruction or current exception-handling sequence
Low	Trap instruction	When TRAPA instruction is executed	Exception handling starts when a trap (TRAPA) instruction is executed*[3]

Notes: 1. Traces are enabled only in interrupt control mode 2. Trace exception-handling is not executed at the end of the RTE instruction.
2. Interrupts are not detected at the end of the ANDC, ORC, XORC, and LDC instructions, or immediately after reset exception handling.
3. Trap instruction exception handling is always accepted, in the program execution state.

(2) Reset Exception Handling

After the $\overline{RES}$ pin has gone low and the reset state has been entered, when $\overline{RES}$ goes high again, reset exception handling starts. The CPU enters the power-on reset state when the NMI pin is high, or the manual reset* state when the NMI pin is low. When reset exception handling starts the CPU fetches a start address (vector) from the exception vector table and starts program execution from that address. All interrupts, including NMI, are disabled during reset exception handling and after it ends.

Note : * Manual reset is only supported in the H8S/2357 ZTAT.

(3) Traces

Traces are enabled only in interrupt control mode 2. Trace mode is entered when the T bit of EXR is set to 1. When trace mode is established, trace exception handling starts at the end of each instruction.

At the end of a trace exception-handling sequence, the T bit of EXR is cleared to 0 and trace mode is cleared. Interrupt masks are not affected.

The T bit saved on the stack retains its value of 1, and when the RTE instruction is executed to return from the trace exception-handling routine, trace mode is entered again. Trace exception-handling is not executed at the end of the RTE instruction.

Trace mode is not entered in interrupt control mode 0, regardless of the state of the T bit.

(4) Interrupt Exception Handling and Trap Instruction Exception Handling

When interrupt or trap-instruction exception handling begins, the CPU references the stack pointer (ER7) and pushes the program counter and other control registers onto the stack. Next, the CPU alters the settings of the interrupt mask bits in the control registers. Then the CPU fetches a start address (vector) from the exception vector table and program execution starts from that start address.

Figure 2-13 shows the stack after exception handling ends.

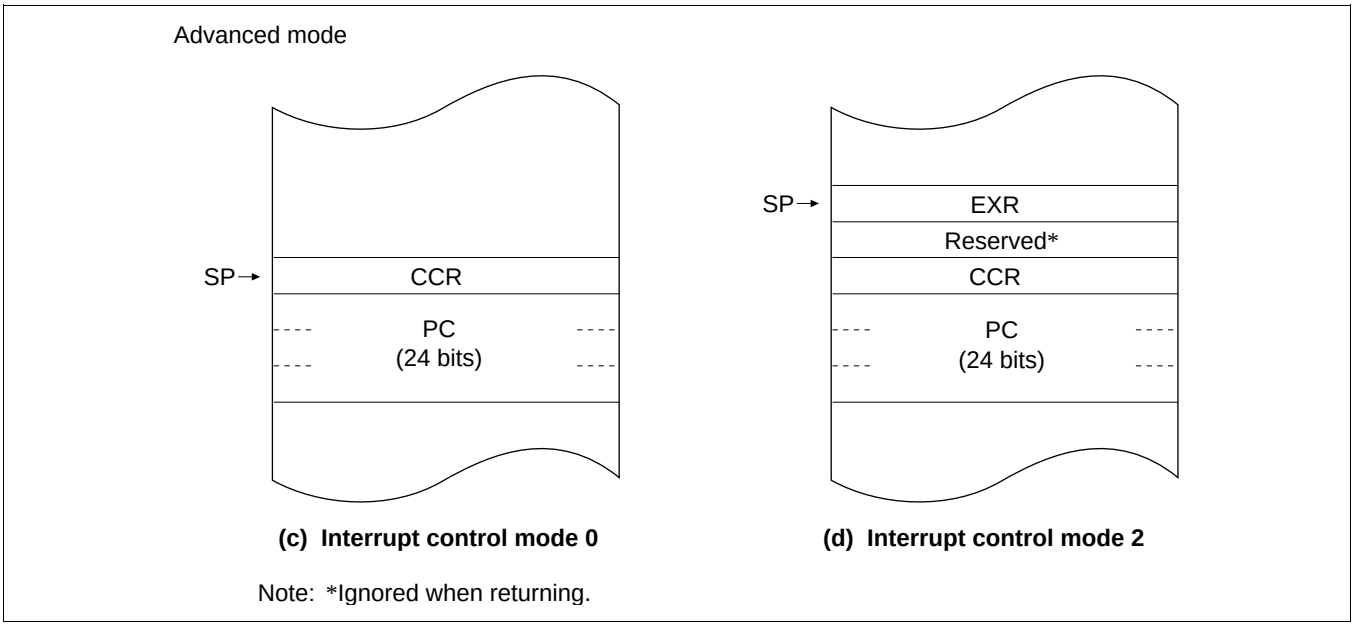

Figure 2-13 Stack Structure after Exception Handling (Examples)

2.8.4 Program Execution State

In this state the CPU executes program instructions in sequence.

2.8.5 Bus-Released State

This is a state in which the bus has been released in response to a bus request from a bus master other than the CPU. While the bus is released, the CPU halts.

There is two more bus masters in addition to the CPU: the DMA contraler (DMAC) and data transfer controller (DTC).

For further details, refer to section 6, Bus Controller.

2.8.6 Power-Down State

The power-down state includes both modes in which the CPU stops operating and modes in which the CPU does not stop. There are three modes in which the CPU stops operating: sleep mode, software standby mode, and hardware standby mode. There are also two other power-down modes: medium-speed mode, and module stop mode. In medium-speed mode the CPU and other bus masters operate on a medium-speed clock. Module stop mode permits halting of the operation of individual modules, other than the CPU. For details, refer to section 21, Power-Down Modes.

(1) Sleep Mode: A transition to sleep mode is made if the SLEEP instruction is executed while the software standby bit (SSBY) in the standby control register (SBYCR) is cleared to 0. In sleep mode, CPU operations stop immediately after execution of the SLEEP instruction. The contents of CPU registers are retained.

(2) Software Standby Mode: A transition to software standby mode is made if the SLEEP instruction is executed while the SSBY bit in SBYCR is set to 1. In software standby mode, the CPU and clock halt and all MCU operations stop. As long as a specified voltage is supplied, the contents of CPU registers and on-chip RAM are retained. The I/O ports also remain in their existing states.

(3) Hardware Standby Mode: A transition to hardware standby mode is made when the $\overline{\text{STBY}}$ pin goes low. In hardware standby mode, the CPU and clock halt and all MCU operations stop. The on-chip supporting modules are reset, but as long as a specified voltage is supplied, on-chip RAM contents are retained.

2.9 Basic Timing

2.9.1 Overview

The CPU is driven by a system clock, denoted by the symbol ø. The period from one rising edge of ø to the next is referred to as a "state." The memory cycle or bus cycle consists of one, two, or three states. Different methods are used to access on-chip memory, on-chip supporting modules, and the external address space.

2.9.2 On-Chip Memory (ROM, RAM)

On-chip memory is accessed in one state. The data bus is 16 bits wide, permitting both byte and word transfer instruction. Figure 2-14 shows the on-chip memory access cycle. Figure 2-15 shows the pin states.

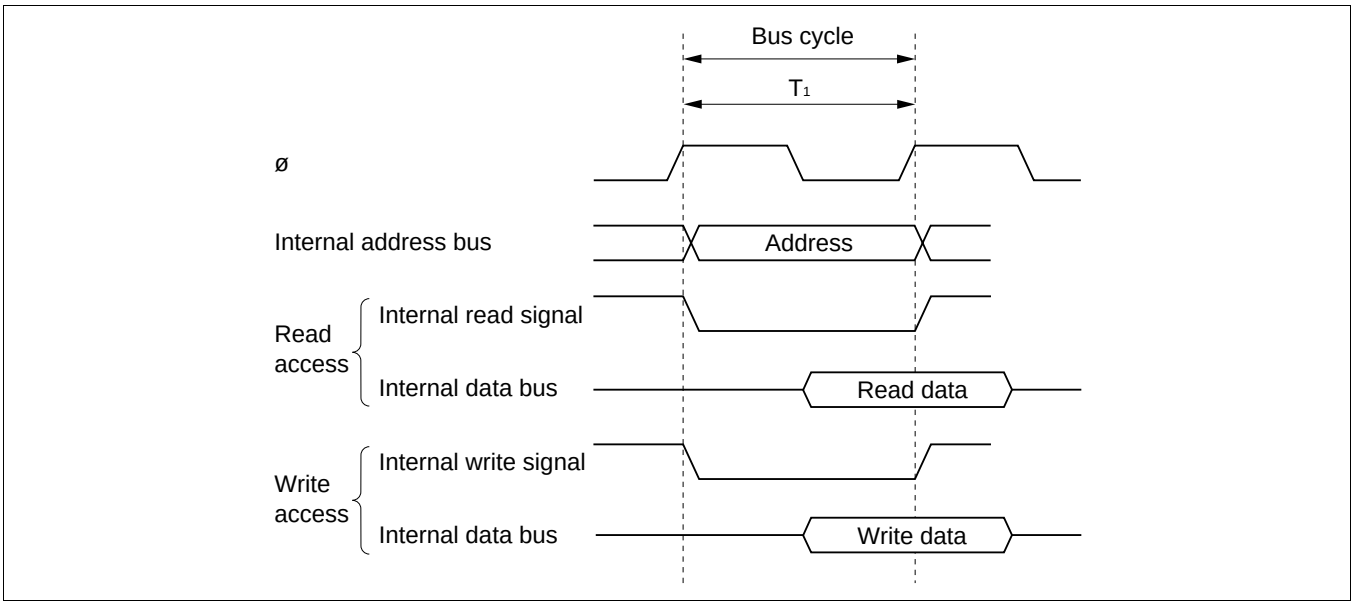

Figure 2-14 On-Chip Memory Access Cycle

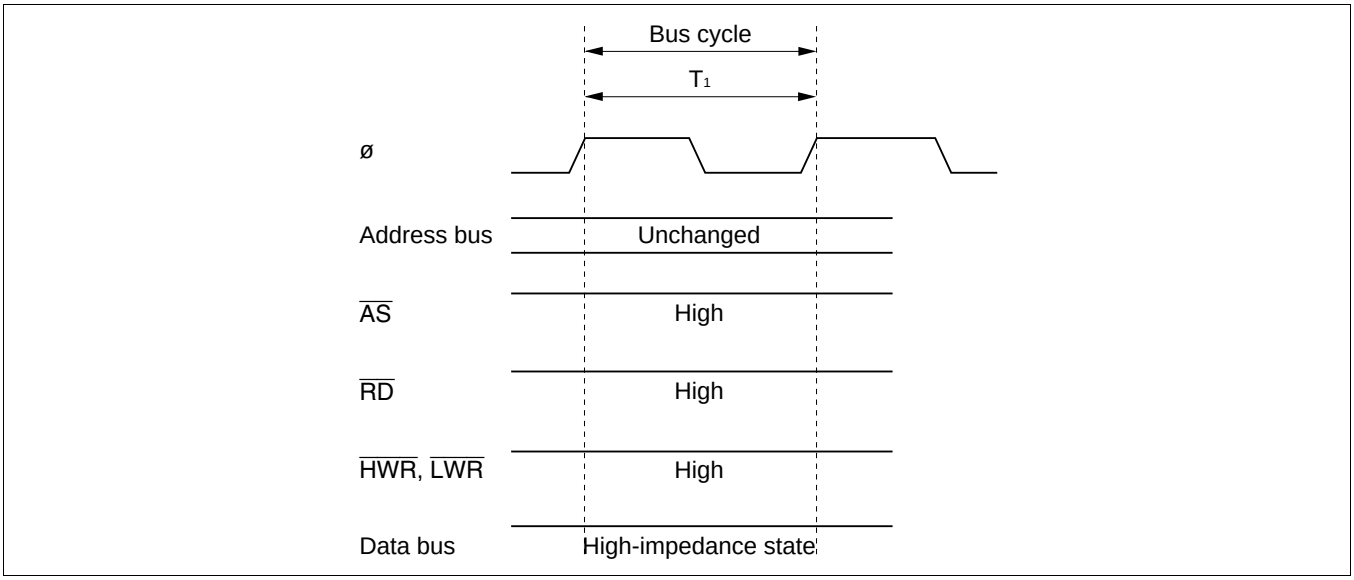

Figure 2-15 Pin States during On-Chip Memory Access

2.9.3 On-Chip Supporting Module Access Timing

The on-chip supporting modules are accessed in two states. The data bus is either 8 bits or 16 bits wide, depending on the particular internal I/O register being accessed. Figure 2-16 shows the access timing for the on-chip supporting modules. Figure 2-17 shows the pin states.

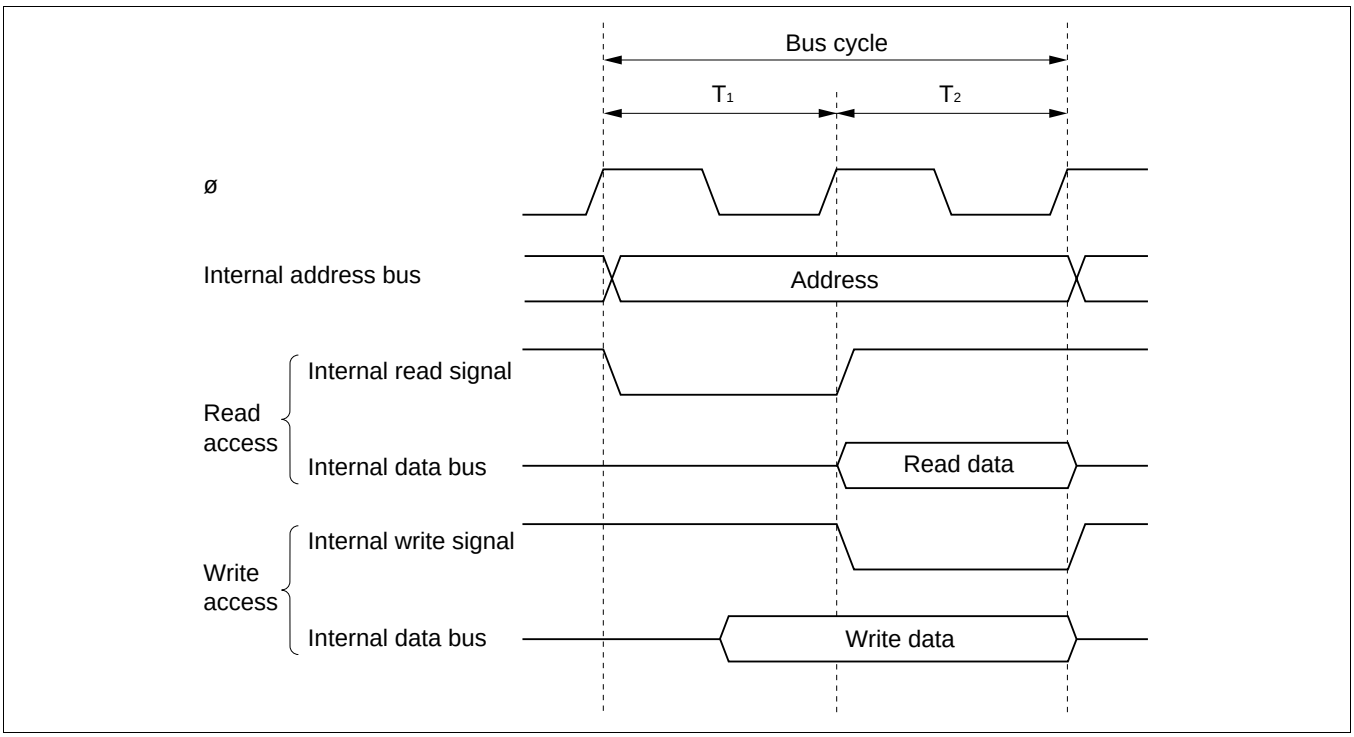

Figure 2-16 On-Chip Supporting Module Access Cycle

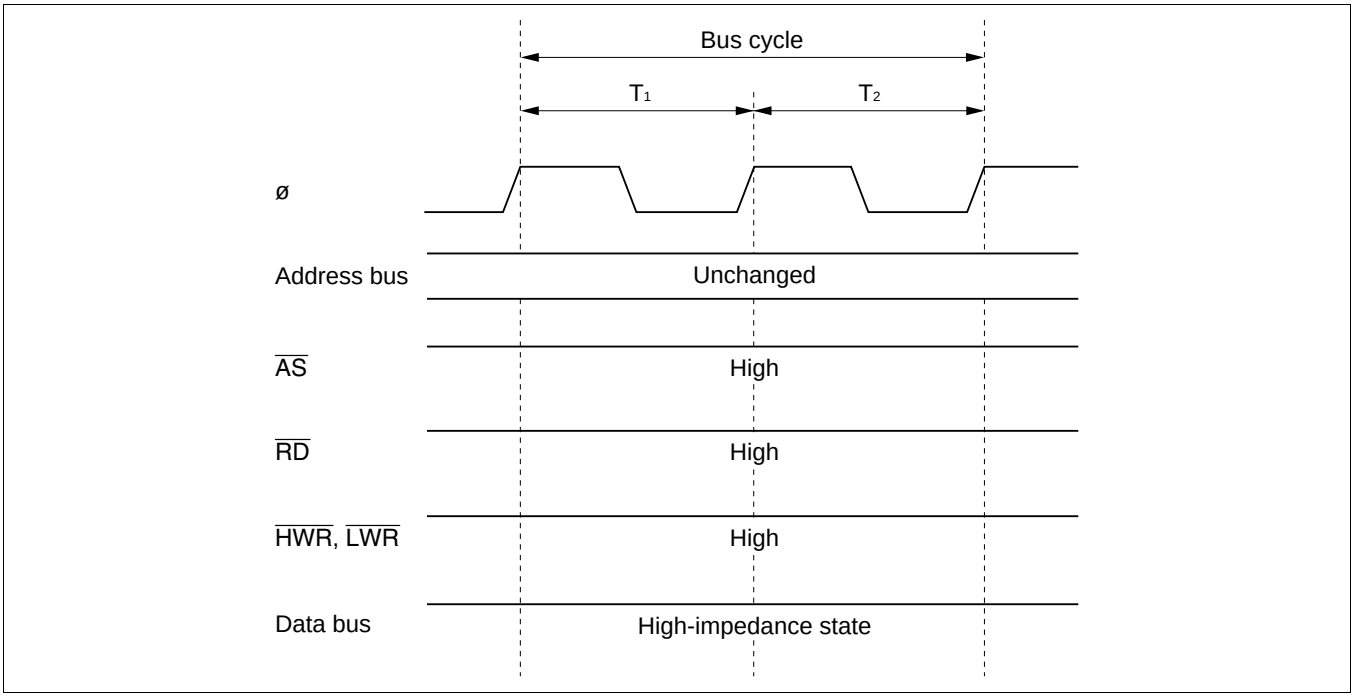

Figure 2-17 Pin States during On-Chip Supporting Module Access

2.9.4 External Address Space Access Timing

The external address space is accessed with an 8-bit or 16-bit data bus width in a two-state or three-state bus cycle. In three-state access, wait states can be inserted. For further details, refer to section 6, Bus Controller.

2.10 Usage Note

2.10.1 TAS Instruction

Only register ER0, ER1, ER4, or ER5 should be used when using the TAS instruction. The TAS instruction is not generated by the Renesas H8S and H8/300 Series C/C++ compilers. If the TAS instruction is used as a user-defined intrinsic function, ensure that only register ER0, ER1, ER4, or ER5 is used.

Section 3 MCU Operating Modes

3.1 Overview

3.1.1 Operating Mode Selection (H8S/2357 F-ZTAT Only)

The H8S/2357 F-ZTAT has eight operating modes (modes 4 to 7, 10, 11, 14 and 15). These modes are determined by the mode pin (MD_2 to MD_0) and flash write enable pin (FWE) settings. The CPU operating mode and initial bus width can be selected as shown in table 3-1.

Table 3-1 lists the MCU operating modes.

Table 3-1 MCU Operating Mode Selection (H8S/2357 F-ZTAT Only)

MCU Operating Mode	FWE	MD_2	MD_1	MD_0	CPU Operating Mode	Description	On-Chip ROM	External Data Bus Initial Width	External Data Bus Max. Width
0	0	0	0	0	—	—	—	—	—
1				1					
2			1	0					
3				1					
4		1	0	0	Advanced	On-chip ROM disabled, expanded mode	Disabled	16 bits	16 bits
5				1				8 bits	16 bits
6			1	0		On-chip ROM enabled, expanded mode	Enabled	8 bits	16 bits
7				1		Single-chip mode		—	—
8	1	0	0	0	—	—	—	—	—
9				1					
10			1	0	Advanced	Boot mode	Enabled	8 bits	16 bits
11				1				—	—
12		1	0	0	—	—	—	—	—
13				1					
14			1	0	Advanced	User program mode	Enabled	8 bits	16 bits
15				1				—	—

The CPU's architecture allows for 4 Gbytes of address space, but the H8S/2357 Group actually accesses a maximum of 16 Mbytes.

Modes 4 to 6 are externally expanded modes that allow access to external memory and peripheral devices.

The external expansion modes allow switching between 8-bit and 16-bit bus modes. After program execution starts, an 8-bit or 16-bit address space can be set for each area, depending on the bus controller setting. If 16-bit access is selected for any one area, 16-bit bus mode is set; if 8-bit access is selected for all areas, 8-bit bus mode is set.

Note that the functions of each pin depend on the operating mode.

Modes 10, 11, 14, and 15 are boot modes and user program modes in which the flash memory can be programmed and erased. For details, see section 19, ROM.

The H8S/2357 F-ZTAT can only be used in modes 4 to 7, 10, 11, 14, and 15. This means that the flash write enable pin and mode pins must be set to select one of these modes.

Do not change the inputs at the mode pins during operation.

3.1.2 Operating Mode Selection (ZTAT, Masked ROM, ROMless Version, and H8S/2398 F-ZTAT)

The H8S/2357 Group has four operating modes (modes 4 to 7). These modes enable selection of the CPU operating mode, enabling/disabling of on-chip ROM, and the initial bus width setting, by setting the mode pins (MD_2 to MD_0).

Table 3-2 lists the MCU operating modes.

Table 3-2 MCU Operating Mode Selection (ZTAT, Masked ROM, ROMless , and H8S/2398 F-ZTAT)

MCU Operating Mode	MD_2	MD_1	MD_0	CPU Operating Mode	Description	On-Chip ROM	External Data Bus Initial Width	External Data Bus Max. Width
0	0	0	0	—	—	—	—	—
1			1					
2*[1]		1	0					
3*[1]			1					
4*[2]	1	0	0	Advanced	On-chip ROM disabled, expanded mode	Disabled	16 bits	16 bits
5*[2]			1				8 bits	16 bits
6		1	0		On-chip ROM enabled, expanded mode	Enabled	8 bits	16 bits
7			1		Single-chip mode		—	—

Notes: 1. In the H8S/2398 F-ZTAT, modes 2 and 3 indicate boot mode. For details on boot mode of the H8S/2398 F-ZTAT version, refer to table 19-35 in section 19.17, On-Board Programming Modes.
In addition, for details on user program mode, refer also to tables 19-35 in section 19.17, On-Board Programming Modes.
2. In ROMless version, only modes 4 and 5 are available.

The CPU's architecture allows for 4 Gbytes of address space, but the H8S/2357 Group actually accesses a maximum of 16 Mbytes.

Modes 4 to 6 are externally expanded modes that allow access to external memory and peripheral devices.

The external expansion modes allow switching between 8-bit and 16-bit bus modes. After program execution starts, an 8-bit or 16-bit address space can be set for each area, depending on the bus controller setting. If 16-bit access is selected for any one area, 16-bit bus mode is set; if 8-bit access is selected for all areas, 8-bit bus mode is set.

Note that the functions of each pin depend on the operating mode.

The H8S/2357 Group cannot be used in modes 4 to 7. This means that the mode pins must be set to select 4 to 7 modes.

Do not change the inputs at the mode pins during operation.

3.1.3 Register Configuration

The H8S/2357 Group has a mode control register (MDCR) that indicates the inputs at the mode pins (MD_2 to MD_0), and a system control register (SYSCR) and a system control register 2 (SYSCR2)*[2] that control the operation of the H8S/2357 Group. Table 3-3 summarizes these registers.

Table 3-3 MCU Registers

Name	Abbreviation	R/W	Initial Value	Address*[1]
Mode control register	MDCR	R	Undetermined	H'FF3B
System control register	SYSCR	R/W	H'01	H'FF39
System control register 2*[2]	SYSCR2	R/W	H'00	H'FF42

Notes: 1. Lower 16 bits of the address.
2. The SYSCR2 register can only be used in the F-ZTAT version. In the masked ROM and ZTAT versions, this register cannot be written to and will return an undefined value if read.

3.2 Register Descriptions

3.2.1 Mode Control Register (MDCR)

Bit	:	7	6	5	4	3	2	1	0
		—	—	—	—	—	MDS2	MDS1	MDS0
Initial value	:	1	0	0	0	0	—*	—*	—*
R/W	:	—	—	—	—	—	R	R	R

Note: * Determined by pins MD_2 to MD_0.

MDCR is an 8-bit read-only register that indicates the current operating mode of the H8S/2357 Group.

Bit 7—Reserved: This bit cannot be modified and is always read as 1.

Bits 6 to 3—Reserved: These bits cannot be modified and are always read as 0.

Bits 2 to 0—Mode Select 2 to 0 (MDS2 to MDS0): These bits indicate the input levels at pins MD_2 to MD_0 (the current operating mode). Bits MDS2 to MDS0 correspond to MD_2 to MD_0. MDS2 to MDS0 are read-only bits, they cannot be written to. The mode pin (MD_2 to MD_0) input levels are latched into these bits when MDCR is read. These latches are canceled by a power-on reset, but are retained after a manual reset.*

Note: * Manual reset is only supported in the H8S/2357 ZTAT.

3.2.2 System Control Register (SYSCR)

Bit	:	7	6	5	4	3	2	1	0
		—	—	INTM1	INTM0	NMIEG	—	—	RAME
Initial value	:	0	0	0	0	0	0	0	1
R/W	:	R/W	—	R/W	R/W	R/W	—*	R/W	R/W

Note: * R/W in the H8S/2390, H8S/2392, H8S/2394, and H8S/2398.

Bit 7—Reserved: Only 0 should be written to this bit.

Bit 6—Reserved: This bit cannot be modified and is always read as 0.

Bits 5 and 4—Interrupt Control Mode 1 and 0 (INTM1, INTM0): These bits select the control mode of the interrupt controller. For details of the interrupt control modes, see section 5.4.1, Interrupt Control Modes and Interrupt Operation.

Bit 5 INTM1	Bit 4 INTM0	Interrupt Control Mode	Description	
0	0	0	Control of interrupts by I bit	(Initial value)
	1	—	Setting prohibited	
1	0	2	Control of interrupts by I2 to I0 bits and IPR	
	1	—	Setting prohibited	

Bit 3—NMI Edge Select (NMIEG): Selects the valid edge of the NMI interrupt input.

Bit 3 NMIEG	Description	
0	An interrupt is requested at the falling edge of NMI input	(Initial value)
1	An interrupt is requested at the rising edge of NMI input	

Bit 2—Reserved: This bit cannot be modified and is always read as 0.
This bit is reserved in the H8S/2390, H8S/2392, H8S/2394, and H8S/2398. Only 0 should be written to this bit.

Bit 1—Reserved: Only 0 should be written to this bit.

Bit 0—RAM Enable (RAME): Enables or disables the on-chip RAM. The RAME bit is initialized when the reset status is released. It is not initialized in software standby mode.

Bit 0 RAME	Description	
0	On-chip RAM is disabled	
1	On-chip RAM is enabled	(Initial value)

3.2.3 System Control Register 2 (SYSCR2) (F-ZTAT Version Only)

Bit :	7	6	5	4	3	2	1	0
	—	—	—	—	FLSHE	—	—	—
Initial value :	0	0	0	0	0	0	0	0
R/W :	—	—	—	—	R/W	—	—	—

SYSCR2 is an 8-bit readable/writable register that performs on-chip flash memory control.

SYSCR2 is initialized to H'00 by a reset and in hardware standby mode.

SYSCR2 can only be accessed in the F-ZTAT version. In other versions, this register cannot be written to and will return an undefined value if read.

Bits 7 to 4—Reserved: These bits cannot be modified and are always read as 0.

Bit 3—Flash Memory Control Register Enable (FLSHE): Controls CPU access to the flash memory control registers (FLMCR1, FLMCR2, EBR1, and EBR2). For details, see section 19, ROM.

Bit 3 FLSHE	Description
0	Flash control registers are not selected for addresses H'FFFFC8 to H'FFFFCB (Initial value)
1	Flash control registers are selected for addresses H'FFFFC8 to H'FFFFCB

Bits 2 to 0—Reserved: These bits cannot be modified and are always read as 0.

3.3 Operating Mode Descriptions

3.3.1 Mode 1

Mode 1 is not supported in this LSI, and must not be set.

3.3.2 Mode 2 (H8S/2398 F-ZTAT Only)

This is a flash memory boot mode. For details, see section 19, ROM.

MCU operation is the same as in mode 6.

3.3.3 Mode 3 (H8S/2398 F-ZTAT Only)

This is a flash memory boot mode. For details, see section 19, ROM.

MCU operation is the same as in mode 7.

3.3.4 Mode 4 (On-Chip ROM Disabled Expansion Mode)

The CPU can access a 16-Mbyte address space in advanced mode. The on-chip ROM is disabled.

Ports A, B and C function as an address bus, ports D and E function as a data bus, and part of port F carries bus control signals.

The initial bus mode after a reset is 16 bits, with 16-bit access to all areas. However, note that if 8-bit access is designated by the bus controller for all areas, the bus mode switches to 8 bits.

3.3.5 Mode 5 (On-Chip ROM Disabled Expansion Mode)

The CPU can access a 16-Mbyte address space in advanced mode. The on-chip ROM is disabled.

Ports A, B and C function as an address bus, ports D and E function as a data bus, and part of port F carries bus control signals.

The initial bus mode after a reset is 8 bits, with 8-bit access to all areas. However, note that if at least one area is designated for 16-bit access by the bus controller, the bus mode switches to 16 bits and port E becomes a data bus.

3.3.6 Mode 6 (On-Chip ROM Enabled Expansion Mode)

The CPU can access a 16-Mbyte address space in advanced mode. The on-chip ROM is enabled.

Ports A, B and C function as input ports immediately after a reset. They can each be set to output addresses by setting the corresponding bits in the data direction register (DDR) to 1. Port D functions as a data bus, and part of port F carries bus control signals.

The initial bus mode after a reset is 8 bits, with 8-bit access to all areas. However, note that if at least one area is designated for 16-bit access by the bus controller, the bus mode switches to 16 bits and port E becomes a data bus.

3.3.7 Mode 7 (Single-Chip Mode)

The CPU can access a 16-Mbyte address space in advanced mode. The on-chip ROM is enabled, but external addresses cannot be accessed.

All I/O ports are available for use as input-output ports.

3.3.8 Modes 8 and 9

Modes 8 and 9 are not supported in the H8S/2357 Group, and must not be set.

3.3.9 Mode 10 (H8S/2357 F-ZTAT Only)

This is a flash memory boot mode. For details, see section 19, ROM.

MCU operation is the same as in mode 6.

3.3.10 Mode 11 (H8S/2357 F-ZTAT Only)

This is a flash memory boot mode. For details, see section 19, ROM.

MCU operation is the same as in mode 7.

3.3.11 Modes 12 and 13 (H8S/2357 F-ZTAT Only)

Modes 12 and 13 are not supported in the H8S/2357 Group, and must not be set.

3.3.12 Mode 14 (H8S/2357 F-ZTAT Only)

This is a flash memory user program mode. For details, see section 19, ROM.

MCU operation is the same as in mode 6.

3.3.13 Mode 15 (H8S/2357 F-ZTAT Only)

This is a flash memory user program mode. For details, see section 19, ROM.

MCU operation is the same as in mode 7.

3.4 Pin Functions in Each Operating Mode

The pin functions of ports A to F vary depending on the operating mode. Table 3-4 shows their functions in each operating mode.

Table 3-4 Pin Functions in Each Mode

Port		Mode 2*[4]	Mode 3*[4]	Mode 4*[2]	Mode 5*[2]	Mode 6	Mode 7	Mode 10*[3]	Mode 11*[3]	Mode 14*[3]	Mode 15*[3]
Port A	PA_7 to PA_5	P*[1]/A	P	P*[1]/A	P*[1]/A	P*[1]/A	P	P*[1]/A	P	P*[1]/A	P
	PA_4 to PA_0			A	A						
Port B		P*[1]/A	P	A	A	P*[1]/A	P	P*[1]/A	P	P*[1]/A	P
Port C		P*[1]/A	P	A	A	P*[1]/A	P	P*[1]/A	P	P*[1]/A	P
Port D		D	P	D	D	D	P	D	P	D	P
Port E		P*[1]/D	P	P/D*[1]	P*[1]/D	P*[1]/D	P	P*[1]/D	P	P*[1]/D	P
Port F	PF_7	P/C*[1]	P/C*[1]	P/C*[1]	P/C*[1]	P/C*[1]	P*[1]/C	P/C*[1]	P*[1]/C	P/C*[1]	P*[1]/C
	PF_6 to PF_3	C	P	C	C	C	P	C	P	C	P
	PF_2 to PF_0	P*[1]/C		P*[1]/C	P*[1]/C	P*[1]/C		P*[1]/C		P*[1]/C	

Legend:

P: I/O port

A: Address bus output

D: Data bus I/O

C: Control signals, clock I/O

Notes:
1. After reset
2. In ROMless version, only modes 4 and 5 are available.
3. Applies to the H8S/2357 F-ZTAT only.
4. Applies to the H8S/2398 F-ZTAT only.

3.5 Memory Map in Each Operating Mode

Figures 3-1 to 3-5 show memory maps for each of the operating modes.

The address space is 16 Mbytes in modes 4 to 7.

The address space is divided into eight areas for modes 4 to 7. For details, see section 6, Bus Controller.

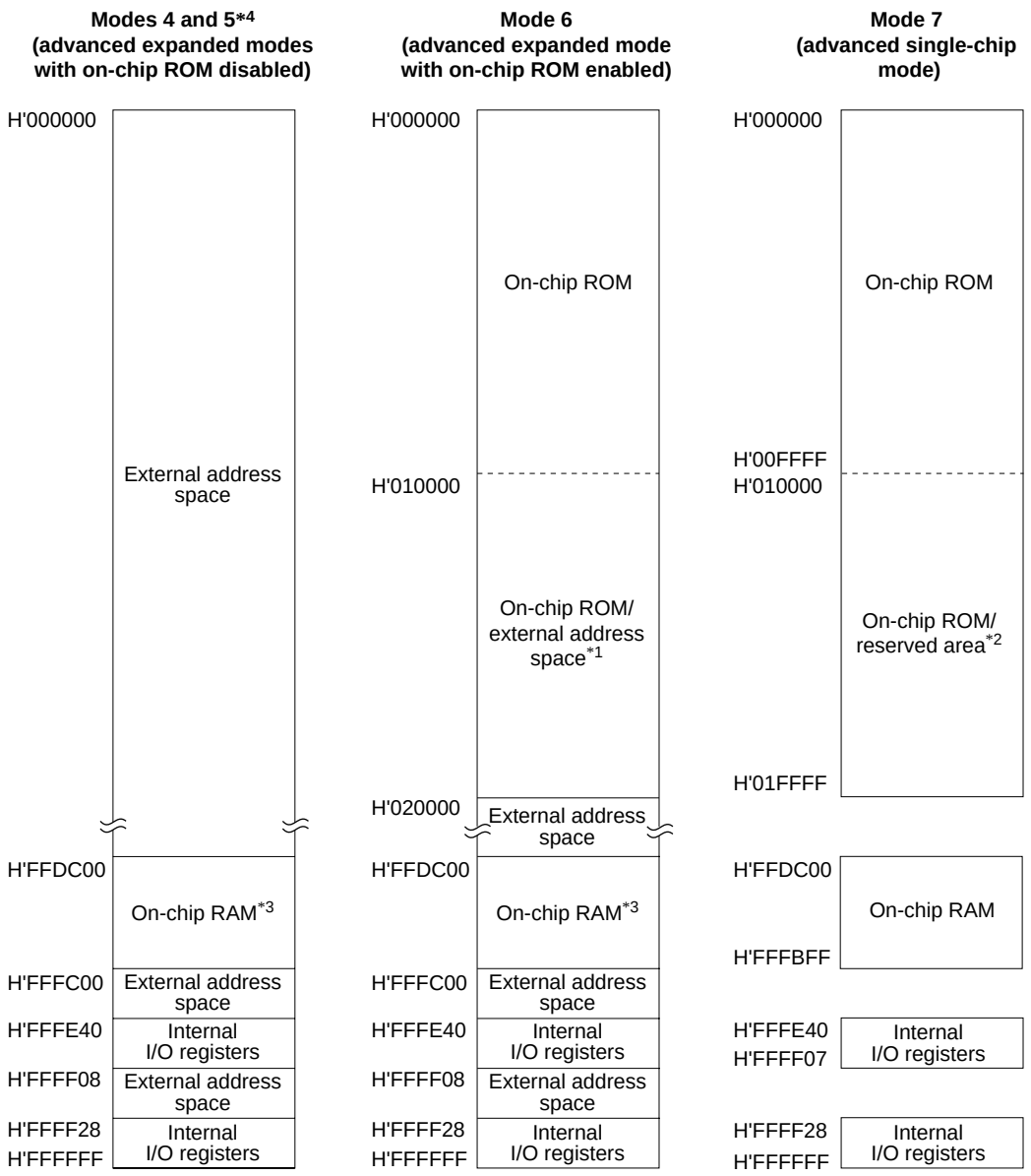

Notes: 1. External addresses when EAE = 1 in BCRL; on-chip ROM when EAE = 0.
2. Reserved area when EAE = 1 in BCRL; on-chip ROM when EAE = 0.
3. External addresses can be accessed by clearing the RAME bit in SYSCR to 0.
4. Only modes 4 and 5 are provided in the H8S/2352.

Figure 3-1 Memory Map in Each Operating Mode (H8S/2357, H8S/2352) (1)

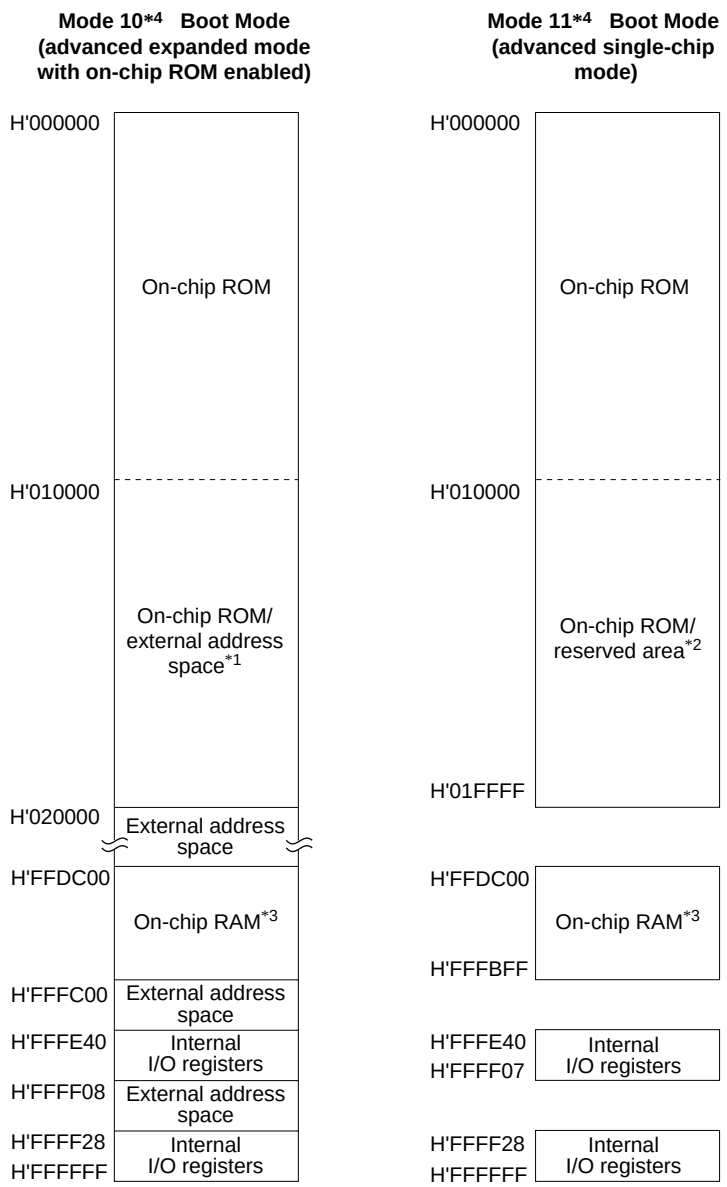

Notes: 1. External addresses when EAE = 1 in BCRL; on-chip ROM when EAE = 0.
2. Reserved area when EAE = 1 in BCRL; on-chip ROM when EAE = 0.
3. On-chip RAM is used for flash memory programming. Do not clear the RAME bit to 0 in SYSCR.
4. Modes 10 and 11 are provided in the F-ZTAT version only.

Figure 3-1 Memory Map in Each Operating Mode (H8S/2357, H8S/2352) (2)

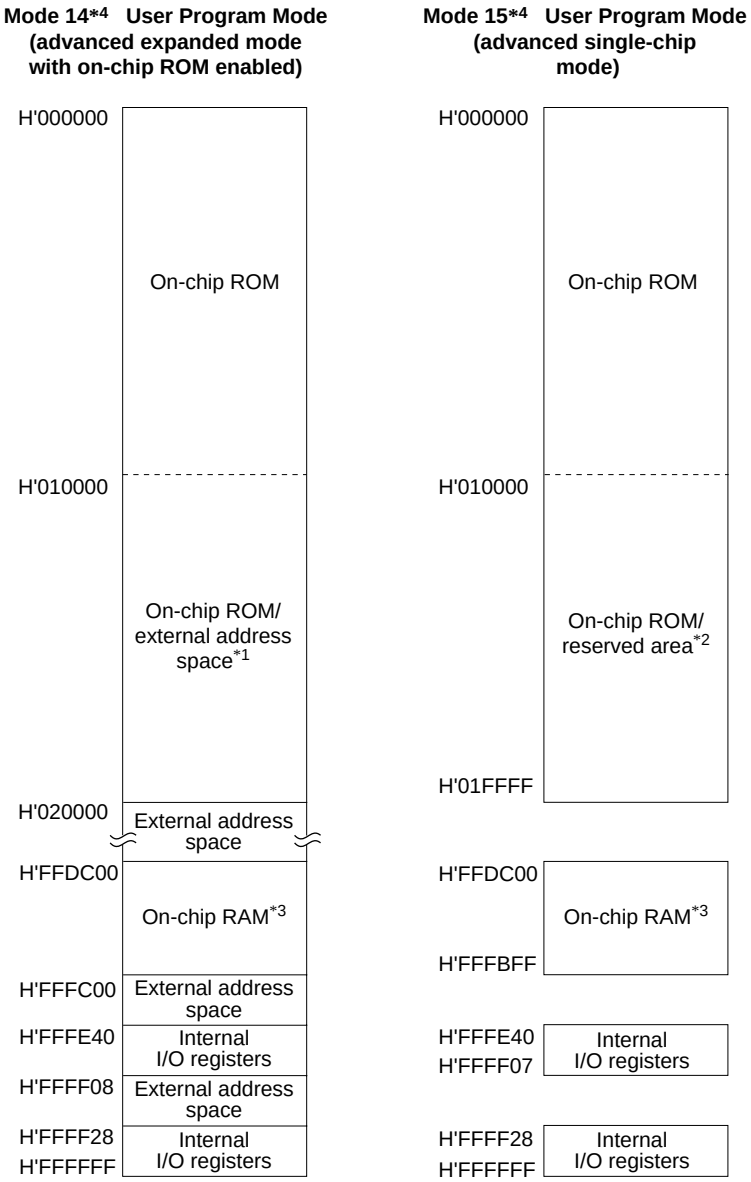

Notes: 1. External addresses when EAE = 1 in BCRL; on-chip ROM when EAE = 0.
2. Reserved area when EAE = 1 in BCRL; on-chip ROM when EAE = 0.
3. On-chip RAM is used for flash memory programming. Do not clear the RAME bit to 0 in SYSCR.
4. Modes 14 and 15 are provided in the F-ZTAT version only.

Figure 3-1 Memory Map in Each Operating Mode (H8S/2357, H8S/2352) (3)

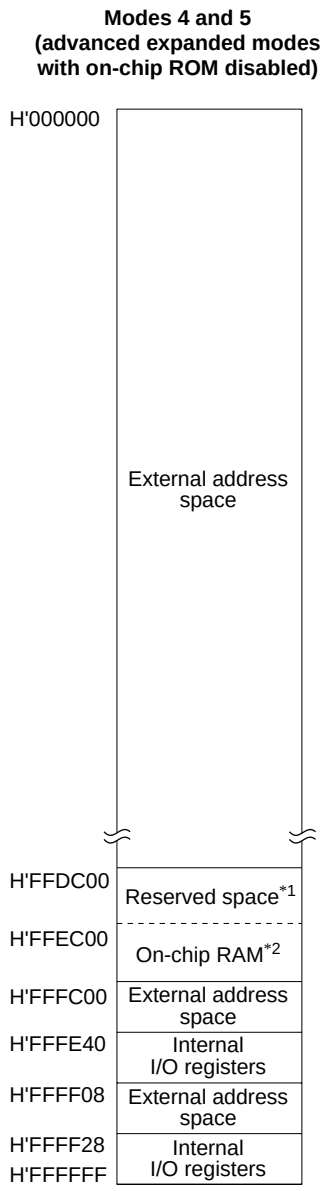

Notes: 1. This is a reserved space. Access to this space is inhibited. The space can be made available for use as an external address space by clearing the RAME bit of the SYSCR to 0.
2. External addresses can be accessed by clearing the RAME bit in SYSCR to 0.

Figure 3-2 Memory Map in Each Operating Mode (H8S/2390)

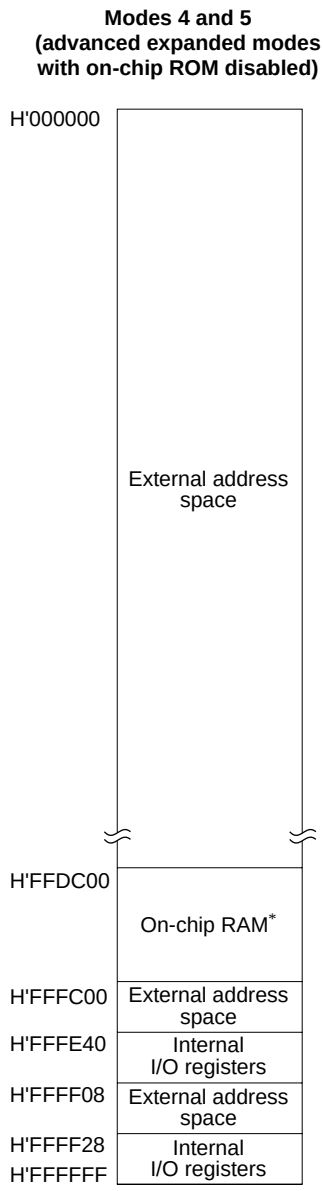

Note: * External addresses can be accessed by clearing the RAME bit in SYSCR to 0.

Figure 3-3 Memory Map in Each Operating Mode (H8S/2392)

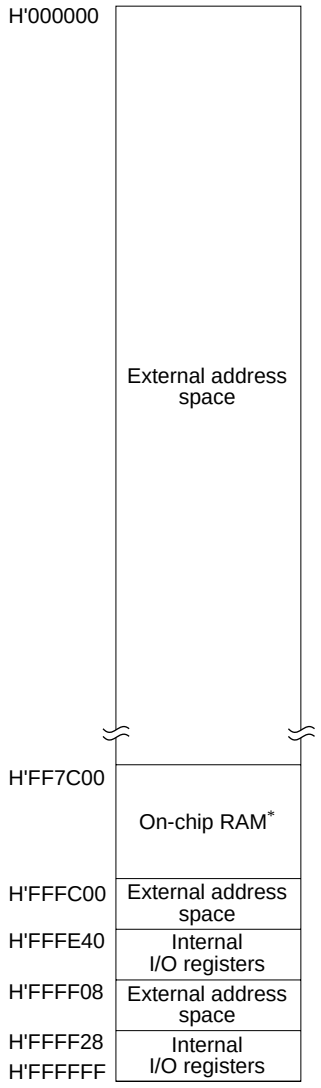

Note: * External addresses can be accessed by clearing the RAME bit in SYSCR to 0.

Figure 3-4 Memory Map in Each Operating Mode (H8S/2394)

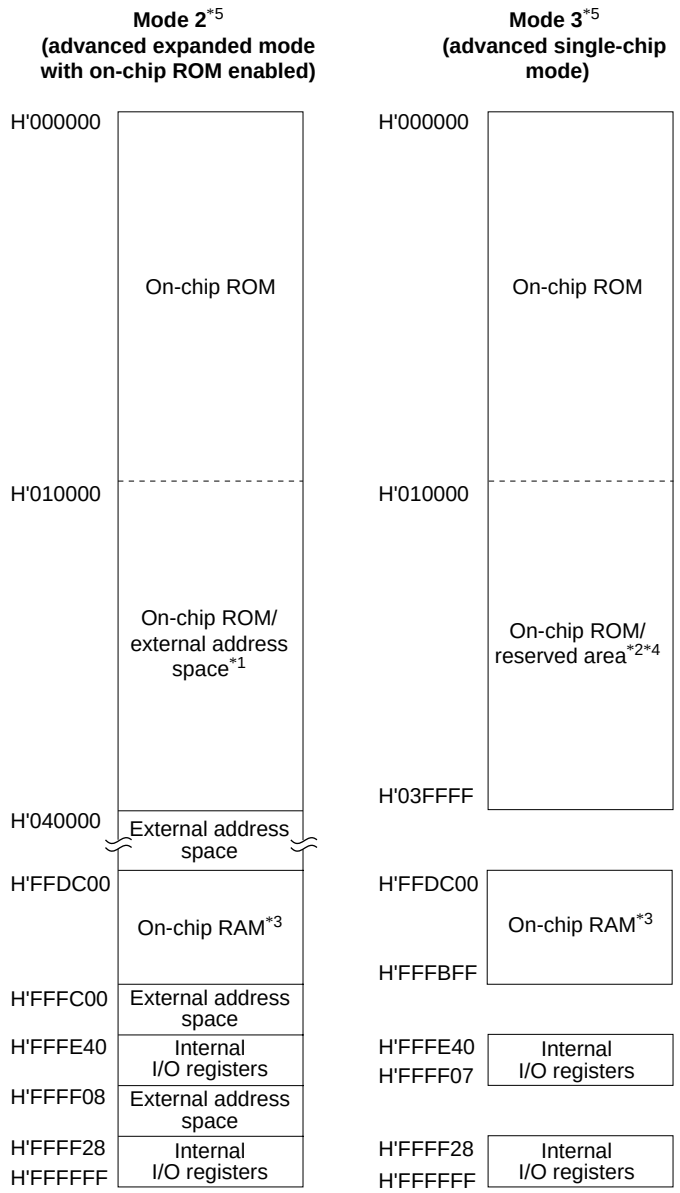

Notes: 1. External addresses when EAE = 1 in BCRL; on-chip ROM when EAE = 0.
2. Reserved area when EAE = 1 in BCRL; on-chip ROM when EAE = 0.
3. The on-chip RAM is used when programming and erasing flash memory. Do not clear the RAME bit in SYSCR to 0.
4. Access to the reserved area is inhibited.
5. Modes 2 and 3 are provided in the F-ZTAT version only.

Figure 3-5 Memory Map in Each Operating Mode (H8S/2398) (1)

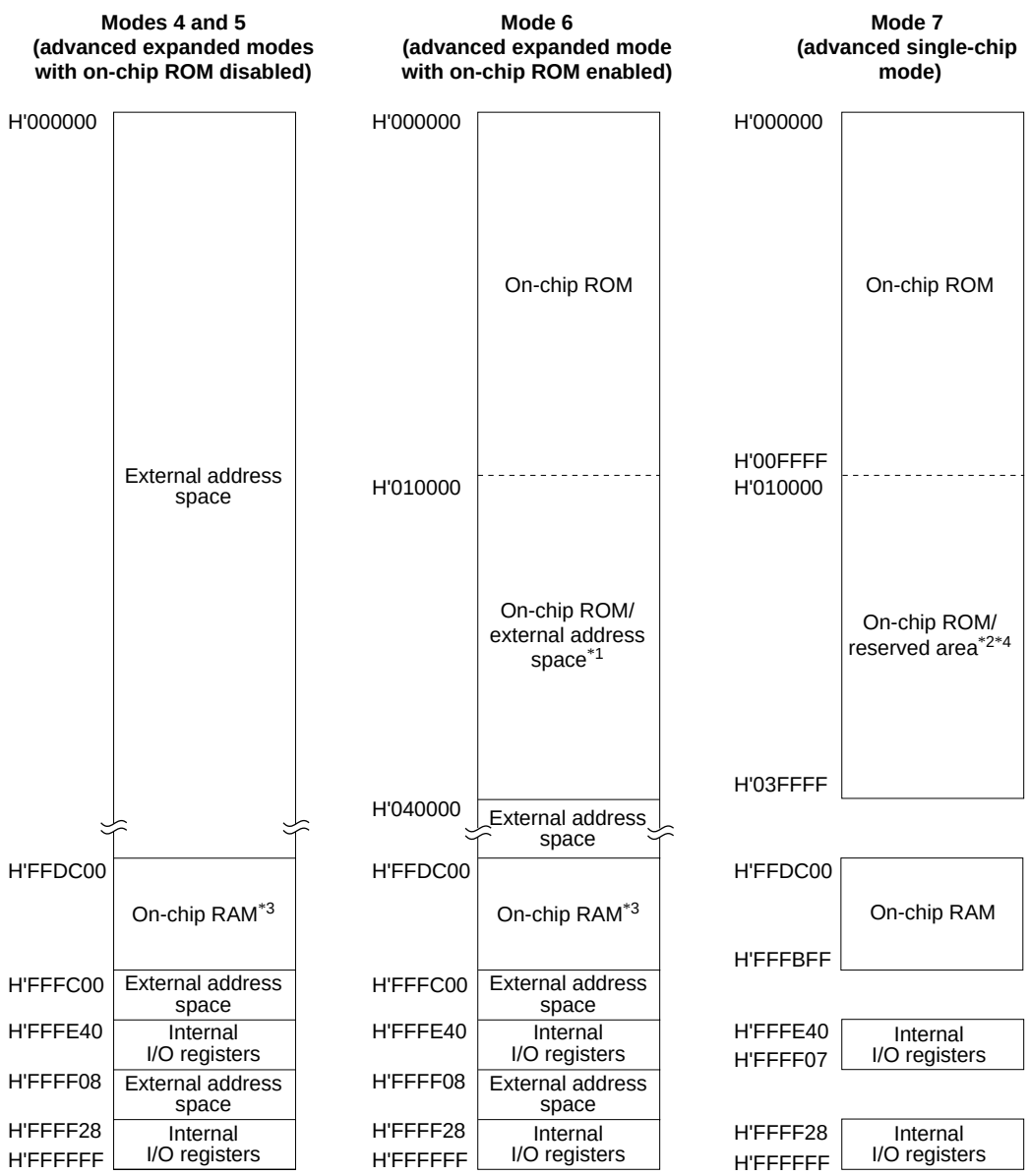

Notes: 1. External addresses when EAE = 1 in BCRL; on-chip ROM when EAE = 0.
2. Reserved area when EAE = 1 in BCRL; on-chip ROM when EAE = 0.
3. External addresses can be accessed by clearing the RAME bit in SYSCR to 0.
4. Access to the reserved area is inhibited.

Figure 3-5 Memory Map in Each Operating Mode (H8S/2398) (2)

Section 4 Exception Handling

4.1 Overview

4.1.1 Exception Handling Types and Priority

As table 4-1 indicates, exception handling may be caused by a reset, trap instruction, or interrupt. Exception handling is prioritized as shown in table 4-1. If two or more exceptions occur simultaneously, they are accepted and processed in order of priority. Trap instruction exceptions are accepted at all times, in the program execution state.

Exception handling sources, the stack structure, and the operation of the CPU vary depending on the interrupt control mode set by the INTM0 and INTM1 bits of SYSCR.

Table 4-1 Exception Types and Priority

Priority	Exception Type	Start of Exception Handling
High	Reset	Starts immediately after a low-to-high transition at the $\overline{\text{RES}}$ pin, or when the watchdog timer overflows. The CPU enters the power-on reset state when the NMI pin is high, or the manual reset*[4] state when the NMI pin is low.
↑	Trace*[1]	Starts when execution of the current instruction or exception handling ends, if the trace (T) bit is set to 1
	Interrupt	Starts when execution of the current instruction or exception handling ends, if an interrupt request has been issued*[2]
Low	Trap instruction (TRAPA)*[3]	Started by execution of a trap instruction (TRAPA)

Notes: 1. Traces are enabled only in interrupt control mode 2. Trace exception handling is not executed after execution of an RTE instruction.
2. Interrupt detection is not performed on completion of ANDC, ORC, XORC, or LDC instruction execution, or on completion of reset exception handling.
3. Trap instruction exception handling requests are accepted at all times in program execution state.
4. Manual reset is only supported in the H8S/2357 ZTAT.

4.1.2 Exception Handling Operation

Exceptions originate from various sources. Trap instructions and interrupts are handled as follows:

1. The program counter (PC), condition code register (CCR), and extended register (EXR) are pushed onto the stack.
2. The interrupt mask bits are updated. The T bit is cleared to 0.
3. A vector address corresponding to the exception source is generated, and program execution starts from that address.

For a reset exception, steps 2 and 3 above are carried out.

4.1.3 Exception Vector Table

The exception sources are classified as shown in figure 4-1. Different vector addresses are assigned to different exception sources.

Table 4-2 lists the exception sources and their vector addresses.

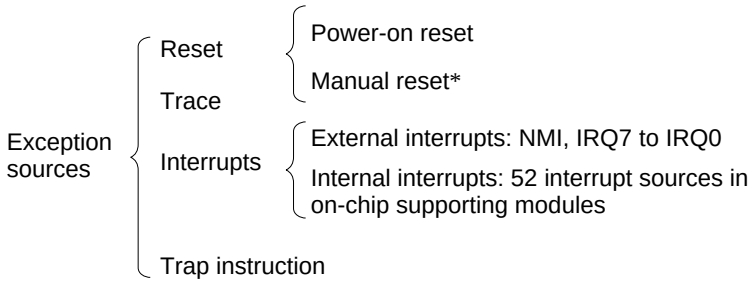

Note: * Manual reset is only supported in the H8S/2357 ZTAT.

Figure 4-1 Exception Sources

In modes 6 and 7 the on-chip ROM available for use after a power-on reset is the 64-kbyte area comprising addresses H'000000 to H'00FFFF. Care is required when setting vector addresses. In this case, clearing the EAE bit in BCRL enables the 128-kbyte (256-kbyte)* area comprising address H'000000 to H'01FFFF (H'03FFFF)* to be used.

Note: * Since these values are different according to the on-chip ROM capacitance, see section 3.5, Memory Map in Each Operating Mode.

Table 4-2 Exception Vector Table

Exception Source		Vector Number	Vector Address*[1] Advanced Mode
Power-on reset		0	H'0000 to H'0003
Manual reset*[3]		1	H'0004 to H'0007
Reserved for system use		2	H'0008 to H'000B
		3	H'000C to H'000F
		4	H'0010 to H'0013
Trace		5	H'0014 to H'0017
Reserved for system use		6	H'0018 to H'001B
External interrupt	NMI	7	H'001C to H'001F
Trap instruction (4 sources)		8	H'0020 to H'0023
		9	H'0024 to H'0027
		10	H'0028 to H'002B
		11	H'002C to H'002F
Reserved for system use		12	H'0030 to H'0033
		13	H'0034 to H'0037
		14	H'0038 to H'003B
		15	H'003C to H'003F
External interrupt	IRQ0	16	H'0040 to H'0043
	IRQ1	17	H'0044 to H'0047
	IRQ2	18	H'0048 to H'004B
	IRQ3	19	H'004C to H'004F
	IRQ4	20	H'0050 to H'0053
	IRQ5	21	H'0054 to H'0057
	IRQ6	22	H'0058 to H'005B
	IRQ7	23	H'005C to H'005F
Internal interrupt*[2]		24 | 91	H'0060 to H'0063 | H'016C to H'016F

Notes: 1. Lower 16 bits of the address.
2. For details of internal interrupt vectors, see section 5.3.3, Interrupt Exception Handling Vector Table.
3. Manual reset is only supported in the H8S/2357 ZTAT.

4.2 Reset

4.2.1 Overview

A reset has the highest exception priority.

When the $\overline{RES}$ pin goes low, all processing halts and the H8S/2357 Group enters the reset state. A reset initializes the internal state of the CPU and the registers of on-chip supporting modules. Immediately after a reset, interrupt control mode 0 is set.

Reset exception handling begins when the $\overline{RES}$ pin changes from low to high.

In the F-ZTAT, masked ROM, and ROMless versions, a reset is always a power-on reset, regardless of the NMI pin level at the time. Also, a reset caused by the watchdog timer is always a power-on reset, regardless of the setting of the RSTS bit in the RSTCR register.

In the ZTAT version, a reset may be either a power-on reset or a manual reset*, according to the NMI pin level at the time. A reset caused by the watchdog timer, also, may be either a power-on reset or a manual reset*.

For details see section 13, Watchdog Timer.

Note: * Manual reset is only supported in the H8S/2357 ZTAT.

4.2.2 Reset Types

A reset can be of either of two types: a power-on reset or a manual reset*. Reset types are shown in table 4-3. A power-on reset should be used when powering on.

The internal state of the CPU is initialized by either type of reset. A power-on reset also initializes all the registers in the on-chip supporting modules, while a manual reset* initializes all the registers in the on-chip supporting modules except for the bus controller and I/O ports, which retain their previous states.
With a manual reset*, since the on-chip supporting modules are initialized, ports used as on-chip supporting module I/O pins are switched to I/O ports controlled by DDR and DR.

Table 4-3 Reset Types

	Reset Transition Conditions		Internal State	
Type	**NMI**	**$\overline{RES}$**	**CPU**	**On-Chip Supporting Modules**
Power-on reset	High	Low	Initialized	Initialized
Manual reset*	Low	Low	Initialized	Initialized, except for bus controller and I/O ports

A reset caused by the watchdog timer can also be of either of two types: a power-on reset or a manual reset*.

Note: * Manual reset is only supported in the H8S/2357 ZTAT.

4.2.3 Reset Sequence

The H8S/2357 Group enters the reset state when the $\overline{RES}$ pin goes low.

To ensure that the H8S/2357 Group is reset, hold the $\overline{RES}$ pin low for at least 20 ms at power-up. To reset the H8S/2357 Group during operation, hold the $\overline{RES}$ pin low for at least 20 states.

When the $\overline{RES}$ pin goes high after being held low for the necessary time, the H8S/2357 Group starts reset exception handling as follows:

1. The internal state of the CPU and the registers of the on-chip supporting modules are initialized, the T bit is cleared to 0 in EXR, and the I bit is set to 1 in EXR and CCR.
2. The reset exception handling vector address is read and transferred to the PC, and program execution starts from the address indicated by the PC.

Figure 4-2 show examples of the reset sequence.

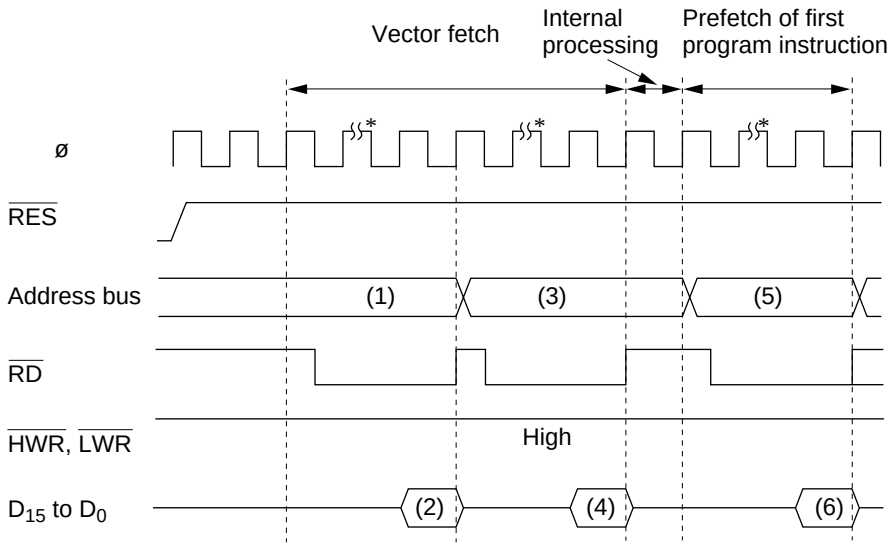

(1) (3) Reset exception handling vector address ((1) = H'000000, (3) = H'000002)
(2) (4) Start address (contents of reset exception handling vector address)
(5) Start address ((5) = (2) (4))
(6) First program instruction

Note: * 3 program wait states are inserted.

Figure 4-2 Reset Sequence (Mode 4)

4.2.4 Interrupts after Reset

If an interrupt is accepted after a reset but before the stack pointer (SP) is initialized, the PC and CCR will not be saved correctly, leading to a program crash. To prevent this, all interrupt requests, including NMI, are disabled immediately after a reset. Since the first instruction of a program is always executed immediately after the reset state ends, make sure that this instruction initializes the stack pointer (example: MOV.L #xx:32, SP).

4.2.5 State of On-Chip Supporting Modules after Reset Release

After reset release, MSTPCR is initialized to H'3FFF and all modules except the DMAC and DTC enter module stop mode. Consequently, on-chip supporting module registers cannot be read or written to. Register reading and writing is enabled when module stop mode is exited.

4.3 Traces

Traces are enabled in interrupt control mode 2. Trace mode is not activated in interrupt control mode 0, irrespective of the state of the T bit. For details of interrupt control modes, see section 5, Interrupt Controller.

If the T bit in EXR is set to 1, trace mode is activated. In trace mode, a trace exception occurs on completion of each instruction.

Trace mode is canceled by clearing the T bit in EXR to 0. It is not affected by interrupt masking.

Table 4-4 shows the state of CCR and EXR after execution of trace exception handling.

Interrupts are accepted even within the trace exception handling routine.

The T bit saved on the stack retains its value of 1, and when control is returned from the trace exception handling routine by the RTE instruction, trace mode resumes.

Trace exception handling is not carried out after execution of the RTE instruction.

Table 4-4 Status of CCR and EXR after Trace Exception Handling

	CCR		EXR	
Interrupt Control Mode	**I**	**UI**	**I2 to I0**	**T**
0	Trace exception handling cannot be used.			
2	1	—	—	0

Legend:
1: Set to 1
0: Cleared to 0
—: Retains value prior to execution.

4.4 Interrupts

Interrupt exception handling can be requested by nine external sources (NMI, IRQ7 to IRQ0) and 52 internal sources in the on-chip supporting modules. Figure 4-3 classifies the interrupt sources and the number of interrupts of each type.

The on-chip supporting modules that can request interrupts include the watchdog timer (WDT), refresh timer, 16-bit timer-pulse unit (TPU), 8-bit timer, serial communication interface (SCI), data transfer controller (DTC), DMA controller (DMAC), and A/D converter. Each interrupt source has a separate vector address.

NMI is the highest-priority interrupt. Interrupts are controlled by the interrupt controller. The interrupt controller has two interrupt control modes and can assign interrupts other than NMI to eight priority/mask levels to enable multiplexed interrupt control.

For details of interrupts, see section 5, Interrupt Controller.

- Interrupts
  - External interrupts
    - NMI (1)
    - IRQ7 to IRQ0 (8)
  - Internal interrupts
    - WDT*1 (1)
    - Refresh timer*2 (1)
    - TPU (26)
    - 8-bit timer (6)
    - SCI (12)
    - DTC (1)
    - DMAC (4)
    - A/D converter (1)

Notes: Numbers in parentheses are the numbers of interrupt sources.
1. When the watchdog timer is used as an interval timer, it generates an interrupt request at each counter overflow.
2. When the refresh timer is used as an interval timer, it generates an interrupt request at each compare match.

Figure 4-3 Interrupt Sources and Number of Interrupts

4.5 Trap Instruction

Trap instruction exception handling starts when a TRAPA instruction is executed. Trap instruction exception handling can be executed at all times in the program execution state.

The TRAPA instruction fetches a start address from a vector table entry corresponding to a vector number from 0 to 3, as specified in the instruction code.

Table 4-5 shows the status of CCR and EXR after execution of trap instruction exception handling.

Table 4-5 Status of CCR and EXR after Trap Instruction Exception Handling

	CCR		EXR	
Interrupt Control Mode	**I**	**UI**	**I2 to I0**	**T**
0	1	—	—	—
2	1	—	—	0

Legend:
1: Set to 1
0: Cleared to 0
—: Retains value prior to execution.

4.6 Stack Status after Exception Handling

Figure 4-4 shows the stack after completion of trap instruction exception handling and interrupt exception handling.

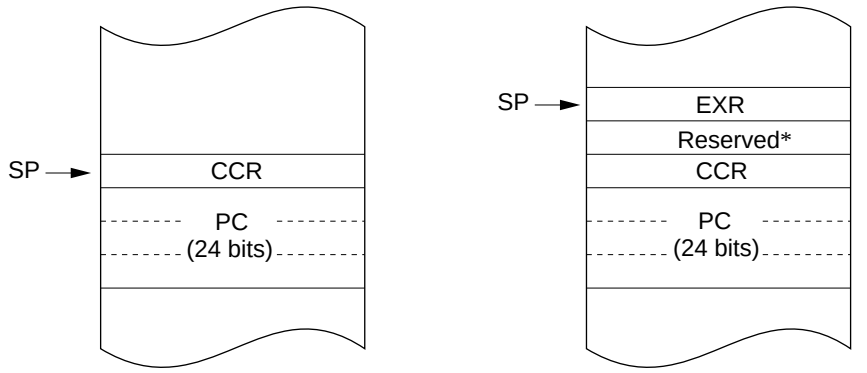

(a) Interrupt control mode 0

(b) Interrupt control mode 2

Note: * Ignored on return.

Figure 4-4 Stack Status after Exception Handling (Advanced Modes)

4.7 Notes on Use of the Stack

When accessing word data or longword data, the H8S/2357 Group assumes that the lowest address bit is 0. The stack should always be accessed by word transfer instruction or longword transfer instruction, and the value of the stack pointer (SP, ER7) should always be kept even. Use the following instructions to save registers:

```
PUSH.W   Rn    (or MOV.W Rn, @-SP)
PUSH.L   ERn   (or MOV.L ERn, @-SP)
```

Use the following instructions to restore registers:

```
POP.W    Rn    (or MOV.W @SP+, Rn)
POP.L    ERn   (or MOV.L @SP+, ERn)
```

Setting SP to an odd value may lead to a malfunction. Figure 4-5 shows an example of what happens when the SP value is odd.

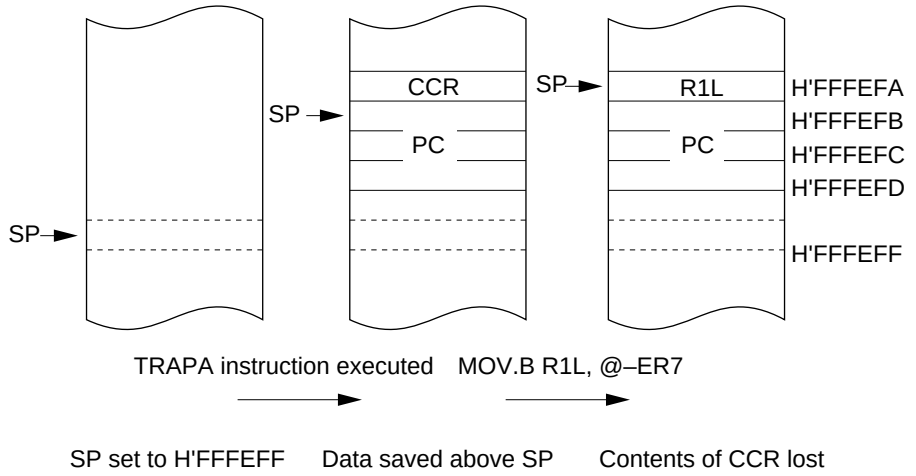

Legend:
CCR: Condition code register
PC: Program counter
R1L: General register R1L
SP: Stack pointer

Note: This diagram illustrates an example in which the interrupt control mode is 0, in advanced mode.

Figure 4-5 Operation when SP Value is Odd

Section 5 Interrupt Controller

5.1 Overview

5.1.1 Features

The H8S/2357 Group controls interrupts by means of an interrupt controller. The interrupt controller has the following features:

- Two interrupt control modes
  - — Any of two interrupt control modes can be set by means of the INTM1 and INTM0 bits in the system control register (SYSCR).
- Priorities settable with IPR
  - — An interrupt priority register (IPR) is provided for setting interrupt priorities. Eight priority levels can be set for each module for all interrupts except NMI.
  - — NMI is assigned the highest priority level of 8, and can be accepted at all times.
- Independent vector addresses
  - — All interrupt sources are assigned independent vector addresses, making it unnecessary for the source to be identified in the interrupt handling routine.
- Nine external interrupts
  - — NMI is the highest-priority interrupt, and is accepted at all times. Rising edge or falling edge can be selected for NMI.
  - — Falling edge, rising edge, or both edge detection, or level sensing, can be selected for IRQ7 to IRQ0.
- DTC and DMAC control
  - — DTC and DMAC activation is performed by means of interrupts.

5.1.2 Block Diagram

A block diagram of the interrupt controller is shown in Figure 5-1.

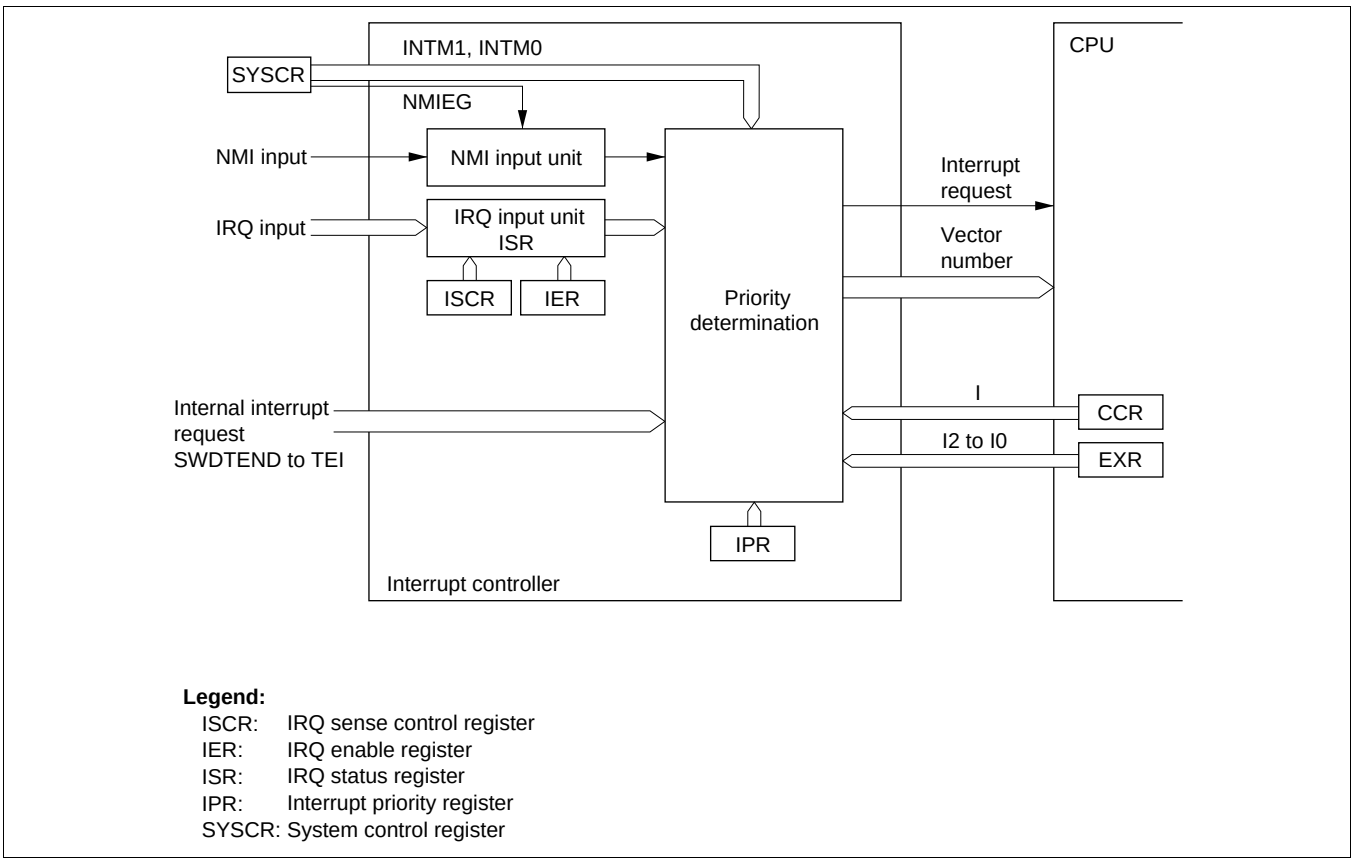

Figure 5-1 Block Diagram of Interrupt Controller

5.1.3 Pin Configuration

Table 5-1 summarizes the pins of the interrupt controller.

Table 5-1 Interrupt Controller Pins

Name	Symbol	I/O	Function
Nonmaskable interrupt	NMI	Input	Nonmaskable external interrupt; rising or falling edge can be selected
External interrupt requests 7 to 0	$\overline{\text{IRQ7}}$ to $\overline{\text{IRQ0}}$	Input	Maskable external interrupts; rising, falling, or both edges, or level sensing, can be selected

5.1.4 Register Configuration

Table 5-2 summarizes the registers of the interrupt controller.

Table 5-2 Interrupt Controller Registers

Name	Abbreviation	R/W	Initial Value	Address*[1]
System control register	SYSCR	R/W	H'01	H'FF39
IRQ sense control register H	ISCRH	R/W	H'00	H'FF2C
IRQ sense control register L	ISCRL	R/W	H'00	H'FF2D
IRQ enable register	IER	R/W	H'00	H'FF2E
IRQ status register	ISR	R/(W)*[2]	H'00	H'FF2F
Interrupt priority register A	IPRA	R/W	H'77	H'FEC4
Interrupt priority register B	IPRB	R/W	H'77	H'FEC5
Interrupt priority register C	IPRC	R/W	H'77	H'FEC6
Interrupt priority register D	IPRD	R/W	H'77	H'FEC7
Interrupt priority register E	IPRE	R/W	H'77	H'FEC8
Interrupt priority register F	IPRF	R/W	H'77	H'FEC9
Interrupt priority register G	IPRG	R/W	H'77	H'FECA
Interrupt priority register H	IPRH	R/W	H'77	H'FECB
Interrupt priority register I	IPRI	R/W	H'77	H'FECC
Interrupt priority register J	IPRJ	R/W	H'77	H'FECD
Interrupt priority register K	IPRK	R/W	H'77	H'FECE

Notes: 1. Lower 16 bits of the address.
2. Can only be written with 0 for flag clearing.

5.2 Register Descriptions

5.2.1 System Control Register (SYSCR)

Bit	:	7	6	5	4	3	2	1	0
		—	—	INTM1	INTM0	NMIEG	—	—	RAME
Initial value	:	0	0	0	0	0	0	0	1
R/W	:	R/W	—	R/W	R/W	R/W	—*	R/W	R/W

Note: * R/W in the H8S/2390, H8S/2392, H8S/2394, and H8S/2398.

SYSCR is an 8-bit readable/writable register that selects the interrupt control mode, and the detected edge for NMI.

Only bits 5 to 3 are described here; for details of the other bits, see section 3.2.2, System Control Register (SYSCR).

SYSCR is initialized to H'01 by a reset and in hardware standby mode. It is not initialized in software standby mode.

Bits 5 and 4—Interrupt Control Mode 1 and 0 (INTM1, INTM0): These bits select one of two interrupt control modes for the interrupt controller.

Bit 5 INTM1	Bit 4 INTM0	Interrupt Control Mode	Description	
0	0	0	Interrupts are controlled by I bit	(Initial value)
	1	—	Setting prohibited	
1	0	2	Interrupts are controlled by bits I2 to I0, and IPR	
	1	—	Setting prohibited	

Bit 3—NMI Edge Select (NMIEG): Selects the input edge for the NMI pin.

Bit 3 NMIEG	Description	
0	Interrupt request generated at falling edge of NMI input	(Initial value)
1	Interrupt request generated at rising edge of NMI input	

5.2.2 Interrupt Priority Registers A to K (IPRA to IPRK)

Bit :	7	6	5	4	3	2	1	0
	—	IPR6	IPR5	IPR4	—	IPR2	IPR1	IPR0
Initial value :	0	1	1	1	0	1	1	1
R/W :	—	R/W	R/W	R/W	—	R/W	R/W	R/W

The IPR registers are eleven 8-bit readable/writable registers that set priorities (levels 7 to 0) for interrupts other than NMI.

The correspondence between IPR settings and interrupt sources is shown in table 5-3.

The IPR registers set a priority (levels 7 to 0) for each interrupt source other than NMI.

The IPR registers are initialized to H'77 by a reset and in hardware standby mode.

Bits 7 and 3—Reserved: These bits cannot be modified and are always read as 0.

Table 5-3 Correspondence between Interrupt Sources and IPR Settings

	Bits	
Register	**6 to 4**	**2 to 0**
IPRA	IRQ0	IRQ1
IPRB	IRQ2 IRQ3	IRQ4 IRQ5
IPRC	IRQ6 IRQ7	DTC
IPRD	Watchdog timer	Refresh timer
IPRE	—*	A/D converter
IPRF	TPU channel 0	TPU channel 1
IPRG	TPU channel 2	TPU channel 3
IPRH	TPU channel 4	TPU channel 5
IPRI	8-bit timer channel 0	8-bit timer channel 1
IPRJ	DMAC	SCI channel 0
IPRK	SCI channel 1	SCI channel 2

Note: * Reserved bits. These bits cannot be modified and are always read as 1.

As shown in table 5-3, multiple interrupts are assigned to one IPR. Setting a value in the range from H'0 to H'7 in the 3-bit groups of bits 6 to 4 and 2 to 0 sets the priority of the corresponding interrupt. The lowest priority level, level 0, is assigned by setting H'0, and the highest priority level, level 7, by setting H'7.

When interrupt requests are generated, the highest-priority interrupt according to the priority levels set in the IPR registers is selected. This interrupt level is then compared with the interrupt mask level set by the interrupt mask bits (I2 to I0) in the extend register (EXR) in the CPU, and if the priority level of the interrupt is higher than the set mask level, an interrupt request is issued to the CPU.

5.2.3 IRQ Enable Register (IER)

Bit :	7	6	5	4	3	2	1	0
	IRQ7E	IRQ6E	IRQ5E	IRQ4E	IRQ3E	IRQ2E	IRQ1E	IRQ0E
Initial value :	0	0	0	0	0	0	0	0
R/W :	R/W	R/W	R/W	R/W	R/W	R/W	R/W	R/W

IER is an 8-bit readable/writable register that controls enabling and disabling of interrupt requests IRQ7 to IRQ0.

IER is initialized to H'00 by a reset and in hardware standby mode.

Bits 7 to 0—IRQ7 to IRQ0 Enable (IRQ7E to IRQ0E): These bits select whether IRQ7 to IRQ0 are enabled or disabled.

Bit n IRQnE	**Description**	
0	IRQn interrupts disabled	(Initial value)
1	IRQn interrupts enabled	

(n = 7 to 0)

5.2.4 IRQ Sense Control Registers H and L (ISCRH, ISCRL)

ISCRH

Bit :	15	14	13	12	11	10	9	8
	IRQ7SCB	IRQ7SCA	IRQ6SCB	IRQ6SCA	IRQ5SCB	IRQ5SCA	IRQ4SCB	IRQ4SCA
Initial value :	0	0	0	0	0	0	0	0
R/W :	R/W	R/W	R/W	R/W	R/W	R/W	R/W	R/W

ISCRL

Bit :	7	6	5	4	3	2	1	0
	IRQ3SCB	IRQ3SCA	IRQ2SCB	IRQ2SCA	IRQ1SCB	IRQ1SCA	IRQ0SCB	IRQ0SCA
Initial value :	0	0	0	0	0	0	0	0
R/W :	R/W	R/W	R/W	R/W	R/W	R/W	R/W	R/W

ISCR registers are 16-bit readable/writable registers that select rising edge, falling edge, or both edge detection, or level sensing, for the input at pins $\overline{\text{IRQ7}}$ to $\overline{\text{IRQ0}}$.

ISCR registers are initialized to H'0000 by a reset and in hardware standby mode.

Bits 15 to 0: IRQ7 Sense Control A and B (IRQ7SCA, IRQ7SCB) to IRQ0 Sense Control A and B (IRQ0SCA, IRQ0SCB)

Bits 15 to 0		
IRQ7SCB to IRQ0SCB	**IRQ7SCA to IRQ0SCA**	**Description**
0	0	Interrupt request generated at $\overline{\text{IRQ7}}$ to $\overline{\text{IRQ0}}$ input low level (Initial value)
	1	Interrupt request generated at falling edge of $\overline{\text{IRQ7}}$ to $\overline{\text{IRQ0}}$ input
1	0	Interrupt request generated at rising edge of $\overline{\text{IRQ7}}$ to $\overline{\text{IRQ0}}$ input
	1	Interrupt request generated at both falling and rising edges of $\overline{\text{IRQ7}}$ to $\overline{\text{IRQ0}}$ input

5.2.5 IRQ Status Register (ISR)

Bit :	7	6	5	4	3	2	1	0
	IRQ7F	IRQ6F	IRQ5F	IRQ4F	IRQ3F	IRQ2F	IRQ1F	IRQ0F
Initial value :	0	0	0	0	0	0	0	0
R/W :	R/(W)*	R/(W)*	R/(W)*	R/(W)*	R/(W)*	R/(W)*	R/(W)*	R/(W)*

Note: * Only 0 can be written, to clear the flag.

ISR is an 8-bit readable/writable register that indicates the status of IRQ7 to IRQ0 interrupt requests.

ISR is initialized to H'00 by a reset and in hardware standby mode.

Bits 7 to 0—IRQ7 to IRQ0 flags (IRQ7F to IRQ0F): These bits indicate the status of IRQ7 to IRQ0 interrupt requests.

Bit n IRQnF	Description
0	[Clearing conditions] (Initial value) • Cleared by reading IRQnF flag when IRQnF = 1, then writing 0 to IRQnF flag • When interrupt exception handling is executed when low-level detection is set (IRQnSCB = IRQnSCA = 0) and $\overline{\text{IRQn}}$ input is high • When IRQn interrupt exception handling is executed when falling, rising, or both-edge detection is set (IRQnSCB = 1 or IRQnSCA = 1) • When the DTC is activated by an IRQn interrupt, and the DISEL bit in MRB of the DTC is cleared to 0
1	[Setting conditions] • When $\overline{\text{IRQn}}$ input goes low when low-level detection is set (IRQnSCB = IRQnSCA = 0) • When a falling edge occurs in $\overline{\text{IRQn}}$ input when falling edge detection is set (IRQnSCB = 0, IRQnSCA = 1) • When a rising edge occurs in $\overline{\text{IRQn}}$ input when rising edge detection is set (IRQnSCB = 1, IRQnSCA = 0) • When a falling or rising edge occurs in $\overline{\text{IRQn}}$ input when both-edge detection is set (IRQnSCB = IRQnSCA = 1)

(n = 7 to 0)

5.3 Interrupt Sources

Interrupt sources comprise external interrupts (NMI and IRQ7 to IRQ0) and internal interrupts (52 sources).

5.3.1 External Interrupts

There are nine external interrupts: NMI and IRQ7 to IRQ0. Of these, NMI and IRQ2 to IRQ0 can be used to restore the H8S/2357 Group from software standby mode.

NMI Interrupt: NMI is the highest-priority interrupt, and is always accepted by the CPU regardless of the status of the CPU interrupt mask bits. The NMIEG bit in SYSCR can be used to select whether an interrupt is requested at a rising edge or a falling edge on the $\overline{\text{NMI}}$ pin.

The vector number for NMI interrupt exception handling is 7.

IRQ7 to IRQ0 Interrupts: Interrupts IRQ7 to IRQ0 are requested by an input signal at pins $\overline{\text{IRQ7}}$ to $\overline{\text{IRQ0}}$. Interrupts IRQ7 to IRQ0 have the following features:

- Using ISCR, it is possible to select whether an interrupt is generated by a low level, falling edge, rising edge, or both edges, at pins $\overline{\text{IRQ7}}$ to $\overline{\text{IRQ0}}$.
- Enabling or disabling of interrupt requests IRQ7 to IRQ0 can be selected with IER.
- The interrupt priority level can be set with IPR.
- The status of interrupt requests IRQ7 to IRQ0 is indicated in ISR. ISR flags can be cleared to 0 by software.

A block diagram of interrupts IRQ7 to IRQ0 is shown in figure 5-2.

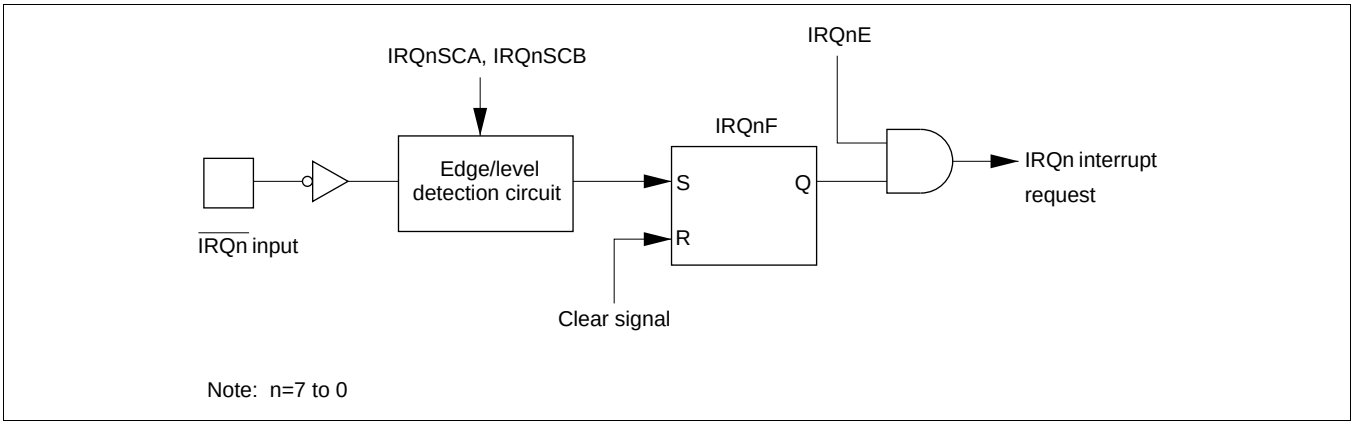

Figure 5-2 Block Diagram of Interrupts IRQ7 to IRQ0

Figure 5-3 shows the timing of setting IRQnF.

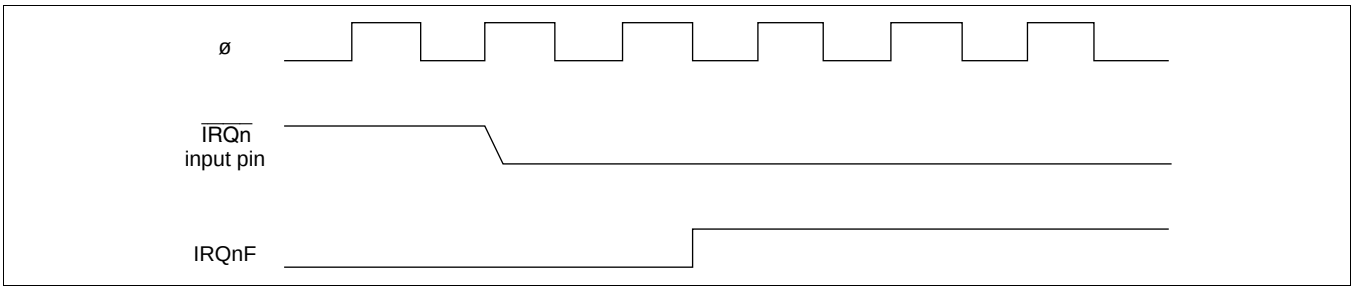

Figure 5-3 Timing of Setting IRQnF

The vector numbers for IRQ7 to IRQ0 interrupt exception handling are 23 to 16.

Detection of IRQ7 to IRQ0 interrupts does not depend on whether the relevant pin has been set for input or output. However, when a pin is used as an external interrupt input pin, do not clear the corresponding DDR to 0 and use the pin as an I/O pin for another function.

5.3.2 Internal Interrupts

There are 52 sources for internal interrupts from on-chip supporting modules.

- For each on-chip supporting module there are flags that indicate the interrupt request status, and enable bits that select enabling or disabling of these interrupts. If both of these are set to 1 for a particular interrupt source, an interrupt request is issued to the interrupt controller.
- The interrupt priority level can be set by means of IPR.
- The DMAC and DTC can be activated by a TPU, SCI, or other interrupt request. When the DMAC or DTC is activated by an interrupt, the interrupt control mode and interrupt mask bits are not affected.

5.3.3 Interrupt Exception Handling Vector Table

Table 5-4 shows interrupt exception handling sources, vector addresses, and interrupt priorities. For default priorities, the lower the vector number, the higher the priority.

Priorities among modules can be set by means of the IPR. The situation when two or more modules are set to the same priority, and priorities within a module, are fixed as shown in table 5-4.

Table 5-4 Interrupt Sources, Vector Addresses, and Interrupt Priorities

Interrupt Source	Origin of Interrupt Source	Vector Number	Vector Address* Advanced Mode	IPR	Priority
NMI	External pin	7	H'001C	—	High
IRQ0		16	H'0040	IPRA6 to 4	↑
IRQ1		17	H'0044	IPRA2 to 0	
IRQ2 IRQ3		18 19	H'0048 H'004C	IPRB6 to 4	
IRQ4 IRQ5		20 21	H'0050 H'0054	IPRB2 to 0	
IRQ6 IRQ7		22 23	H'0058 H'005C	IPRC6 to 4	
SWDTEND (software activation interrupt end)	DTC	24	H'0060	IPRC2 to 0	
WOVI (interval timer)	Watchdog timer	25	H'0064	IPRD6 to 4	
CMI (compare match)	Refresh controller	26	H'0068	IPRD2 to 0	
Reserved	—	27	H'006C	IPRE6 to 4	
ADI (A/D conversion end)	A/D	28	H'0070	IPRE2 to 0	
Reserved	—	29 30 31	H'0074 H'0078 H'007C		
TGI0A (TGR0A input capture/ compare match)	TPU channel 0	32	H'0080	IPRF6 to 4	
TGI0B (TGR0B input capture/ compare match)		33	H'0084		
TGI0C (TGR0C input capture/ compare match)		34	H'0088		
TGI0D (TGR0D input capture/ compare match)		35	H'008C		
TCI0V (overflow 0)		36	H'0090		
Reserved	—	37 38 39	H'0094 H'0098 H'009C		
TGI1A (TGR1A input capture/ compare match)	TPU channel 1	40	H'00A0	IPRF2 to 0	
TGI1B (TGR1B input capture/ compare match)		41	H'00A4		
TCI1V (overflow 1)		42	H'00A8		
TCI1U (underflow 1)		43	H'00AC		
TGI2A (TGR2A input capture/ compare match)	TPU channel 2	44	H'00B0	IPRG6 to 4	
TGI2B (TGR2B input capture/ compare match)		45	H'00B4		
TCI2V (overflow 2)		46	H'00B8		
TCI2U (underflow 2)		47	H'00BC		Low

Interrupt Source	Origin of Interrupt Source	Vector Number	Vector Address* Advanced Mode	IPR	Priority
TGI3A (TGR3A input capture/ compare match)	TPU channel 3	48	H'00C0	IPRG2 to 0	High
TGI3B (TGR3B input capture/ compare match)		49	H'00C4		
TGI3C (TGR3C input capture/ compare match)		50	H'00C8		
TGI3D (TGR3D input capture/ compare match)		51	H'00CC		
TCI3V (overflow 3)		52	H'00D0		
Reserved	—	53 54 55	H'00D4 H'00D8 H'00DC		
TGI4A (TGR4A input capture/ compare match)	TPU channel 4	56	H'00E0	IPRH6 to 4	
TGI4B (TGR4B input capture/ compare match)		57	H'00E4		
TCI4V (overflow 4)		58	H'00E8		
TCI4U (underflow 4)		59	H'00EC		
TGI5A (TGR5A input capture/ compare match)	TPU channel 5	60	H'00F0	IPRH2 to 0	
TGI5B (TGR5B input capture/ compare match)		61	H'00F4		
TCI5V (overflow 5)		62	H'00F8		
TCI5U (underflow 5)		63	H'00FC		
CMIA0 (compare match A0)	8-bit timer channel 0	64	H'0100	IPRI6 to 4	
CMIB0 (compare match B0)		65	H'0104		
OVI0 (overflow 0)		66	H'0108		
Reserved	—	67	H'010C		
CMIA1 (compare match A1)	8-bit timer channel 1	68	H'0110	IPRI2 to 0	
CMIB1 (compare match B1)		69	H'0114		
OVI1 (overflow 1)		70	H'0118		
Reserved	—	71	H'011C		
DEND0A (channel 0/channel 0A transfer end)	DMAC	72	H'0120	IPRJ6 to 4	
DEND0B (channel 0B transfer end)		73	H'0124		
DEND1A (channel 1/channel 1A transfer end)		74	H'0128		
DEND1B (channel 1B transfer end)		75	H'012C		
Reserved	—	76 77 78 79	H'0130 H'0134 H'0138 H'013C		Low

Interrupt Source	Origin of Interrupt Source	Vector Number	Vector Address* Advanced Mode	IPR	Priority
ERI0 (receive error 0)	SCI channel 0	80	H'0140	IPRJ2 to 0	High
RXI0 (reception data full 0)		81	H'0144		↑
TXI0 (transmit data empty 0)		82	H'0148		
TEI0 (transmission end 0)		83	H'014C		
ERI1 (receive error 1)	SCI channel 1	84	H'0150	IPRK6 to 4	
RXI1 (reception data full 1)		85	H'0154		
TXI1 (transmit data empty 1)		86	H'0158		
TEI1 (transmission end 1)		87	H'015C		
ERI2 (receive error 2)	SCI channel 2	88	H'0160	IPRK2 to 0	
RXI2 (reception data full 2)		89	H'0164		
TXI2 (transmit data empty 2)		90	H'0168		
TEI2 (transmission end 2)		91	H'016C		Low

Note: * Lower 16 bits of the start address.

5.4 Interrupt Operation

5.4.1 Interrupt Control Modes and Interrupt Operation

Interrupt operations in the H8S/2357 Group differ depending on the interrupt control mode.

NMI interrupts are accepted at all times except in the reset state and the hardware standby state. In the case of IRQ interrupts and on-chip supporting module interrupts, an enable bit is provided for each interrupt. Clearing an enable bit to 0 disables the corresponding interrupt request. Interrupt sources for which the enable bits are set to 1 are controlled by the interrupt controller.

Table 5-5 shows the interrupt control modes.

The interrupt controller performs interrupt control according to the interrupt control mode set by the INTM1 and INTM0 bits in SYSCR, the priorities set in IPR, and the masking state indicated by the I and UI bits in the CPU's CCR, and bits I2 to I0 in EXR.

Table 5-5 Interrupt Control Modes

Interrupt Control Mode	SYSCR INTM1	SYSCR INTM0	Priority Setting Registers	Interrupt Mask Bits	Description
0	0	0	—	I	Interrupt mask control is performed by the I bit.
—		1	—	—	Setting prohibited
2	1	0	IPR	I2 to I0	8-level interrupt mask control is performed by bits I2 to I0. 8 priority levels can be set with IPR.
—		1	—	—	Setting prohibited

Figure 5-4 shows a block diagram of the priority decision circuit.

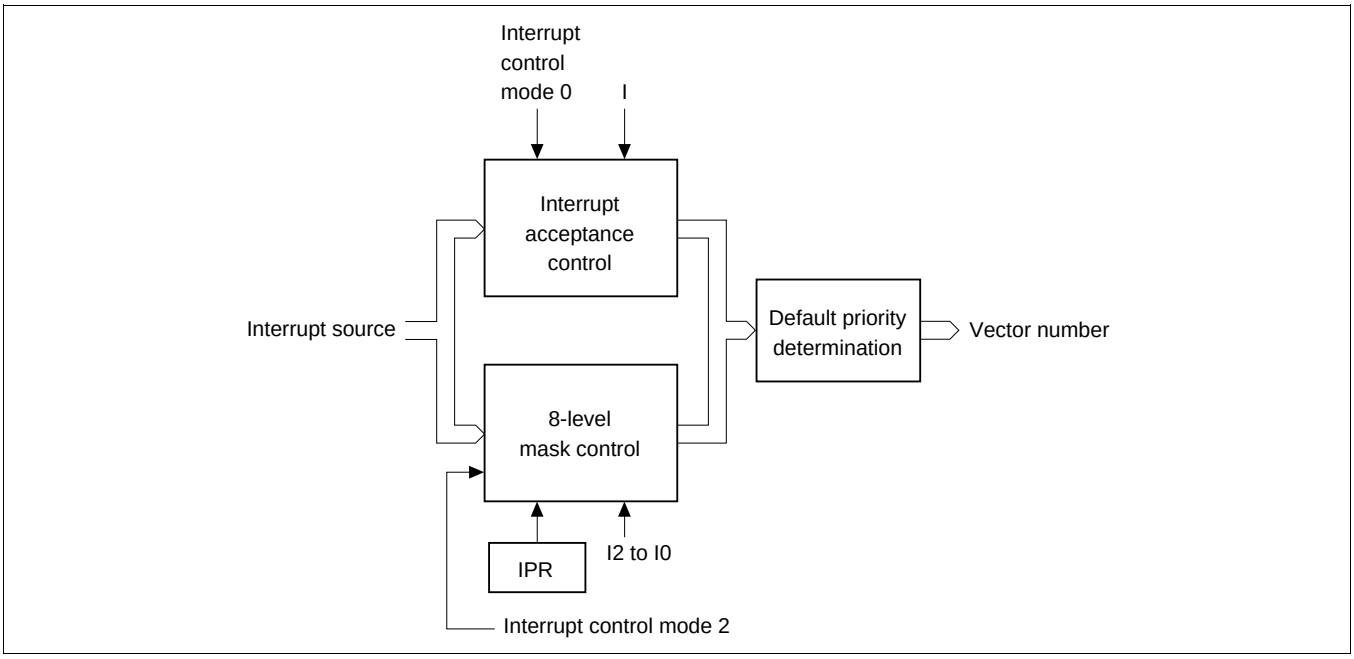

Figure 5-4 Block Diagram of Interrupt Control Operation

(1) Interrupt Acceptance Control

In interrupt control mode 0, interrupt acceptance is controlled by the I bit in CCR.

Table 5-6 shows the interrupts selected in each interrupt control mode.

Table 5-6 Interrupts Selected in Each Interrupt Control Mode (1)

	Interrupt Mask Bits	
Interrupt Control Mode	**I**	**Selected Interrupts**
0	0	All interrupts
	1	NMI interrupts
2	×	All interrupts

×: Don't care

(2) 8-Level Control

In interrupt control mode 2, 8-level mask level determination is performed for the selected interrupts in interrupt acceptance control according to the interrupt priority level (IPR).

The interrupt source selected is the interrupt with the highest priority level, and whose priority level set in IPR is higher than the mask level.

Table 5-7 Interrupts Selected in Each Interrupt Control Mode (2)

Interrupt Control Mode	Selected Interrupts
0	All interrupts
2	Highest-priority-level (IPR) interrupt whose priority level is greater than the mask level (IPR > I2 to I0).

(3) Default Priority Determination

When an interrupt is selected by 8-level control, its priority is determined and a vector number is generated.

If the same value is set for IPR, acceptance of multiple interrupts is enabled, and so only the interrupt source with the highest priority according to the preset default priorities is selected and has a vector number generated.

Interrupt sources with a lower priority than the accepted interrupt source are held pending.

Table 5-8 shows operations and control signal functions in each interrupt control mode.

Table 5-8 Operations and Control Signal Functions in Each Interrupt Control Mode

Interrupt Control Mode	Setting		Interrupt Acceptance Control		8-Level Control		Default Priority Determination	T (Trace)
	INTM1	INTM0	I		I2 to I0	IPR		
0	0	0	○	IM	× —	—*2	○	—
2	1	0	×	—*1	○ IM	PR	○	T

Legend

○: Interrupt operation control performed
×: No operation. (All interrupts enabled)
IM: Used as interrupt mask bit
PR: Sets priority
—: Not used
Notes: 1. Set to 1 when interrupt is accepted.
2. Keep the initial setting.

5.4.2 Interrupt Control Mode 0

Enabling and disabling of IRQ interrupts and on-chip supporting module interrupts can be set by means of the I bit in the CPU's CCR. Interrupts are enabled when the I bit is cleared to 0, and disabled when set to 1.

Figure 5-5 shows a flowchart of the interrupt acceptance operation in this case.

[1] If an interrupt source occurs when the corresponding interrupt enable bit is set to 1, an interrupt request is sent to the interrupt controller.

[2] The I bit is then referenced. If the I bit is cleared to 0, the interrupt request is accepted. If the I bit is set to 1, only an NMI interrupt is accepted, and other interrupt requests are held pending.

[3] Interrupt requests are sent to the interrupt controller, the highest-ranked interrupt according to the priority system is accepted, and other interrupt requests are held pending.

[4] When an interrupt request is accepted, interrupt exception handling starts after execution of the current instruction has been completed.

[5] The PC and CCR are saved to the stack area by interrupt exception handling. The PC saved on the stack shows the address of the first instruction to be executed after returning from the interrupt handling routine.

[6] Next, the I bit in CCR is set to 1. This masks all interrupts except NMI.

[7] A vector address is generated for the accepted interrupt, and execution of the interrupt handling routine starts at the address indicated by the contents of that vector address.

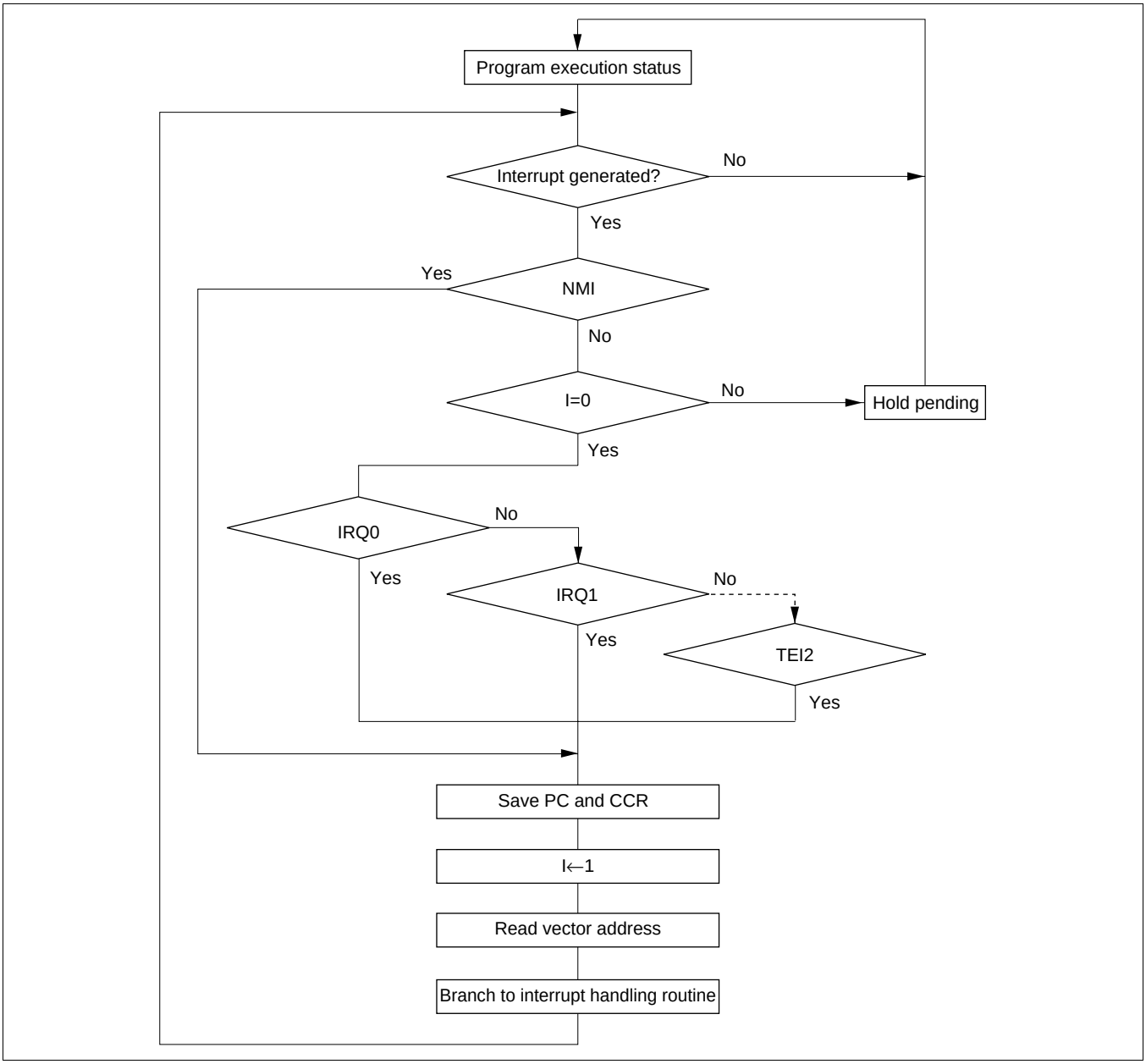

Figure 5-5 Flowchart of Procedure Up to Interrupt Acceptance in Interrupt Control Mode 0

5.4.3 Interrupt Control Mode 2

Eight-level masking is implemented for IRQ interrupts and on-chip supporting module interrupts by comparing the interrupt mask level set by bits I2 to I0 of EXR in the CPU with IPR.

Figure 5-6 shows a flowchart of the interrupt acceptance operation in this case.

[1] If an interrupt source occurs when the corresponding interrupt enable bit is set to 1, an interrupt request is sent to the interrupt controller.

[2] When interrupt requests are sent to the interrupt controller, the interrupt with the highest priority according to the interrupt priority levels set in IPR is selected, and lower-priority interrupt requests are held pending. If a number of interrupt requests with the same priority are generated at the same time, the interrupt request with the highest priority according to the priority system shown in table 5-4 is selected.

[3] Next, the priority of the selected interrupt request is compared with the interrupt mask level set in EXR. An interrupt request with a priority no higher than the mask level set at that time is held pending, and only an interrupt request with a priority higher than the interrupt mask level is accepted.

[4] When an interrupt request is accepted, interrupt exception handling starts after execution of the current instruction has been completed.

[5] The PC, CCR, and EXR are saved to the stack area by interrupt exception handling. The PC saved on the stack shows the address of the first instruction to be executed after returning from the interrupt handling routine.

[6] The T bit in EXR is cleared to 0. The interrupt mask level is rewritten with the priority level of the accepted interrupt. If the accepted interrupt is NMI, the interrupt mask level is set to H'7.

[7] A vector address is generated for the accepted interrupt, and execution of the interrupt handling routine starts at the address indicated by the contents of that vector address.

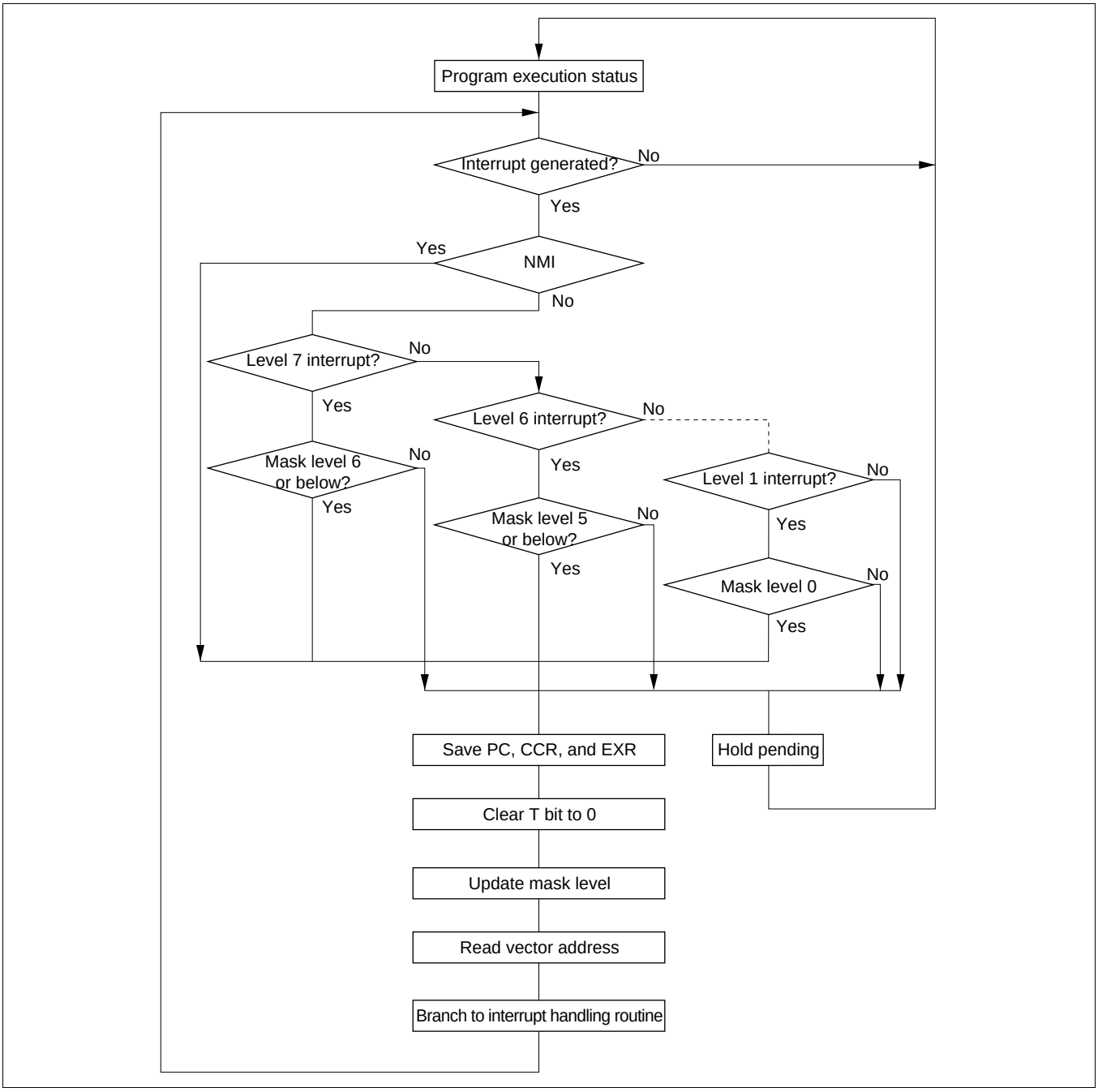

Figure 5-6 Flowchart of Procedure Up to Interrupt Acceptance in Interrupt Control Mode 2

5.4.4 Interrupt Exception Handling Sequence

Figure 5-7 shows the interrupt exception handling sequence. The example shown is for the case where interrupt control mode 0 is set in advanced mode, and the program area and stack area are in on-chip memory.

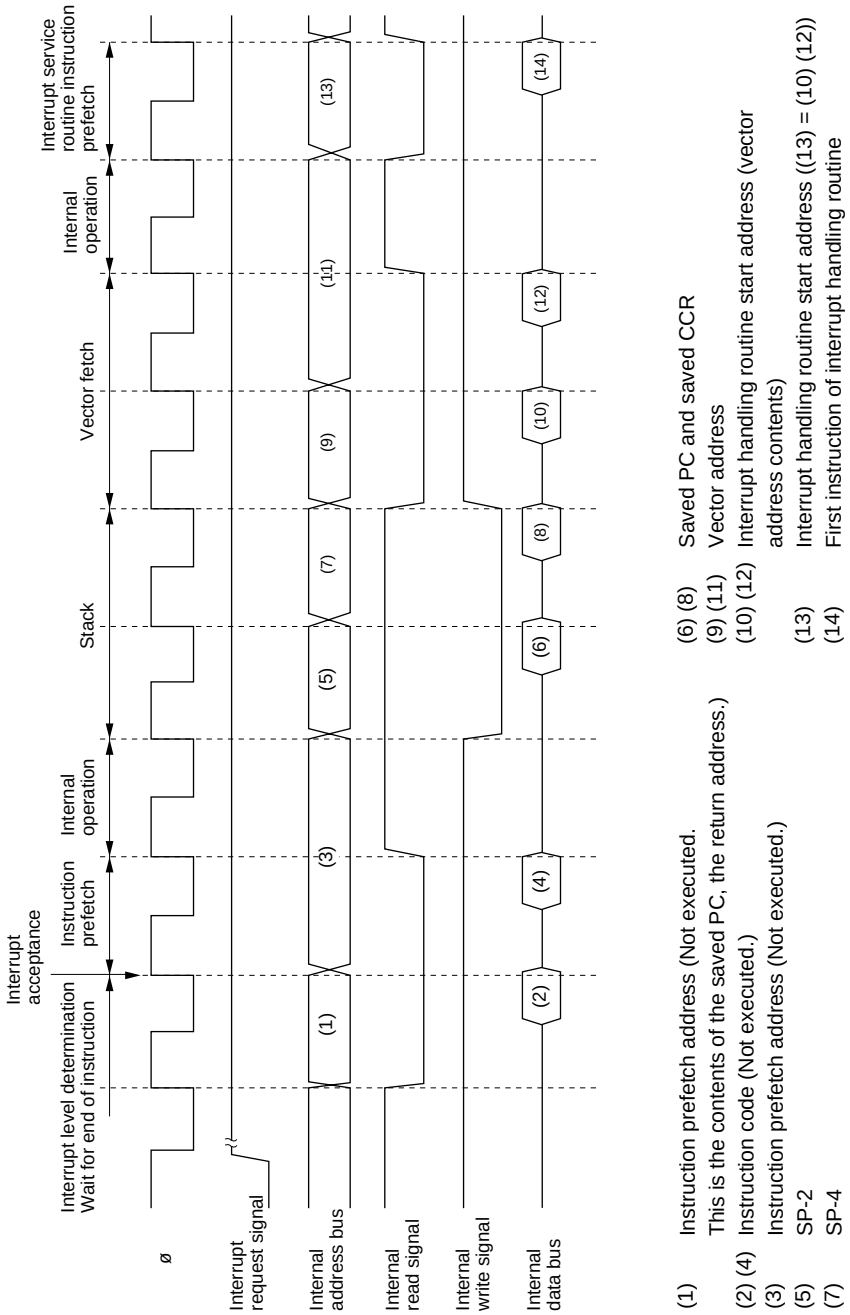

Figure 5-7 Interrupt Exception Handling

5.4.5 Interrupt Response Times

The H8S/2357 Group is capable of fast word transfer instruction to on-chip memory, and the program area is provided in on-chip ROM and the stack area in on-chip RAM, enabling high-speed processing.

Table 5-9 shows interrupt response times - the interval between generation of an interrupt request and execution of the first instruction in the interrupt handling routine. The execution status symbols used in table 5-9 are explained in table 5-10.

Table 5-9 Interrupt Response Times

		Advanced Mode	
No.	**Execution Status**	**INTM1 = 0**	**INTM1 = 1**
1	Interrupt priority determination*[1]	3	3
2	Number of wait states until executing instruction ends*[2]	1 to $(19+2\cdot S_I)$	1 to $(19+2\cdot S_I)$
3	PC, CCR, EXR stack save	$2\cdot S_K$	$3\cdot S_K$
4	Vector fetch	$2\cdot S_I$	$2\cdot S_I$
5	Instruction fetch*[3]	$2\cdot S_I$	$2\cdot S_I$
6	Internal processing*[4]	2	2
Total (using on-chip memory)		12 to 32	13 to 33

Notes: 1. Two states in case of internal interrupt.
2. Refers to MULXS and DIVXS instructions.
3. Prefetch after interrupt acceptance and interrupt handling routine prefetch.
4. Internal processing after interrupt acceptance and internal processing after vector fetch.

Table 5-10 Number of States in Interrupt Handling Routine Execution Statuses

		Object of Access				
			External Device			
			8-Bit Bus		16-Bit Bus	
Symbol		**Internal Memory**	**2-State Access**	**3-State Access**	**2-State Access**	**3-State Access**
Instruction fetch	S_I	1	4	6 + 2m	2	3 + m
Branch address read	S_J					
Stack manipulation	S_K					

Legend:
m: Number of wait states in an external device access.

5.5 Usage Notes

5.5.1 Contention between Interrupt Generation and Disabling

When an interrupt enable bit is cleared to 0 to disable interrupts, the disabling becomes effective after execution of the instruction.

In other words, when an interrupt enable bit is cleared to 0 by an instruction such as BCLR or MOV, if an interrupt is generated during execution of the instruction, the interrupt concerned will still be enabled on completion of the instruction, and so interrupt exception handling for that interrupt will be executed on completion of the instruction. However, if there is an interrupt request of higher priority than that interrupt, interrupt exception handling will be executed for the higher-priority interrupt, and the lower-priority interrupt will be ignored.

The same also applies when an interrupt source flag is cleared.

Figure 5-8 shows an example in which the TGIEA bit in the TPU's TIER0 register is cleared to 0.

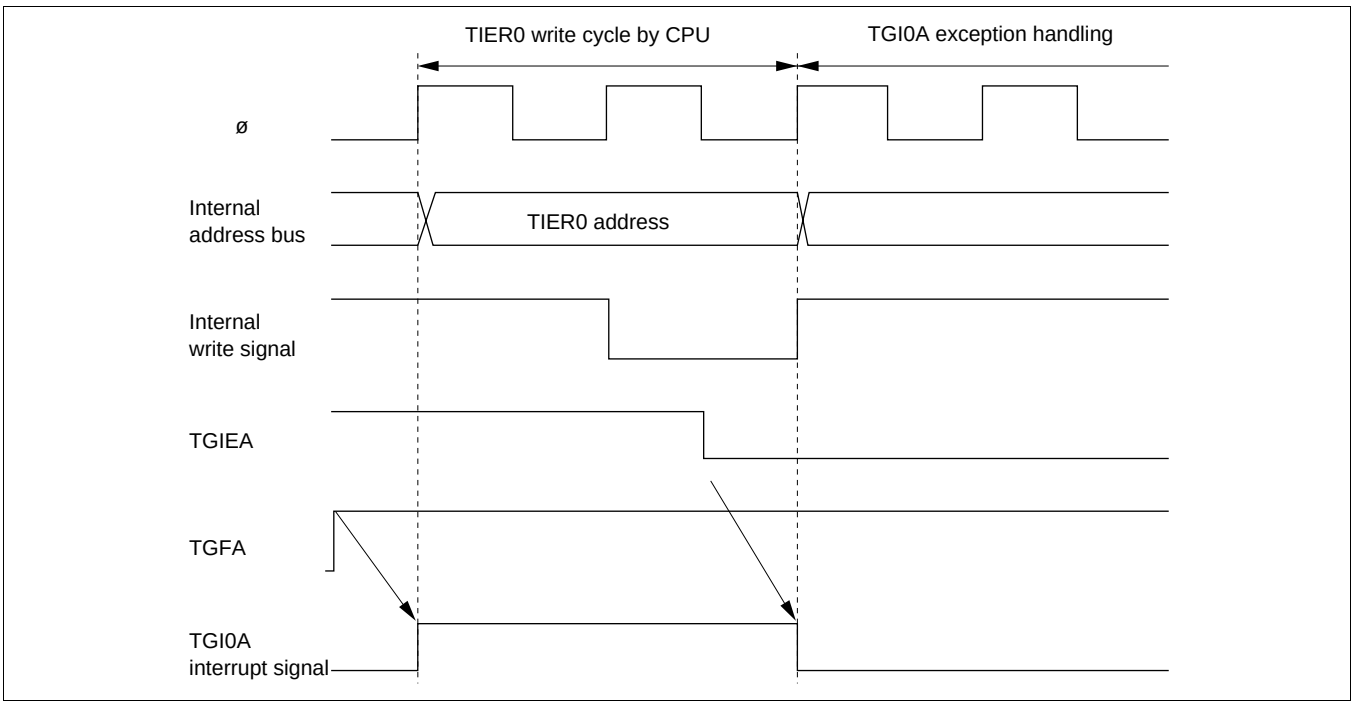

Figure 5-8 Contention between Interrupt Generation and Disabling

The above contention will not occur if an enable bit or interrupt source flag is cleared to 0 while the interrupt is masked.

5.5.2 Instructions that Disable Interrupts

Instructions that disable interrupts are LDC, ANDC, ORC, and XORC. After any of these instructions is executed, all interrupts including NMI are disabled and the next instruction is always executed. When the I bit is set by one of these instructions, the new value becomes valid two states after execution of the instruction ends.

5.5.3 Times when Interrupts are Disabled

There are times when interrupt acceptance is disabled by the interrupt controller.

The interrupt controller disables interrupt acceptance for a 3-state period after the CPU has updated the mask level with an LDC, ANDC, ORC, or XORC instruction.

5.5.4 Interrupts during Execution of EEPMOV Instruction

Interrupt operation differs between the EEPMOV.B instruction and the EEPMOV.W instruction.

With the EEPMOV.B instruction, an interrupt request (including NMI) issued during the transfer is not accepted until the move is completed.

With the EEPMOV.W instruction, if an interrupt request is issued during the transfer, interrupt exception handling starts at a break in the transfer cycle. The PC value saved on the stack in this case is the address of the next instruction.

Therefore, if an interrupt is generated during execution of an EEPMOV.W instruction, the following coding should be used.

```
L1:   EEPMOV.W
      MOV.W     R4,R4
      BNE       L1
```

5.6 DTC and DMAC Activation by Interrupt

5.6.1 Overview

The DTC and DMAC can be activated by an interrupt. In this case, the following options are available:

- Interrupt request to CPU
- Activation request to DTC
- Activation request to DMAC
- Selection of a number of the above

For details of interrupt requests that can be used with to activate the DTC or DMAC, see section 8, Data Transfer Controller, and section 7, DMA Controller.

5.6.2 Block Diagram

Figure 5-9 shows a block diagram of the DTC and DMAC interrupt controller.

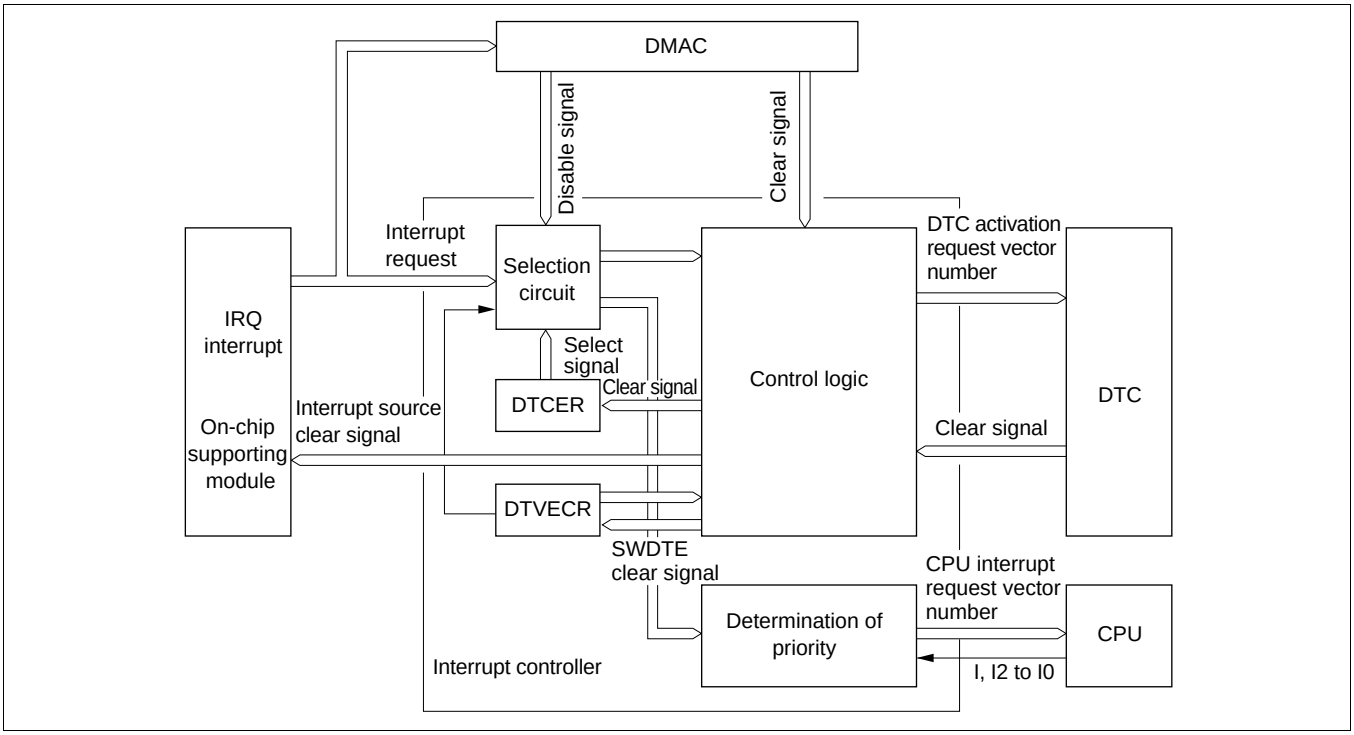

Figure 5-9 Interrupt Control for DTC and DMAC

5.6.3 Operation

The interrupt controller has three main functions in DTC and DMAC control.

Selection of Interrupt Source: With the DMAC, the activation source is input directly to each channel. The activation source for each DMAC channel is selected with bits DTF3 to DTF0 in DMACR. Whether the selected activation source is to be managed by the DMAC can be selected with the DTA bit of DMABCR. When the DTA bit is set to 1, the interrupt source constituting that DMAC activation source is not a DTC activation source or CPU interrupt source.

For interrupt sources other than interrupts managed by the DMAC, it is possible to select DTC activation request or CPU interrupt request with the DTCE bit of DTCERA to DTCERF in the DTC.

After a DTC data transfer, the DTCE bit can be cleared to 0 and an interrupt request sent to the CPU in accordance with the specification of the DISEL bit of MRB in the DTC.

When the DTC has performed the specified number of data transfers and the transfer counter value is zero, the DTCE bit is cleared to 0 and an interrupt request is sent to the CPU after the DTC data transfer.

Determination of Priority: The DTC activation source is selected in accordance with the default priority order, and is not affected by mask or priority levels. See section 7.6, Interrupts, and section 8.3.3, DTC Vector Table, for the respective priorities.

With the DMAC, the activation source is input directly to each channel.

Operation Order: If the same interrupt is selected as a DTC activation source and a CPU interrupt source, the DTC data transfer is performed first, followed by CPU interrupt exception handling.

If the same interrupt is selected as a DMAC activation source and a DTC activation source or CPU interrupt source, operations are performed for them independently according to their respective operating statuses and bus mastership priorities.

Table 5-11 summarizes interrupt source selection and interrupt source clearance control according to the settings of the DTA bit of DMABCR in the DMAC, the DTCE bit of DTCERA to DTCERF in the DTC and the DISEL bit of MRB in the DTC.

Table 5-11 Interrupt Source Selection and Clearing Control

Settings			Interrupt Source Selection/Clearing Control		
DMAC	**DTC**				
DTA	**DTCE**	**DISEL**	**DMAC**	**DTC**	**CPU**
0	0	*	○	×	Δ
	1	0	○	Δ	×
		1	○	○	Δ
1	*	*	Δ	×	×

Legend:

Δ : The relevant interrupt is used. Interrupt source clearing is performed.
(The CPU should clear the source flag in the interrupt handling routine.)

○ : The relevant interrupt is used. The interrupt source is not cleared.

× : The relevant bit cannot be used.

* : Don't care

5.6.4 Note on Use

SCI and A/D converter interrupt sources are cleared when the DMAC or DTC reads or writes to the prescribed register, and are not dependent upon the DTA bit or DISEL bit.

Section 6 Bus Controller

6.1 Overview

The H8S/2357 Group has a on-chip bus controller (BSC) that manages the external address space divided into eight areas. The bus specifications, such as bus width and number of access states, can be set independently for each area, enabling multiple memories to be connected easily.

The bus controller also has a bus arbitration function, and controls the operation of the internal bus masters: the CPU, DMA controller (DMAC), and data transfer controller (DTC).

6.1.1 Features

The features of the bus controller are listed below.

- Manages external address space in area units
  - In advanced mode, manages the external space as 8 areas of 2-Mbytes
  - Bus specifications can be set independently for each area
  - DRAM/burst ROM interfaces can be set
- Basic bus interface
  - Chip select ($\overline{CS0}$ to $\overline{CS7}$) can be output for areas 0 to 7
  - 8-bit access or 16-bit access can be selected for each area
  - 2-state access or 3-state access can be selected for each area
  - Program wait states can be inserted for each area
- DRAM interface
  - DRAM interface can be set for areas 2 to 5 (in advanced mode)
  - Row address/column address multiplexed output (8/9/10 bits)
  - Two byte access methods (2-CAS)
  - Burst operation (fast page mode)
  - T_P cycle insertion to secure RAS precharging time
  - Choice of CAS-before-RAS refreshing or self-refreshing
- Burst ROM interface
  - Burst ROM interface can be set for area 0
  - Choice of 1- or 2-state burst access
- Idle cycle insertion
  - An idle cycle can be inserted in case of an external read cycle between different areas
  - An idle cycle can be inserted in case of an external write cycle immediately after an external read cycle
- Write buffer functions
  - External write cycle and internal access can be executed in parallel
  - DMAC single-address mode and internal access can be executed in parallel
- Bus arbitration function
  - Includes a bus arbiter that arbitrates bus mastership among the CPU, DMAC, and DTC

- Other features
  - Refresh counter (refresh timer) can be used as an interval timer
  - External bus release function

6.1.2 Block Diagram

Figure 6-1 shows a block diagram of the bus controller.

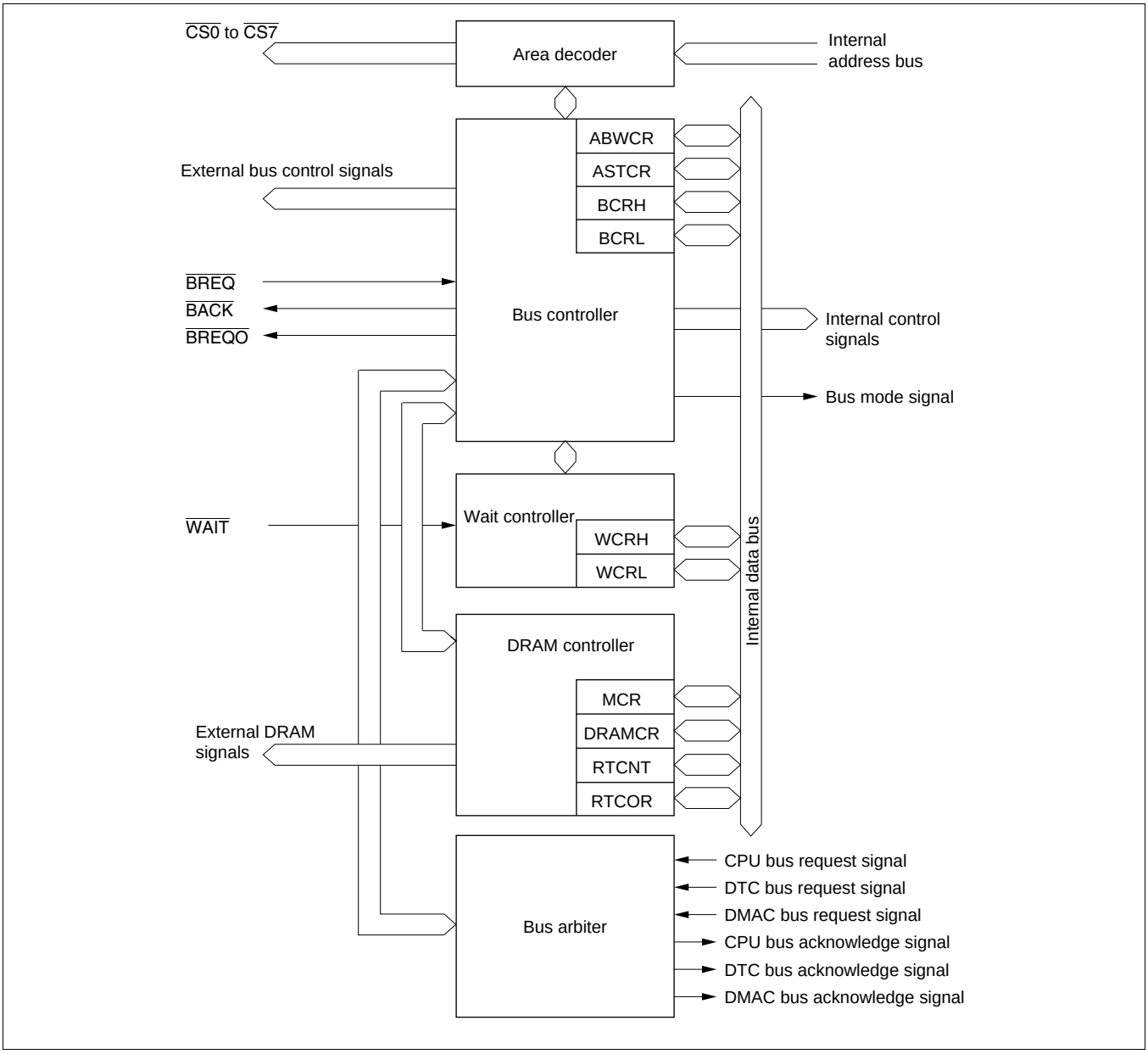

Figure 6-1 Block Diagram of Bus Controller

6.1.3 Pin Configuration

Table 6-1 summarizes the pins of the bus controller.

Table 6-1 Bus Controller Pins

Name	Symbol	I/O	Function
Address strobe	$\overline{AS}$	Output	Strobe signal indicating that address output on address bus is enabled.
Read	$\overline{RD}$	Output	Strobe signal indicating that external space is being read.
High write/write enable	$\overline{HWR}$	Output	Strobe signal indicating that external space is to be written, and upper half (D_{15} to D_8) of data bus is enabled. 2-CAS DRAM write enable signal.
Low write	$\overline{LWR}$	Output	Strobe signal indicating that external space is to be written, and lower half (D_7 to D_0) of data bus is enabled.
Chip select 0	$\overline{CS0}$	Output	Strobe signal indicating that area 0 is selected.
Chip select 1	$\overline{CS1}$	Output	Strobe signal indicating that area 1 is selected.
Chip select 2/row address strobe 2	$\overline{CS2}$	Output	Strobe signal indicating that area 2 is selected. DRAM row address strobe signal when area 2 is in DRAM space.
Chip select 3/row address strobe 3	$\overline{CS3}$	Output	Strobe signal indicating that area 3 is selected. DRAM row address strobe signal when area 3 is in DRAM space.
Chip select 4/row address strobe 4	$\overline{CS4}$	Output	Strobe signal indicating that area 4 is selected. DRAM row address strobe signal when area 4 is in DRAM space.
Chip select 5/row address strobe 5	$\overline{CS5}$	Output	Strobe signal indicating that area 5 is selected. DRAM row address strobe signal when area 5 is in DRAM space.
Chip select 6	$\overline{CS6}$	Output	Strobe signal indicating that area 6 is selected.
Chip select 7	$\overline{CS7}$	Output	Strobe signal indicating that area 7 is selected.
Upper column address strobe	$\overline{CAS}$	Output	2-CAS DRAM upper column address strobe signal.
Lower column strobe	$\overline{LCAS}$	Output	DRAM lower column address strobe signal.
Wait	$\overline{WAIT}$	Input	Wait request signal when accessing external 3-state access space.
Bus request	$\overline{BREQ}$	Input	Request signal that releases bus to external device.
Bus request acknowledge	$\overline{BACK}$	Output	Acknowledge signal indicating that bus has been released.
Bus request output	$\overline{BREQO}$	Output	External bus request signal used when internal bus master accesses external space when external bus is released.

6.1.4 Register Configuration

Table 6-2 summarizes the registers of the bus controller.

Table 6-2 Bus Controller Registers

Name	Abbreviation	R/W	Initial Value: Power-On Reset	Initial Value: Manual Reset*[3]	Address*[1]
Bus width control register	ABWCR	R/W	H'FF/H'00*[2]	Retained	H'FED0
Access state control register	ASTCR	R/W	H'FF	Retained	H'FED1
Wait control register H	WCRH	R/W	H'FF	Retained	H'FED2
Wait control register L	WCRL	R/W	H'FF	Retained	H'FED3
Bus control register H	BCRH	R/W	H'D0	Retained	H'FED4
Bus control register L	BCRL	R/W	H'3C	Retained	H'FED5
Memory control register	MCR	R/W	H'00	Retained	H'FED6
DRAM control register	DRAMCR	R/W	H'00	Retained	H'FED7
Refresh timer/counter	RTCNT	R/W	H'00	Retained	H'FED8
Refresh time constant register	RTCOR	R/W	H'FF	Retained	H'FED9

Notes: 1. Lower 16 bits of the address.
2. Determined by the MCU operating mode.
3. Manual reset is only supported in the H8S/2357 ZTAT.

6.2 Register Descriptions

6.2.1 Bus Width Control Register (ABWCR)

Bit	:	7	6	5	4	3	2	1	0
		ABW7	ABW6	ABW5	ABW4	ABW3	ABW2	ABW1	ABW0
Modes 5 to 7									
Initial value	:	1	1	1	1	1	1	1	1
R/W	:	R/W	R/W	R/W	R/W	R/W	R/W	R/W	R/W
Mode 4									
Initial value	:	0	0	0	0	0	0	0	0
R/W	:	R/W	R/W	R/W	R/W	R/W	R/W	R/W	R/W

ABWCR is an 8-bit readable/writable register that designates each area for either 8-bit access or 16-bit access.

ABWCR sets the data bus width for the external memory space. The bus width for on-chip memory and internal I/O registers is fixed regardless of the settings in ABWCR.

After a power-on reset and in hardware standby mode, ABWCR is initialized to H'FF in modes 5 to 7,*[1] and to H'00 in mode 4. It is not initialized by a manual reset*[2] or in software standby mode.

Notes: 1. In ROMless version, modes 6 and 7 are not available.
2. Manual reset is only supported in the H8S/2357 ZTAT.

Bits 7 to 0—Area 7 to 0 Bus Width Control (ABW7 to ABW0): These bits select whether the corresponding area is to be designated for 8-bit access or 16-bit access.

Bit n ABWn	Description
0	Area n is designated for 16-bit access
1	Area n is designated for 8-bit access

(n = 7 to 0)

6.2.2 Access State Control Register (ASTCR)

Bit :	7	6	5	4	3	2	1	0
	AST7	AST6	AST5	AST4	AST3	AST2	AST1	AST0
Initial value :	1	1	1	1	1	1	1	1
R/W :	R/W	R/W	R/W	R/W	R/W	R/W	R/W	R/W

ASTCR is an 8-bit readable/writable register that designates each area as either a 2-state access space or a 3-state access space.

ASTCR sets the number of access states for the external memory space. The number of access states for on-chip memory and internal I/O registers is fixed regardless of the settings in ASTCR.

ASTCR is initialized to H'FF by a power-on reset and in hardware standby mode. It is not initialized by a manual reset* or in software standby mode.

Note: * Manual reset is only supported in the H8S/2357 ZTAT.

Bits 7 to 0—Area 7 to 0 Access State Control (AST7 to AST0): These bits select whether the corresponding area is to be designated as a 2-state access space or a 3-state access space.

Wait state insertion is enabled or disabled at the same time.

Bit n ASTn	Description
0	Area n is designated for 2-state access Wait state insertion in area n external space is disabled
1	Area n is designated for 3-state access (Initial value) Wait state insertion in area n external space is enabled

(n = 7 to 0)

6.2.3 Wait Control Registers H and L (WCRH, WCRL)

WCRH and WCRL are 8-bit readable/writable registers that select the number of program wait states for each area.

Program waits are not inserted in the case of on-chip memory or internal I/O registers.

WCRH and WCRL are initialized to H'FF by a power-on reset and in hardware standby mode. They are not initialized by a manual reset* or in software standby mode.

Note: * Manual reset is only supported in the H8S/2357 ZTAT.

(1) WCRH

Bit :	7	6	5	4	3	2	1	0
	W71	W70	W61	W60	W51	W50	W41	W40
Initial value :	1	1	1	1	1	1	1	1
R/W :	R/W	R/W	R/W	R/W	R/W	R/W	R/W	R/W

Bits 7 and 6—Area 7 Wait Control 1 and 0 (W71, W70): These bits select the number of program wait states when area 7 in external space is accessed while the AST7 bit in ASTCR is set to 1.

Bit 7 W71	Bit 6 W70	Description
0	0	Program wait not inserted when external space area 7 is accessed
	1	1 program wait state inserted when external space area 7 is accessed
1	0	2 program wait states inserted when external space area 7 is accessed
	1	3 program wait states inserted when external space area 7 is accessed (Initial value)

Bits 5 and 4—Area 6 Wait Control 1 and 0 (W61, W60): These bits select the number of program wait states when area 6 in external space is accessed while the AST6 bit in ASTCR is set to 1.

Bit 5 W61	Bit 4 W60	Description
0	0	Program wait not inserted when external space area 6 is accessed
	1	1 program wait state inserted when external space area 6 is accessed
1	0	2 program wait states inserted when external space area 6 is accessed
	1	3 program wait states inserted when external space area 6 is accessed (Initial value)

Bits 3 and 2—Area 5 Wait Control 1 and 0 (W51, W50): These bits select the number of program wait states when area 5 in external space is accessed while the AST5 bit in ASTCR is set to 1.

Bit 3 W51	Bit 2 W50	Description
0	0	Program wait not inserted when external space area 5 is accessed
	1	1 program wait state inserted when external space area 5 is accessed
1	0	2 program wait states inserted when external space area 5 is accessed
	1	3 program wait states inserted when external space area 5 is accessed (Initial value)

Bits 1 and 0—Area 4 Wait Control 1 and 0 (W41, W40): These bits select the number of program wait states when area 4 in external space is accessed while the AST4 bit in ASTCR is set to 1.

Bit 1 W41	Bit 0 W40	Description
0	0	Program wait not inserted when external space area 4 is accessed
	1	1 program wait state inserted when external space area 4 is accessed
1	0	2 program wait states inserted when external space area 4 is accessed
	1	3 program wait states inserted when external space area 4 is accessed (Initial value)

(2) WCRL

Bit :	7	6	5	4	3	2	1	0
	W31	W30	W21	W20	W11	W10	W01	W00
Initial value :	1	1	1	1	1	1	1	1
R/W :	R/W	R/W	R/W	R/W	R/W	R/W	R/W	R/W

Bits 7 and 6—Area 3 Wait Control 1 and 0 (W31, W30): These bits select the number of program wait states when area 3 in external space is accessed while the AST3 bit in ASTCR is set to 1.

Bit 7 W31	Bit 6 W30	Description
0	0	Program wait not inserted when external space area 3 is accessed
	1	1 program wait state inserted when external space area 3 is accessed
1	0	2 program wait states inserted when external space area 3 is accessed
	1	3 program wait states inserted when external space area 3 is accessed (Initial value)

Bits 5 and 4—Area 2 Wait Control 1 and 0 (W21, W20): These bits select the number of program wait states when area 2 in external space is accessed while the AST2 bit in ASTCR is set to 1.

Bit 5 W21	Bit 4 W20	Description
0	0	Program wait not inserted when external space area 2 is accessed
	1	1 program wait state inserted when external space area 2 is accessed
1	0	2 program wait states inserted when external space area 2 is accessed
	1	3 program wait states inserted when external space area 2 is accessed (Initial value)

Bits 3 and 2—Area 1 Wait Control 1 and 0 (W11, W10): These bits select the number of program wait states when area 1 in external space is accessed while the AST1 bit in ASTCR is set to 1.

Bit 3 W11	Bit 2 W10	Description
0	0	Program wait not inserted when external space area 1 is accessed
	1	1 program wait state inserted when external space area 1 is accessed
1	0	2 program wait states inserted when external space area 1 is accessed
	1	3 program wait states inserted when external space area 1 is accessed (Initial value)

Bits 1 and 0—Area 0 Wait Control 1 and 0 (W01, W00): These bits select the number of program wait states when area 0 in external space is accessed while the AST0 bit in ASTCR is set to 1.

Bit 1 W01	Bit 0 W00	Description
0	0	Program wait not inserted when external space area 0 is accessed
	1	1 program wait state inserted when external space area 0 is accessed
1	0	2 program wait states inserted when external space area 0 is accessed
	1	3 program wait states inserted when external space area 0 is accessed (Initial value)

6.2.4 Bus Control Register H (BCRH)

Bit :	7	6	5	4	3	2	1	0
	ICIS1	ICIS0	BRSTRM	BRSTS1	BRSTS0	RMTS2	RMTS1	RMTS0
Initial value :	1	1	0	1	0	0	0	0
R/W :	R/W	R/W	R/W	R/W	R/W	R/W	R/W	R/W

BCRH is an 8-bit readable/writable register that selects enabling or disabling of idle cycle insertion, and the memory interface for areas 2 to 5 and area 0.

BCRH is initialized to H'D0 by a power-on reset and in hardware standby mode. It is not initialized by a manual reset* or in software standby mode.

Note: * Manual reset is only supported in the H8S/2357 ZTAT.

Bit 7—Idle Cycle Insert 1 (ICIS1): Selects whether or not one idle cycle state is to be inserted between bus cycles when successive external read cycles are performed in different areas.

Bit 7 ICIS1	Description
0	Idle cycle not inserted in case of successive external read cycles in different areas
1	Idle cycle inserted in case of successive external read cycles in different areas (Initial value)

Bit 6—Idle Cycle Insert 0 (ICIS0): Selects whether or not one idle cycle state is to be inserted between bus cycles when successive external read and external write cycles are performed .

Bit 6 ICIS0	Description
0	Idle cycle not inserted in case of successive external read and external write cycles
1	Idle cycle inserted in case of successive external read and external write cycles (Initial value)

Bit 5—Burst ROM Enable (BRSTRM): Selects whether area 0 is used as a burst ROM interface.

Bit 5 BRSTRM	Description
0	Area 0 is basic bus interface (Initial value)
1	Area 0 is burst ROM interface

Bit 4—Burst Cycle Select 1 (BRSTS1): Selects the number of burst cycles for the burst ROM interface.

Bit 4 BRSTS1	Description
0	Burst cycle comprises 1 state
1	Burst cycle comprises 2 states (Initial value)

Bit 3—Burst Cycle Select 0 (BRSTS0): Selects the number of words that can be accessed in a burst ROM interface burst access.

Bit 3 BRSTS0	Description	
0	Max. 4 words in burst access	(Initial value)
1	Max. 8 words in burst access	

Bits 2 to 0—RAM Type Select (RMTS2 to RMTS0): These bits select the memory interface for areas 2 to 5 in advanced mode.

When DRAM space is selected, the relevant area is designated as DRAM interface.

Bit 2 RMTS2	Bit 1 RMTS1	Bit 0 RMTS0	Description Area 5	Area 4	Area 3	Area 2
0	0	0	Normal space			
		1	Normal space			DRAM space
	1	0	Normal space		DRAM space	
		1	DRAM space			
1	—	—	—			

Note: When areas selected in DRAM space are all 8-bit space, the PF_2 pin can be used as an I/O port, $\overline{BREQO}$, or $\overline{WAIT}$.

6.2.5 Bus Control Register L (BCRL)

Bit :	7	6	5	4	3	2	1	0
	BRLE	BREQOE	EAE	LCASS	DDS	—	WDBE	WAITE
Initial value :	0	0	1	1	1	1	0	0
R/W :	R/W	R/W	R/W	R/W	R/W	R/W	R/W	R/W

BCRL is an 8-bit readable/writable register that performs selection of the external bus-released state protocol, the LCAS signal, DMAC single address transfer, enabling or disabling of the write data buffer function, and enabling or disabling of $\overline{WAIT}$ pin input.

BCRL is initialized to H'3C by a power-on reset and in hardware standby mode. It is not initialized by a manual reset* or in software standby mode.

Note: * Manual reset is only supported in the H8S/2357 ZTAT.

Bit 7—Bus Release Enable (BRLE): Enables or disables external bus release.

Bit 7 BRLE	Description
0	External bus release is disabled. $\overline{BREQ}$, $\overline{BACK}$, and $\overline{BREQO}$ can be used as I/O ports. (Initial value)
1	External bus release is enabled.

Bit 6—BREQO Pin Enable (BREQOE): Outputs a signal that requests the external bus master to drop the bus request signal ($\overline{BREQ}$) in the external bus release state, when an internal bus master performs an external space access, or when a refresh request is generated.

Bit 6 BREQOE	Description	
0	$\overline{BREQO}$ output disabled. $\overline{BREQO}$ can be used as I/O port.	(Initial value)
1	$\overline{BREQO}$ output enabled.	

Bit 5—External Address Enable (EAE): Selects whether addresses H'010000 to H'01FFFF*[2] are to be internal addresses or external addresses.

Bit 5 EAE	Description	
0	Addresses H'010000 to H'01FFFF*[2] are in on-chip ROM	
1	Addresses H'010000 to H'01FFFF*[2] are external addresses (external expansion mode) or a reserved area*[1] (single-chip mode)	(Initial value)

Notes: 1. Reserved areas should not be accessed.
2. Addresses H'010000 to H'01FFFF are in the H8S/2357. Addresses H'010000 to H'03FFFF are in the H8S/2398.

Bit 4—LCAS Select (LCASS): Write 0 to this bit when using the DRAM interface.
$\overline{LCAS}$ pin used for 2-CAS type DRAM interface $\overline{LCAS}$ signal. $\overline{BREQO}$ output and $\overline{WAIT}$ input cannot be used when $\overline{LCAS}$ signal is used.

Bit 3—DACK Timing Select (DDS): Selects the DMAC single address transfer bus timing for the DRAM interface.

Bit 3 DDS	Description	
0	When DMAC single address transfer is performed in DRAM space, full access is always executed $\overline{DACK}$ signal goes low from T_r or T_1 cycle	
1	Burst access is possible when DMAC single address transfer is performed in DRAM space $\overline{DACK}$ signal goes low from T_{c1} or T_2 cycle	(Initial value)

Bit 2—Reserved: Only 1 should be written to this bit.

Bit 1—Write Data Buffer Enable (WDBE): Selects whether or not the write buffer function is used for an external write cycle or DMAC single address cycle.

Bit 1 WDBE	Description	
0	Write data buffer function not used	(Initial value)
1	Write data buffer function used	

Bit 0—WAIT Pin Enable (WAITE): Selects enabling or disabling of wait input by the $\overline{\text{WAIT}}$ pin.

Bit 0 WAITE	Description	
0	Wait input by $\overline{\text{WAIT}}$ pin disabled. $\overline{\text{WAIT}}$ pin can be used as I/O port.	(Initial value)
1	Wait input by $\overline{\text{WAIT}}$ pin enabled	

6.2.6 Memory Control Register (MCR)

Bit :	7	6	5	4	3	2	1	0
	TPC	BE	RCDM	CW2	MXC1	MXC0	RLW1	RLW0
Initial value :	0	0	0	0	0	0	0	0
R/W :	R/W	R/W	R/W	R/W	R/W	R/W	R/W	R/W

MCR is an 8-bit readable/writable register that selects the DRAM strobe control method, number of precharge cycles, access mode, address multiplexing shift size, and the number of wait states inserted during refreshing, when areas 2 to 5 are designated as DRAM interface.

MCR is initialized to H'00 by a power-on reset and in hardware standby mode. It is not initialized by a manual reset* or in software standby mode.

Note: * Manual reset is only supported in the H8S/2357 ZTAT.

Bit 7—TP Cycle Control (TPC): Selects whether a 1-state or 2-state precharge cycle (T_P) is to be used when areas 2 to 5 designated as DRAM space are accessed.

Bit 7 TPC	Description	
0	1-state precharge cycle is inserted	(Initial value)
1	2-state precharge cycle is inserted	

Bit 6—Burst Access Enable (BE): Selects enabling or disabling of burst access to areas 2 to 5 designated as DRAM space. DRAM space burst access is performed in fast page mode.

Bit 6 BE	Description	
0	Burst disabled (always full access)	(Initial value)
1	For DRAM space access, access in fast page mode	

Bit 5—RAS Down Mode (RCDM): When areas 2 to 5 are designated as DRAM space and access to DRAM is interrupted, RCDM selects whether the next DRAM access is waited for with the $\overline{\text{RAS}}$ signal held low (RAS down mode), or the $\overline{\text{RAS}}$ signal is driven high again (RAS up mode).

Bit 5 RCDM	Description	
0	DRAM interface: RAS up mode selected	(Initial value)
1	DRAM interface: RAS down mode selected	

Bit 4—2-CAS Method Select (CW2): Write 1 to this bit when areas 2 to 5 are designated as 8-bit DRAM space, and 0 otherwise.

Bit 4 CW2	Description	
0	16-bit DRAM space selected	(Initial value)
1	8-bit DRAM space selected	

Bits 3 and 2—Multiplex Shift Count 1 and 0 (MXC1, MXC0): These bits select the size of the shift to the lower half of the row address in row address/column address multiplexing for the DRAM interface. In burst operation on the DRAM interface, these bits also select the row address to be used for comparison.

Bit 3 MXC1	Bit 2 MXC0	Description
0	0	8-bit shift (Initial value) • When 8-bit access space is designated: Row address A_{23} to A_8 used for comparison • When 16-bit access space is designated: Row address A_{23} to A_9 used for comparison
	1	9-bit shift • When 8-bit access space is designated: Row address A_{23} to A_9 used for comparison • When 16-bit access space is designated: Row address A_{23} to A_{10} used for comparison
1	0	10-bit shift • When 8-bit access space is designated: Row address A_{23} to A_{10} used for comparison • When 16-bit access space is designated: Row address A_{23} to A_{11} used for comparison
	1	—

Bits 1 and 0—Refresh Cycle Wait Control 1 and 0 (RLW1, RLW0): These bits select the number of wait states to be inserted in a DRAM interface CAS-before-RAS refresh cycle. This setting is used for all areas designated as DRAM space. Wait input by the $\overline{\text{WAIT}}$ pin is disabled.

Bit 1 RLW1	Bit 0 RLW0	Description	
0	0	No wait state inserted	(Initial value)
	1	1 wait state inserted	
1	0	2 wait states inserted	
	1	3 wait states inserted	

6.2.7 DRAM Control Register (DRAMCR)

Bit :	7	6	5	4	3	2	1	0
	RFSHE	RCW	RMODE	CMF	CMIE	CKS2	CKS1	CKS0
Initial value :	0	0	0	0	0	0	0	0
R/W :	R/W	R/W	R/W	R/W	R/W	R/W	R/W	R/W

DRAMCR is an 8-bit readable/writable register that selects the DRAM refresh mode and refresh counter clock, and controls the refresh timer.

DRAMCR is initialized to H'00 by a power-on reset and in hardware standby mode. It is not initialized by a manual reset* or in software standby mode.

Note: * Manual reset is only supported in the H8S/2357 ZTAT.

Bit 7—Refresh Control (RFSHE): Selects whether or not refresh control is performed. When refresh control is not performed, the refresh timer can be used as an interval timer.

Bit 7 RFSHE	Description	
0	Refresh control is not performed	(Initial value)
1	Refresh control is performed	

Bit 6—RAS-CAS Wait (RCW): Controls wait state insertion in DRAM interface CAS-before-RAS refreshing.

Bit 6 RCW	Description	
0	Wait state insertion in CAS-before-RAS refreshing disabled $\overline{RAS}$ falls in T_{Rr} cycle	(Initial value)
1	One wait state inserted in CAS-before-RAS refreshing $\overline{RAS}$ falls in T_{Rc1} cycle	

Bit 5—Refresh Mode (RMODE): When refresh control is performed (RFSHE = 1), this bit selects whether normal refreshing (CAS-before-RAS refreshing for the DRAM interface) or self-refreshing is performed.

Bit 5 RMODE	Description	
0	DRAM interface CAS-before-RAS refreshing used	(Initial value)
1	Self-refreshing used	

Bit 4—Compare Match Flag (CMF): Status flag that indicates a match between the values of RTCNT and RTCOR.

When refresh control is performed (RFSHE = 1), 1 should be written to the CMF bit when writing to DRAMCR.

Bit 4 CMF	Description	
0	[Clearing condition] Cleared by reading the CMF flag when CMF = 1, then writing 0 to the CMF flag	(Initial value)
1	[Setting condition] Set when RTCNT = RTCOR	

Bit 3—Compare Match Interrupt Enable (CMIE): Enables or disables interrupt requests (CMI) by the CMF flag when the CMF flag in DRAMCR is set to 1.

When refresh control is performed (RFSHE = 1), the CMIE bit is always cleared to 0.

Bit 3 CMIE	Description	
0	Interrupt request (CMI) by CMF flag disabled	(Initial value)
1	Interrupt request (CMI) by CMF flag enabled	

Bits 2 to 0—Refresh Counter Clock Select (CKS2 to CKS0): These bits select the clock to be input to RTCNT from among 7 internal clocks obtained by dividing the system clock (ø). When the input clock is selected with bits CKS2 to CKS0, RTCNT begins counting up.

Bit 2 CKS2	Bit 1 CKS1	Bit 0 CKS0	Description	
0	0	0	Count operation disabled	(Initial value)
		1	Count uses ø/2	
	1	0	Count uses ø/8	
		1	Count uses ø/32	
1	0	0	Count uses ø/128	
		1	Count uses ø/512	
	1	0	Count uses ø/2048	
		1	Count uses ø/4096	

6.2.8 Refresh Timer/Counter (RTCNT)

Bit :	7	6	5	4	3	2	1	0
Initial value :	0	0	0	0	0	0	0	0
R/W :	R/W	R/W	R/W	R/W	R/W	R/W	R/W	R/W

RTCNT is an 8-bit readable/writable up-counter.

RTCNT counts up using the internal clock selected by bits CKS2 to CKS0 in DRAMCR.

When RTCNT matches RTCOR (compare match), the CMF flag in DRAMCR is set to 1 and RTCNT is cleared to H'00. If the RFSHE bit in DRAMCR is set to 1 at this time, a refresh cycle is started. Also, if the CMIE bit in DRAMCR is set to 1, a compare match interrupt (CMI) is generated.

RTCNT is initialized to H'00 by a power-on reset and in hardware standby mode. It is not initialized by a manual reset* or in software standby mode.

Note: * Manual reset is only supported in the H8S/2357 ZTAT.

6.2.9 Refresh Time Constant Register (RTCOR)

Bit :	7	6	5	4	3	2	1	0
Initial value :	1	1	1	1	1	1	1	1
R/W :	R/W	R/W	R/W	R/W	R/W	R/W	R/W	R/W

RTCOR is an 8-bit readable/writable register that sets the period for compare match operations with RTCNT.

The values of RTCOR and RTCNT are constantly compared, and if they match, the CMF flag in DRAMCR is set to 1 and RTCNT is cleared to H'00.

RTCOR is initialized to H'FF by a power-on reset and in hardware standby mode. It is not initialized by a manual reset* or in software standby mode.

Note: * Manual reset is only supported in the H8S/2357 ZTAT.

6.3 Overview of Bus Control

6.3.1 Area Partitioning

In advanced mode, the bus controller partitions the 16 Mbytes address space into eight areas, 0 to 7, in 2-Mbyte units, and performs bus control for external space in area units. Figure 6-2 shows an outline of the memory map.

Chip select signals ($\overline{CS0}$ to $\overline{CS7}$) can be output for each area.

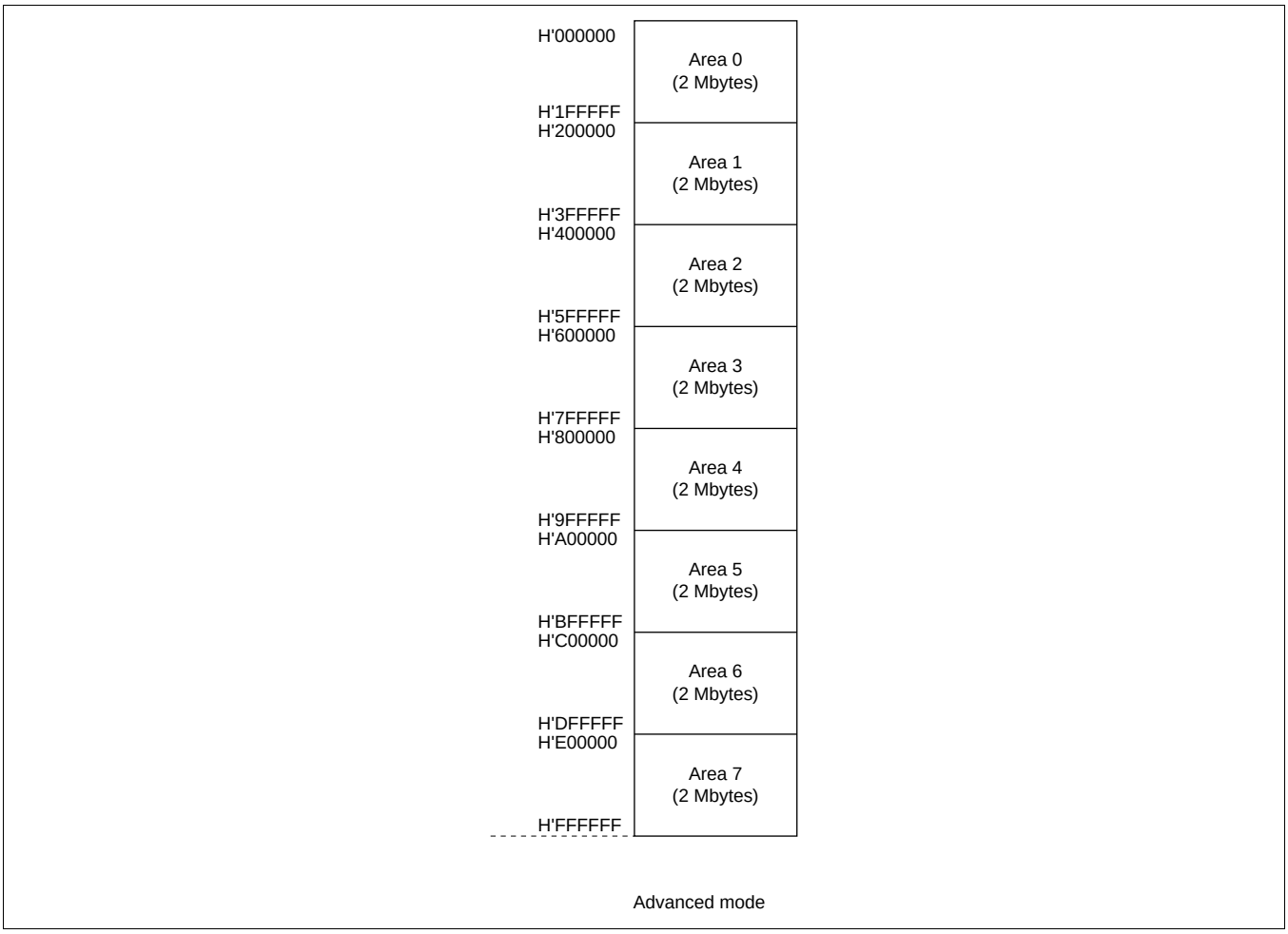

Figure 6-2 Overview of Area Partitioning

6.3.2 Bus Specifications

The external space bus specifications consist of three elements: bus width, number of access states, and number of program wait states.

The bus width and number of access states for on-chip memory and internal I/O registers are fixed, and are not affected by the bus controller.

Bus Width: A bus width of 8 or 16 bits can be selected with ABWCR. An area for which an 8-bit bus is selected functions as an 8-bit access space, and an area for which a 16-bit bus is selected functions as a16-bit access space.

If all areas are designated for 8-bit access, 8-bit bus mode is set; if any area is designated for 16-bit access, 16-bit bus mode is set. When the burst ROM interface is designated, 16-bit bus mode is always set.

Number of Access States: Two or three access states can be selected with ASTCR. An area for which 2-state access is selected functions as a 2-state access space, and an area for which 3-state access is selected functions as a 3-state access space.

With the DRAM interface and burst ROM interface, the number of access states may be determined without regard to ASTCR.

When 2-state access space is designated, wait insertion is disabled.

Number of Program Wait States: When 3-state access space is designated by ASTCR, the number of program wait states to be inserted automatically is selected with WCRH and WCRL. From 0 to 3 program wait states can be selected.

Table 6-3 shows the bus specifications for each basic bus interface area.

Table 6-3 Bus Specifications for Each Area (Basic Bus Interface)

		WCRH, WCRL		Bus Specifications (Basic Bus Interface)		
ABWCR ABWn	**ASTCR ASTn**	**Wn1**	**Wn0**	**Bus Width**	**Access States**	**Program Wait States**
0	0	—	—	16	2	0
	1	0	0		3	0
			1			1
		1	0			2
			1			3
1	0	—	—	8	2	0
	1	0	0		3	0
			1			1
		1	0			2
			1			3

6.3.3 Memory Interfaces

The H8S/2357 Group memory interfaces comprise a basic bus interface that allows direct connection of ROM, SRAM, and so on; a DRAM interface that allows direct connection of DRAM; and a burst ROM interface that allows direct connection of burst ROM. The interface can be selected independently for each area.

An area for which the basic bus interface is designated functions as normal space, an area for which the DRAM interface is designated functions as DRAM space, and an area for which the burst ROM interface is designated functions as burst ROM space.

6.3.4 Advanced Mode

The initial state of each area is basic bus interface, 3-state access space. The initial bus width is selected according to the operating mode. The bus specifications described here cover basic items only, and the sections on each memory interface (section 6.4, Basic Bus Interface, section 6.5, DRAM Interface, and section 6.7, Burst ROM Interface) should be referred to for further details.

Area 0: Area 0 includes on-chip ROM*, and in ROM-disabled expansion mode, all of area 0 is external space. In ROM-enabled expansion mode, the space excluding on-chip ROM* is external space.

When area 0 external space is accessed, the $\overline{CS0}$ signal can be output.

Either basic bus interface or burst ROM interface can be selected for area 0.

Note: * Applies to the on-chip ROM version only.

Areas 1 and 6: In external expansion mode, all of areas 1 and 6 is external space.

When area 1 and 6 external space is accessed, the $\overline{CS1}$ and $\overline{CS6}$ pin signals respectively can be output.

Only the basic bus interface can be used for areas 1 and 6.

Areas 2 to 5: In external expansion mode, all of areas 2 to 5 is external space.

When area 2 to 5 external space is accessed, signals $\overline{CS2}$ to $\overline{CS5}$ can be output.

Basic bus interface or DRAM interface can be selected for areas 2 to 5. With the DRAM interface, signals $\overline{CS2}$ to $\overline{CS5}$ are used as $\overline{RAS}$ signals.

Area 7: Area 7 includes the on-chip RAM and internal I/O registers. In external expansion mode, the space excluding the on-chip RAM and internal I/O registers is external space. The on-chip RAM is enabled when the RAME bit in the system control register (SYSCR) is set to 1; when the RAME bit is cleared to 0, the on-chip RAM is disabled and the corresponding space becomes external space .

When area 7 external space is accessed, the $\overline{CS7}$ signal can be output.

Only the basic bus interface can be used for the area 7 memory interface.

6.3.5 Chip Select Signals

The H8S/2357 Group can output chip select signals ($\overline{CS0}$ to $\overline{CS7}$) to areas 0 to 7, the signal being driven low when the corresponding external space area is accessed.

Figure 6-3 shows an example of $\overline{CSn}$ (n = 0 to 7) output timing.

Enabling or disabling of the $\overline{CSn}$ signal is performed by setting the data direction register (DDR) for the port corresponding to the particular $\overline{CSn}$ pin.

In ROM-disabled expansion mode, the $\overline{CS0}$ pin is placed in the output state after a power-on reset. Pins $\overline{CS1}$ to $\overline{CS7}$ are placed in the input state after a power-on reset, and so the corresponding DDR should be set to 1 when outputting signals $\overline{CS1}$ to $\overline{CS7}$.

In the ROM-enabled expansion mode, pins $\overline{CS0}$ to $\overline{CS7}$ are all placed in the input state after a power-on reset, and so the corresponding DDR bits should be set to 1 when outputting signals $\overline{CS0}$ to $\overline{CS7}$.

For details, see section 9, I/O Ports.

When areas 2 to 5 are designated as DRAM space, outputs $\overline{CS2}$ to $\overline{CS5}$ are used as $\overline{RAS}$ signals.

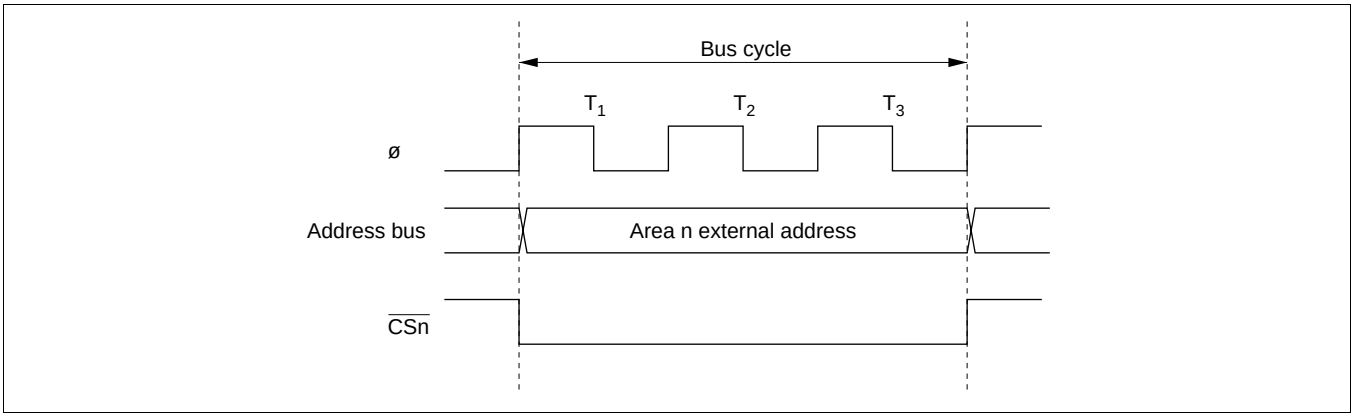

Figure 6-3 $\overline{CSn}$ Signal Output Timing (n = 0 to 7)

6.4 Basic Bus Interface

6.4.1 Overview

The basic bus interface enables direct connection of ROM, SRAM, and so on.

The bus specifications can be selected with ABWCR, ASTCR, WCRH, and WCRL (see table 6-3).

6.4.2 Data Size and Data Alignment

Data sizes for the CPU and other internal bus masters are byte, word, and longword. The bus controller has a data alignment function, and when accessing external space, controls whether the upper data bus (D_{15} to D_8) or lower data bus (D_7 to D_0) is used according to the bus specifications for the area being accessed (8-bit access space or 16-bit access space) and the data size.

8-Bit Access Space: Figure 6-4 illustrates data alignment control for the 8-bit access space. With the 8-bit access space, the upper data bus (D_{15} to D_8) is always used for accesses. The amount of data that can be accessed at one time is one byte: a word transfer instruction is performed as two byte accesses, and a longword transfer instruction, as four byte accesses.

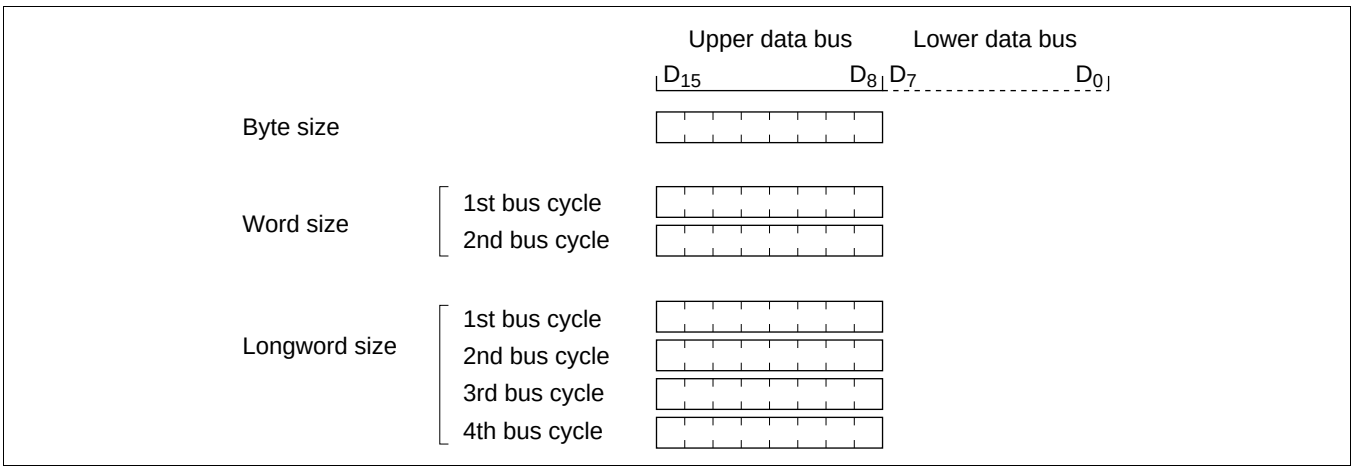

Figure 6-4 Access Sizes and Data Alignment Control (8-Bit Access Space)

16-Bit Access Space: Figure 6-5 illustrates data alignment control for the 16-bit access space. With the 16-bit access space, the upper data bus (D_{15} to D_8) and lower data bus (D_7 to D_0) are used for accesses. The amount of data that can be accessed at one time is one byte or one word, and a longword transfer instruction is executed as two word transfer instructions.

In byte access, whether the upper or lower data bus is used is determined by whether the address is even or odd. The upper data bus is used for an even address, and the lower data bus for an odd address.

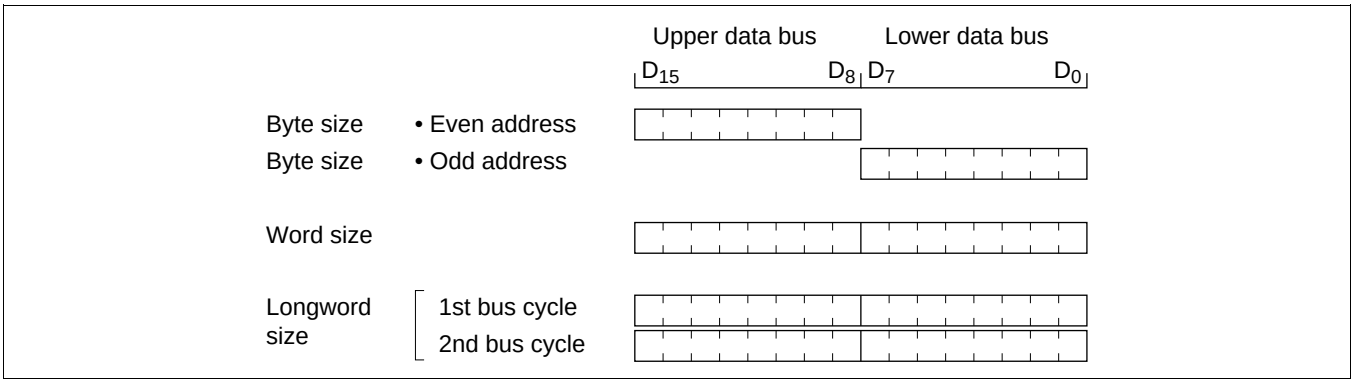

Figure 6-5 Access Sizes and Data Alignment Control (16-Bit Access Space)

6.4.3 Valid Strobes

Table 6-4 shows the data buses used and valid strobes for the access spaces.

In a read, the $\overline{RD}$ signal is valid without discrimination between the upper and lower halves of the data bus.

In a write, the $\overline{HWR}$ signal is valid for the upper half of the data bus, and the $\overline{LWR}$ signal for the lower half.

Table 6-4 Data Buses Used and Valid Strobes

Area	Access Size	Read/ Write	Address	Valid Strobe	Upper Data Bus (D_{15} to D_8)	Lower data bus (D_7 to D_0)
8-bit access space	Byte	Read	—	$\overline{RD}$	Valid	Invalid
		Write	—	$\overline{HWR}$		Hi-Z
16-bit access space	Byte	Read	Even	$\overline{RD}$	Valid	Invalid
			Odd		Invalid	Valid
		Write	Even	$\overline{HWR}$	Valid	Hi-Z
			Odd	$\overline{LWR}$	Hi-Z	Valid
	Word	Read	—	$\overline{RD}$	Valid	Valid
		Write	—	$\overline{HWR}$, $\overline{LWR}$	Valid	Valid

Legend:
Hi-Z: High impedance
Invalid: Input state; input value is ignored.

6.4.4 Basic Timing

8-Bit 2-State Access Space: Figure 6-6 shows the bus timing for an 8-bit 2-state access space. When an 8-bit access space is accessed, the upper half (D_{15} to D_8) of the data bus is used.

The $\overline{LWR}$ pin is fixed high. Wait states cannot be inserted.

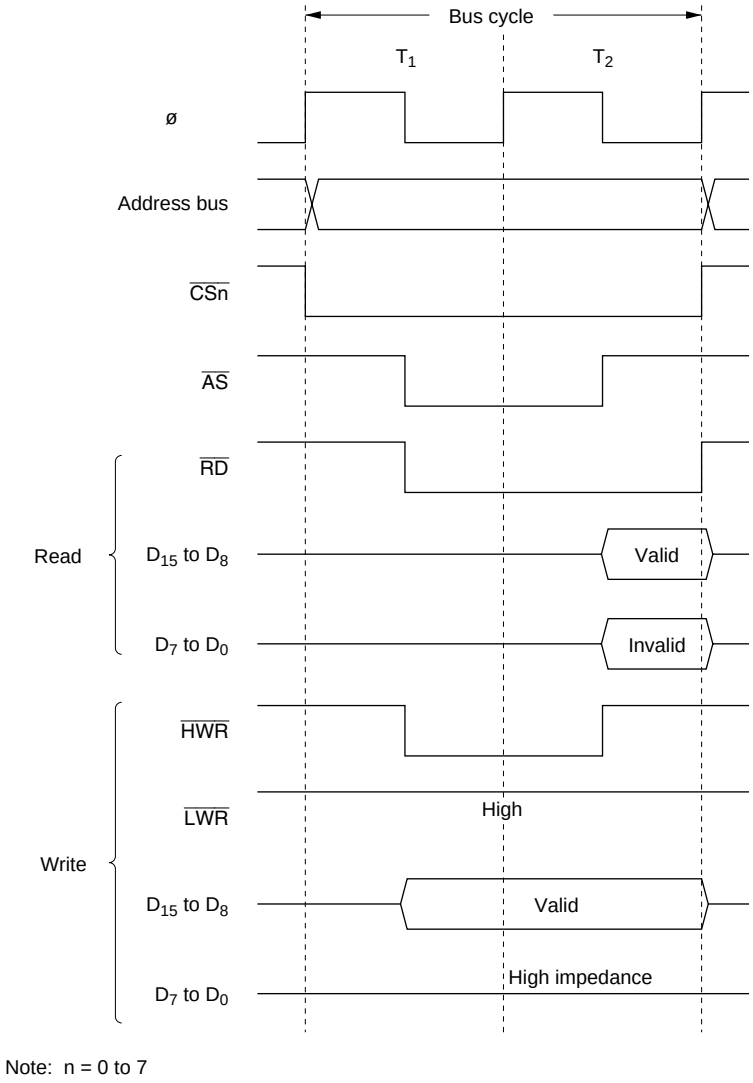

Figure 6-6 Bus Timing for 8-Bit 2-State Access Space

8-Bit 3-State Access Space: Figure 6-7 shows the bus timing for an 8-bit 3-state access space. When an 8-bit access space is accessed, the upper half (D_{15} to D_8) of the data bus is used.

The $\overline{LWR}$ pin is fixed high. Wait states can be inserted.

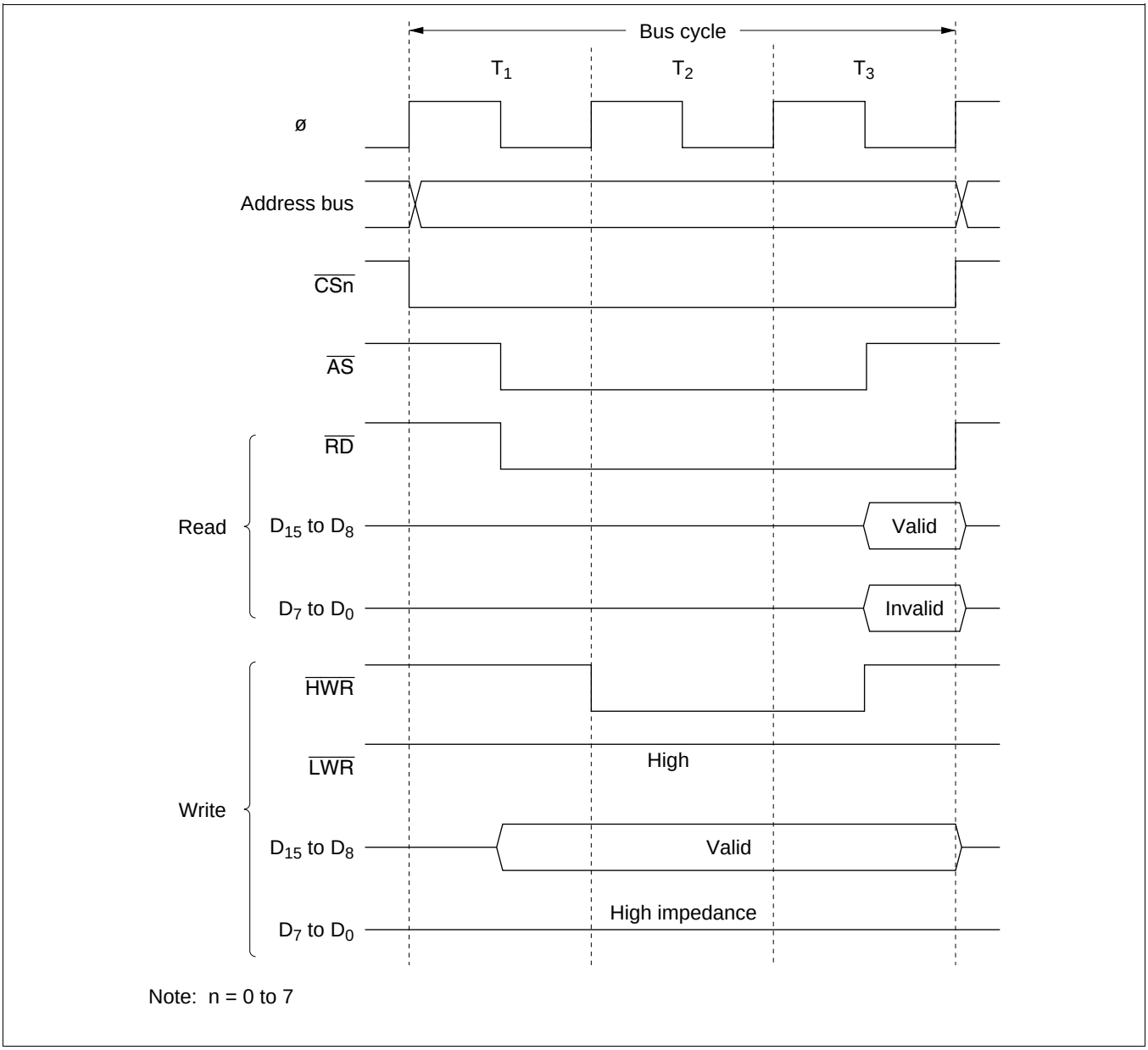

Figure 6-7 Bus Timing for 8-Bit 3-State Access Space

16-Bit 2-State Access Space: Figures 6-8 to 6-10 show bus timings for a 16-bit 2-state access space. When a 16-bit access space is accessed, the upper half (D_{15} to D_8) of the data bus is used for the even address, and the lower half (D_7 to D_0) for the odd address.

Wait states cannot be inserted.

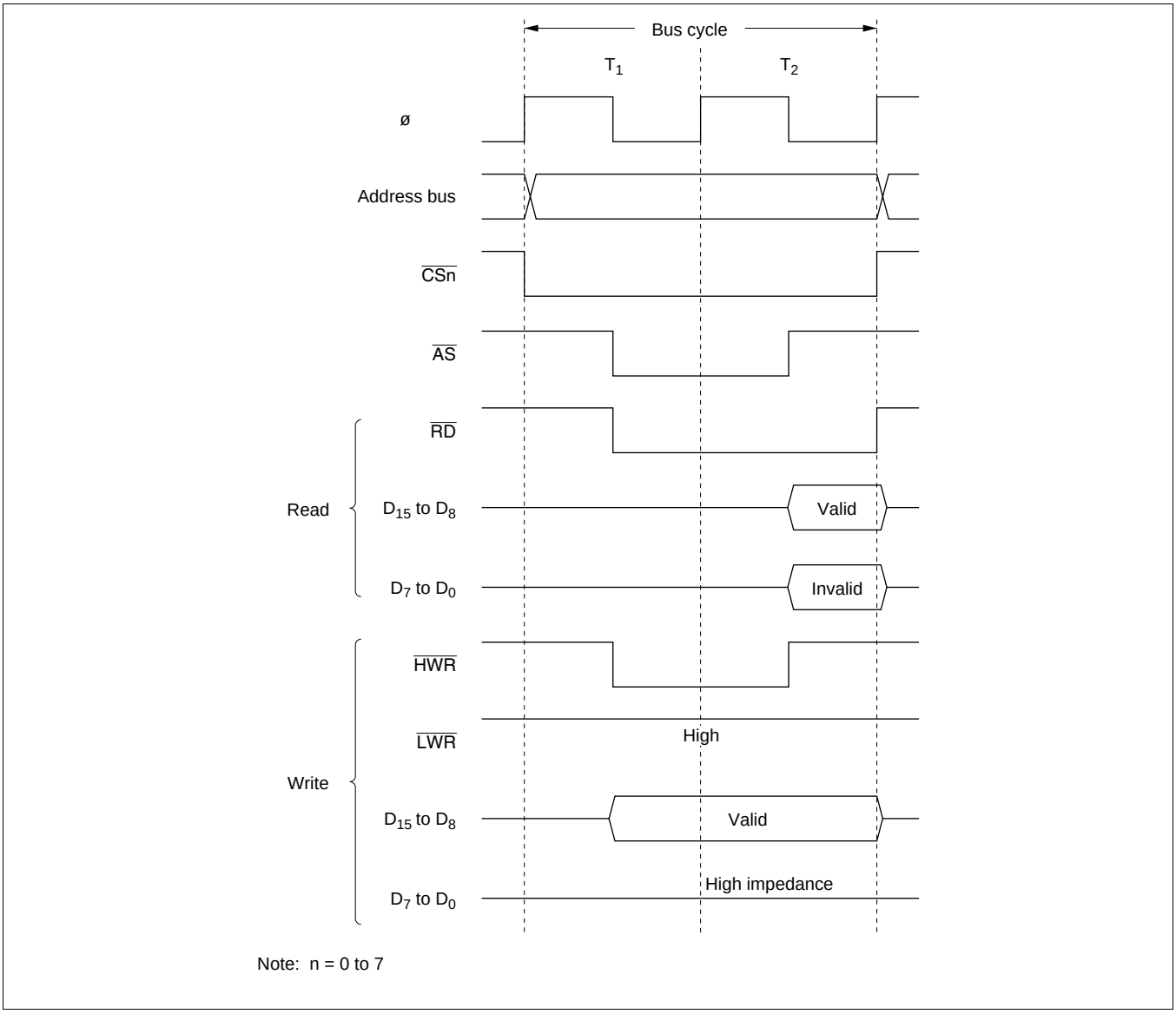

Figure 6-8 Bus Timing for 16-Bit 2-State Access Space (1) (Even Address Byte Access)

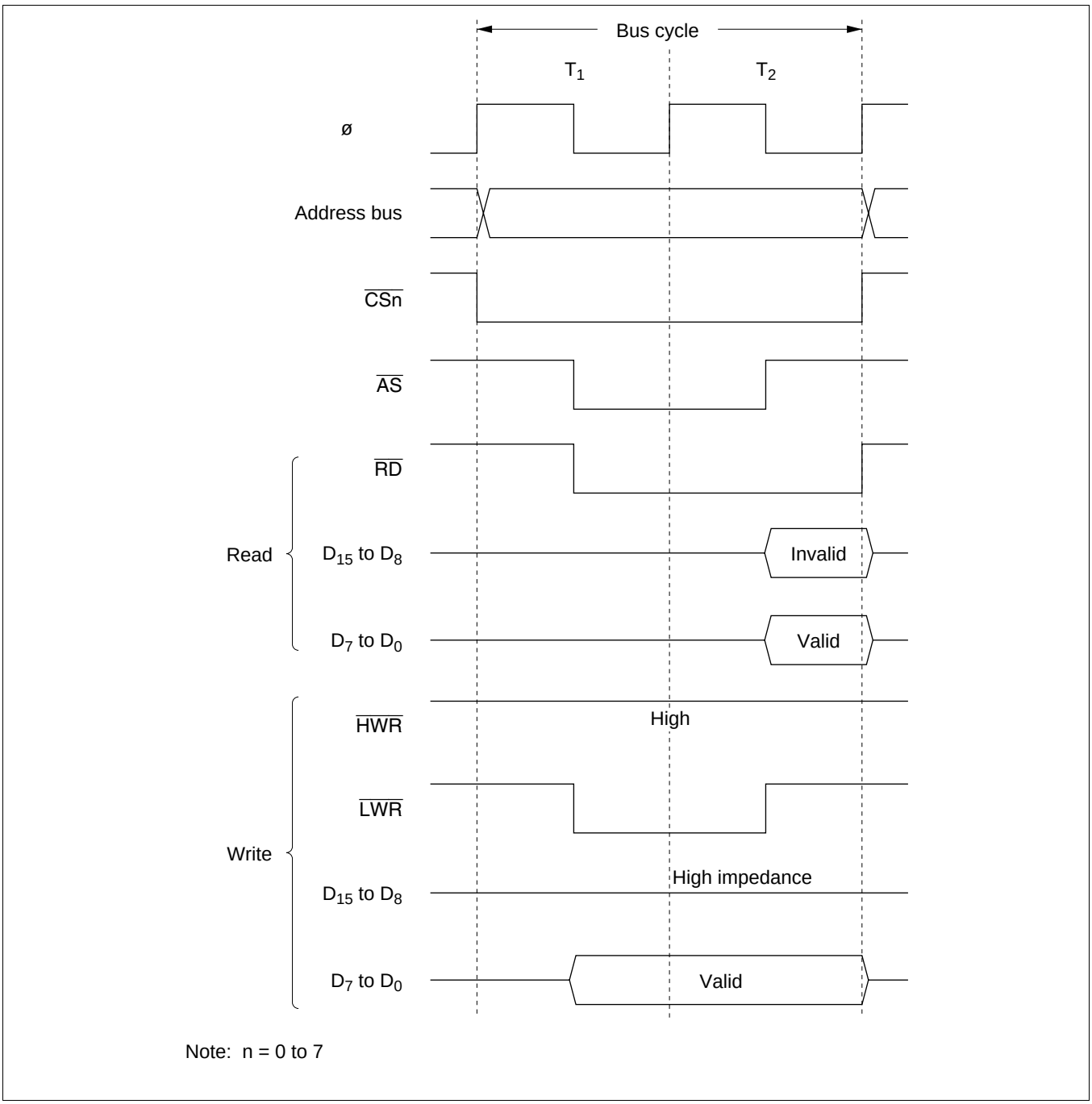

Figure 6-9 Bus Timing for 16-Bit 2-State Access Space (2) (Odd Address Byte Access)

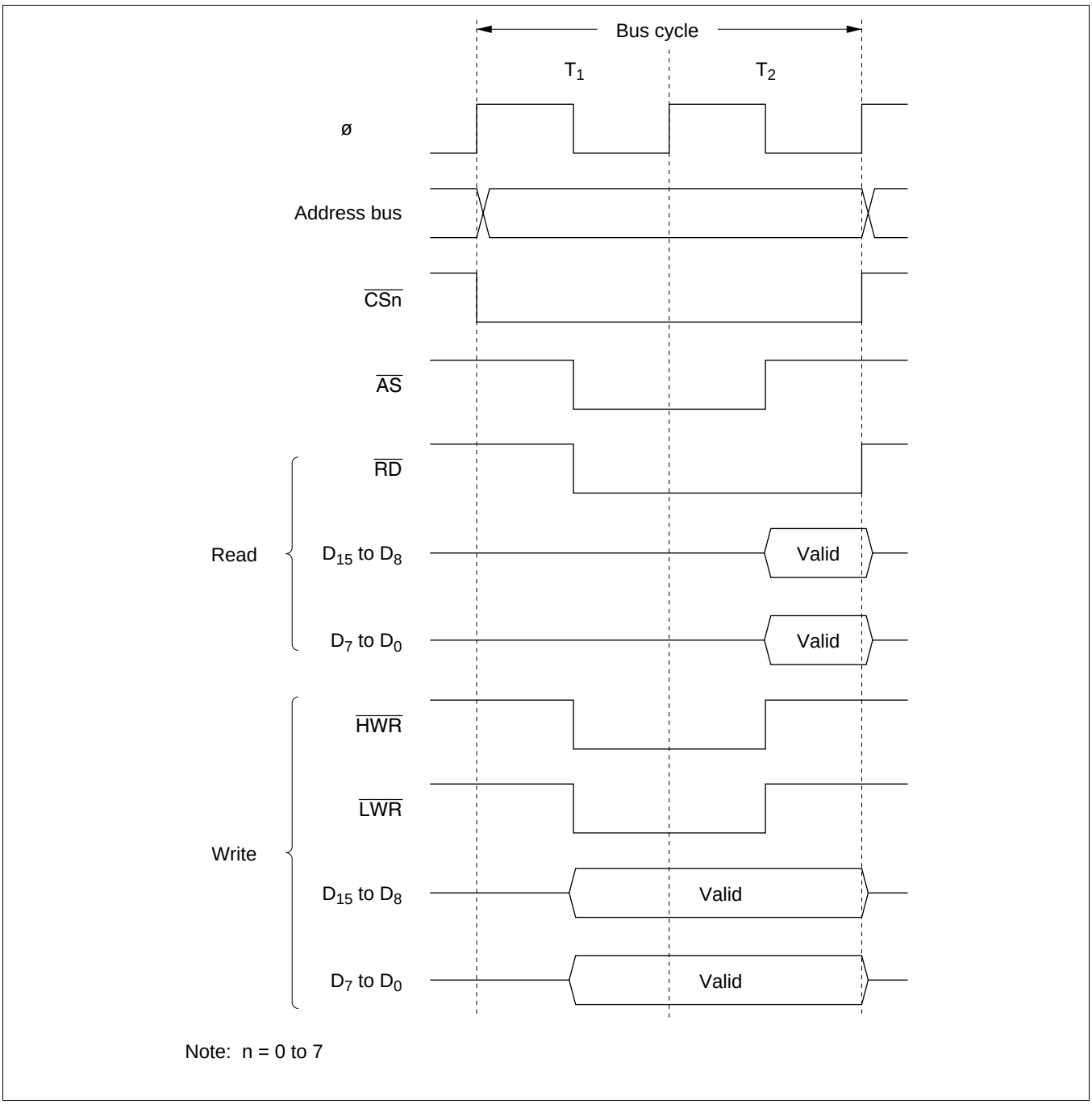

Figure 6-10 Bus Timing for 16-Bit 2-State Access Space (3) (Word Access)

16-Bit 3-State Access Space: Figures 6-11 to 6-13 show bus timings for a 16-bit 3-state access space. When a 16-bit access space is accessed , the upper half (D_{15} to D_8) of the data bus is used for the even address, and the lower half (D_7 to D_0) for the odd address.

Wait states can be inserted.

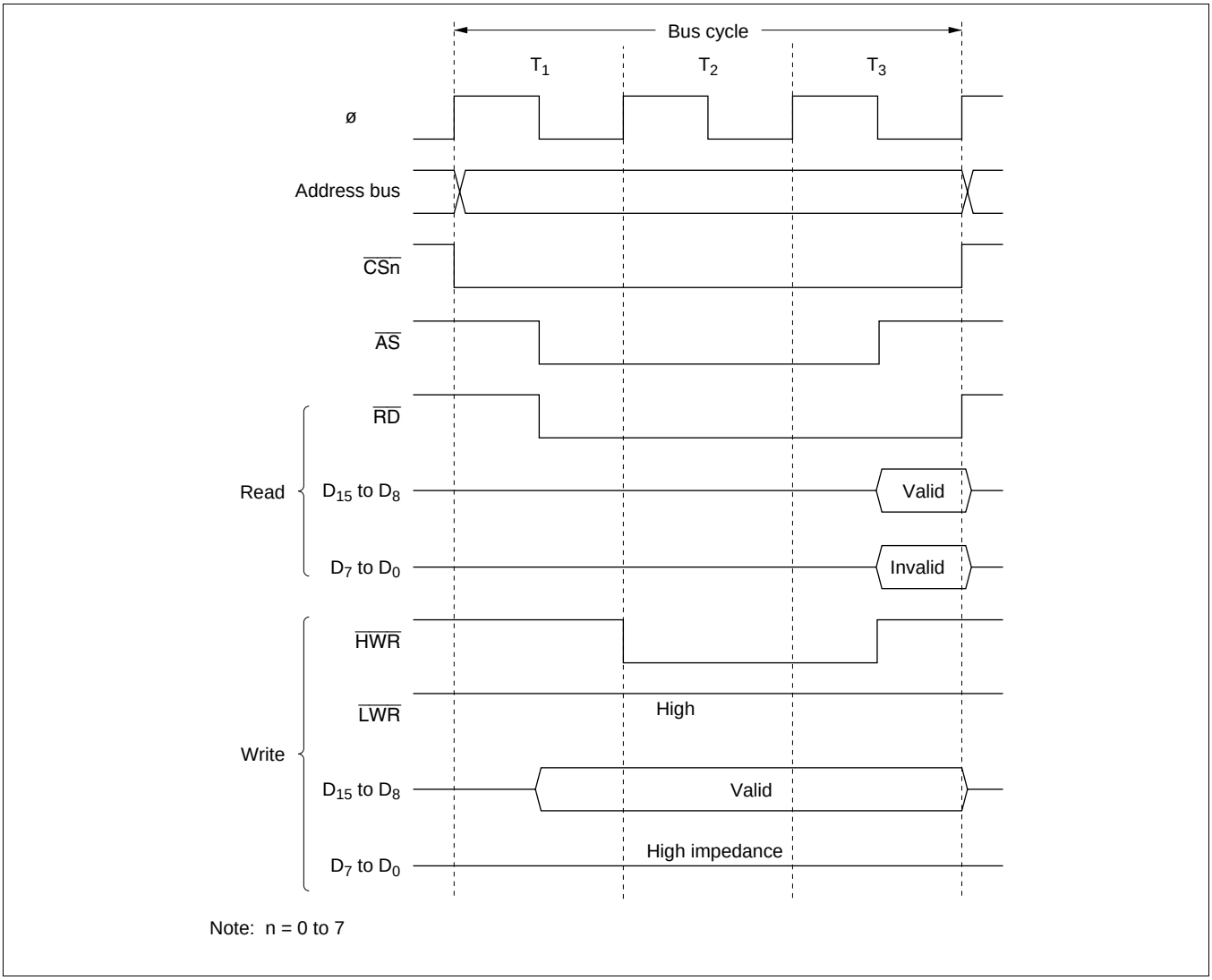

Figure 6-11 Bus Timing for 16-Bit 3-State Access Space (1) (Even Address Byte Access)

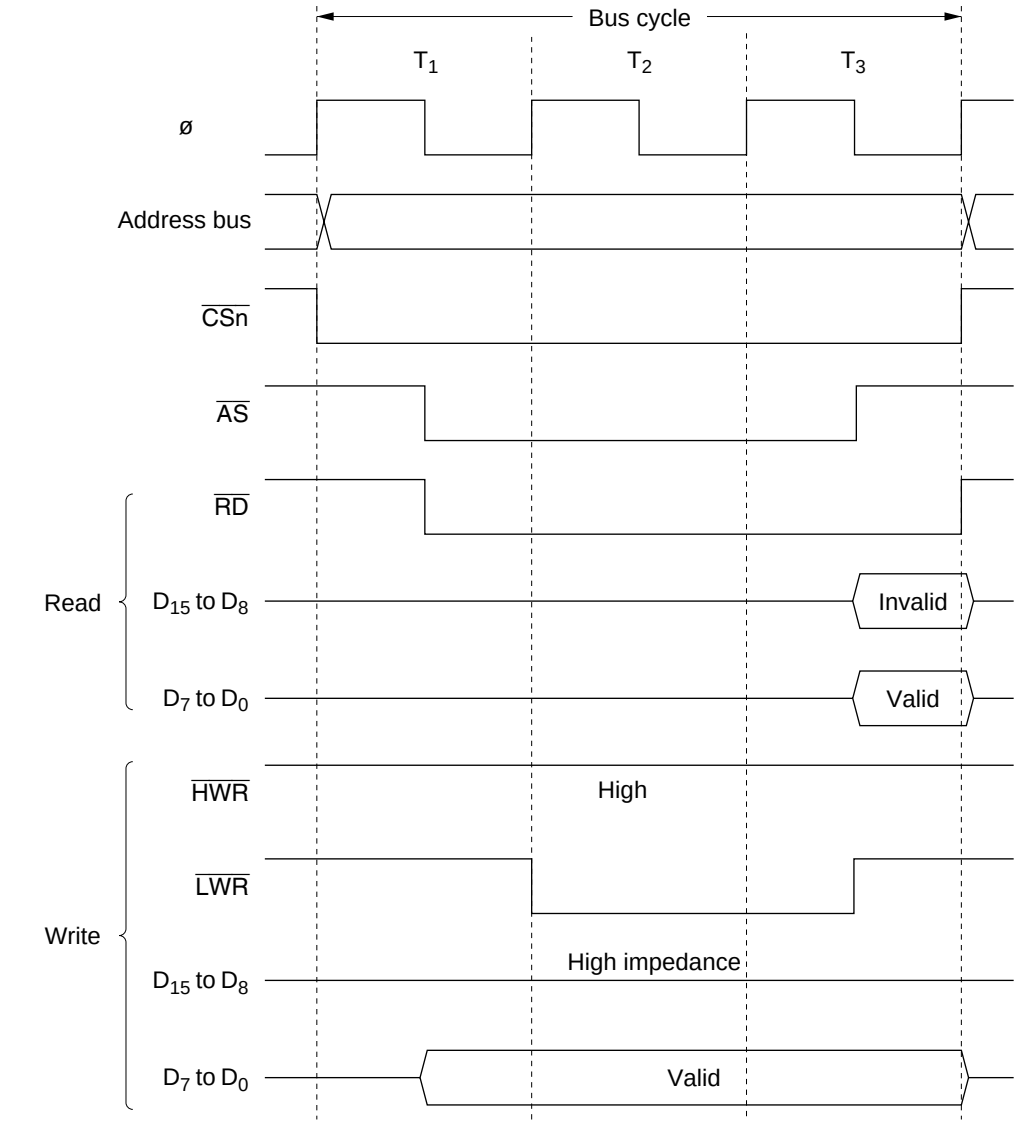

Note: n = 0 to 7

Figure 6-12 Bus Timing for 16-Bit 3-State Access Space (2) (Odd Address Byte Access)

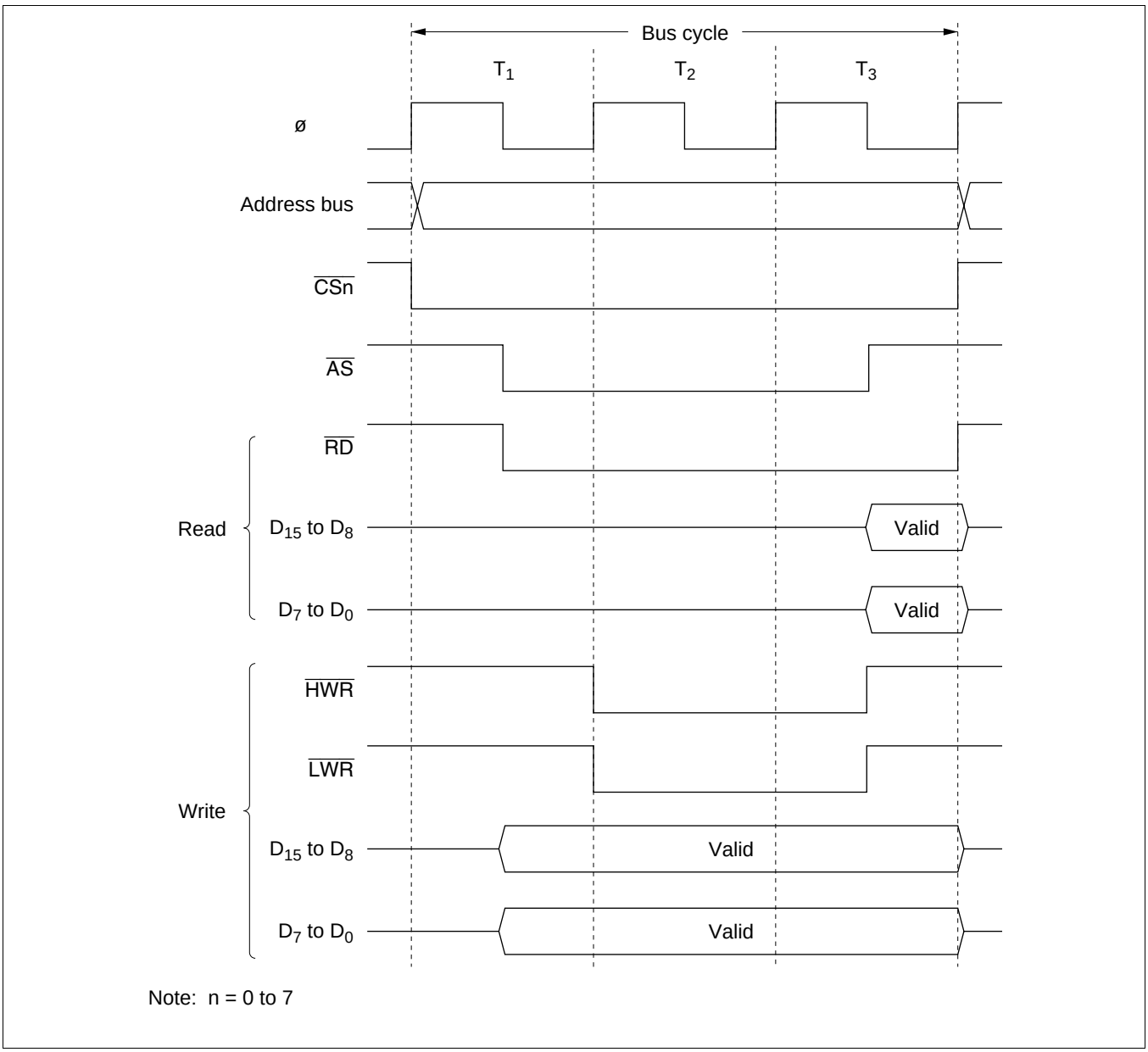

Figure 6-13 Bus Timing for 16-Bit 3-State Access Space (3) (Word Access)

6.4.5 Wait Control

When accessing external space, the H8S/2357 Group can extend the bus cycle by inserting one or more wait states (T_w). There are two ways of inserting wait states: program wait insertion and pin wait insertion using the $\overline{WAIT}$ pin.

Program Wait Insertion: From 0 to 3 wait states can be inserted automatically between the T_2 state and T_3 state on an individual area basis in 3-state access space, according to the settings of WCRH and WCRL.

Pin Wait Insertion: Setting the WAITE bit in BCRL to 1 enables wait insertion by means of the $\overline{WAIT}$ pin. Program wait insertion is first carried out according to the settings in WCRH and WCRL. Then , if the $\overline{WAIT}$ pin is low at the falling edge of ø in the last T_2 or T_w state, a T_w state is inserted. If the $\overline{WAIT}$ pin is held low, T_w states are inserted until it goes high.

This is useful when inserting four or more T_w states, or when changing the number of T_w states for different external devices.

The WAITE bit setting applies to all areas.

Figure 6-14 shows an example of wait state insertion timing.

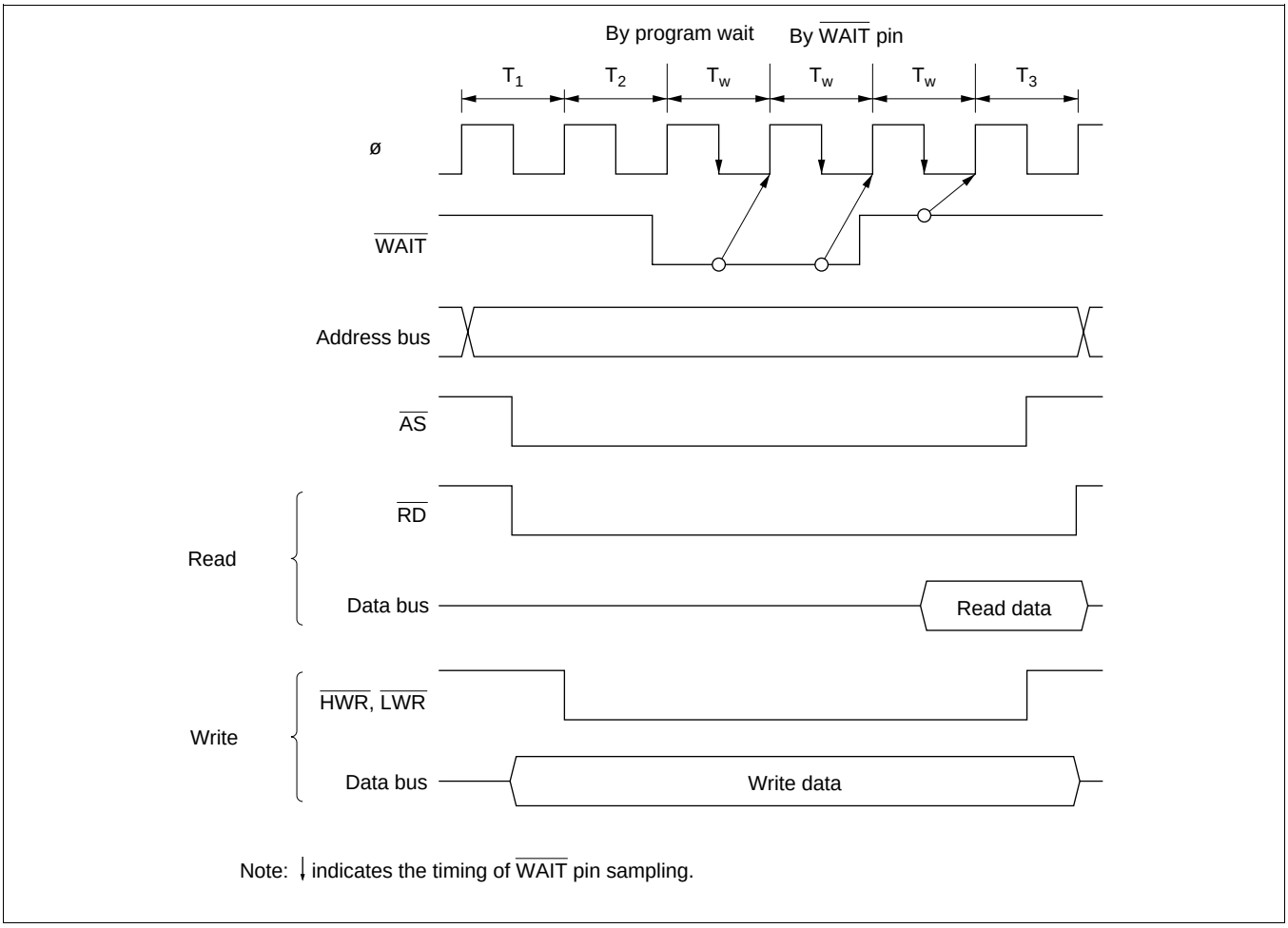

Figure 6-14 Example of Wait State Insertion Timing

The settings after a power-on reset are: 3-state access, 3 program wait state insertion, and WAIT input disabled. When a manual reset* is performed, the contents of bus controller registers are retained, and the wait control settings remain the same as before the reset.

Note: * Manual reset is only supported in the H8S/2357 ZTAT.

6.5 DRAM Interface

6.5.1 Overview

When the H8S/2357 Group is in advanced mode, external space areas 2 to 5 can be designated as DRAM space, and DRAM interfacing performed. With the DRAM interface, DRAM can be directly connected to the H8S/2357 Group. A DRAM space of 2, 4, or 8 Mbytes can be set by means of bits RMTS2 to RMTS0 in BCRH. Burst operation is also possible, using fast page mode.

6.5.2 Setting DRAM Space

Areas 2 to 5 are designated as DRAM space by setting bits RMTS2 to RMTS0 in BCRH. The relation between the settings of bits RMTS2 to RMTS0 and DRAM space is shown in table 6-5. Possible DRAM space settings are: one area (area 2), two areas (areas 2 and 3), and four areas (areas 2 to 5).

Table 6-5 Settings of Bits RMTS2 to RMTS0 and Corresponding DRAM Spaces

RMTS2	RMTS1	RMTS0	Area 5	Area 4	Area 3	Area 2
0	0	1	Normal space			DRAM space
	1	0	Normal space		DRAM space	
		1	DRAM space			

6.5.3 Address Multiplexing

With DRAM space, the row address and column address are multiplexed. In address multiplexing, the size of the shift of the row address is selected with bits MXC1 and MXC0 in MCR. Table 6-6 shows the relation between the settings of MXC1 and MXC0 and the shift size.

Table 6-6 Address Multiplexing Settings by Bits MXC1 and MXC0

	MCR		Shift	Address Pins														
	MXC1	MXC0	Size	A_{23} to A_{13}	A_{12}	A_{11}	A_{10}	A_9	A_8	A_7	A_6	A_5	A_4	A_3	A_2	A_1	A_0
Row address	0	0	8 bits	A_{23} to A_{13}	A_{20}	A_{19}	A_{18}	A_{17}	A_{16}	A_{15}	A_{14}	A_{13}	A_{12}	A_{11}	A_{10}	A_9	A_8
		1	9 bits	A_{23} to A_{13}	A_{12}	A_{20}	A_{19}	A_{18}	A_{17}	A_{16}	A_{15}	A_{14}	A_{13}	A_{12}	A_{11}	A_{10}	A_9
	1	0	10 bits	A_{23} to A_{13}	A_{12}	A_{11}	A_{20}	A_{19}	A_{18}	A_{17}	A_{16}	A_{15}	A_{14}	A_{13}	A_{12}	A_{11}	A_{10}
		1	Setting prohibited	—	—	—	—	—	—	—	—	—	—	—	—	—	—
Column address	—	—	—	A_{23} to A_{13}	A_{12}	A_{11}	A_{10}	A_9	A_8	A_7	A_6	A_5	A_4	A_3	A_2	A_1	A_0

6.5.4 Data Bus

If the bit in ABWCR corresponding to an area designated as DRAM space is set to 1, that area is designated as 8-bit DRAM space; if the bit is cleared to 0, the area is designated as 16-bit DRAM space. In 16-bit DRAM space, × 16-bit configuration DRAM can be connected directly.

In 8-bit DRAM space the upper half of the data bus, D_{15} to D_8, is enabled, while in 16-bit DRAM space both the upper and lower halves of the data bus, D_{15} to D_0, are enabled.

Access sizes and data alignment are the same as for the basic bus interface: see section 6.4.2, Data Size and Data Alignment.

6.5.5 Pins Used for DRAM Interface

Table 6-7 shows the pins used for DRAM interfacing and their functions.

Table 6-7 DRAM Interface Pins

Pin	With DRAM Setting	Name	I/O	Function
$\overline{HWR}$	$\overline{WE}$	Write enable	Output	When 2-CAS system is set, write enable for DRAM space access.
$\overline{LCAS}$	$\overline{LCAS}$	Lower column address strobe	Output	Lower column address strobe for 16-bit DRAM space access
$\overline{CS2}$	$\overline{RAS2}$	Row address strobe 2	Output	Row address strobe when area 2 is designated as DRAM space.
$\overline{CS3}$	$\overline{RAS3}$	Row address strobe 3	Output	Row address strobe when area 3 is designated as DRAM space.
$\overline{CS4}$	$\overline{RAS4}$	Row address strobe 4	Output	Row address strobe when area 4 is designated as DRAM space.
$\overline{CS5}$	$\overline{RAS5}$	Row address strobe 5	Output	Row address strobe when area 5 is designated as DRAM space.
$\overline{CAS}$	$\overline{UCAS}$	Upper column address strobe	Output	Upper column address strobe for DRAM space access
$\overline{WAIT}$	$\overline{WAIT}$	Wait	Input	Wait request signal
A_{12} to A_0	A_{12} to A_0	Address pins	Output	Row address/column address multiplexed output
D_{15} to D_0	D_{15} to D_0	Data pins	I/O	Data input/output pins

6.5.6 Basic Timing

Figure 6-15 shows the basic access timing for DRAM space. The basic DRAM access timing is 4 states. Unlike the basic bus interface, the corresponding bits in ASTCR control only enabling or disabling of wait insertion, and do not affect the number of access states. When the corresponding bit in ASTCR is cleared to 0, wait states cannot be inserted in the DRAM access cycle.

The 4 states of the basic timing consist of one T_p (precharge cycle) state, one T_r (row address output cycle), and two T_c (column address output cycle) states, T_{c1} and T_{c2}.

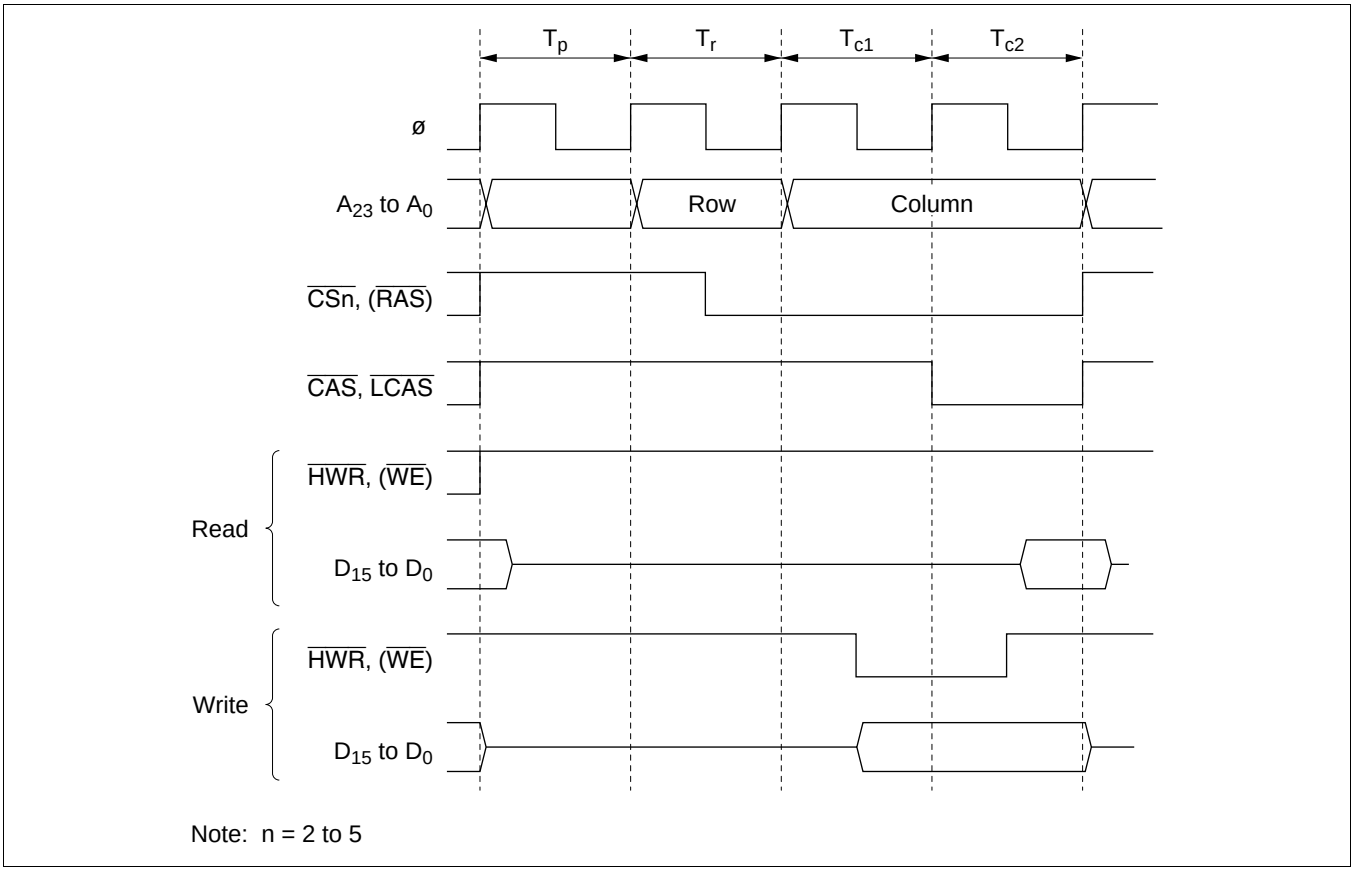

Figure 6-15 Basic Access Timing

6.5.7 Precharge State Control

When DRAM is accessed, RAS precharging time must be secured. With the H8S/2357 Series, one T_p state is always inserted when DRAM space is accessed. This can be changed to two T_p states by setting the TPC bit in MCR to 1. Set the appropriate number of T_p cycles according to the DRAM connected and the operating frequency of the H8S/2357 Group. Figure 6-16 shows the timing when two T_p states are inserted.

When the TPC bit is set to 1, two T_p states are also used for refresh cycles.

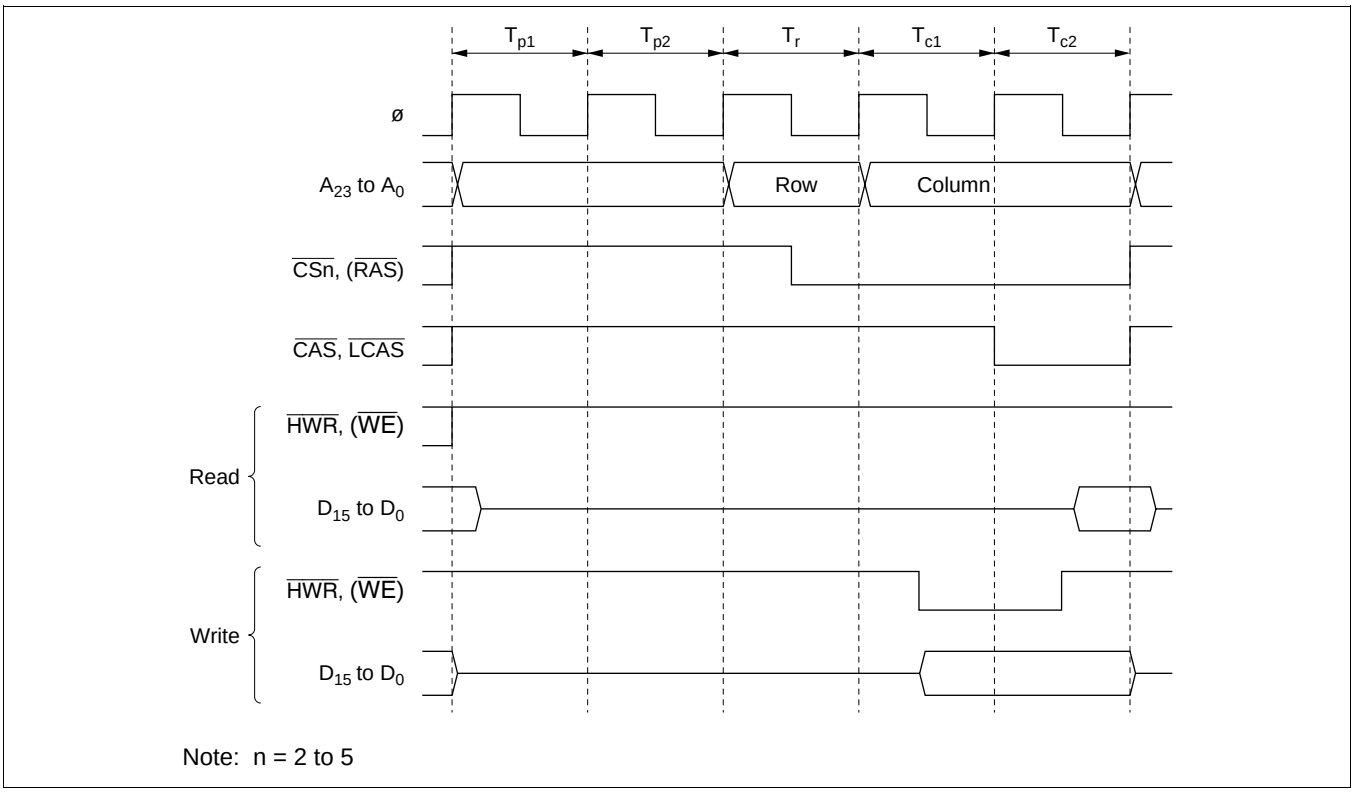

Figure 6-16 Timing with Two Precharge States

6.5.8 Wait Control

There are two ways of inserting wait states in a DRAM access cycle: program wait insertion and pin wait insertion using the $\overline{\text{WAIT}}$ pin.

Program Wait Insertion: When the bit in ASTCR corresponding to an area designated as DRAM space is set to 1, from 0 to 3 wait states can be inserted automatically between the T_{c1} state and T_{c2} state, according to the settings of WCRH and WCRL.

Pin Wait Insertion: When the WAITE bit in BCRH is set to 1, wait input by means of the $\overline{\text{WAIT}}$ pin is enabled regardless of the setting of the AST bit in ASTCR. When DRAM space is accessed in this state, a program wait is first inserted. If the $\overline{\text{WAIT}}$ pin is low at the falling edge of ø in the last T_{c1} or T_w state, another T_w state is inserted. If the $\overline{\text{WAIT}}$ pin is held low, T_w states are inserted until it goes high.

Figure 6-17 shows an example of wait state insertion timing.

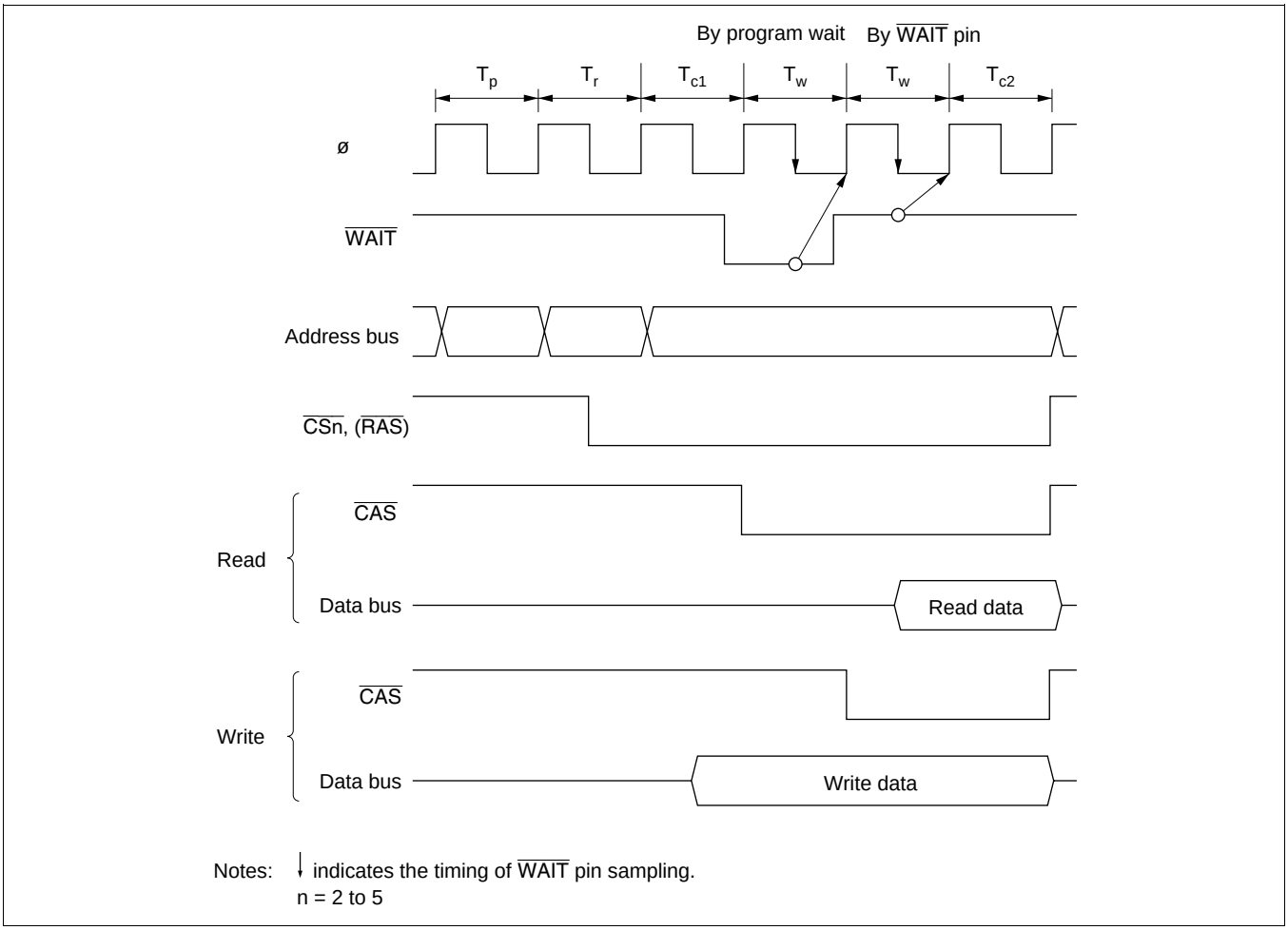

Figure 6-17 Example of Wait State Insertion Timing (CW2 = 1, 8-Bit Area Setting for Entire Space)

6.5.9 Byte Access Control

When DRAM with a ×16 configuration is connected, the 2-CAS system can be used for the control signals required for byte access.

When the CW2 bit is cleared to 0 in MCR, the 2-CAS system is selected. Figure 6-18 shows the control timing in the 2-CAS system, and figure 6-19 shows an example 2-CAS system DRAM connection.

When only DRAM with a ×8 configuration is connected, set the CW2 bit to 1 in MCR.

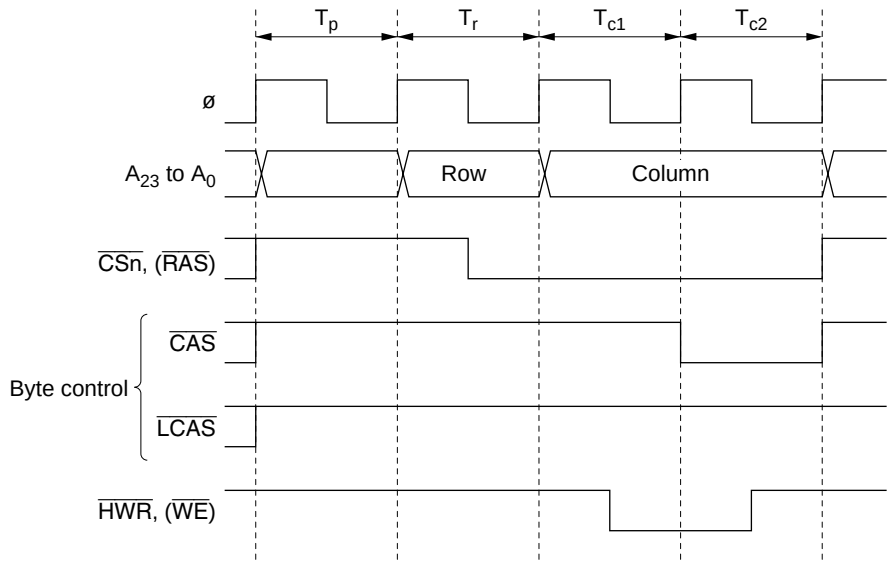

Note: n = 2 to 5

Figure 6-18 2-CAS System Control Timing (Upper Byte Write Access)

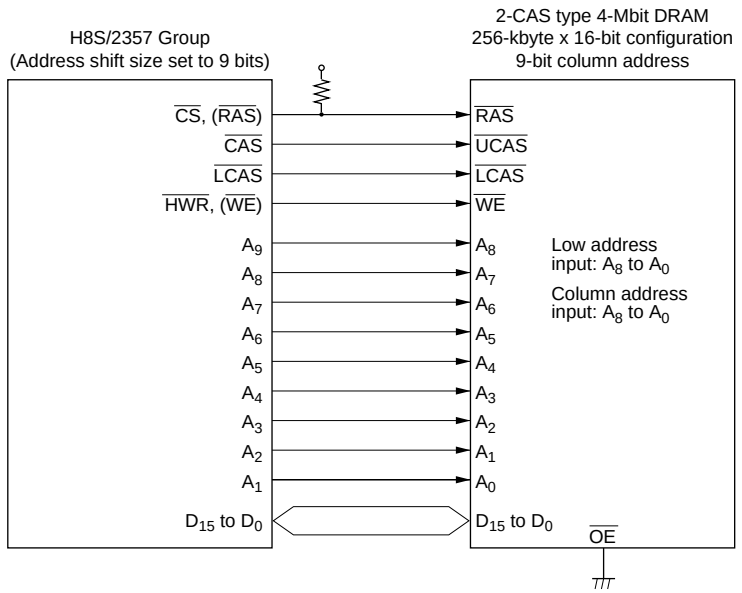

Figure 6-19 Example of 2-CAS System Connection

6.5.10 Burst Operation

With DRAM, in addition to full access (normal access) in which data is accessed by outputting a row address for each access, a fast page mode is also provided which can be used when making a number of consecutive accesses to the same row address. This mode enables fast (burst) access of data by simply changing the column address after the row address has been output. Burst access can be selected by setting the BE bit in MCR to 1.

Burst Access (Fast Page Mode) Operation Timing: Figure 6-20 shows the operation timing for burst access. When there are consecutive access cycles for DRAM space, the $\overline{CAS}$ signal and column address output cycles (two states) continue as long as the row address is the same for consecutive access cycles. The row address used for the comparison is set with bits MXC1 and MXC0 in MCR.

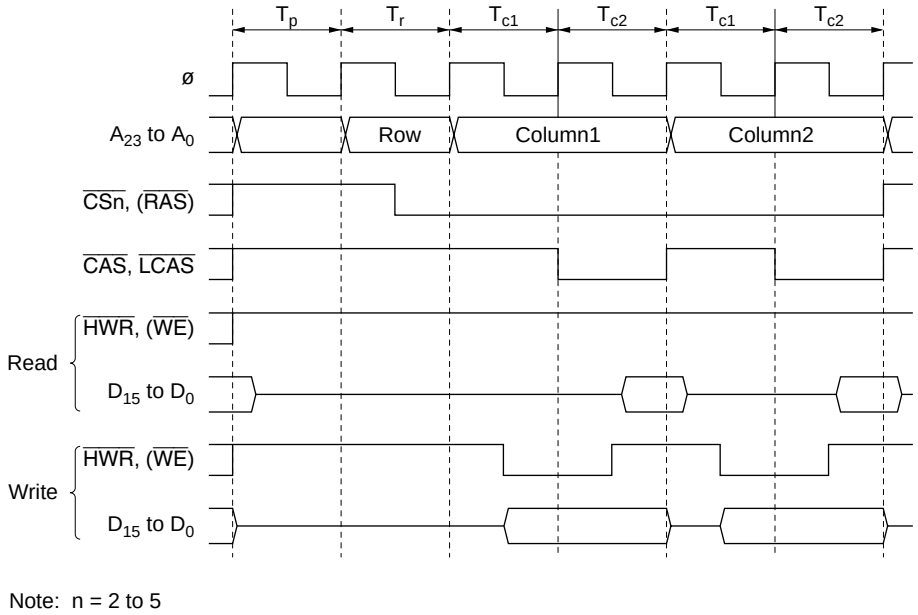

Figure 6-20 Operation Timing in Fast Page Mode

The bus cycle can also be extended in burst access by inserting wait states. The wait state insertion method and timing are the same as for full access. For details, see section 6.5.8, Wait Control.

RAS Down Mode and RAS Up Mode: Even when burst operation is selected, it may happen that access to DRAM space is not continuous, but is interrupted by access to another space. In this case, if the $\overline{RAS}$ signal is held low during the access to the other space, burst operation can be resumed when the same row address in DRAM space is accessed again.

- RAS down mode

  To select RAS down mode, set the RCDM bit in MCR to 1. If access to DRAM space is interrupted and another space is accessed, the $\overline{RAS}$ signal is held low during the access to the other space, and burst access is performed if the row address of the next DRAM space access is the same as the row address of the previous DRAM space access. Figure 6-21 shows an example of the timing in RAS down mode.

  Note, however, that the $\overline{RAS}$ signal will go high if a refresh operation interrupts RAS down mode.

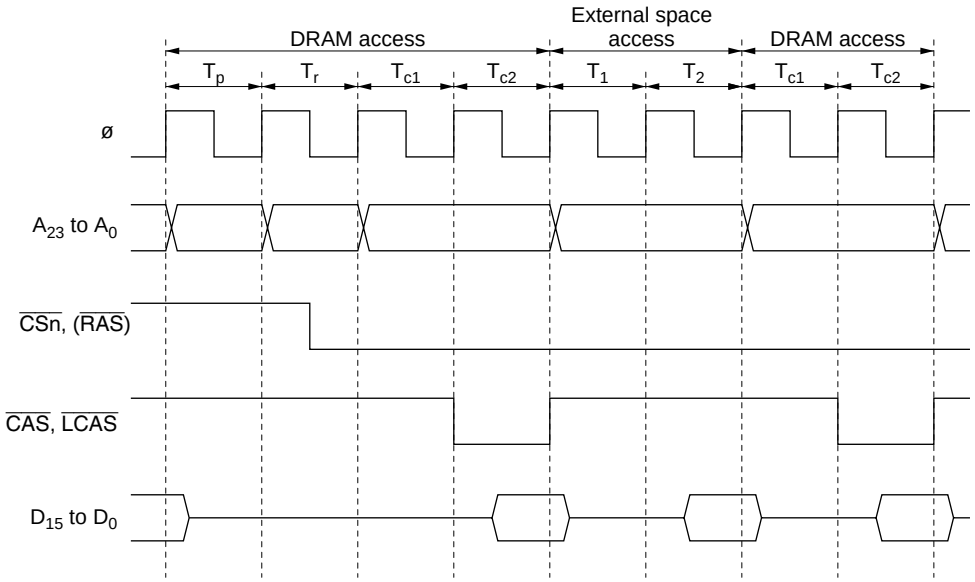

Note: n = 2 to 5

Figure 6-21 Example of Operation Timing in RAS Down Mode

- RAS up mode

  To select RAS up mode, clear the RCDM bit in MCR to 0. Each time access to DRAM space is interrupted and another space is accessed, the $\overline{RAS}$ signal goes high again. Burst operation is only performed if DRAM space is continuous. Figure 6-22 shows an example of the timing in RAS up mode.

  In the case of burst ROM space access, the $\overline{RAS}$ signal is not restored to the high level.

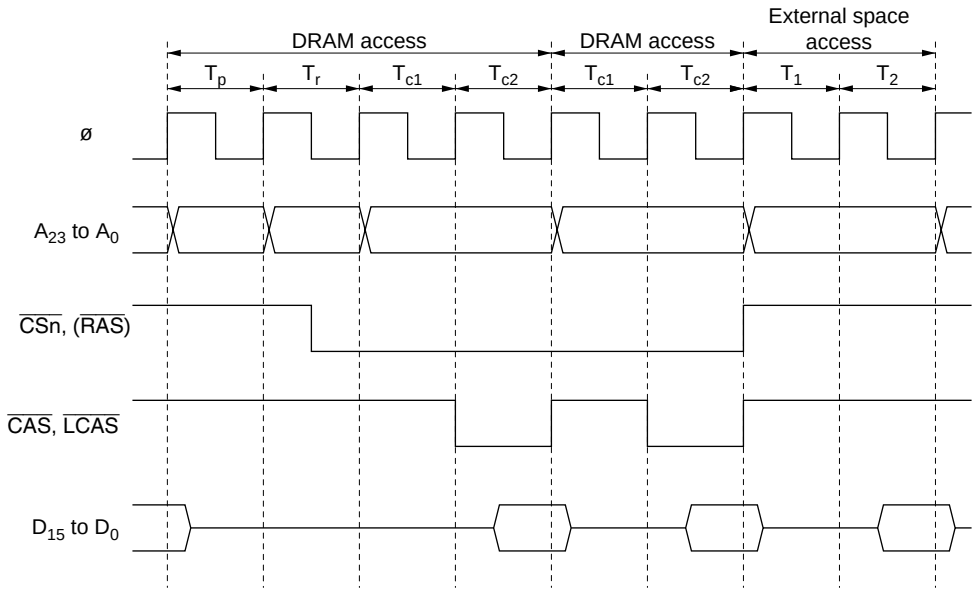

Note: n = 2 to 5

Figure 6-22 Example of Operation Timing in RAS Up Mode

6.5.11 Refresh Control

The H8S/2357 Group is provided with a DRAM refresh control function. Either of two refreshing methods can be selected: CAS-before-RAS (CBR) refreshing, or self-refreshing.

CAS-before-RAS (CBR) Refreshing: To select CBR refreshing, set the RFSHE bit in DRAMCR to 1, and clear the RMODE bit to 0.

With CBR refreshing, RTCNT counts up using the input clock selected by bits CKS2 to CKS0 in DRAMCR, and when the count matches the value set in RTCOR (compare match), refresh control is performed. At the same time, RTCNT is reset and starts counting again from H'00. Refreshing is thus repeated at fixed intervals determined by RTCOR and bits CKS2 to CKS0. Set a value in RTCOR and bits CKS2 to CKS0 that will meet the refreshing interval specification for the DRAM used.

When bits CKS2 to CKS0 are set, RTCNT starts counting up. RTCNT and RTCOR settings should therefore be completed before setting bits CKS2 to CKS0.

Do not clear the CMF flag when refresh control is being performed (RFSHE = 1).

RTCNT operation is shown in figure 6-23, compare match timing in figure 6-24, and CBR refresh timings in figure 6-25.

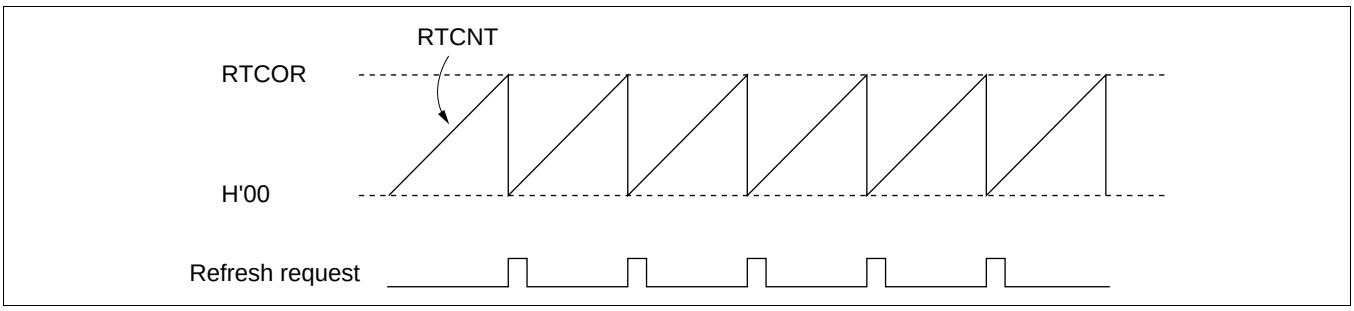

Figure 6-23 RTCNT Operation

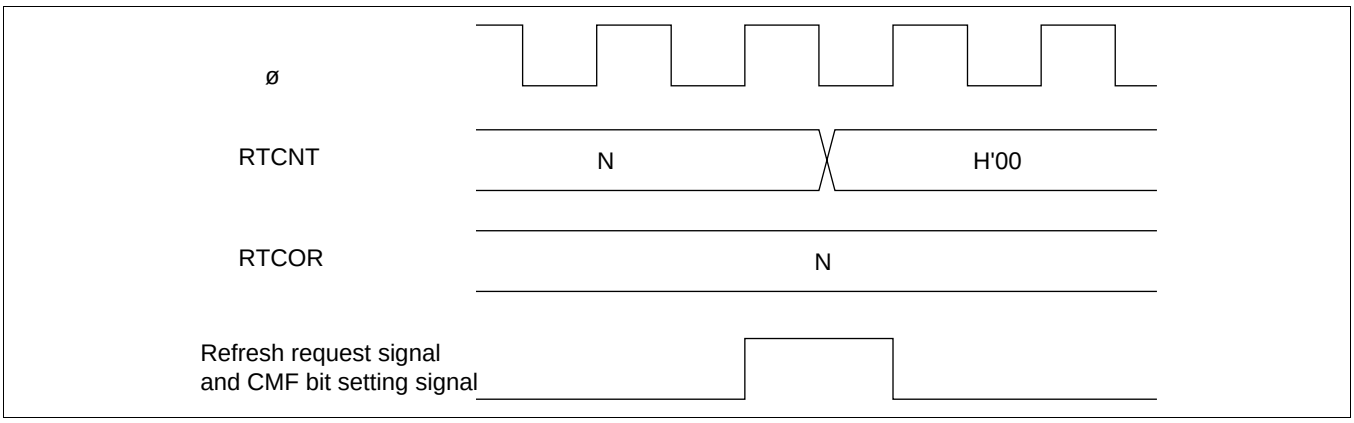

Figure 6-24 Compare Match Timing

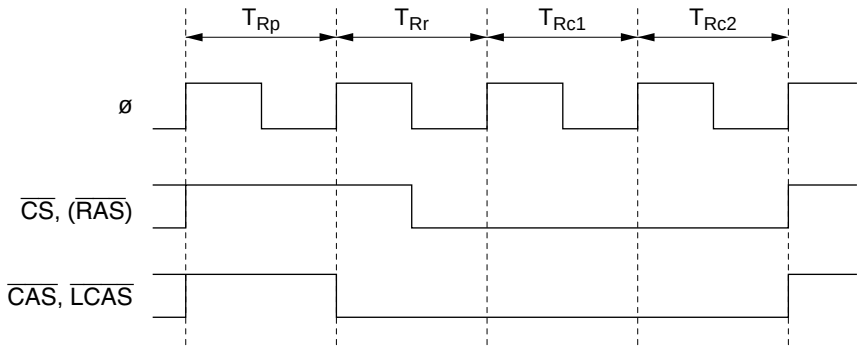

Note: n = 2 to 5

Figure 6-25 CBR Refresh Timing

When the RCW bit is set to 1, $\overline{RAS}$ signal output is delayed by one cycle. The width of the $\overline{RAS}$ signal should be adjusted with bits RLW1 and RLW0. These bits are only enabled in refresh operations.

Figure 6-26 shows the timing when the RCW bit is set to 1.

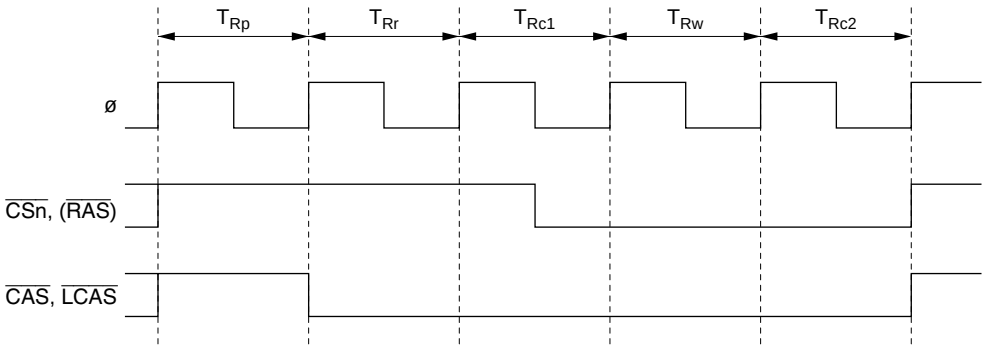

Note: n = 2 to 5

Figure 6-26 CBR Refresh Timing (When RCW = 1, RLW1 = 0, RLW0 = 1)

Self-Refreshing: A self-refresh mode (battery backup mode) is provided for DRAM as a kind of standby mode. In this mode, refresh timing and refresh addresses are generated within the DRAM.

To select self-refreshing, set the RFSHE bit and RMODE bit in DRAMCR to 1. Then, when a SLEEP instruction is executed to enter software standby mode, the $\overline{CAS}$ and $\overline{RAS}$ signals are output and DRAM enters self-refresh mode, as shown in figure 6-27.

When software standby mode is exited, the RMODE bit is cleared to 0 and self-refresh mode is cleared.

When switching to software standby mode, if there is a CBR refresh request, CBR refreshing is executed before self-refresh mode is entered.

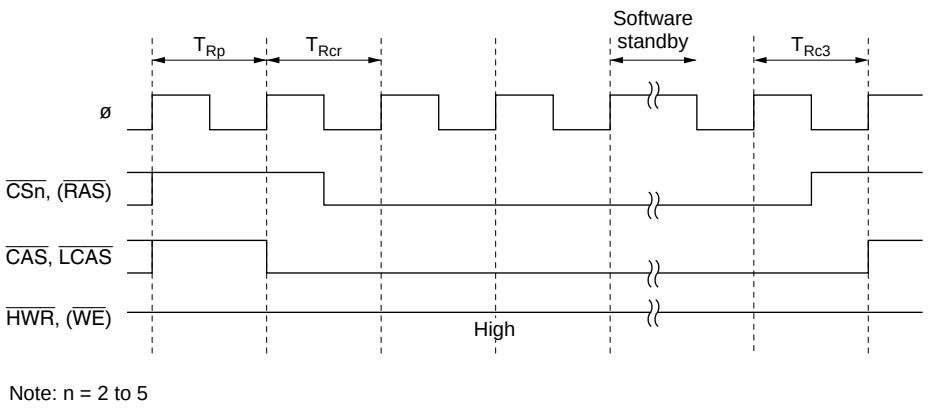

Note: n = 2 to 5

Figure 6-27 Self-Refresh Timing (When CW2 = 1, or CW2 = 0 and LCASS = 0)

6.6 DMAC Single Address Mode and DRAM Interface

When burst mode is selected with the DRAM interface, the $\overline{DACK}$ output timing can be selected with the DDS bit. When DRAM space is accessed in DMAC single address mode at the same time, whether or not burst access is to be performed is selected.

6.6.1 When DDS = 1

Burst access is performed by determining the address only, irrespective of the bus master. The $\overline{DACK}$ output goes low from the T_{C1} state in the case of the DRAM interface.

Figure 6-28 shows the $\overline{DACK}$ output timing for the DRAM interface when DDS = 1.

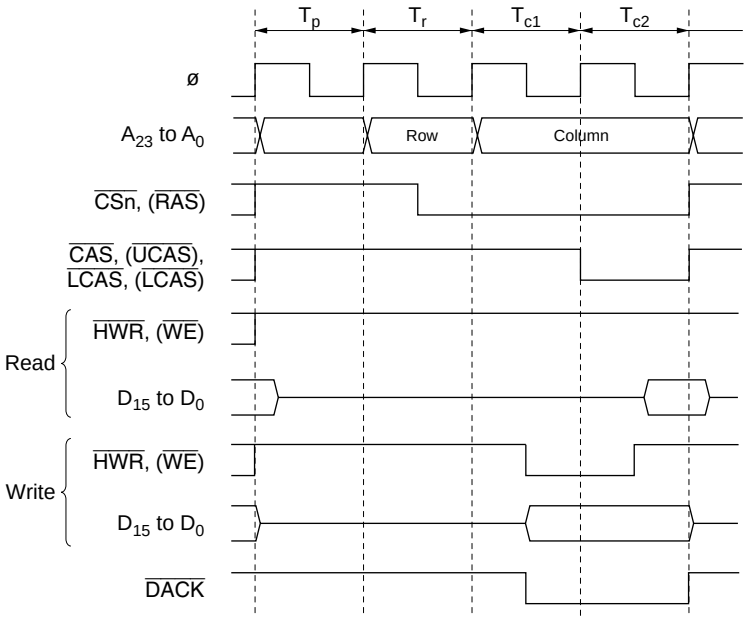

Note: n = 2 to 5

Figure 6-28 $\overline{DACK}$ Output Timing when DDS = 1 (Example of DRAM Access)

6.6.2 When DDS = 0

When DRAM space is accessed in DMAC single address mode, full access (normal access) is always performed. The $\overline{\text{DACK}}$ output goes low from the T_r state in the case of the DRAM interface.

In modes other than DMAC single address mode, burst access can be used when accessing DRAM space.

Figure 6-29 shows the $\overline{\text{DACK}}$ output timing for the DRAM interface when DDS = 0.

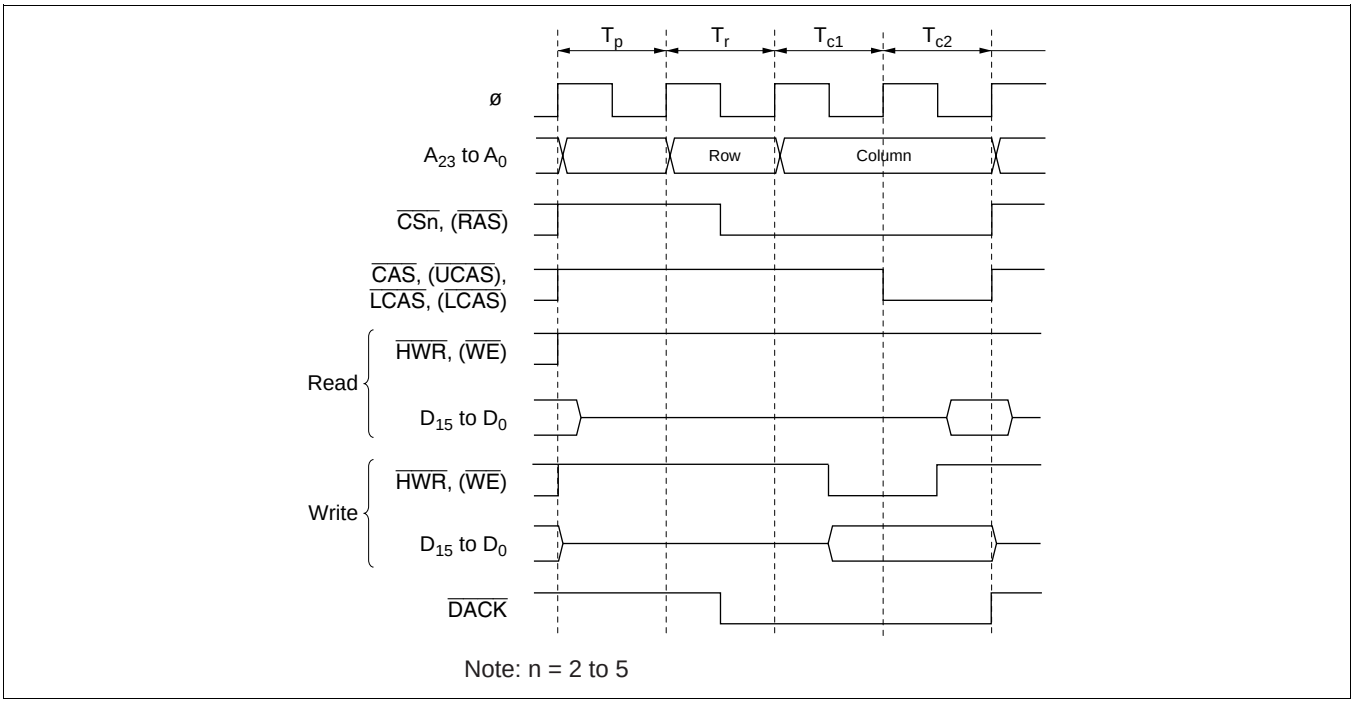

Figure 6-29 $\overline{\text{DACK}}$ Output Timing when DDS = 0 (Example of DRAM Access)

6.7 Burst ROM Interface

6.7.1 Overview

With the H8S/2357 Group, external space area 0 can be designated as burst ROM space, and burst ROM interfacing can be performed. The burst ROM space interface enables 16-bit configuration ROM with burst access capability to be accessed at high speed.

Area 0 can be designated as burst ROM space by means of the BRSTRM bit in BCRH. Consecutive burst accesses of a maximum of 4 words or 8 words can be performed for CPU instruction fetches only. One or two states can be selected for burst access.

6.7.2 Basic Timing

The number of states in the initial cycle (full access) of the burst ROM interface is in accordance with the setting of the AST0 bit in ASTCR. Also, when the AST0 bit is set to 1, wait state insertion is possible. One or two states can be selected for the burst cycle, according to the setting of the BRSTS1 bit in BCRH. Wait states cannot be inserted. When area 0 is designated as burst ROM space, it becomes 16-bit access space regardless of the setting of the ABW0 bit in ABWCR.

When the BRSTS0 bit in BCRH is cleared to 0, burst access of up to 4 words is performed; when the BRSTS0 bit is set to 1, burst access of up to 8 words is performed.

The basic access timing for burst ROM space is shown in figures 6-30 (a) and (b). The timing shown in figure 6-30 (a) is for the case where the AST0 and BRSTS1 bits are both set to 1, and that in figure 6-30 (b) is for the case where both these bits are cleared to 0.

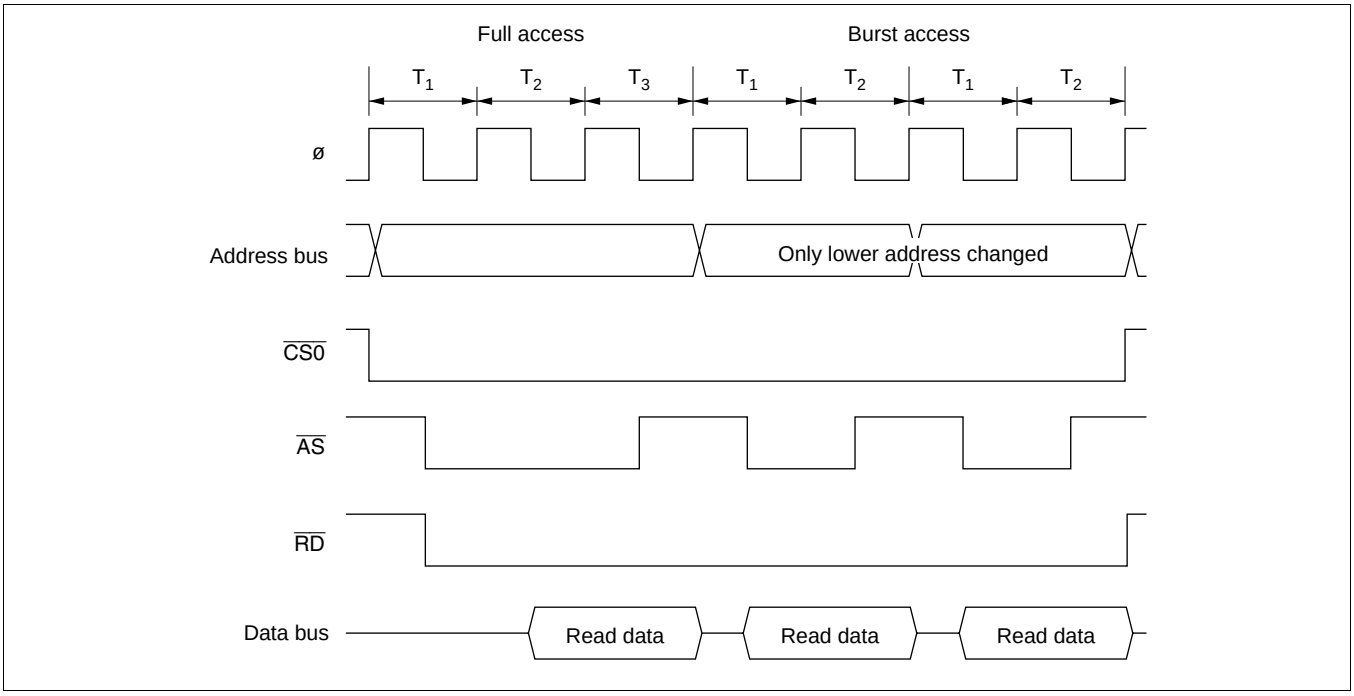

Figure 6-30 (a) Example of Burst ROM Access Timing (When AST0 = BRSTS1 = 1)

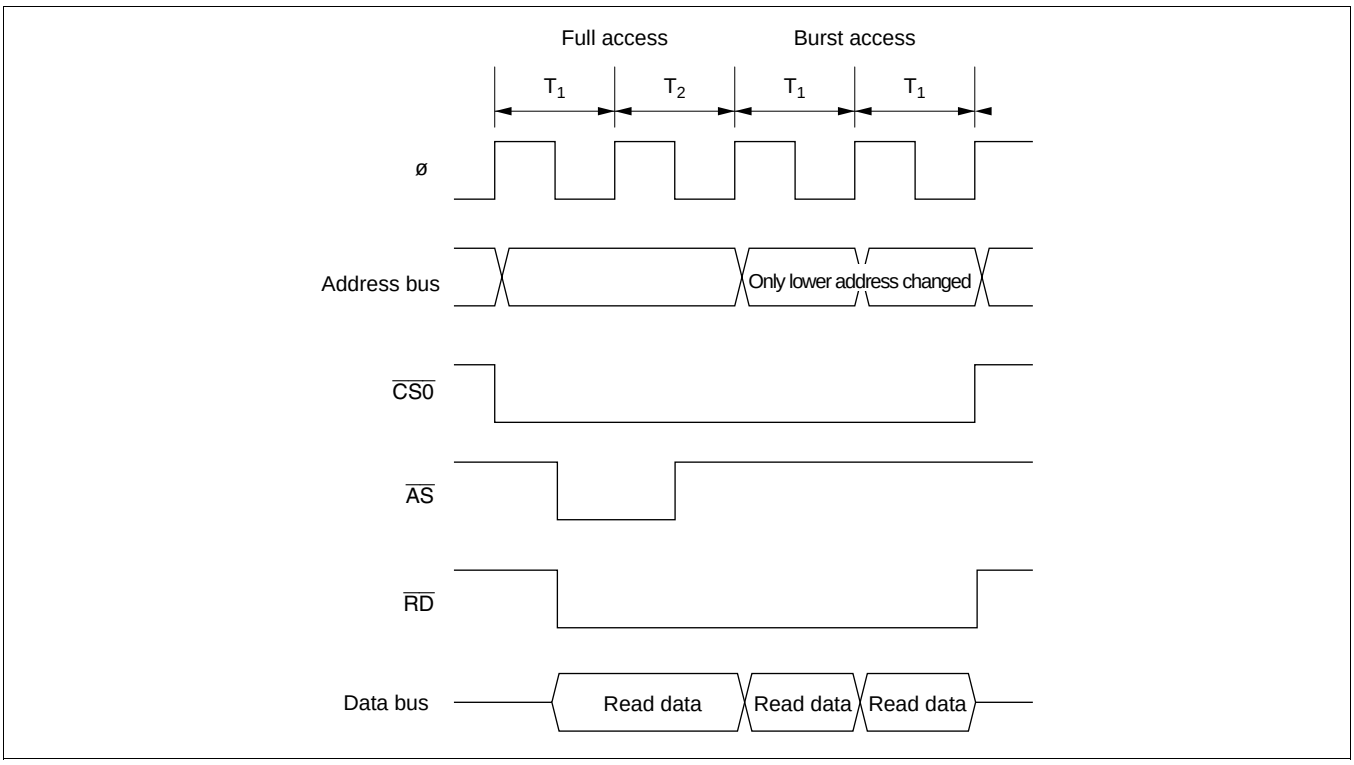

Figure 6-30 (b) Example of Burst ROM Access Timing (When AST0 = BRSTS1 = 0)

6.7.3 Wait Control

As with the basic bus interface, either program wait insertion or pin wait insertion using the $\overline{\text{WAIT}}$ pin can be used in the initial cycle (full access) of the burst ROM interface. See section 6.4.5, Wait Control.

Wait states cannot be inserted in a burst cycle.

6.8 Idle Cycle

6.8.1 Operation

When the H8S/2357 Group accesses external space, it can insert a 1-state idle cycle (T_I) between bus cycles in the following two cases: (1) when read accesses between different areas occur consecutively, and (2) when a write cycle occurs immediately after a read cycle. By inserting an idle cycle it is possible, for example, to avoid data collisions between ROM, with a long output floating time, and high-speed memory, I/O interfaces, and so on.

(1) Consecutive Reads between Different Areas

If consecutive reads between different areas occur while the ICIS1 bit in BCRH is set to 1, an idle cycle is inserted at the start of the second read cycle. This is enabled in advanced mode.

Figure 6-31 shows an example of the operation in this case. In this example, bus cycle A is a read cycle from ROM with a long output floating time, and bus cycle B is a read cycle from SRAM, each being located in a different area. In (a), an idle cycle is not inserted, and a collision occurs in cycle B between the read data from ROM and that from SRAM. In (b), an idle cycle is inserted, and a data collision is prevented.

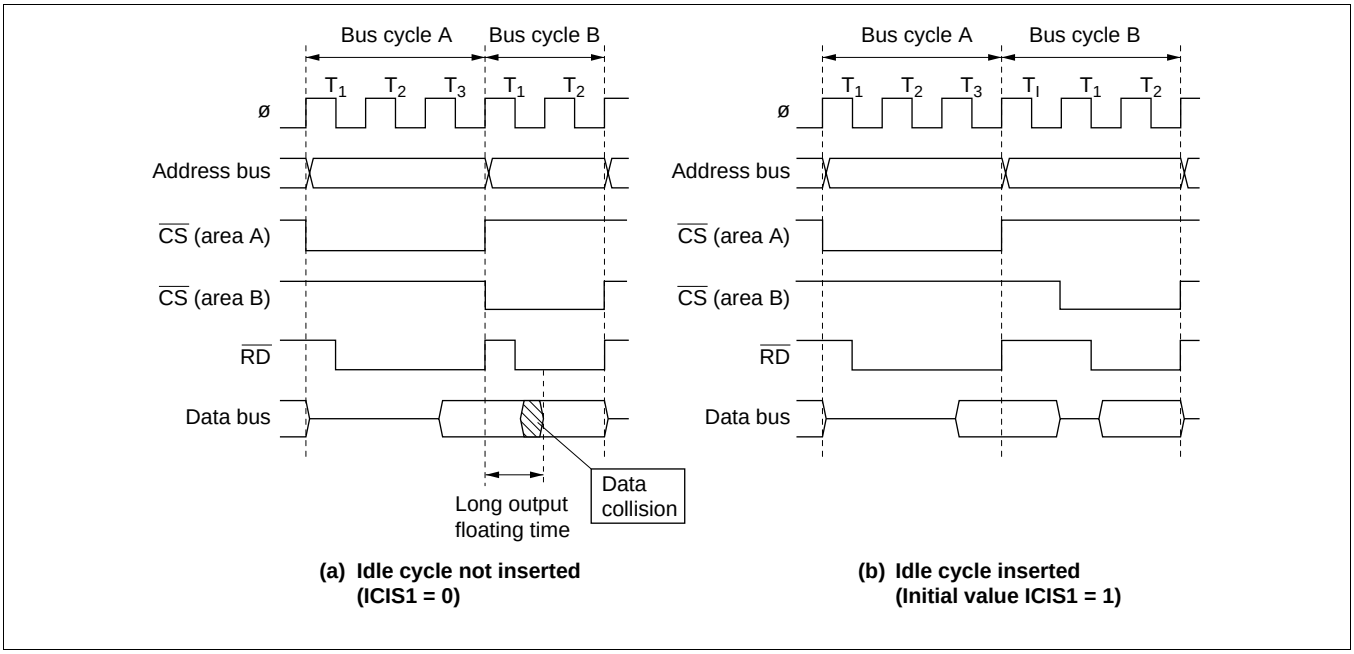

Figure 6-31 Example of Idle Cycle Operation (1)

(2) Write after Read

If an external write occurs after an external read while the ICIS0 bit in BCRH is set to 1, an idle cycle is inserted at the start of the write cycle.

Figure 6-32 shows an example of the operation in this case. In this example, bus cycle A is a read cycle from ROM with a long output floating time, and bus cycle B is a CPU write cycle. In (a), an idle cycle is not inserted, and a collision occurs in cycle B between the read data from ROM and the CPU write data. In (b), an idle cycle is inserted, and a data collision is prevented.

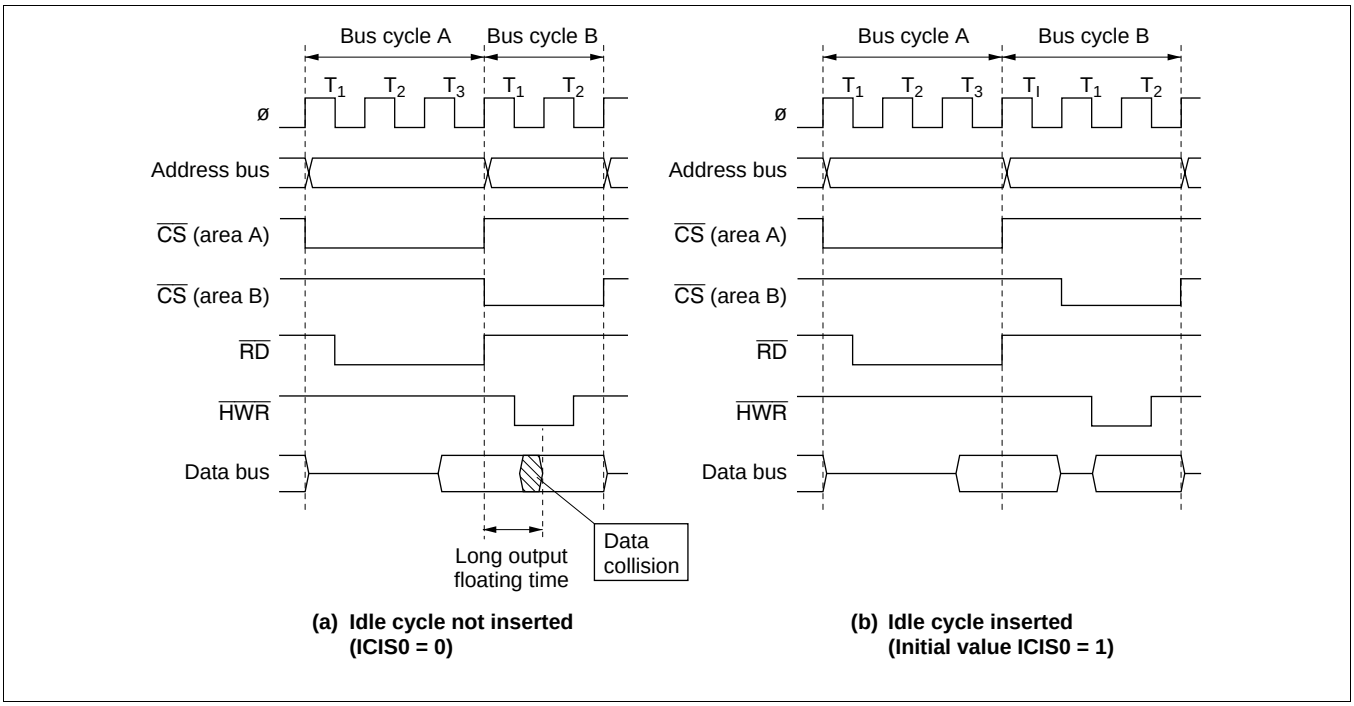

Figure 6-32 Example of Idle Cycle Operation (2)

(3) Relationship between Chip Select ($\overline{CS}$) Signal and Read ($\overline{RD}$) Signal

Depending on the system's load conditions, the $\overline{RD}$ signal may lag behind the $\overline{CS}$ signal. An example is shown in figure 6-33.

In this case, with the setting for no idle cycle insertion (a), there may be a period of overlap between the bus cycle A $\overline{RD}$ signal and the bus cycle B $\overline{CS}$ signal.

Setting idle cycle insertion, as in (b), however, will prevent any overlap between the $\overline{RD}$ and $\overline{CS}$ signals.

In the initial state after reset release, idle cycle insertion (b) is set.

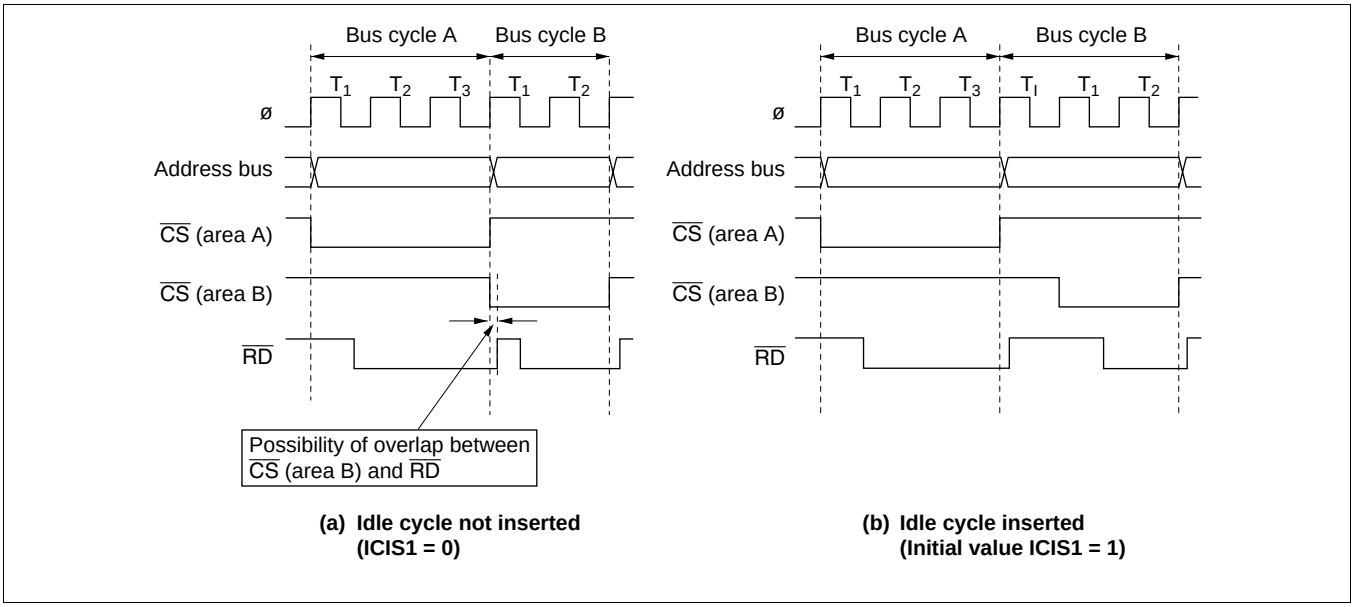

Figure 6-33 Relationship between Chip Select ($\overline{CS}$) and Read ($\overline{RD}$)

6.8.2 Usage Notes

When DRAM space is accessed, the ICIS0 and ICIS1 bit settings are disabled. In the case of consecutive reads between different areas, for example, if the second access is a DRAM access, only a T_p cycle is inserted, and a T_I cycle is not. The timing in this case is shown in figure 6-34.

However, in burst access in RAS down mode these settings are enabled, and an idle cycle is inserted. The timing in this case is shown in figures 6-35 (a) and (b).

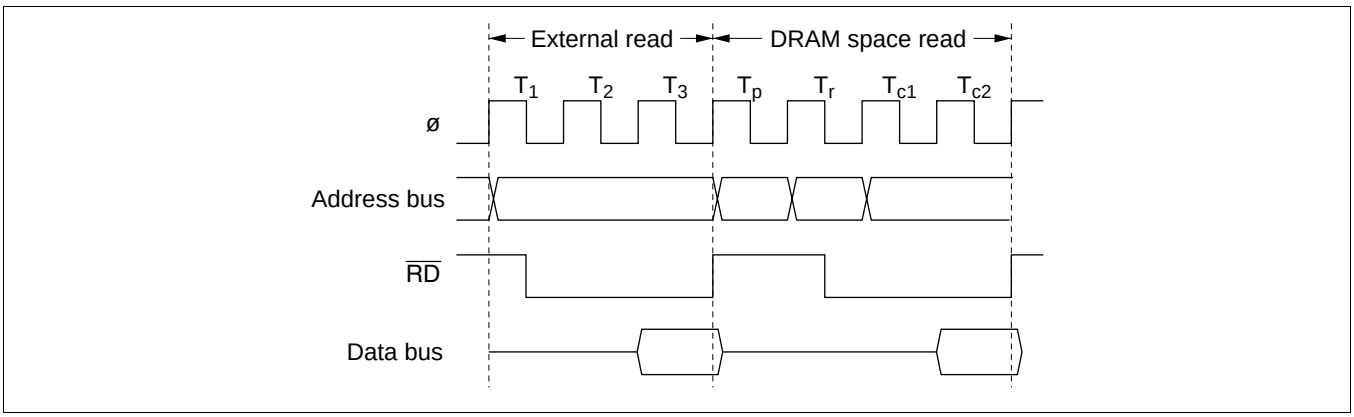

Figure 6-34 Example of DRAM Access after External Read

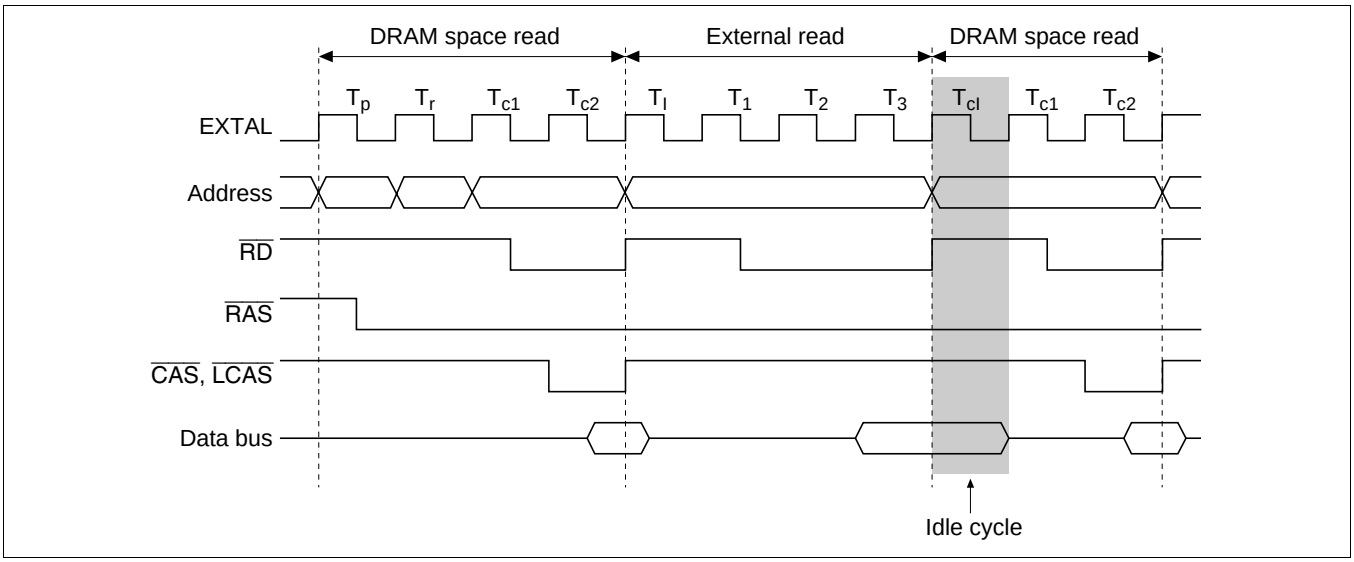

Figure 6-35 (a) Example of Idle Cycle Operation in RAS Down Mode (ICIS1 = 1)

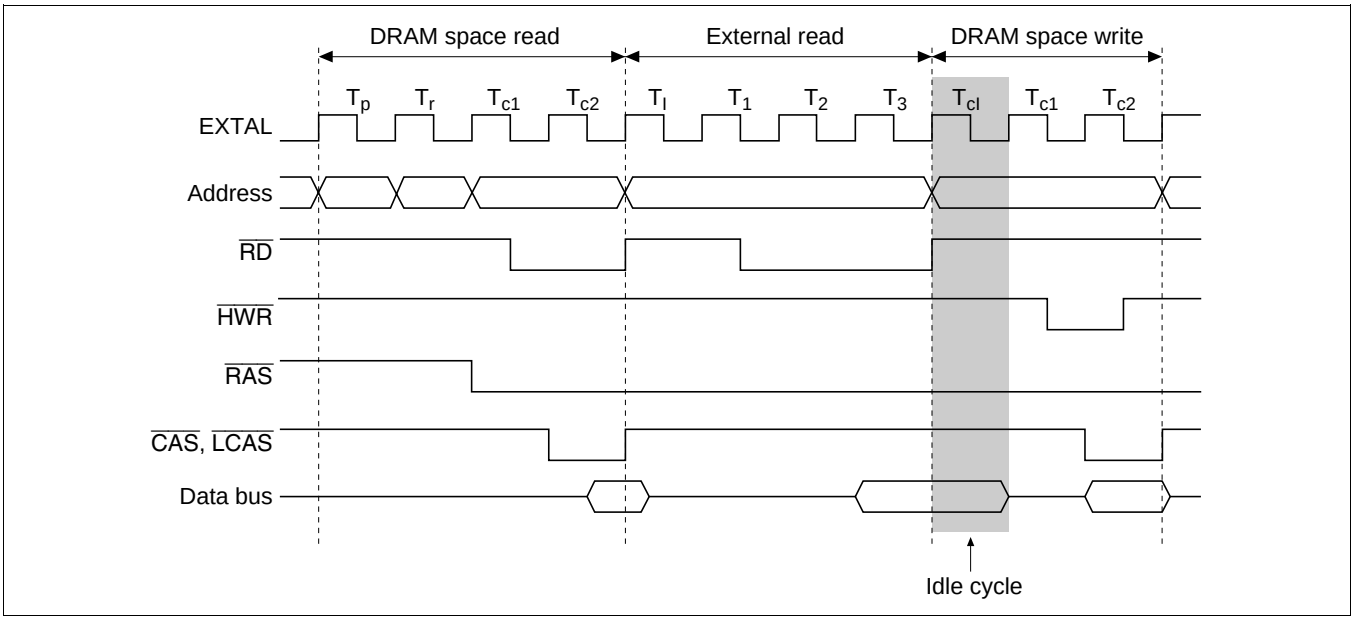

Figure 6-35 (b) Example of Idle Cycle Operation in RAS Down Mode (ICIS0 = 1)

6.8.3 Pin States in Idle Cycle

Table 6-8 shows pin states in an idle cycle.

Table 6-8 Pin States in Idle Cycle

Pins	Pin State
A_{23} to A_0	Contents of next bus cycle
D_{15} to D_0	High impedance
$\overline{CSn}$*2	High*1
$\overline{CAS}$	High
$\overline{AS}$	High
$\overline{RD}$	High
$\overline{HWR}$	High
$\overline{LWR}$	High
$\overline{DACKm}$*3	High

Notes: 1. Remains low in DRAM space RAS down mode or a refresh cycle.
2. n = 0 to 7
3. m = 0, 1

6.9 Write Data Buffer Function

The H8S/2357 Group has a write data buffer function in the external data bus. Using the write data buffer function enables external writes and DMA single address mode transfers to be executed in parallel with internal accesses. The write data buffer function is made available by setting the WDBE bit in BCRL to 1.

Figure 6-36 shows an example of the timing when the write data buffer function is used. When this function is used, if an external write or DMA single address mode transfer continues for 2 states or longer, and there is an internal access next, only an external write is executed in the first state, but from the next state onward an internal access (on-chip memory or internal I/O register read/write) is executed in parallel with the external write rather than waiting until it ends.

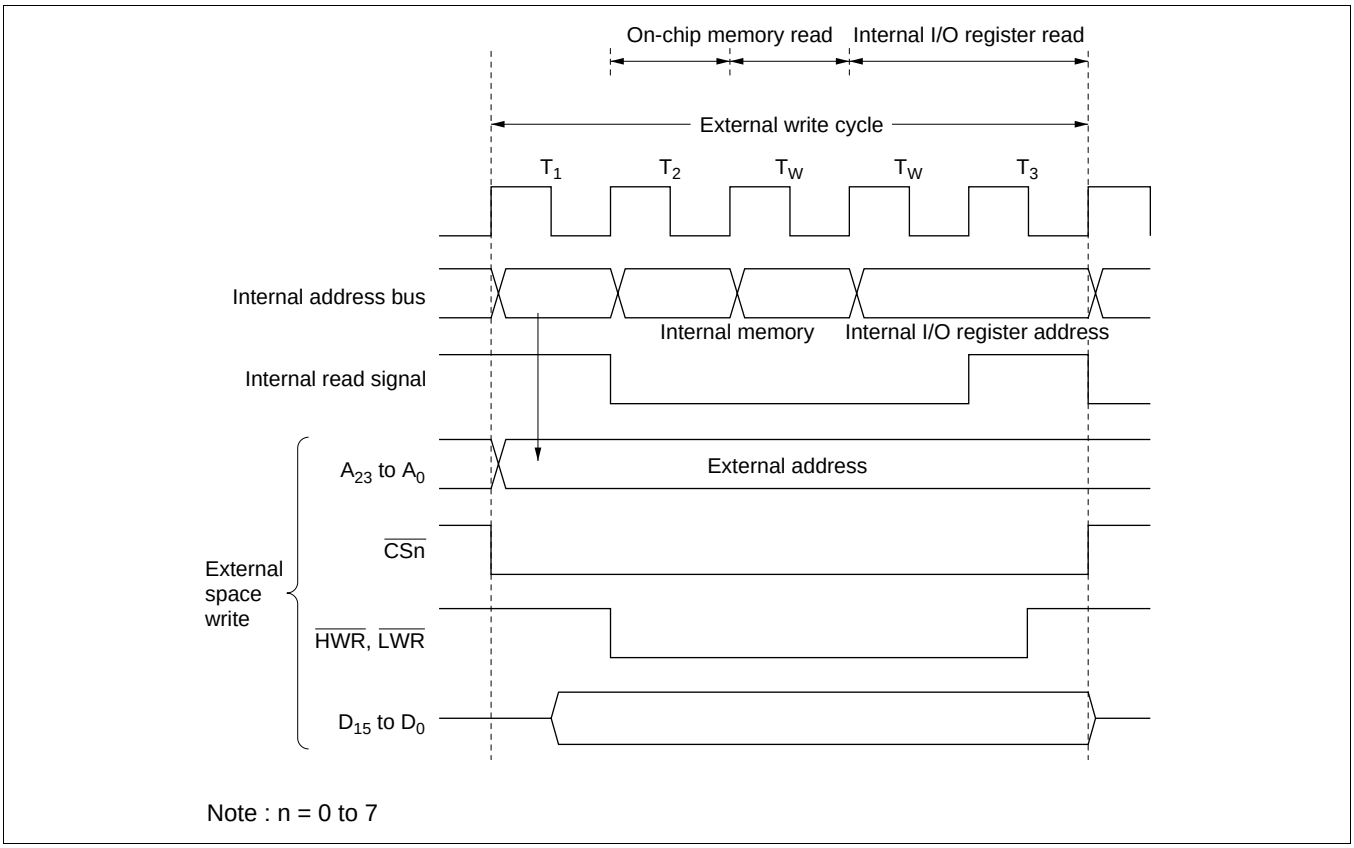

Figure 6-36 Example of Timing when Write Data Buffer Function is Used

6.10 Bus Release

6.10.1 Overview

The H8S/2357 Group can release the external bus in response to a bus request from an external device. In the external bus released state, the internal bus master continues to operate as long as there is no external access.

If an internal bus master wants to make an external access in the external bus released state, or if a refresh request is generated, it can issue a bus request off-chip.

6.10.2 Operation

In external expansion mode, the bus can be released to an external device by setting the BRLE bit in BCRL to 1. Driving the $\overline{\text{BREQ}}$ pin low issues an external bus request to the H8S/2357 Group. When the $\overline{\text{BREQ}}$ pin is sampled, at the prescribed timing the $\overline{\text{BACK}}$ pin is driven low, and the address bus, data bus, and bus control signals are placed in the high-impedance state, establishing the external bus-released state.

In the external bus released state, an internal bus master can perform accesses using the internal bus. When an internal bus master wants to make an external access, it temporarily defers activation of the bus cycle, and waits for the bus request from the external bus master to be dropped. Even if a refresh request is generated in the external bus released state, refresh control is deferred until the external bus master drops the bus request.

If the BREQOE bit in BCRL is set to 1, when an internal bus master wants to make an external access in the external bus released state, or when a refresh request is generated, the $\overline{\text{BREQO}}$ pin is driven low and a request can be made off-chip to drop the bus request.

When the $\overline{\text{BREQ}}$ pin is driven high, the $\overline{\text{BACK}}$ pin is driven high at the prescribed timing and the external bus released state is terminated.

If an external bus release request and external access occur simultaneously, the order of priority is as follows:

(High) External bus release > Internal bus master external access (Low)

If a refresh request and external bus release request occur simultaneously, the order of priority is as follows:

(High) Refresh > External bus release (Low)

As a refresh and an external access by an internal bus master can be executed simultaneously, there is no relative order of priority for these two operations.

6.10.3 Pin States in External Bus Released State

Table 6-9 shows pin states in the external bus released state.

Table 6-9 Pin States in Bus Released State

Pins	Pin State
A_{23} to A_0	High impedance
D_{15} to D_0	High impedance
$\overline{CSn}$*1	High impedance
$\overline{CAS}$	High impedance
$\overline{AS}$	High impedance
$\overline{RD}$	High impedance
$\overline{HWR}$	High impedance
$\overline{LWR}$	High impedance
$\overline{DACKm}$*2	High

Notes : 1. n = 0 to 7
2. m = 0, 1

6.10.4 Transition Timing

Figure 6-37 shows the timing for transition to the bus-released state.

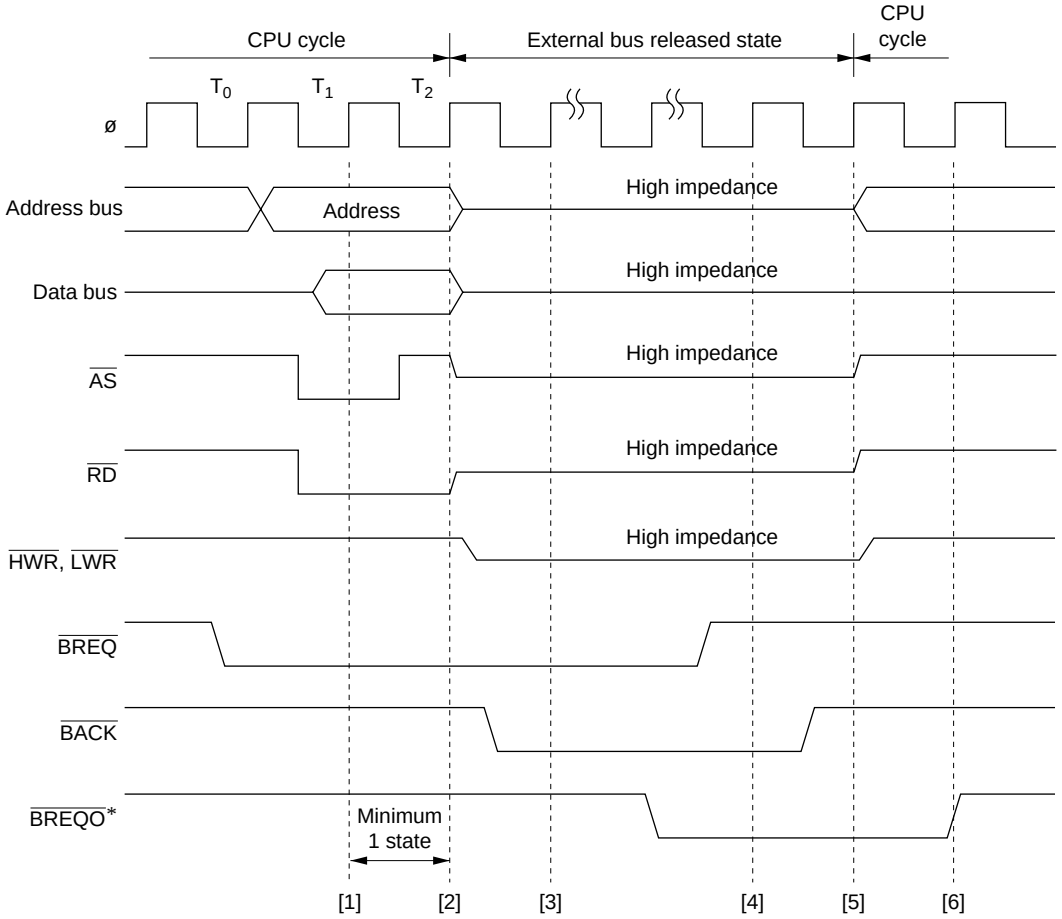

[1] Low level of $\overline{\text{BREQ}}$ pin is sampled at rise of T_2 state.

[2] $\overline{\text{BACK}}$ pin is driven low at end of CPU read cycle, releasing bus to external bus master.

[3] $\overline{\text{BREQ}}$ pin state is still sampled in external bus released state.

[4] High level of $\overline{\text{BREQ}}$ pin is sampled.

[5] $\overline{\text{BACK}}$ pin is driven high, ending bus release cycle.

[6] $\overline{\text{BREQO}}$ signal goes high 1.5 clocks after $\overline{\text{BACK}}$ signal goes high.

Note: * Output only when BREQOE is set to 1.

Figure 6-37 Bus-Released State Transition Timing

6.10.5 Usage Note

When MSTPCR is set to H'FFFF or H'EFFF and a transition is made to sleep mode, the external bus release function halts. Therefore, MSTPCR should not be set to H'FFFF or H'EFFF if the external bus release function is to be used in sleep mode.

6.11 Bus Arbitration

6.11.1 Overview

The H8S/2357 Group has a bus arbiter that arbitrates bus master operations.

There are three bus masters, the CPU, DTC, and DMAC, which perform read/write operations when they have possession of the bus. Each bus master requests the bus by means of a bus request signal. The bus arbiter determines priorities at the prescribed timing, and permits use of the bus by means of a bus request acknowledge signal. The selected bus master then takes possession of the bus and begins its operation.

6.11.2 Operation

The bus arbiter detects the bus masters' bus request signals, and if the bus is requested, sends a bus request acknowledge signal to the bus master making the request. If there are bus requests from more than one bus master, the bus request acknowledge signal is sent to the one with the highest priority. When a bus master receives the bus request acknowledge signal, it takes possession of the bus until that signal is canceled.

The order of priority of the bus masters is as follows:

(High) DMAC > DTC > CPU (Low)

An internal bus access by an internal bus master, external bus release, and refreshing, can be executed in parallel.

In the event of simultaneous external bus release request, refresh request, and internal bus master external access request generation, the order of priority is as follows:

(High) Refresh > External bus release (Low)

(High) External bus release > Internal bus master external access (Low)

As a refresh and an external access by an internal bus master can be executed simultaneously, there is no relative order of priority for these two operations.

6.11.3 Bus Transfer Timing

Even if a bus request is received from a bus master with a higher priority than that of the bus master that has acquired the bus and is currently operating, the bus is not necessarily transferred immediately. There are specific times at which each bus master can relinquish the bus.

CPU: The CPU is the lowest-priority bus master, and if a bus request is received from the DTC or DMAC, the bus arbiter transfers the bus to the bus master that issued the request. The timing for transfer of the bus is as follows:

- The bus is transferred at a break between bus cycles. However, if a bus cycle is executed in discrete operations, as in the case of a longword-size access, the bus is not transferred between the operations. See Appendix A.5, Bus States during Instruction Execution, for timings at which the bus is not transferred.
- If the CPU is in sleep mode, it transfers the bus immediately.

DTC: The DTC sends the bus arbiter a request for the bus when an activation request is generated.

The DTC can release the bus after a vector read, a register information read (3 states), a single data transfer, or a register information write (3 states). It does not release the bus during a register information read (3 states), a single data transfer, or a register information write (3 states).

DMAC: The DMAC sends the bus arbiter a request for the bus when an activation request is generated.

In the case of an external request in short address mode or normal mode, and in cycle steal mode, the DMAC releases the bus after a single transfer.

In block transfer mode, it releases the bus after transfer of one block, and in burst mode, after completion of a transfer.

6.11.4 External Bus Release Usage Note

External bus release can be performed on completion of an external bus cycle. The $\overline{RD}$ signal, DRAM interface $\overline{RAS}$ and $\overline{CAS}$ signals remain low until the end of the external bus cycle. Therefore, when external bus release is performed, the $\overline{RD}$, $\overline{RAS}$, and $\overline{CAS}$ signals may change from the low level to the high-impedance state.

6.12 Resets and the Bus Controller

In a power-on reset, the H8S/2357 Group, including the bus controller, enters the reset state at that point, and an executing bus cycle is discontinued.

In a manual reset*, the bus controller's registers and internal state are maintained, and an executing external bus cycle is completed. In this case, $\overline{\text{WAIT}}$ input is ignored. Also, since the DMAC is initialized by a manual reset*, $\overline{\text{DACK}}$ and $\overline{\text{TEND}}$ output is disabled and these pins become I/O ports controlled by DDR and DR.

Note: * Manual reset is only supported in the H8S/2357 ZTAT.

Section 7 DMA Controller

7.1 Overview

The H8S/2357 Group has a on-chip DMA controller (DMAC) which can carry out data transfer on up to 4 channels.

7.1.1 Features

The features of the DMAC are listed below.

- Choice of short address mode or full address mode
  Short address mode
  — Maximum of 4 channels can be used
  — Choice of dual address mode or single address mode
  — In dual address mode, one of the two addresses, transfer source and transfer destination, is specified as 24 bits and the other as 16 bits
  — In single address mode, transfer source or transfer destination address only is specified as 24 bits
  — In single address mode, transfer can be performed in one bus cycle
  — Choice of sequential mode, idle mode, or repeat mode for dual address mode and single address mode
  Full address mode
  — Maximum of 2 channels can be used
  — Transfer source and transfer destination address specified as 24 bits
  — Choice of normal mode or block transfer mode
- 16-Mbyte address space can be specified directly
- Byte or word can be set as the transfer unit
- Activation sources: internal interrupt, external request, auto-request (depending on transfer mode)
  — Six 16-bit timer-pulse unit (TPU) compare match/input capture interrupts
  — Serial communication interface (SCI0, SCI1) transmission data empty interrupt, reception data full interrupt
  — A/D converter conversion end interrupt
  — External request
  — Auto-request
- Module stop mode can be set
  — The initial setting enables DMAC registers to be accessed. DMAC operation is halted by setting module stop mode

7.1.2 Block Diagram

A block diagram of the DMAC is shown in figure 7-1.

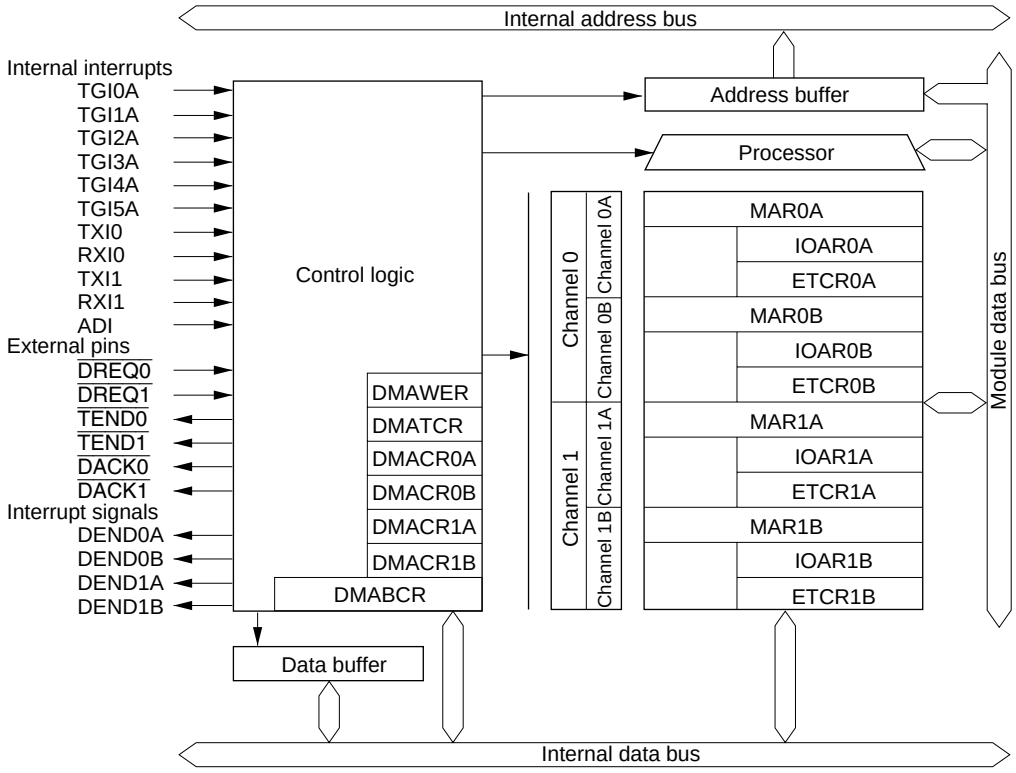

Legend:

DMAWER: DMA write enable register
DMATCR: DMA terminal control register
DMABCR: DMA band control register (for all channels)
DMACR: DMA control register
MAR: Memory address register
IOAR: I/O address register
ETCR: Executive transfer counter register

Figure 7-1 Block Diagram of DMAC

7.1.3 Overview of Functions

Tables 7-1 (1) and (2) summarize DMAC functions in short address mode and full address mode, respectively.

Table 7-1 (1) Overview of DMAC Functions (Short Address Mode)

		Address Register Bit Length	
Transfer Mode	**Transfer Source**	**Source**	**Destination**
Dual address mode • Sequential mode — 1-byte or 1-word transfer executed for one transfer request — Memory address incremented/decremented by 1 or 2 — 1 to 65,536 transfers • Idle mode — 1-byte or 1-word transfer executed for one transfer request — Memory address fixed — 1 to 65,536 transfers • Repeat mode — 1-byte or 1-word transfer executed for one transfer request — Memory address incremented/ decremented by 1 or 2 — After specified number of transfers (1 to 256), initial state is restored and operation continues	• TPU channel 0 to 5 compare match/input capture A interrupts • SCI transmission data empty interrupt • SCI reception data full interrupt • A/D converter conversion end interrupt • External request	24/16	16/24
Single address mode • 1-byte or 1-word transfer executed for one transfer request • Transfer in 1 bus cycle using $\overline{\text{DACK}}$ pin in place of address specifying I/O • Specifiable for sequential, idle, and repeat modes	• External request	24/$\overline{\text{DACK}}$	$\overline{\text{DACK}}$/24

Table 7-1 (2) Overview of DMAC Functions (Full Address Mode)

Transfer Mode	Transfer Source	Address Register Bit Length	
		Source	Destination
• Normal mode Auto-request — Transfer request retained internally — Transfers continue for the specified number of times (1 to 65,536) — Choice of burst or cycle steal transfer	• Auto-request	24	24
External request — 1-byte or 1-word transfer executed for one transfer request — 1 to 65,536 transfers	• External request		
• Block transfer mode — Specified block size transfer executed for one transfer request — 1 to 65,536 transfers — Either source or destination specifiable as block area — Block size: 1 to 256 bytes or words	• TPU channel 0 to 5 compare match/input capture A interrupts • SCI transmission data empty interrupt • SCI reception data full interrupt • External request • A/D converter conversion end interrupt	24	24

7.1.4 Pin Configuration

Table 7-2 summarizes the DMAC pins.

In short address mode, external request transfer, single address transfer, and transfer end output are not performed for channel A.

The DMA transfer acknowledge function is used in channel B single address mode in short address mode.

When the $\overline{\text{DREQ}}$ pin is used, do not designate the corresponding port for output.

With regard to the $\overline{\text{DACK}}$ pins, setting single address transfer automatically sets the corresponding port to output, functioning as a $\overline{\text{DACK}}$ pin.

With regard to the $\overline{\text{TEND}}$ pins, whether or not the corresponding port is used as a $\overline{\text{TEND}}$ pin can be specified by means of a register setting.

Table 7-2 DMAC Pins

Channel	Pin Name	Symbol	I/O	Function
0	DMA request 0	$\overline{\text{DREQ0}}$	Input	DMAC channel 0 external request
	DMA transfer acknowledge 0	$\overline{\text{DACK0}}$	Output	DMAC channel 0 single address transfer acknowledge
	DMA transfer end 0	$\overline{\text{TEND0}}$	Output	DMAC channel 0 transfer end
1	DMA request 1	$\overline{\text{DREQ1}}$	Input	DMAC channel 1 external request
	DMA transfer acknowledge 1	$\overline{\text{DACK1}}$	Output	DMAC channel 1 single address transfer acknowledge
	DMA transfer end 1	$\overline{\text{TEND1}}$	Output	DMAC channel 1 transfer end

7.1.5 Register Configuration

Table 7-3 summarizes the DMAC registers.

Table 7-3 DMAC Registers

Channel	Name	Abbreviation	R/W	Initial Value	Address*	Bus Width
0	Memory address register 0A	MAR0A	R/W	Undefined	H'FEE0	16 bits
	I/O address register 0A	IOAR0A	R/W	Undefined	H'FEE4	16 bits
	Transfer count register 0A	ETCR0A	R/W	Undefined	H'FEE6	16 bits
	Memory address register 0B	MAR0B	R/W	Undefined	H'FEE8	16 bits
	I/O address register 0B	IOAR0B	R/W	Undefined	H'FEEC	16 bits
	Transfer count register 0B	ETCR0B	R/W	Undefined	H'FEEE	16 bits
1	Memory address register 1A	MAR1A	R/W	Undefined	H'FEF0	16 bits
	I/O address register 1A	IOAR1A	R/W	Undefined	H'FEF4	16 bits
	Transfer count register 1A	ETCR1A	R/W	Undefined	H'FEF6	16 bits
	Memory address register 1B	MAR1B	R/W	Undefined	H'FEF8	16 bits
	I/O address register 1B	IOAR1B	R/W	Undefined	H'FEFC	16 bits
	Transfer count register 1B	ETCR1B	R/W	Undefined	H'FEFE	16 bits
0, 1	DMA write enable register	DMAWER	R/W	H'00	H'FF00	8 bits
	DMA terminal control register	DMATCR	R/W	H'00	H'FF01	8 bits
	DMA control register 0A	DMACR0A	R/W	H'00	H'FF02	16 bits
	DMA control register 0B	DMACR0B	R/W	H'00	H'FF03	16 bits
	DMA control register 1A	DMACR1A	R/W	H'00	H'FF04	16 bits
	DMA control register 1B	DMACR1B	R/W	H'00	H'FF05	16 bits
	DMA band control register	DMABCR	R/W	H'0000	H'FF06	16 bits
	Module stop control register	MSTPCR	R/W	H'3FFF	H'FF3C	8 bits

Note: * Lower 16 bits of the address.

7.2 Register Descriptions (1) (Short Address Mode)

Short address mode transfer can be performed for channels A and B independently.

Short address mode transfer is specified for each channel by clearing the FAE bit in DMABCR to 0, as shown in table 7-4. Short address mode or full address mode can be selected for channels 1 and 0 independently by means of bits FAE1 and FAE0.

Table 7-4 Short Address Mode and Full Address Mode (For 1 Channel: Example of Channel 0)

FAE0	Description
0	Short address mode specified (channels A and B operate independently)

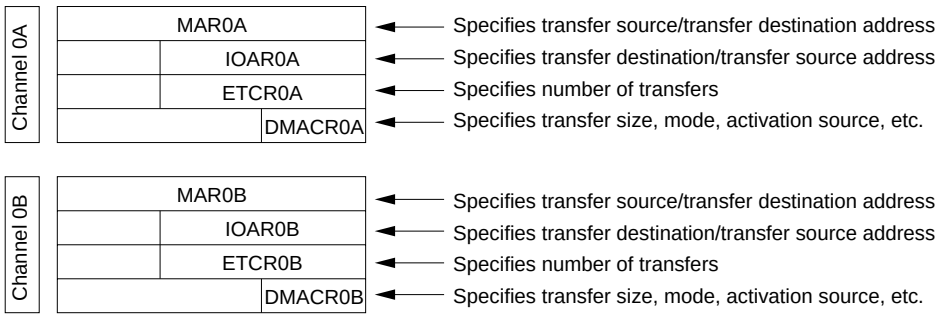

1	Full address mode specified (channels A and B operate in combination)

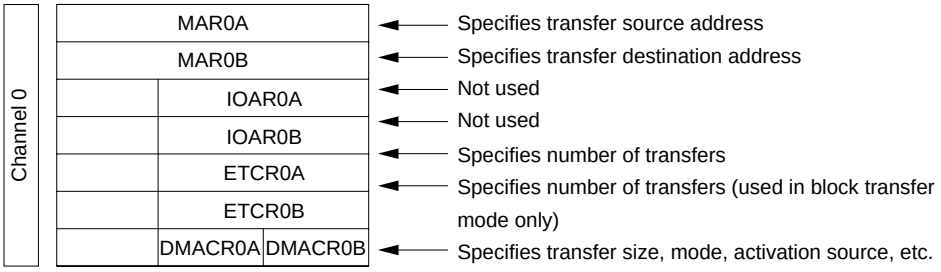

7.2.1 Memory Address Registers (MAR)

Bit	:	31	30	29	28	27	26	25	24	23	22	21	20	19	18	17	16
MAR	:	—	—	—	—	—	—	—	—								
Initial value	:	0	0	0	0	0	0	0	0	*	*	*	*	*	*	*	*
R/W	:	—	—	—	—	—	—	—	—	R/W	R/W	R/W	R/W	R/W	R/W	R/W	R/W

Bit	:	15	14	13	12	11	10	9	8	7	6	5	4	3	2	1	0
MAR	:																
Initial value	:	*	*	*	*	*	*	*	*	*	*	*	*	*	*	*	*
R/W	:	R/W	R/W	R/W	R/W	R/W	R/W	R/W	R/W	R/W	R/W	R/W	R/W	R/W	R/W	R/W	R/W

*: Undefined

MAR is a 32-bit readable/writable register that specifies the transfer source address or destination address.

The upper 8 bits of MAR are reserved: they are always read as 0, and cannot be modified.

Whether MAR functions as the source address register or as the destination address register can be selected by means of the DTDIR bit in DMACR.

MAR is incremented or decremented each time a byte or word transfer is executed, so that the address specified by MAR is constantly updated. For details, see section 7.2.4, DMA Control Register (DMACR).

MAR is not initialized by a reset or in standby mode.

7.2.2 I/O Address Register (IOAR)

Bit	:	15	14	13	12	11	10	9	8	7	6	5	4	3	2	1	0
IOAR	:																
Initial value	:	*	*	*	*	*	*	*	*	*	*	*	*	*	*	*	*
R/W	:	R/W	R/W	R/W	R/W	R/W	R/W	R/W	R/W	R/W	R/W	R/W	R/W	R/W	R/W	R/W	R/W

*: Undefined

IOAR is a 16-bit readable/writable register that specifies the lower 16 bits of the transfer source address or destination address. The upper 8 bits of the transfer address are automatically set to H'FF.

Whether IOAR functions as the source address register or as the destination address register can be selected by means of the DTDIR bit in DMACR.

IOAR is invalid in single address mode.

IOAR is not incremented or decremented each time a transfer is executed, so that the address specified by IOAR is fixed.

IOAR is not initialized by a reset or in standby mode.

7.2.3 Execute Transfer Count Register (ETCR)

ETCR is a 16-bit readable/writable register that specifies the number of transfers. The setting of this register is different for sequential mode and idle mode on the one hand, and for repeat mode on the other.

(1) Sequential Mode and Idle Mode

Transfer Counter

Bit	:	15	14	13	12	11	10	9	8	7	6	5	4	3	2	1	0
ETCR	:																
Initial value	:	*	*	*	*	*	*	*	*	*	*	*	*	*	*	*	*
R/W	:	R/W	R/W	R/W	R/W	R/W	R/W	R/W	R/W	R/W	R/W	R/W	R/W	R/W	R/W	R/W	R/W

*: Undefined

In sequential mode and idle mode, ETCR functions as a 16-bit transfer counter (with a count range of 1 to 65,536). ETCR is decremented by 1 each time a transfer is performed, and when the count reaches H'0000, the DTE bit in DMABCR is cleared, and transfer ends.

(2) Repeat Mode

Transfer Number Storage

Bit	:	15	14	13	12	11	10	9	8
ETCRH	:								
Initial value	:	*	*	*	*	*	*	*	*
R/W	:	R/W	R/W	R/W	R/W	R/W	R/W	R/W	R/W

Transfer Counter

Bit	:	7	6	5	4	3	2	1	0
ETCRL	:								
Initial value	:	*	*	*	*	*	*	*	*
R/W	:	R/W	R/W	R/W	R/W	R/W	R/W	R/W	R/W

*: Undefined

In repeat mode, ETCR functions as transfer counter ETCRL (with a count range of 1 to 256) and transfer number storage register ETCRH. ETCRL is decremented by 1 each time a transfer is performed, and when the count reaches H'00, ETCRL is loaded with the value in ETCRH. At this point, MAR is automatically restored to the value it had when the count was started. The DTE bit in DMABCR is not cleared, and so transfers can be performed repeatedly until the DTE bit is cleared by the user.

ETCR is not initialized by a reset or in standby mode.

7.2.4 DMA Control Register (DMACR)

Bit	:	7	6	5	4	3	2	1	0
DMACR	:	DTSZ	DTID5	RPE	DTDIR	DTF3	DTF2	DTF1	DTF0
Initial value	:	0	0	0	0	0	0	0	0
R/W	:	R/W	R/W	R/W	R/W	R/W	R/W	R/W	R/W

DMACR is an 8-bit readable/writable register that controls the operation of each DMAC channel.

DMACR is initialized to H'00 by a reset, and in hardware standby mode.

Bit 7—Data Transfer Size (DTSZ): Selects the size of data to be transferred at one time.

Bit 7 DTSZ	Description	
0	Byte-size transfer	(Initial value)
1	Word-size transfer	

Bit 6—Data Transfer Increment/Decrement (DTID): Selects incrementing or decrementing of MAR every data transfer in sequential mode or repeat mode.

In idle mode, MAR is neither incremented nor decremented.

Bit 6 DTID	Description	
0	MAR is incremented after a data transfer • When DTSZ = 0, MAR is incremented by 1 after a transfer • When DTSZ = 1, MAR is incremented by 2 after a transfer	(Initial value)
1	MAR is decremented after a data transfer • When DTSZ = 0, MAR is decremented by 1 after a transfer • When DTSZ = 1, MAR is decremented by 2 after a transfer	

Bit 5—Repeat Enable (RPE): Used in combination with the DTIE bit in DMABCR to select the mode (sequential, idle, or repeat) in which transfer is to be performed.

Bit 5 RPE	DMABCR DTIE	Description	
0	0	Transfer in sequential mode (no transfer end interrupt)	(Initial value)
	1	Transfer in sequential mode (with transfer end interrupt)	
1	0	Transfer in repeat mode (no transfer end interrupt)	
	1	Transfer in idle mode (with transfer end interrupt)	

For details of operation in sequential, idle, and repeat mode, see section 7.5.2, Sequential Mode, section 7.5.3, Idle Mode, and section 7.5.4, Repeat Mode.

Bit 4—Data Transfer Direction (DTDIR): Used in combination with the SAE bit in DMABCR to specify the data transfer direction (source or destination). The function of this bit is therefore different in dual address mode and single address mode.

DMABCR SAE	Bit 4 DTDIR	Description
0	0	Transfer with MAR as source address and IOAR as destination address (Initial value)
	1	Transfer with IOAR as source address and MAR as destination address
1	0	Transfer with MAR as source address and $\overline{\text{DACK}}$ pin as write strobe
	1	Transfer with $\overline{\text{DACK}}$ pin as read strobe and MAR as destination address

Bits 3 to 0—Data Transfer Factor (DTF3 to DTF0): These bits select the data transfer factor (activation source). There are some differences in activation sources for channel A and for channel B.

Channel A

Bit 3 DTF3	Bit 2 DTF2	Bit 1 DTF1	Bit 0 DTF0	Description
0	0	0	0	— (Initial value)
			1	Activated by A/D converter conversion end interrupt
		1	0	—
			1	—
	1	0	0	Activated by SCI channel 0 transmission data empty interrupt
			1	Activated by SCI channel 0 reception data full interrupt
		1	0	Activated by SCI channel 1 transmission data empty interrupt
			1	Activated by SCI channel 1 reception data full interrupt
1	0	0	0	Activated by TPU channel 0 compare match/input capture A interrupt
			1	Activated by TPU channel 1 compare match/input capture A interrupt
		1	0	Activated by TPU channel 2 compare match/input capture A interrupt
			1	Activated by TPU channel 3 compare match/input capture A interrupt
	1	0	0	Activated by TPU channel 4 compare match/input capture A interrupt
			1	Activated by TPU channel 5 compare match/input capture A interrupt
		1	0	—
			1	—

Channel B

Bit 3 DTF3	Bit 2 DTF2	Bit 1 DTF1	Bit 0 DTF0	Description
0	0	0	0	— (Initial value)
			1	Activated by A/D converter conversion end interrupt
		1	0	Activated by $\overline{\text{DREQ}}$ pin falling edge input*
			1	Activated by $\overline{\text{DREQ}}$ pin low-level input
	1	0	0	Activated by SCI channel 0 transmission data empty interrupt
			1	Activated by SCI channel 0 reception data full interrupt
		1	0	Activated by SCI channel 1 transmission data empty interrupt
			1	Activated by SCI channel 1 reception data full interrupt
1	0	0	0	Activated by TPU channel 0 compare match/input capture A interrupt
			1	Activated by TPU channel 1 compare match/input capture A interrupt
		1	0	Activated by TPU channel 2 compare match/input capture A interrupt
			1	Activated by TPU channel 3 compare match/input capture A interrupt
	1	0	0	Activated by TPU channel 4 compare match/input capture A interrupt
			1	Activated by TPU channel 5 compare match/input capture A interrupt
		1	0	—
			1	—

Note: * Detected as a low level in the first transfer after transfer is enabled.

The same factor can be selected for more than one channel. In this case, activation starts with the highest-priority channel according to the relative channel priorities. For relative channel priorities, see section 7.5.13, DMAC Multi-Channel Operation.

7.2.5 DMA Band Control Register (DMABCR)

Bit :	15	14	13	12	11	10	9	8
DMABCRH :	FAE1	FAE0	SAE1	SAE0	DTA1B	DTA1A	DTA0B	DTA0A
Initial value :	0	0	0	0	0	0	0	0
R/W :	R/W	R/W	R/W	R/W	R/W	R/W	R/W	R/W

Bit :	7	6	5	4	3	2	1	0
DMABCRL :	DTE1B	DTE1A	DTE0B	DTE0A	DTIE1B	DTIE1A	DTIE0B	DTIE0A
Initial value :	0	0	0	0	0	0	0	0
R/W :	R/W	R/W	R/W	R/W	R/W	R/W	R/W	R/W

DMABCR is a 16-bit readable/writable register that controls the operation of each DMAC channel.

DMABCR is initialized to H'0000 by a reset, and in hardware standby mode.

Bit 15—Full Address Enable 1 (FAE1): Specifies whether channel 1 is to be used in short address mode or full address mode.

Bit 15 FAE1	Description	
0	Short address mode	(Initial value)
1	Full address mode	

In short address mode, channels 1A and 1B are used as independent channels.

Bit 14—Full Address Enable 0 (FAE0): Specifies whether channel 0 is to be used in short address mode or full address mode.

Bit 14 FAE0	Description	
0	Short address mode	(Initial value)
1	Full address mode	

In short address mode, channels 0A and 0B are used as independent channels.

Bit 13—Single Address Enable 1 (SAE1): Specifies whether channel 1B is to be used for transfer in dual address mode or single address mode.

Bit 13 SAE1	Description	
0	Transfer in dual address mode	(Initial value)
1	Transfer in single address mode	

This bit is invalid in full address mode.

Bit 12—Single Address Enable 0 (SAE0): Specifies whether channel 0B is to be used for transfer in dual address mode or single address mode.

Bit 12 SAE0	Description
0	Transfer in dual address mode (Initial value)
1	Transfer in single address mode

This bit is invalid in full address mode.

Bits 11 to 8—Data Transfer Acknowledge (DTA): These bits enable or disable clearing, when DMA transfer is performed, of the internal interrupt source selected by the data transfer factor setting.

When DTE = 1 and DTA = 1, the internal interrupt source selected by the data transfer factor setting is cleared automatically by DMA transfer. When DTE = 1 and DTA = 1, the internal interrupt source selected by the data transfer factor setting does not issue an interrupt request to the CPU or DTC.

When DTE = 1 and DTA = 0, the internal interrupt source selected by the data transfer factor setting is not cleared when a transfer is performed, and can issue an interrupt request to the CPU or DTC in parallel. In this case, the interrupt source should be cleared by the CPU or DTC transfer.

When DTE = 0, the internal interrupt source selected by the data transfer factor setting issues an interrupt request to the CPU or DTC regardless of the DTA bit setting.

Bit 11—Data Transfer Acknowledge 1B (DTA1B): Enables or disables clearing, when DMA transfer is performed, of the internal interrupt source selected by the channel 1B data transfer factor setting.

Bit 11 DTA1B	Description
0	Clearing of selected internal interrupt source at time of DMA transfer is disabled (Initial value)
1	Clearing of selected internal interrupt source at time of DMA transfer is enabled

Bit 10—Data Transfer Acknowledge 1A (DTA1A): Enables or disables clearing, when DMA transfer is performed, of the internal interrupt source selected by the channel 1A data transfer factor setting.

Bit 10 DTA1A	Description
0	Clearing of selected internal interrupt source at time of DMA transfer is disabled (Initial value)
1	Clearing of selected internal interrupt source at time of DMA transfer is enabled

Bit 9—Data Transfer Acknowledge 0B (DTA0B): Enables or disables clearing, when DMA transfer is performed, of the internal interrupt source selected by the channel 0B data transfer factor setting.

Bit 9 DTA0B	Description
0	Clearing of selected internal interrupt source at time of DMA transfer is disabled (Initial value)
1	Clearing of selected internal interrupt source at time of DMA transfer is enabled

Bit 8—Data Transfer Acknowledge 0A (DTA0A): Enables or disables clearing, when DMA transfer is performed, of the internal interrupt source selected by the channel 0A data transfer factor setting.

Bit 8 DTA0A	Description
0	Clearing of selected internal interrupt source at time of DMA transfer is disabled (Initial value)
1	Clearing of selected internal interrupt source at time of DMA transfer is enabled

Bits 7 to 4—Data Transfer Enable (DTE): When DTE = 0, data transfer is disabled and the activation source selected by the data transfer factor setting is ignored. If the activation source is an internal interrupt, an interrupt request is issued to the CPU or DTC. If the DTIE bit is set to 1 when DTE = 0, the DMAC regards this as indicating the end of a transfer, and issues a transfer end interrupt request to the CPU or DTC.

The conditions for the DTE bit being cleared to 0 are as follows:

- When initialization is performed
- When the specified number of transfers have been completed in a transfer mode other than repeat mode
- When 0 is written to the DTE bit to forcibly abort the transfer, or for a similar reason

When DTE = 1, data transfer is enabled and the DMAC waits for a request by the activation source selected by the data transfer factor setting. When a request is issued by the activation source, DMA transfer is executed.

The condition for the DTE bit being set to 1 is as follows:

- When 1 is written to the DTE bit after the DTE bit is read as 0

Bit 7—Data Transfer Enable 1B (DTE1B): Enables or disables data transfer on channel 1B.

Bit 7 DTE1B	Description
0	Data transfer disabled (Initial value)
1	Data transfer enabled

Bit 6—Data Transfer Enable 1A (DTE1A): Enables or disables data transfer on channel 1A.

Bit 6 DTE1A	Description
0	Data transfer disabled (Initial value)
1	Data transfer enabled

Bit 5—Data Transfer Enable 0B (DTE0B): Enables or disables data transfer on channel 0B.

Bit 5 DTE0B	Description
0	Data transfer disabled (Initial value)
1	Data transfer enabled

Bit 4—Data Transfer Enable 0A (DTE0A): Enables or disables data transfer on channel 0A.

Bit 4 DTE0A	Description	
0	Data transfer disabled	(Initial value)
1	Data transfer enabled	

Bits 3 to 0—Data Transfer End Interrupt Enable (DTIE): These bits enable or disable an interrupt to the CPU or DTC when transfer ends. If the DTIE bit is set to 1 when DTE = 0, the DMAC regards this as indicating the end of a transfer, and issues a transfer end interrupt request to the CPU or DTC.

A transfer end interrupt can be canceled either by clearing the DTIE bit to 0 in the interrupt handling routine, or by performing processing to continue transfer by setting the transfer counter and address register again, and then setting the DTE bit to 1.

Bit 3—Data Transfer Interrupt Enable 1B (DTIE1B): Enables or disables the channel 1B transfer end interrupt.

Bit 3 DTIE1B	Description	
0	Transfer end interrupt disabled	(Initial value)
1	Transfer end interrupt enabled	

Bit 2—Data Transfer Interrupt Enable 1A (DTIE1A): Enables or disables the channel 1A transfer end interrupt.

Bit 2 DTIE1A	Description	
0	Transfer end interrupt disabled	(Initial value)
1	Transfer end interrupt enabled	

Bit 1—Data Transfer Interrupt Enable 0B (DTIE0B): Enables or disables the channel 0B transfer end interrupt.

Bit 1 DTIE0B	Description	
0	Transfer end interrupt disabled	(Initial value)
1	Transfer end interrupt enabled	

Bit 0—Data Transfer Interrupt Enable 0A (DTIE0A): Enables or disables the channel 0A transfer end interrupt.

Bit 0 DTIE0A	Description	
0	Transfer end interrupt disabled	(Initial value)
1	Transfer end interrupt enabled	

7.3 Register Descriptions (2) (Full Address Mode)

Full address mode transfer is performed with channels A and B together. For details of full address mode setting, see table 7-4.

7.3.1 Memory Address Register (MAR)

Bit	:	31	30	29	28	27	26	25	24	23	22	21	20	19	18	17	16
MAR	:	—	—	—	—	—	—	—	—								
Initial value	:	0	0	0	0	0	0	0	0	*	*	*	*	*	*	*	*
R/W	:	—	—	—	—	—	—	—	—	R/W	R/W	R/W	R/W	R/W	R/W	R/W	R/W

Bit	:	15	14	13	12	11	10	9	8	7	6	5	4	3	2	1	0
MAR	:																
Initial value	:	*	*	*	*	*	*	*	*	*	*	*	*	*	*	*	*
R/W	:	R/W	R/W	R/W	R/W	R/W	R/W	R/W	R/W	R/W	R/W	R/W	R/W	R/W	R/W	R/W	R/W

*: Undefined

MAR is a 32-bit readable/writable register; MARA functions as the transfer source address register, and MARB as the destination address register.

MAR is composed of two 16-bit registers, MARH and MARL. The upper 8 bits of MARH are reserved; they are always read as 0, and cannot be modified.

MAR is incremented or decremented each time a byte or word transfer is executed, so that the source or destination memory address can be updated automatically. For details, see section 7.3.4, DMA Control Register (DMACR).

MAR is not initialized by a reset or in standby mode.

7.3.2 I/O Address Register (IOAR)

IOAR is not used in full address transfer.

7.3.3 Execute Transfer Count Register (ETCR)

ETCR is a 16-bit readable/writable register that specifies the number of transfers. The function of this register is different in normal mode and in block transfer mode.

ETCR is not initialized by a reset or in standby mode.

(1) Normal Mode

ETCRA

Transfer Counter

Bit	:	15	14	13	12	11	10	9	8	7	6	5	4	3	2	1	0
ETCR	:																
Initial value	:	*	*	*	*	*	*	*	*	*	*	*	*	*	*	*	*
R/W	:	R/W	R/W	R/W	R/W	R/W	R/W	R/W	R/W	R/W	R/W	R/W	R/W	R/W	R/W	R/W	R/W

*: Undefined

In normal mode, ETCRA functions as a 16-bit transfer counter. ETCRA is decremented by 1 each time a transfer is performed, and transfer ends when the count reaches H'0000. ETCRB is not used at this time.

ETCRB

ETCRB is not used in normal mode.

(2) Block Transfer Mode

ETCRA

Holds block size

Bit	:	15	14	13	12	11	10	9	8
ETCRAH	:								
Initial value	:	*	*	*	*	*	*	*	*
R/W	:	R/W	R/W	R/W	R/W	R/W	R/W	R/W	R/W

Block size counter

Bit	:	7	6	5	4	3	2	1	0
ETCRAL	:								
Initial value	:	*	*	*	*	*	*	*	*
R/W	:	R/W	R/W	R/W	R/W	R/W	R/W	R/W	R/W

*: Undefined

ETCRB

Block Transfer Counter

Bit	:	15	14	13	12	11	10	9	8	7	6	5	4	3	2	1	0
ETCRB	:																
Initial value	:	*	*	*	*	*	*	*	*	*	*	*	*	*	*	*	*
R/W	:	R/W	R/W	R/W	R/W	R/W	R/W	R/W	R/W	R/W	R/W	R/W	R/W	R/W	R/W	R/W	R/W

In block transfer mode, ETCRAL functions as an 8-bit block size counter and ETCRAH holds the block size. ETCRAL is decremented each time a 1-byte or 1-word transfer is performed, and when the count reaches H'00, ETCRAL is loaded with the value in ETCRAH. So by setting the block size in ETCRAH and ETCRAL, it is possible to repeatedly transfer blocks consisting of any desired number of bytes or words.

ETCRB functions in block transfer mode, as a 16-bit block transfer counter. ETCRB is decremented by 1 each time a block is transferred, and transfer ends when the count reaches H'0000.

7.3.4 DMA Control Register (DMACR)

DMACR is a 16-bit readable/writable register that controls the operation of each DMAC channel. In full address mode, DMACRA and DMACRB have different functions.

DMACR is initialized to H'0000 by a reset, and in hardware standby mode.

DMACRA

Bit :	15	14	13	12	11	10	9	8
DMACRA :	DTSZ	SAID	SAIDE	BLKDIR	BLKE	—	—	—
Initial value :	0	0	0	0	0	0	0	0
R/W :	R/W	R/W	R/W	R/W	R/W	R/W	R/W	R/W

DMACRB

Bit :	7	6	5	4	3	2	1	0
DMACRB :	—	DAID	DAIDE	—	DTF3	DTF2	DTF1	DTF0
Initial value :	0	0	0	0	0	0	0	0
R/W :	R/W	R/W	R/W	R/W	R/W	R/W	R/W	R/W

Bit 15—Data Transfer Size (DTSZ): Selects the size of data to be transferred at one time.

Bit 15 DTSZ	Description	
0	Byte-size transfer	(Initial value)
1	Word-size transfer	

Bit 14—Source Address Increment/Decrement (SAID)

Bit 13—Source Address Increment/Decrement Enable (SAIDE): These bits specify whether source address register MARA is to be incremented, decremented, or left unchanged, when data transfer is performed.

Bit 14 SAID	Bit 13 SAIDE	Description	
0	0	MARA is fixed	(Initial value)
	1	MARA is incremented after a data transfer • When DTSZ = 0, MARA is incremented by 1 after a transfer • When DTSZ = 1, MARA is incremented by 2 after a transfer	
1	0	MARA is fixed	
	1	MARA is decremented after a data transfer • When DTSZ = 0, MARA is decremented by 1 after a transfer • When DTSZ = 1, MARA is decremented by 2 after a transfer	

Bit 12—Block Direction (BLKDIR)

Bit 11—Block Enable (BLKE): These bits specify whether normal mode or block transfer mode is to be used. If block transfer mode is specified, the BLKDIR bit specifies whether the source side or the destination side is to be the block area.

Bit 12 BLKDIR	Bit 11 BLKE	Description
0	0	Transfer in normal mode (Initial value)
	1	Transfer in block transfer mode, destination side is block area
1	0	Transfer in normal mode
	1	Transfer in block transfer mode, source side is block area

For operation in normal mode and block transfer mode, see section 7.5, Operation.

Bits 10 to 7—Reserved: Can be read or written to. Write 0 to these bits.

Bit 6—Destination Address Increment/Decrement (DAID)

Bit 5—Destination Address Increment/Decrement Enable (DAIDE): These bits specify whether destination address register MARB is to be incremented, decremented, or left unchanged, when data transfer is performed.

Bit 6 DAID	Bit 5 DAIDE	Description
0	0	MARB is fixed (Initial value)
	1	MARB is incremented after a data transfer • When DTSZ = 0, MARB is incremented by 1 after a transfer • When DTSZ = 1, MARB is incremented by 2 after a transfer
1	0	MARB is fixed
	1	MARB is decremented after a data transfer • When DTSZ = 0, MARB is decremented by 1 after a transfer • When DTSZ = 1, MARB is decremented by 2 after a transfer

Bit 4—Reserved: Can be read or written to. Write 0 to this bit.

Bits 3 to 0—Data Transfer Factor (DTF3 to DTF0): These bits select the data transfer factor (activation source). The factors that can be specified differ between normal mode and block transfer mode.

- Normal Mode

Bit 3 DTF3	Bit 2 DTF2	Bit 1 DTF1	Bit 0 DTF0	Description
0	0	0	0	— (Initial value)
			1	—
		1	0	Activated by $\overline{\text{DREQ}}$ pin falling edge input
			1	Activated by $\overline{\text{DREQ}}$ pin low-level input
	1	0	×	—
		1	0	Auto-request (cycle steal)
			1	Auto-request (burst)
1	×	×	×	—

×: Don't care

- Block Transfer Mode

Bit 3 DTF3	Bit 2 DTF2	Bit 1 DTF1	Bit 0 DTF0	Description
0	0	0	0	— (Initial value)
			1	Activated by A/D converter conversion end interrupt
		1	0	Activated by $\overline{\text{DREQ}}$ pin falling edge input*
			1	Activated by $\overline{\text{DREQ}}$ pin low-level input
	1	0	0	Activated by SCI channel 0 transmission data empty interrupt
			1	Activated by SCI channel 0 reception data full interrupt
		1	0	Activated by SCI channel 1 transmission data empty interrupt
			1	Activated by SCI channel 1 reception data full interrupt
1	0	0	0	Activated by TPU channel 0 compare match/input capture A interrupt
			1	Activated by TPU channel 1 compare match/input capture A interrupt
		1	0	Activated by TPU channel 2 compare match/input capture A interrupt
			1	Activated by TPU channel 3 compare match/input capture A interrupt
	1	0	0	Activated by TPU channel 4 compare match/input capture A interrupt
			1	Activated by TPU channel 5 compare match/input capture A interrupt
		1	0	—
			1	—

Note: * Detected as a low level in the first transfer after transfer is enabled.

The same factor can be selected for more than one channel. In this case, activation starts with the highest-priority channel according to the relative channel priorities. For relative channel priorities, see section 7.5.13, DMAC Multi-Channel Operation.

7.3.5 DMA Band Control Register (DMABCR)

Bit :	15	14	13	12	11	10	9	8
DMABCRH :	FAE1	FAE0	—	—	DTA1	—	DTA0	—
Initial value :	0	0	0	0	0	0	0	0
R/W :	R/W	R/W	R/W	R/W	R/W	R/W	R/W	R/W

Bit :	7	6	5	4	3	2	1	0
DMABCRL :	DTME1	DTE1	DTME0	DTE0	DTIE1B	DTIE1A	DTIE0B	DTIE0A
Initial value :	0	0	0	0	0	0	0	0
R/W :	R/W	R/W	R/W	R/W	R/W	R/W	R/W	R/W

DMABCR is a 16-bit readable/writable register that controls the operation of each DMAC channel.

DMABCR is initialized to H'0000 by a reset, and in standby mode.

Bit 15—Full Address Enable 1 (FAE1): Specifies whether channel 1 is to be used in short address mode or full address mode.

In full address mode, channels 1A and 1B are used together as a single channel.

Bit 15 FAE1	Description	
0	Short address mode	(Initial value)
1	Full address mode	

Bit 14—Full Address Enable 0 (FAE0): Specifies whether channel 0 is to be used in short address mode or full address mode.

In full address mode, channels 0A and 0B are used together as a single channel.

Bit 14 FAE0	Description	
0	Short address mode	(Initial value)
1	Full address mode	

Bits 13 and 12—Reserved: Can be read or written to. Write 0 to these bits.

Bits 11 and 9—Data Transfer Acknowledge (DTA): These bits enable or disable clearing, when DMA transfer is performed, of the internal interrupt source selected by the data transfer factor setting.

When DTE = 1 and DTA = 1, the internal interrupt source selected by the data transfer factor setting is cleared automatically by DMA transfer. When DTE = 1 and DTA = 1, the internal interrupt source selected by the data transfer factor setting does not issue an interrupt request to the CPU or DTC.

When the DTE = 1 and the DTA = 0, the internal interrupt source selected by the data transfer factor setting is not cleared when a transfer is performed, and can issue an interrupt request to the CPU or DTC in parallel. In this case, the interrupt source should be cleared by the CPU or DTC transfer.

When the DTE = 0, the internal interrupt source selected by the data transfer factor setting issues an interrupt request to the CPU or DTC regardless of the DTA bit setting.

The state of the DTME bit does not affect the above operations.

Bit 11—Data Transfer Acknowledge 1 (DTA1): Enables or disables clearing, when DMA transfer is performed, of the internal interrupt source selected by the channel 1 data transfer factor setting.

Bit 11 DTA1	Description
0	Clearing of selected internal interrupt source at time of DMA transfer is disabled (Initial value)
1	Clearing of selected internal interrupt source at time of DMA transfer is enabled

Bit 9—Data Transfer Acknowledge 0 (DTA0): Enables or disables clearing, when DMA transfer is performed, of the internal interrupt source selected by the channel 0 data transfer factor setting.

Bit 9 DTA0	Description
0	Clearing of selected internal interrupt source at time of DMA transfer is disabled (Initial value)
1	Clearing of selected internal interrupt source at time of DMA transfer is enabled

Bits 10 and 8—Reserved: Can be read or written to. Write 0 to these bits.

Bits 7 and 5—Data Transfer Master Enable (DTME): Together with the DTE bit, these bits control enabling or disabling of data transfer on the relevant channel. When both the DTME bit and the DTE bit are set to 1, transfer is enabled for the channel.

If the relevant channel is in the middle of a burst mode transfer when an NMI interrupt is generated, the DTME bit is cleared, the transfer is interrupted, and bus mastership passes to the CPU. When the DTME bit is subsequently set to 1 again, the interrupted transfer is resumed. In block transfer mode, however, the DTME bit is not cleared by an NMI interrupt, and transfer is not interrupted.

The conditions for the DTME bit being cleared to 0 are as follows:

- When initialization is performed
- When NMI is input in burst mode
- When 0 is written to the DTME bit

The condition for DTME being set to 1 is as follows:

- When 1 is written to DTME after DTME is read as 0

Bit 7—Data Transfer Master Enable 1 (DTME1): Enables or disables data transfer on channel 1.

Bit 7 DTME1	Description	
0	Data transfer disabled. In burst mode, cleared to 0 by an NMI interrupt	(Initial value)
1	Data transfer enabled	

Bit 5—Data Transfer Master Enable 0 (DTME0): Enables or disables data transfer on channel 0.

Bit 5 DTME0	Description	
0	Data transfer disabled. In normal mode, cleared to 0 by an NMI interrupt	(Initial value)
1	Data transfer enabled	

Bits 6 and 4—Data Transfer Enable (DTE): When DTE = 0, data transfer is disabled and the activation source selected by the data transfer factor setting is ignored. If the activation source is an internal interrupt, an interrupt request is issued to the CPU or DTC. If the DTIE bit is set to 1 when DTE = 0, the DMAC regards this as indicating the end of a transfer, and issues a transfer end interrupt request to the CPU.

The conditions for the DTE bit being cleared to 0 are as follows:

- When initialization is performed
- When the specified number of transfers have been completed
- When 0 is written to the DTE bit to forcibly abort the transfer, or for a similar reason

When DTE = 1 and DTME = 1, data transfer is enabled and the DMAC waits for a request by the activation source selected by the data transfer factor setting. When a request is issued by the activation source, DMA transfer is executed.

The condition for the DTE bit being set to 1 is as follows:

- When 1 is written to the DTE bit after the DTE bit is read as 0

Bit 6—Data Transfer Enable 1 (DTE1): Enables or disables data transfer on channel 1.

Bit 6 DTE1	Description	
0	Data transfer disabled	(Initial value)
1	Data transfer enabled	

Bit 4—Data Transfer Enable 0 (DTE0): Enables or disables data transfer on channel 0.

Bit 4 DTE0	Description	
0	Data transfer disabled	(Initial value)
1	Data transfer enabled	

Bits 3 and 1—Data Transfer Interrupt Enable B (DTIEB): These bits enable or disable an interrupt to the CPU or DTC when transfer is interrupted. If the DTIEB bit is set to 1 when DTME = 0, the DMAC regards this as indicating a break in the transfer, and issues a transfer break interrupt request to the CPU or DTC.

A transfer break interrupt can be canceled either by clearing the DTIEB bit to 0 in the interrupt handling routine, or by performing processing to continue transfer by setting the DTME bit to 1.

Bit 3—Data Transfer Interrupt Enable 1B (DTIE1B): Enables or disables the channel 1 transfer break interrupt.

Bit 3 DTIE1B	Description	
0	Transfer break interrupt disabled	(Initial value)
1	Transfer break interrupt enabled	

Bit 1—Data Transfer Interrupt Enable 0B (DTIE0B): Enables or disables the channel 0 transfer break interrupt.

Bit 1 DTIE0B	Description	
0	Transfer break interrupt disabled	(Initial value)
1	Transfer break interrupt enabled	

Bits 2 and 0—Data Transfer End Interrupt Enable A (DTIEA): These bits enable or disable an interrupt to the CPU or DTC when transfer ends. If DTIEA bit is set to 1 when DTE = 0, the DMAC regards this as indicating the end of a transfer, and issues a transfer end interrupt request to the CPU or DTC.

A transfer end interrupt can be canceled either by clearing the DTIEA bit to 0 in the interrupt handling routine, or by performing processing to continue transfer by setting the transfer counter and address register again, and then setting the DTE bit to 1.

Bit 2—Data Transfer Interrupt Enable 1A (DTIE1A): Enables or disables the channel 1 transfer end interrupt.

Bit 2 DTIE1A	Description	
0	Transfer end interrupt disabled	(Initial value)
1	Transfer end interrupt enabled	

Bit 0—Data Transfer Interrupt Enable 0A (DTIE0A): Enables or disables the channel 0 transfer end interrupt.

Bit 0 DTIE0A	Description	
0	Transfer end interrupt disabled	(Initial value)
1	Transfer end interrupt enabled	

7.4 Register Descriptions (3)

7.4.1 DMA Write Enable Register (DMAWER)

The DMAC can activate the DTC with a transfer end interrupt, rewrite the channel on which the transfer ended using a DTC chain transfer, and reactivate the DTC. DMAWER applies restrictions so that specific bits of DMACR for the specific channel, and also DMATCR and DMABCR, can be changed to prevent inadvertent rewriting of registers other than those for the channel concerned. The restrictions applied by DMAWER are valid for the DTC.

Figure 7-2 shows the transfer areas for activating the DTC with a channel 0A transfer end interrupt, and reactivating channel 0A. The address register and count register area is re-set by the first DTC transfer, then the control register area is re-set by the second DTC chain transfer.

When re-setting the control register area, perform masking by setting bits in DMAWER to prevent modification of the contents of the other channels.

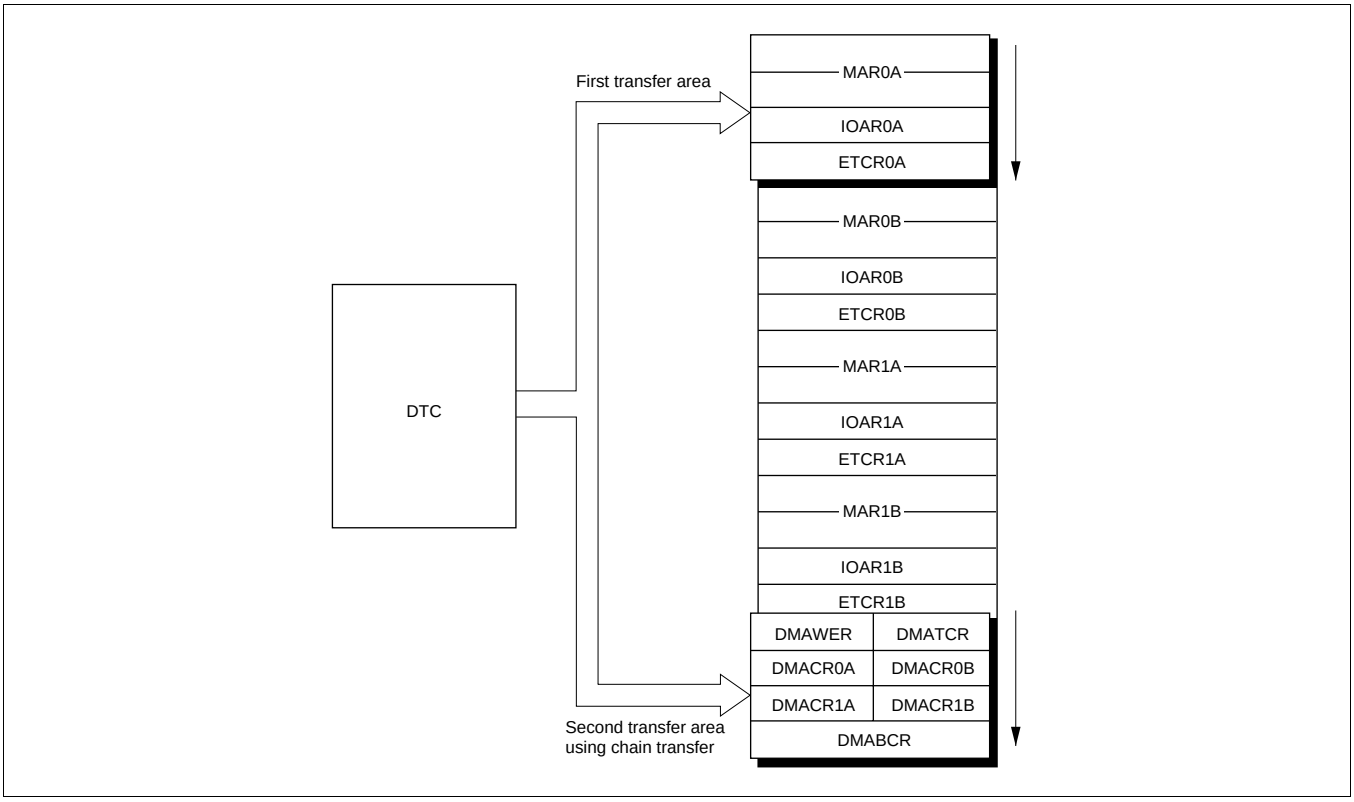

Figure 7-2 Areas for Register Re-Setting by DTC (Example: Channel 0A)

Bit :	7	6	5	4	3	2	1	0
DMAWER :	—	—	—	—	WE1B	WE1A	WE0B	WE0A
Initial value :	0	0	0	0	0	0	0	0
R/W :	—	—	—	—	R/W	R/W	R/W	R/W

DMAWER is an 8-bit readable/writable register that controls enabling or disabling of writes to the DMACR, DMABCR, and DMATCR by the DTC.

DMAWER is initialized to H'00 by a reset, and in standby mode.

Bits 7 to 4—Reserved: These bits cannot be modified and are always read as 0.

Bit 3—Write Enable 1B (WE1B): Enables or disables writes to all bits in DMACR1B, bits 11, 7, and 3 in DMABCR, and bit 5 in DMATCR by the DTC.

Bit 3 WE1B	Description
0	Writes to all bits in DMACR1B, bits 11, 7, and 3 in DMABCR, and bit 5 in DMATCR are disabled (Initial value)
1	Writes to all bits in DMACR1B, bits 11, 7, and 3 in DMABCR, and bit 5 in DMATCR are enabled

Bit 2—Write Enable 1A (WE1A): Enables or disables writes to all bits in DMACR1A, and bits 10, 6, and 2 in DMABCR by the DTC.

Bit 2 WE1A	Description
0	Writes to all bits in DMACR1A, and bits 10, 6, and 2 in DMABCR are disabled (Initial value)
1	Writes to all bits in DMACR1A, and bits 10, 6, and 2 in DMABCR are enabled

Bit 1—Write Enable 0B (WE0B): Enables or disables writes to all bits in DMACR0B, bits 9, 5, and 1 in DMABCR, and bit 4 in DMATCR.

Bit 1 WE0B	Description
0	Writes to all bits in DMACR0B, bits 9, 5, and 1 in DMABCR, and bit 4 in DMATCR are disabled (Initial value)
1	Writes to all bits in DMACR0B, bits 9, 5, and 1 in DMABCR, and bit 4 in DMATCR are enabled

Bit 0—Write Enable 0A (WE0A): Enables or disables writes to all bits in DMACR0A, and bits 8, 4, and 0 in DMABCR.

Bit 0 WE0A	Description
0	Writes to all bits in DMACR0A, and bits 8, 4, and 0 in DMABCR are disabled (Initial value)
1	Writes to all bits in DMACR0A, and bits 8, 4, and 0 in DMABCR are enabled

Writes by the DTC to bits 15 to 12 (FAE and SAE) in DMABCR are invalid regardless of the DMAWER settings. These bits should be changed, if necessary, by CPU processing.

In writes by the DTC to bits 7 to 4 (DTE) in DMABCR, 1 can be written without first reading 0. To reactivate a channel set to full address mode, write 1 to both Write Enable A and Write Enable B for the channel to be reactivated.

MAR, IOAR, and ETCR are always write-enabled regardless of the DMAWER settings. When modifying these registers, the channel for which the modification is to be made should be halted.

7.4.2 DMA Terminal Control Register (DMATCR)

Bit	:	7	6	5	4	3	2	1	0
DMATCR	:	—	—	TEE1	TEE0	—	—	—	—
Initial value	:	0	0	0	0	0	0	0	0
R/W	:	—	—	R/W	R/W	—	—	—	—

DMATCR is an 8-bit readable/writable register that controls enabling or disabling of DMAC transfer end pin output. A port can be set for output automatically, and a transfer end signal output, by setting the appropriate bit.

DMATCR is initialized to H'00 by a reset, and in standby mode.

Bits 7 and 6—Reserved: These bits cannot be modified and are always read as 0.

Bit 5—Transfer End Enable 1 (TEE1): Enables or disables transfer end pin 1 ($\overline{\text{TEND1}}$) output.

Bit 5 TEE1	Description	
0	$\overline{\text{TEND1}}$ pin output disabled	(Initial value)
1	$\overline{\text{TEND1}}$ pin output enabled	

Bit 4—Transfer End Enable 0 (TEE0): Enables or disables transfer end pin 0 ($\overline{\text{TEND0}}$) output.

Bit 4 TEE0	Description	
0	$\overline{\text{TEND0}}$ pin output disabled	(Initial value)
1	$\overline{\text{TEND0}}$ pin output enabled	

The $\overline{\text{TEND}}$ pins are assigned only to channel B in short address mode.

The transfer end signal indicates the transfer cycle in which the transfer counter reached 0, regardless of the transfer source. An exception is block transfer mode, in which the transfer end signal indicates the transfer cycle in which the block counter reached 0.

Bits 3 to 0—Reserved: These bits cannot be modified and are always read as 0.

7.4.3 Module Stop Control Register (MSTPCR)

	MSTPCRH								MSTPCRL							
Bit :	15	14	13	12	11	10	9	8	7	6	5	4	3	2	1	0
Initial value :	0	0	1	1	1	1	1	1	1	1	1	1	1	1	1	1
R/W :	R/W	R/W	R/W	R/W	R/W	R/W	R/W	R/W	R/W	R/W	R/W	R/W	R/W	R/W	R/W	R/W

MSTPCR is a 16-bit readable/writable register that performs module stop mode control.

When the MSTP15 bit in MSTPCR is set to 1, the DMAC operation stops at the end of the bus cycle and a transition is made to module stop mode. For details, see section 21.5, Module Stop Mode.

MSTPCR is initialized to H'3FFF by a reset and in hardware standby mode. It is not initialized in software standby mode.

Bit 15—Module Stop (MSTP15): Specifies the DMAC module stop mode.

Bits 15 MSTP15	Description	
0	DMAC module stop mode cleared	(Initial value)
1	DMAC module stop mode set	

7.5 Operation

7.5.1 Transfer Modes

Table 7-5 lists the DMAC modes.

Table 7-5 DMAC Transfer Modes

Transfer Mode			Transfer Source	Remarks
Short address mode	Dual address mode	(1) Sequential mode (2) Idle mode (3) Repeat mode	• TPU channel 0 to 5 compare match/input capture A interrupts • SCI transmission data empty interrupt • SCI reception data full interrupt • A/D converter conversion end interrupt • External request	• Up to 4 channels can operate independently • External request applies to channel B only • Single address mode applies to channel B only • Modes (1), (2), and (3) can also be specified for single address mode
	(4) Single address mode			
Full address mode	(5) Normal mode		• External request • Auto-request	• Max. 2-channel operation, combining channels A and B • With auto-request, burst mode transfer or cycle steal transfer can be selected
	(6) Block transfer mode		• TPU channel 0 to 5 compare match/input capture A interrupt • SCI transmission data empty interrupt • SCI reception data full interrupt • A/D converter conversion end interrupt • External request	

Operation in each mode is summarized below.

(1) Sequential mode

In response to a single transfer request, the specified number of transfers are carried out, one byte or one word at a time. An interrupt request can be sent to the CPU or DTC when the specified number of transfers have been completed. One address is specified as 24 bits, and the other as 16 bits. The transfer direction is programmable.

(2) Idle mode

In response to a single transfer request, the specified number of transfers are carried out, one byte or one word at a time. An interrupt request can be sent to the CPU or DTC when the specified number of transfers have been completed. One address is specified as 24 bits, and the other as 16 bits. The transfer source address and transfer destination address are fixed. The transfer direction is programmable.

(3) Repeat mode

In response to a single transfer request, the specified number of transfers are carried out, one byte or one word at a time. When the specified number of transfers have been completed, the addresses and transfer counter are restored to their original settings, and operation is continued. No interrupt request is sent to the CPU or DTC. One address is specified as 24 bits, and the other as 16 bits. The transfer direction is programmable.

(4) Single address mode

In response to a single transfer request, the specified number of transfers are carried out between external memory and an external device, one byte or one word at a time. Unlike dual address mode, source and destination accesses are performed in parallel. Therefore, either the source or the destination is an external device which can be accessed with a strobe alone, using the $\overline{\text{DACK}}$ pin. One address is specified as 24 bits, and for the other, the pin is set automatically. The transfer direction is programmable.

Modes (1), (2) and (3) can also be specified for single address mode.

(5) Normal mode

- Auto-request

  By means of register settings only, the DMAC is activated, and transfer continues until the specified number of transfers have been completed. An interrupt request can be sent to the CPU or DTC when transfer is completed. Both addresses are specified as 24 bits.

  — Cycle steal mode: The bus is released to another bus master every byte or word transfer.

  — Burst mode: The bus is held and transfer continued until the specified number of transfers have been completed.

- External request

  In response to a single transfer request, the specified number of transfers are carried out, one byte or one word at a time. An interrupt request can be sent to the CPU or DTC when the specified number of transfers have been completed. Both addresses are specified as 24 bits.

(6) Block transfer mode

In response to a single transfer request, a block transfer of the specified block size is carried out. This is repeated the specified number of times, once each time there is a transfer request. At the end of each single block transfer, one address is restored to its original setting. An interrupt request can be sent to the CPU or DTC when the specified number of block transfers have been completed. Both addresses are specified as 24 bits.

7.5.2 Sequential Mode

Sequential mode can be specified by clearing the RPE bit in DMACR to 0. In sequential mode, MAR is updated after each byte or word transfer in response to a single transfer request, and this is executed the number of times specified in ETCR.

One address is specified by MAR, and the other by IOAR. The transfer direction can be specified by the DTDIR bit in DMACR.

Table 7-6 summarizes register functions in sequential mode.

Table 7-6 Register Functions in Sequential Mode

Register	Function: DTDIR = 0	Function: DTDIR = 1	Initial Setting	Operation
23 … 0 MAR	Source address register	Destination address register	Start address of transfer destination or transfer source	Incremented/ decremented every transfer
23 … 15 … 0 H'FF | IOAR	Destination address register	Source address register	Start address of transfer source or transfer destination	Fixed
15 … 0 ETCR	Transfer counter		Number of transfers	Decremented every transfer; transfer ends when count reaches H'0000

Legend:
MAR: Memory address register
IOAR: I/O address register
ETCR: Transfer count register
DTDIR: Data transfer direction bit

MAR specifies the start address of the transfer source or transfer destination as 24 bits. MAR is incremented or decremented by 1 or 2 each time a byte or word is transferred.

IOAR specifies the lower 16 bits of the other address. The 8 bits above IOAR have a value of H'FF.

Figure 7-3 illustrates operation in sequential mode.

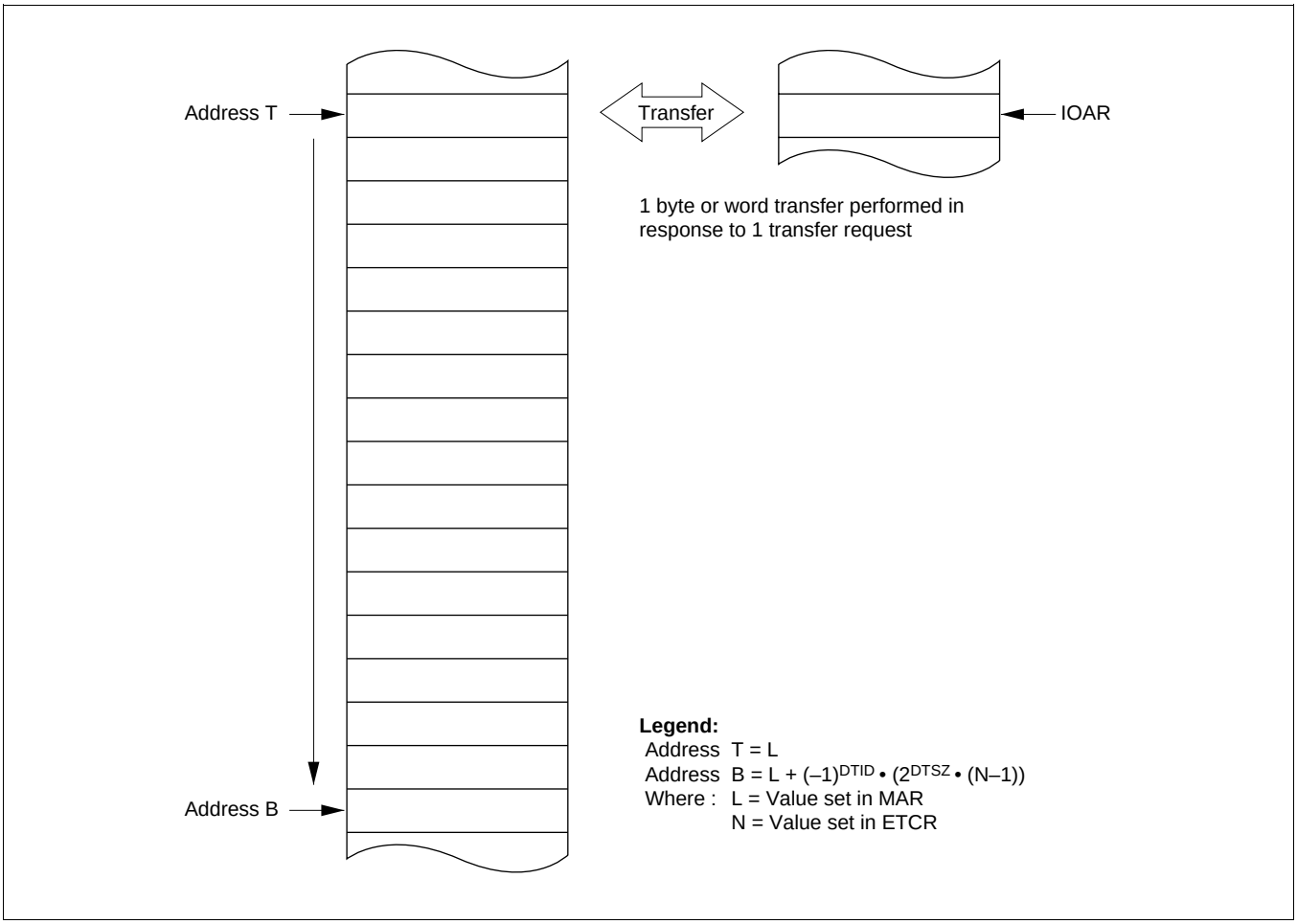

Figure 7-3 Operation in Sequential Mode

The number of transfers is specified as 16 bits in ETCR. ETCR is decremented by 1 each time a transfer is executed, and when its value reaches H'0000, the DTE bit is cleared and transfer ends. If the DTIE bit is set to 1 at this time, an interrupt request is sent to the CPU or DTC.

The maximum number of transfers, when H'0000 is set in ETCR, is 65,536.

Transfer requests (activation sources) consist of A/D converter conversion end interrupts, external requests, SCI transmission data empty and reception data full interrupts, and TPU channel 0 to 5 compare match/input capture A interrupts. External requests can be set for channel B only.

Figure 7-4 shows an example of the setting procedure for sequential mode.

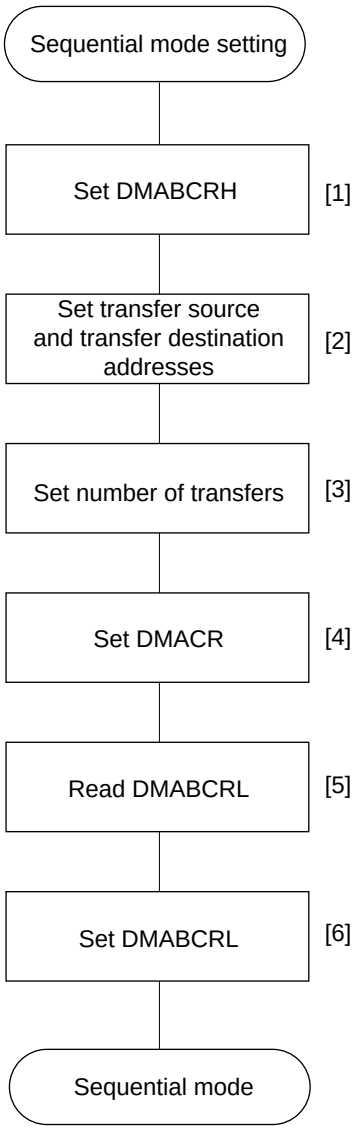

[1] Set each bit in DMABCRH.
- Clear the FAE bit to 0 to select short address mode.
- Specify enabling or disabling of internal interrupt clearing with the DTA bit.

[2] Set the transfer source address and transfer destination address in MAR and IOAR.

[3] Set the number of transfers in ETCR.

[4] Set each bit in DMACR.
- Set the transfer data size with the DTSZ bit.
- Specify whether MAR is to be incremented or decremented with the DTID bit.
- Clear the RPE bit to 0 to select sequential mode.
- Specify the transfer direction with the DTDIR bit.
- Select the activation source with bits DTF3 to DTF0.

[5] Read the DTE bit in DMABCRL as 0.

[6] Set each bit in DMABCRL.
- Specify enabling or disabling of transfer end interrupts with the DTIE bit.
- Set the DTE bit to 1 to enable transfer.

Figure 7-4 Example of Sequential Mode Setting Procedure

7.5.3 Idle Mode

Idle mode can be specified by setting the RPE bit and DTIE bit in DMACR to 1. In idle mode, one byte or word is transferred in response to a single transfer request, and this is executed the number of times specified in ETCR.

One address is specified by MAR, and the other by IOAR. The transfer direction can be specified by the DTDIR bit in DMACR.

Table 7-7 summarizes register functions in idle mode.

Table 7-7 Register Functions in Idle Mode

Register	Function		Initial Setting	Operation
	DTDIR = 0	DTDIR = 1		
23 … 0: MAR	Source address register	Destination address register	Start address of transfer destination or transfer source	Fixed
23 … 15 … 0: H'FF | IOAR	Destination address register	Source address register	Start address of transfer source or transfer destination	Fixed
15 … 0: ETCR	Transfer counter		Number of transfers	Decremented every transfer; transfer ends when count reaches H'0000

Legend:
MAR: Memory address register
IOAR: I/O address register
ETCR: Transfer count register
DTDIR: Data transfer direction bit

MAR specifies the start address of the transfer source or transfer destination as 24 bits. MAR is neither incremented nor decremented each time a byte or word is transferred.

IOAR specifies the lower 16 bits of the other address. The 8 bits above IOAR have a value of H'FF.

Figure 7-5 illustrates operation in idle mode.

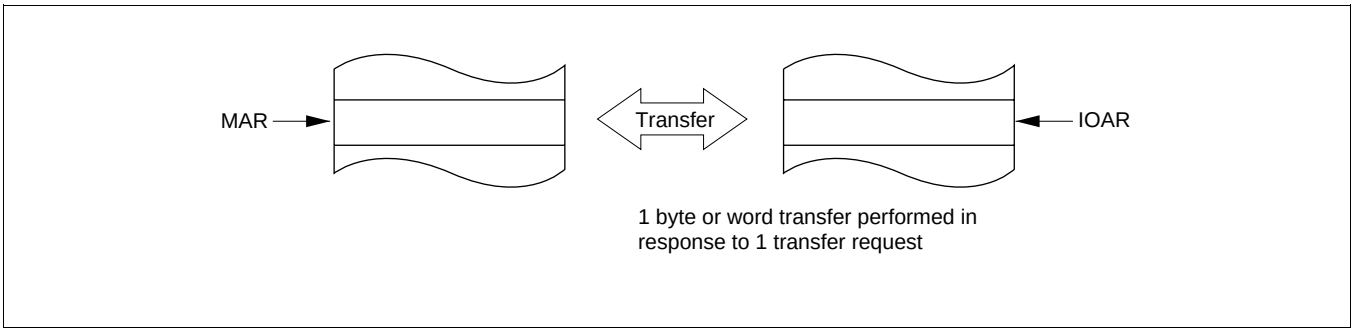

Figure 7-5 Operation in Idle Mode

The number of transfers is specified as 16 bits in ETCR. ETCR is decremented by 1 each time a transfer is executed, and when its value reaches H'0000, the DTE bit is cleared and transfer ends. If the DTIE bit is set to 1 at this time, an interrupt request is sent to the CPU or DTC.

The maximum number of transfers, when H'0000 is set in ETCR, is 65,536.

Transfer requests (activation sources) consist of A/D converter conversion end interrupts, external requests, SCI transmission data empty and reception data full interrupts, and TPU channel 0 to 5 compare match/input capture A interrupts. External requests can be set for channel B only.

When the DMAC is used in single address mode, only channel B can be set.

Figure 7-6 shows an example of the setting procedure for idle mode.

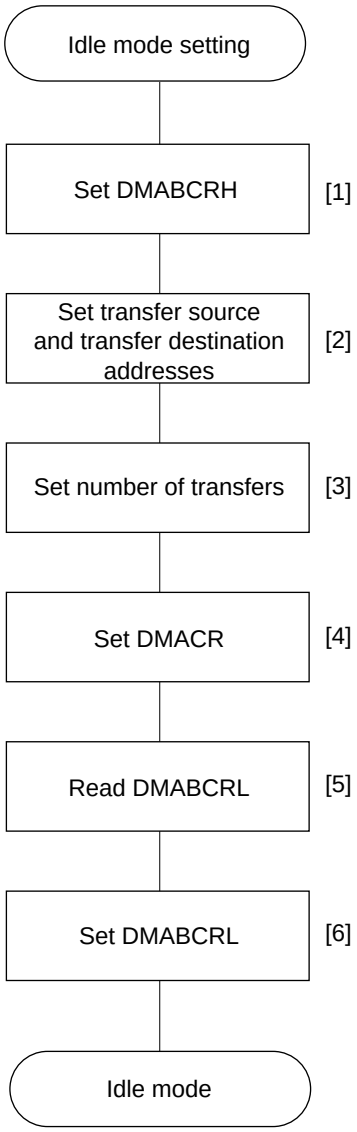

[1] Set each bit in DMABCRH.
- Clear the FAE bit to 0 to select short address mode.
- Specify enabling or disabling of internal interrupt clearing with the DTA bit.

[2] Set the transfer source address and transfer destination address in MAR and IOAR.

[3] Set the number of transfers in ETCR.

[4] Set each bit in DMACR.
- Set the transfer data size with the DTSZ bit.
- Specify whether MAR is to be incremented or decremented with the DTID bit.
- Set the RPE bit to 1.
- Specify the transfer direction with the DTDIR bit.
- Select the activation source with bits DTF3 to DTF0.

[5] Read the DTE bit in DMABCRL as 0.

[6] Set each bit in DMABCRL.
- Set the DTIE bit to 1.
- Set the DTE bit to 1 to enable transfer.

Figure 7-6 Example of Idle Mode Setting Procedure

7.5.4 Repeat Mode

Repeat mode can be specified by setting the RPE bit in DMACR to 1, and clearing the DTIE bit to 0. In repeat mode, MAR is updated after each byte or word transfer in response to a single transfer request, and this is executed the number of times specified in ETCR. On completion of the specified number of transfers, MAR and ETCRL are automatically restored to their original settings and operation continues.

One address is specified by MAR, and the other by IOAR. The transfer direction can be specified by the DTDIR bit in DMACR.

Table 7-8 summarizes register functions in repeat mode.

Table 7-8 Register Functions in Repeat Mode

Register	Function: DTDIR = 0	Function: DTDIR = 1	Initial Setting	Operation
23 … 0 MAR	Source address register	Destination address register	Start address of transfer destination or transfer source	Incremented/ decremented every transfer. Initial setting is restored when value reaches H'0000
23 … 15 … 0 H'FF IOAR	Destination address register	Source address register	Start address of transfer source or transfer destination	Fixed
7 … 0 ETCRH	Holds number of transfers		Number of transfers	Fixed
7 … 0 ETCRL	Transfer counter		Number of transfers	Decremented every transfer. Loaded with ETCRH value when count reaches H'00

Legend:
MAR: Memory address register
IOAR: I/O address register
ETCR: Transfer count register
DTDIR: Data transfer direction bit

MAR specifies the start address of the transfer source or transfer destination as 24 bits. MAR is incremented or decremented by 1 or 2 each time a byte or word is transferred.

IOAR specifies the lower 16 bits of the other address. The 8 bits above IOAR have a value of H'FF.

The number of transfers is specified as 8 bits by ETCRH and ETCRL. The maximum number of transfers, when H'00 is set in both ETCRH and ETCRL, is 256.

In repeat mode, ETCRL functions as the transfer counter, and ETCRH is used to hold the number of transfers. ETCRL is decremented by 1 each time a transfer is executed, and when its value reaches H'00, it is loaded with the value in ETCRH. At the same time, the value set in MAR is restored in accordance with the values of the DTSZ and DTID bits in DMACR. The MAR restoration operation is as shown below.

$$MAR = MAR - (-1)^{DTID} \cdot 2^{DTSZ} \cdot ETCRH$$

The same value should be set in ETCRH and ETCRL.

In repeat mode, operation continues until the DTE bit is cleared. To end the transfer operation, therefore, you should clear the DTE bit to 0. A transfer end interrupt request is not sent to the CPU or DTC.

By setting the DTE bit to 1 again after it has been cleared, the operation can be restarted from the transfer after that terminated when the DTE bit was cleared.

Figure 7-7 illustrates operation in repeat mode.

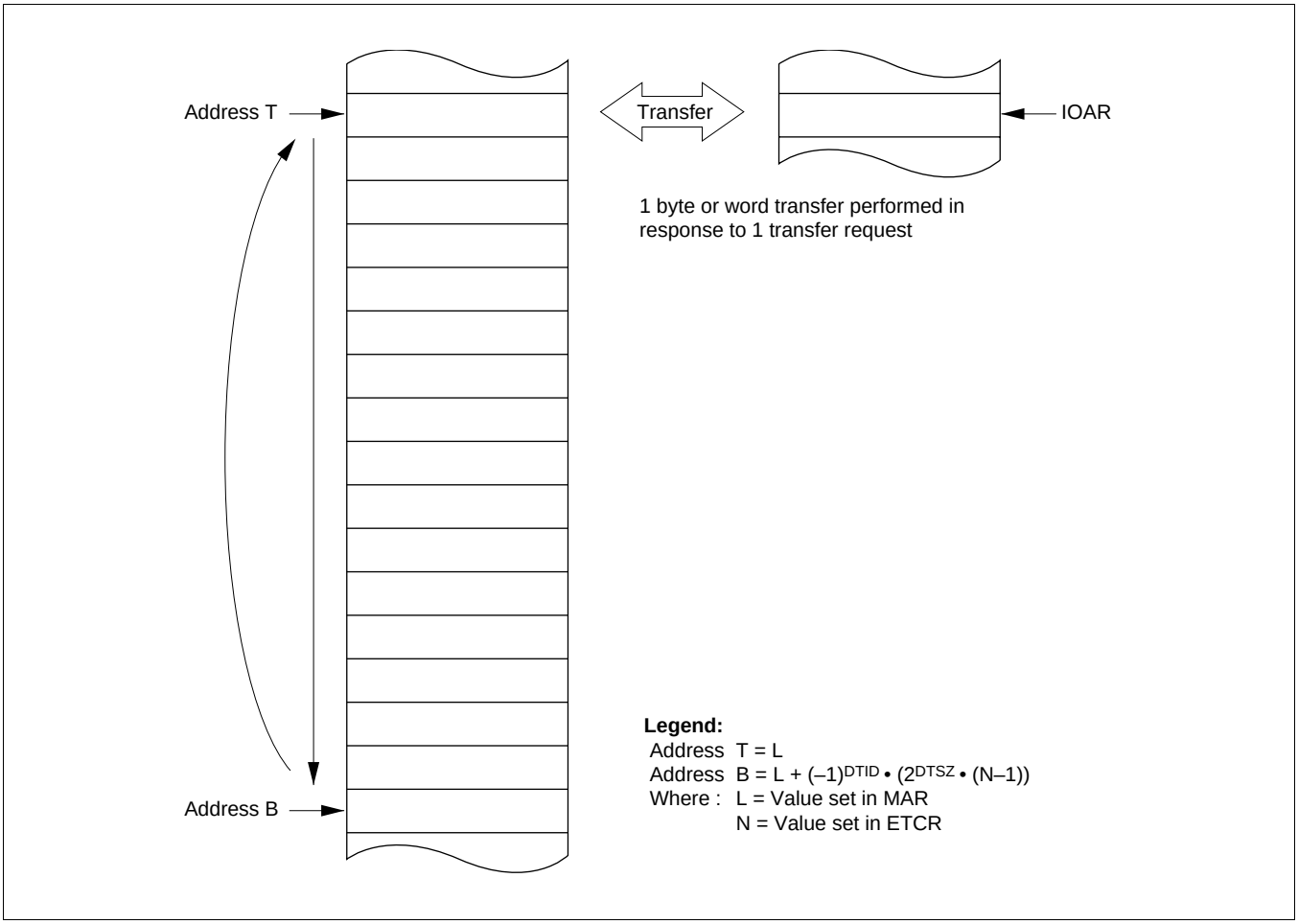

Figure 7-7 Operation in Repeat mode

Transfer requests (activation sources) consist of A/D converter conversion end interrupts, external requests, SCI transmission data empty and reception data full interrupts, and TPU channel 0 to 5 compare match/input capture A interrupts. External requests can be set for channel B only.

Figure 7-8 shows an example of the setting procedure for repeat mode.

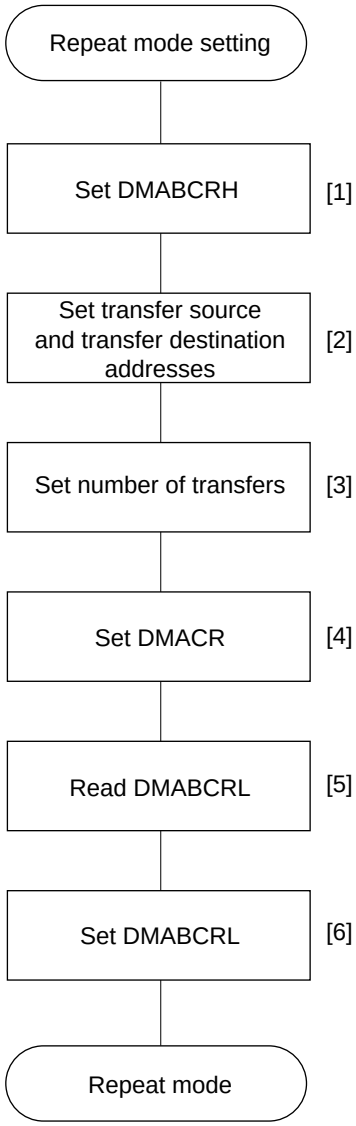

[1] Set each bit in DMABCRH.
- Clear the FAE bit to 0 to select short address mode.
- Specify enabling or disabling of internal interrupt clearing with the DTA bit.

[2] Set the transfer source address and transfer destination address in MAR and IOAR.

[3] Set the number of transfers in both ETCRH and ETCRL.

[4] Set each bit in DMACR.
- Set the transfer data size with the DTSZ bit.
- Specify whether MAR is to be incremented or decremented with the DTID bit.
- Set the RPE bit to 1.
- Specify the transfer direction with the DTDIR bit.
- Select the activation source with bits DTF3 to DTF0.

[5] Read the DTE bit in DMABCRL as 0.

[6] Set each bit in DMABCRL.
- Clear the DTIE bit to 0.
- Set the DTE bit to 1 to enable transfer.

Figure 7-8 Example of Repeat Mode Setting Procedure

7.5.5 Single Address Mode

Single address mode can only be specified for channel B. This mode can be specified by setting the SAE bit in DMABCR to 1 in short address mode.

One address is specified by MAR, and the other is set automatically to the data transfer acknowledge pin ($\overline{\text{DACK}}$). The transfer direction can be specified by the DTDIR in DMACR.

Table 7-9 summarizes register functions in single address mode.

Table 7-9 Register Functions in Single Address Mode

Register	Function		Initial Setting	Operation
	DTDIR = 0	DTDIR = 1		
23 MAR 0	Source address register	Destination address register	Start address of transfer destination or transfer source	*
$\overline{\text{DACK}}$ pin	Write strobe	Read strobe	(Set automatically by SAE bit; IOAR is invalid)	Strobe for external device
15 ETCR 0	Transfer counter		Number of transfers	*

Legend:
MAR: Memory address register
IOAR: I/O address register
ETCR: Transfer count register
DTDIR: Data transfer direction bit
$\overline{\text{DACK}}$: Data transfer acknowledge

Note: * See the operation descriptions in sections 7.5.2, Sequential Mode, 7.5.3, Idle Mode, and 7.5.4, Repeat Mode.

MAR specifies the start address of the transfer source or transfer destination as 24 bits.

IOAR is invalid; in its place the strobe for external devices ($\overline{\text{DACK}}$) is output.

Figure 7-9 illustrates operation in single address mode (when sequential mode is specified).

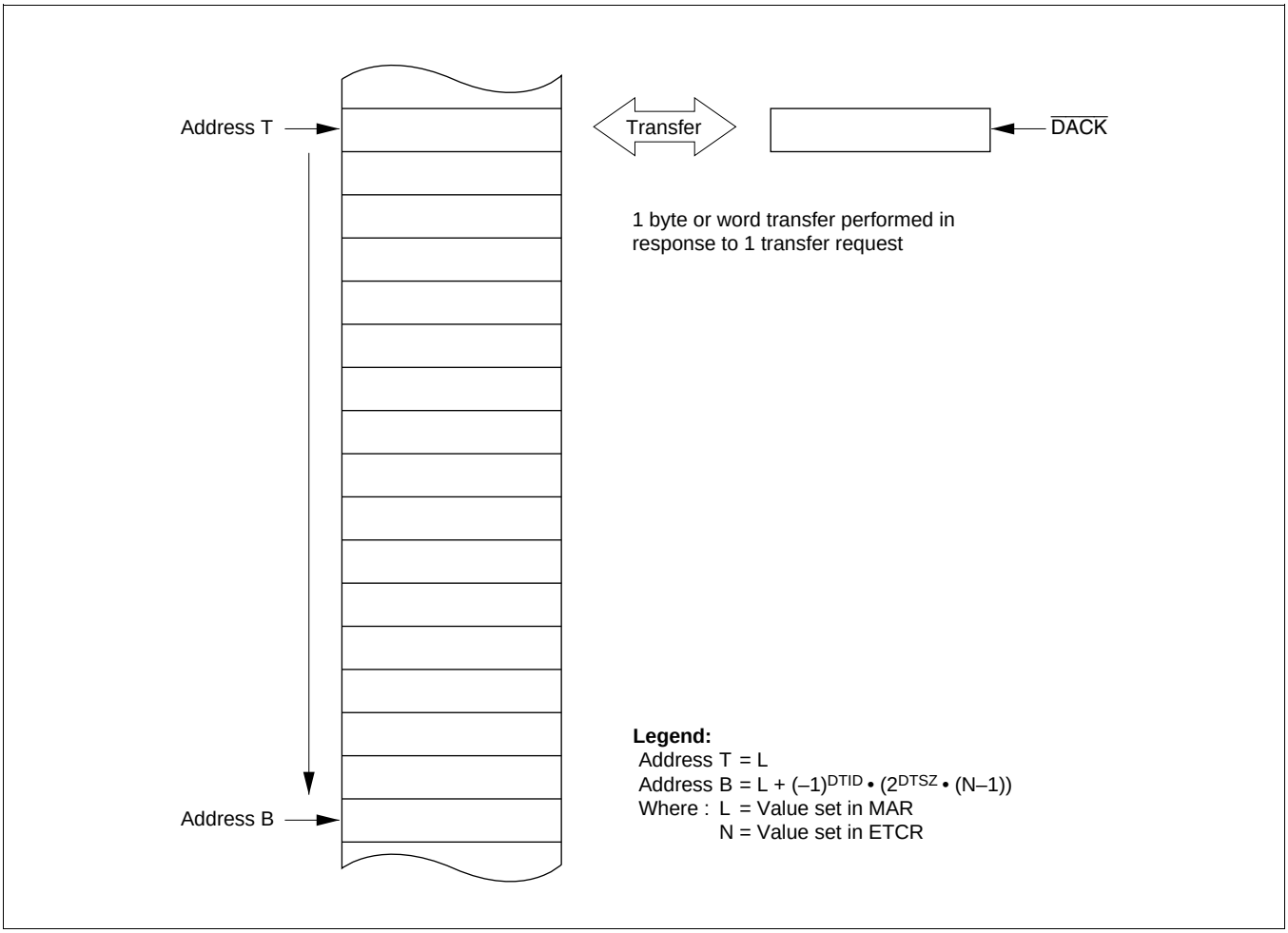

Figure 7-9 Operation in Single Address Mode (When Sequential Mode Is Specified)

Figure 7-10 shows an example of the setting procedure for single address mode (when sequential mode is specified).

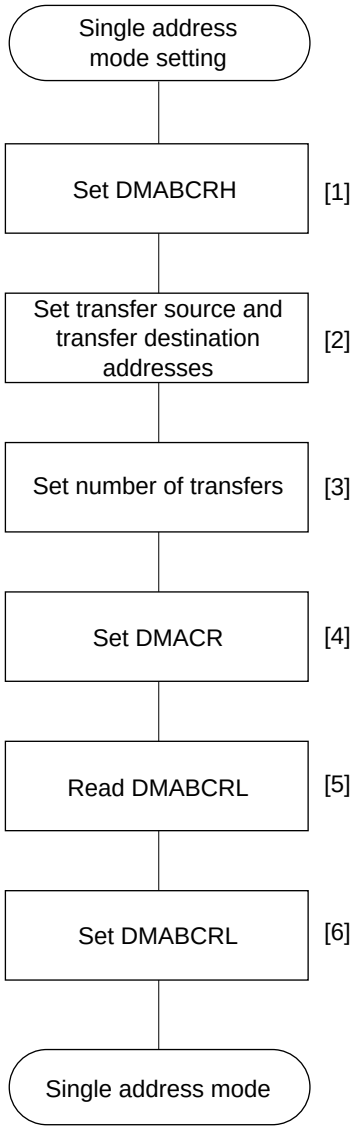

[1] Set each bit in DMABCRH.
- Clear the FAE bit to 0 to select short address mode.
- Set the SAE bit to 1 to select single address mode.
- Specify enabling or disabling of internal interrupt clearing with the DTA bit.

[2] Set the transfer source address/transfer destination address in MAR.

[3] Set the number of transfers in ETCR.

[4] Set each bit in DMACR.
- Set the transfer data size with the DTSZ bit.
- Specify whether MAR is to be incremented or decremented with the DTID bit.
- Clear the RPE bit to 0 to select sequential mode.
- Specify the transfer direction with the DTDIR bit.
- Select the activation source with bits DTF3 to DTF0.

[5] Read the DTE bit in DMABCRL as 0.

[6] Set each bit in DMABCRL.
- Specify enabling or disabling of transfer end interrupts with the DTIE bit.
- Set the DTE bit to 1 to enable transfer.

Figure 7-10 Example of Single Address Mode Setting Procedure (When Sequential Mode Is Specified)

7.5.6 Normal Mode

In normal mode, transfer is performed with channels A and B used in combination. Normal mode can be specified by setting the FAE bit in DMABCR to 1 and clearing the BLKE bit in DMACRA to 0.

In normal mode, MAR is updated after each byte or word transfer in response to a single transfer request, and this is executed the number of times specified in ETCRA. The transfer source is specified by MARA, and the transfer destination by MARB.

Table 7-10 summarizes register functions in normal mode.

Table 7-10 Register Functions in Normal Mode

Register	Function	Initial Setting	Operation
23 0 MARA	Source address register	Start address of transfer source	Incremented/decremented every transfer, or fixed
23 0 MARB	Destination address register	Start address of transfer destination	Incremented/decremented every transfer, or fixed
15 0 ETCRA	Transfer counter	Number of transfers	Decremented every transfer; transfer ends when count reaches H'0000

Legend:
MARA: Memory address register A
MARB: Memory address register B
ETCRA: Transfer count register A

MARA and MARB specify the start addresses of the transfer source and transfer destination, respectively, as 24 bits. MAR can be incremented or decremented by 1 or 2 each time a byte or word is transferred, or can be fixed.

Incrementing, decrementing, or holding a fixed value can be set separately for MARA and MARB.

The number of transfers is specified by ETCRA as 16 bits. ETCRA is decremented each time a transfer is performed, and when its value reaches H'0000 the DTE bit is cleared and transfer ends. If the DTIE bit is set to 1 at this time, an interrupt request is sent to the CPU or DTC.

The maximum number of transfers, when H'0000 is set in ETCRA, is 65,536.

Figure 7-11 illustrates operation in normal mode.

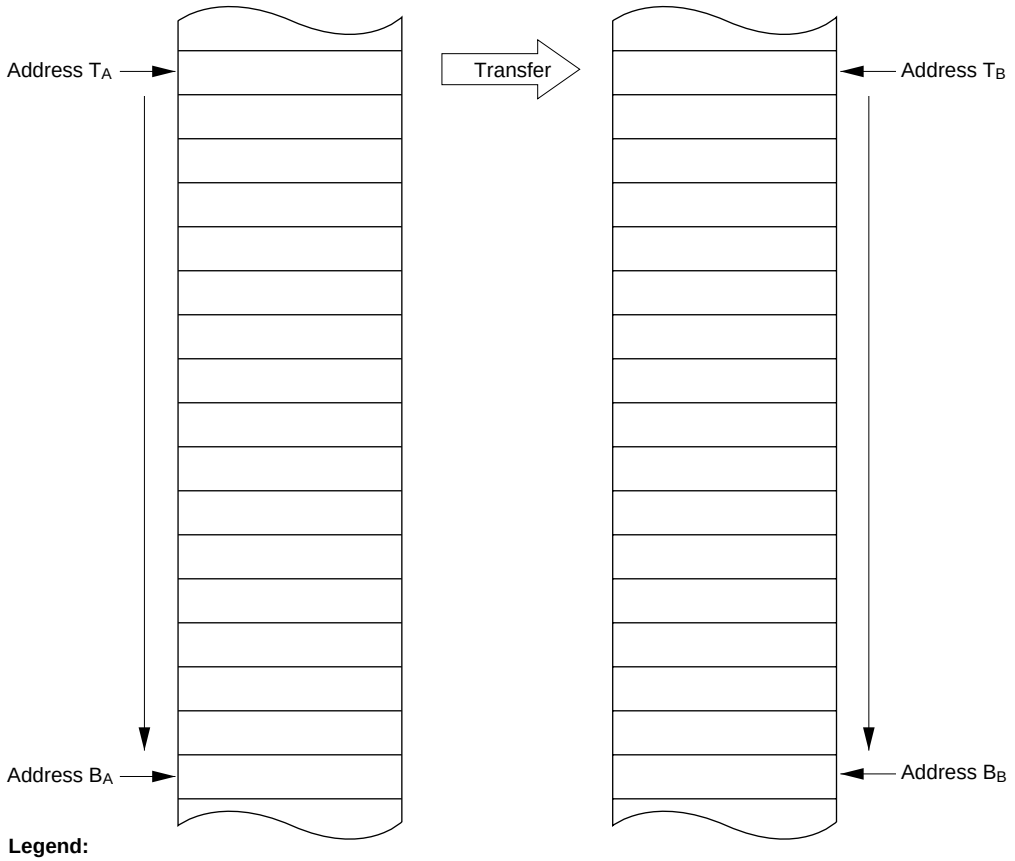

Legend:
Address $T_A = L_A$
Address $T_B = L_B$
Address $B_A = L_A + SAIDE \cdot (-1)^{SAID} \cdot (2^{DTSZ} \cdot (N-1))$
Address $B_B = L_B + DAIDE \cdot (-1)^{DAID} \cdot (2^{DTSZ} \cdot (N-1))$
Where : L_A = Value set in MARA
L_B = Value set in MARB
N = Value set in ETCRA

Figure 7-11 Operation in Normal Mode

Transfer requests (activation sources) are external requests and auto-requests.

With auto-request, the DMAC is only activated by register setting, and the specified number of transfers are performed automatically. With auto-request, cycle steal mode or burst mode can be selected. In cycle steal mode, the bus is released to another bus master each time a transfer is performed. In burst mode, the bus is held continuously until transfer ends.

For setting details, see section 7.3.4, DMA Controller Register (DMACR).

Figure 7-12 shows an example of the setting procedure for normal mode.

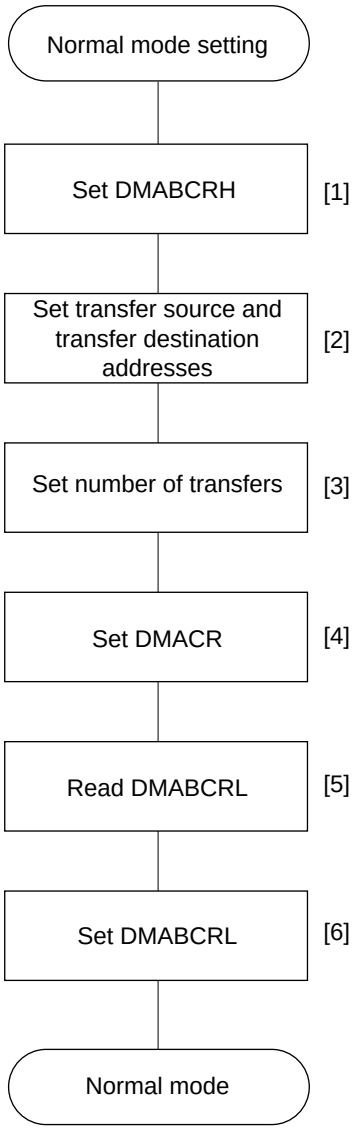

[1] Set each bit in DMABCRH.
- Set the FAE bit to 1 to select full address mode.
- Specify enabling or disabling of internal interrupt clearing with the DTA bit.

[2] Set the transfer source address in MARA, and the transfer destination address in MARB.

[3] Set the number of transfers in ETCRA.

[4] Set each bit in DMACRA and DMACRB.
- Set the transfer data size with the DTSZ bit.
- Specify whether MARA is to be incremented, decremented, or fixed, with the SAID and SAIDE bits.
- Clear the BLKE bit to 0 to select normal mode.
- Specify whether MARB is to be incremented, decremented, or fixed, with the DAID and DAIDE bits.
- Select the activation source with bits DTF3 to DTF0.

[5] Read DTE = 0 and DTME = 0 in DMABCRL.

[6] Set each bit in DMABCRL.
- Specify enabling or disabling of transfer end interrupts with the DTIE bit.
- Set both the DTME bit and the DTE bit to 1 to enable transfer.

Figure 7-12 Example of Normal Mode Setting Procedure

7.5.7 Block Transfer Mode

In block transfer mode, transfer is performed with channels A and B used in combination. Block transfer mode can be specified by setting the FAE bit in DMABCR and the BLKE bit in DMACRA to 1.

In block transfer mode, a transfer of the specified block size is carried out in response to a single transfer request, and this is executed the specified number of times. The transfer source is specified by MARA, and the transfer destination by MARB. Either the transfer source or the transfer destination can be selected as a block area (an area composed of a number of bytes or words).

Table 7-11 summarizes register functions in block transfer mode.

Table 7-11 Register Functions in Block Transfer Mode

Register	Function	Initial Setting	Operation
23 … 0 MARA	Source address register	Start address of transfer source	Incremented/decremented every transfer, or fixed
23 … 0 MARB	Destination address register	Start address of transfer destination	Incremented/decremented every transfer, or fixed
7 … 0 ETCRAH	Holds block size	Block size	Fixed
7 … 0 ETCRAL	Block size counter	Block size	Decremented every transfer; ETCRH value copied when count reaches H'00
15 … 0 ETCRB	Block transfer counter	Number of block transfers	Decremented every block transfer; transfer ends when count reaches H'0000

Legend:
MARA: Memory address register A
MARB: Memory address register B
ETCRA: Transfer count register A
ETCRB: Transfer count register B

MARA and MARB specify the start addresses of the transfer source and transfer destination, respectively, as 24 bits. MAR can be incremented or decremented by 1 or 2 each time a byte or word is transferred, or can be fixed.

Incrementing, decrementing, or holding a fixed value can be set separately for MARA and MARB.

Whether a block is to be designated for MARA or for MARB is specified by the BLKDIR bit in DMACRA.

To specify the number of transfers, if M is the size of one block (where M = 1 to 256) and N transfers are to be performed (where N = 1 to 65,536), M is set in both ETCRAH and ETCRAL, and N in ETCRB.

Figure 7-13 illustrates operation in block transfer mode when MARB is designated as a block area.

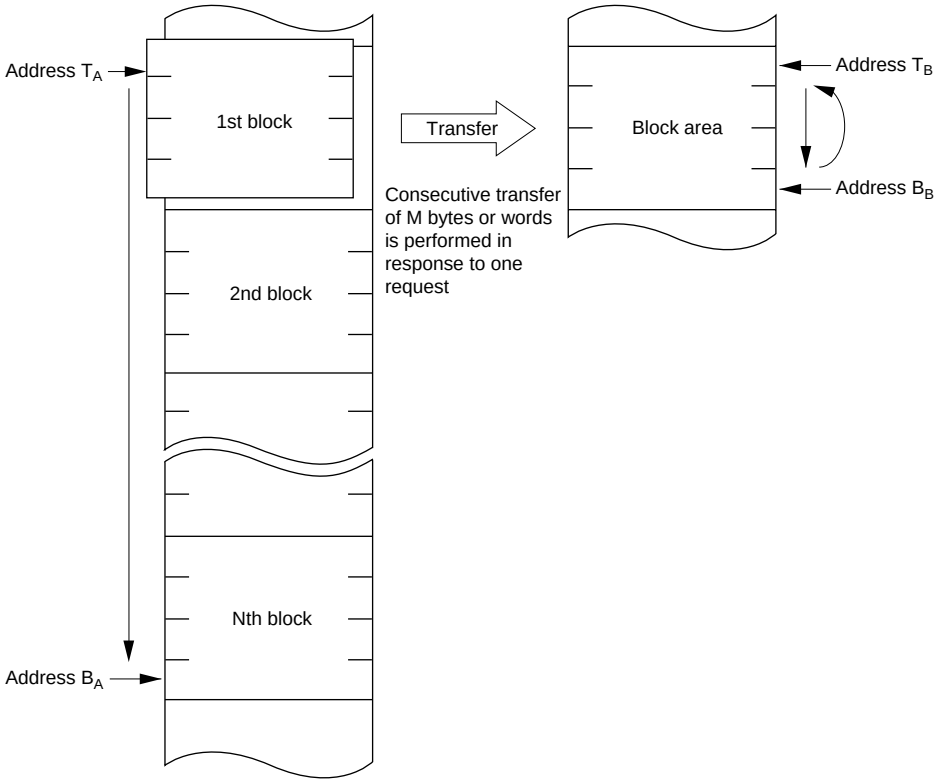

Legend:
Address T_A = L_A
Address T_B = L_B
Address B_A = L_A + SAIDE • $(-1)^{SAID}$ • $(2^{DTSZ}$ • (M•N–1))
Address B_B = L_B + DAIDE • $(-1)^{DAID}$ • $(2^{DTSZ}$ • (N–1))
Where : L_A = Value set in MARA
L_B = Value set in MARB
N = Value set in ETCRB
M = Value set in ETCRAH and ETCRAL

Figure 7-13 Operation in Block Transfer Mode (BLKDIR = 0)

Figure 7-14 illustrates operation in block transfer mode when MARA is designated as a block area.

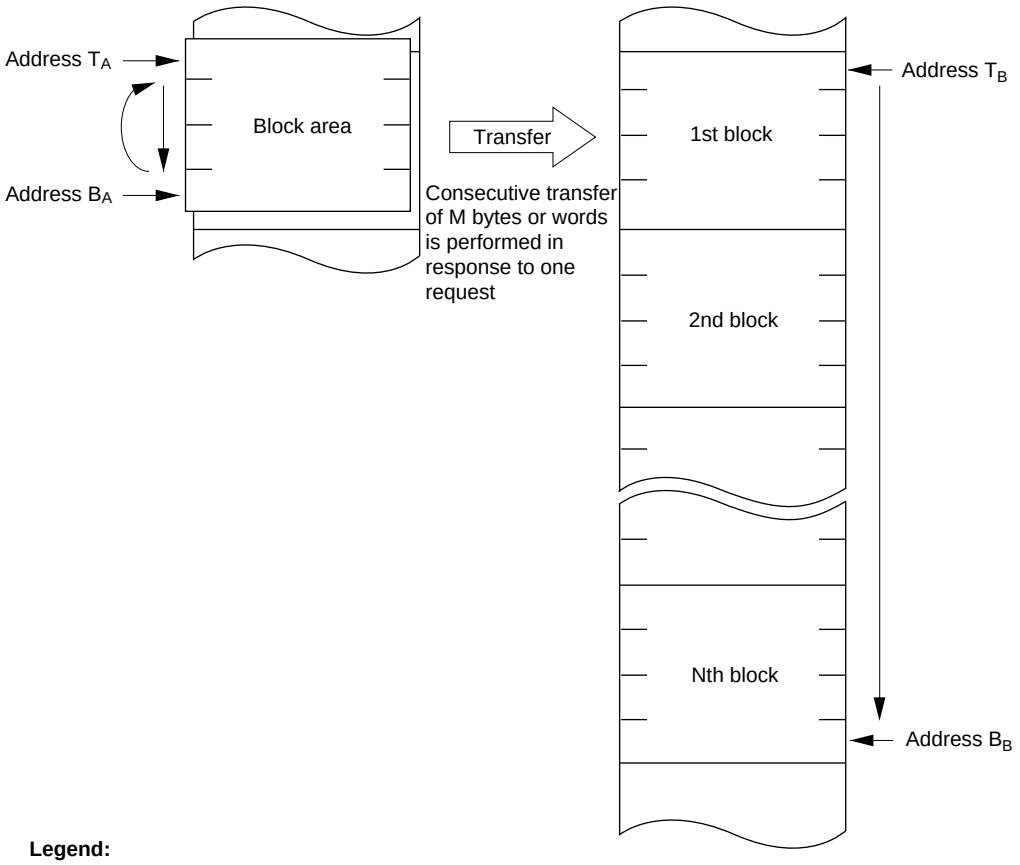

Legend:
Address $T_A = L_A$
Address $T_B = L_B$
Address $B_A = L_A + SAIDE \cdot (-1)^{SAID} \cdot (2^{DTSZ} \cdot (N-1))$
Address $B_B = L_B + DAIDE \cdot (-1)^{DAID} \cdot (2^{DTSZ} \cdot (M \cdot N-1))$
Where : L_A = Value set in MARA
L_B = Value set in MARB
N = Value set in ETCRB
M = Value set in ETCRAH and ETCRAL

Figure 7-14 Operation in Block Transfer Mode (BLKDIR = 1)

ETCRAL is decremented by 1 each time a byte or word transfer is performed. In response to a single transfer request, burst transfer is performed until the value in ETCRAL reaches H'00. ETCRAL is then loaded with the value in ETCRAH. At this time, the value in the MAR register for which a block designation has been given by the BLKDIR bit in DMACRA is restored in accordance with the DTSZ, SAID/DAID, and SAIDE/DAIDE bits in DMACR.

ETCRB is decremented by 1 every block transfer, and when the count reaches H'0000 the DTE bit is cleared and transfer ends. If the DTIE bit is set to 1 at this point, an interrupt request is sent to the CPU or DTC.

Figure 7-15 shows the operation flow in block transfer mode.

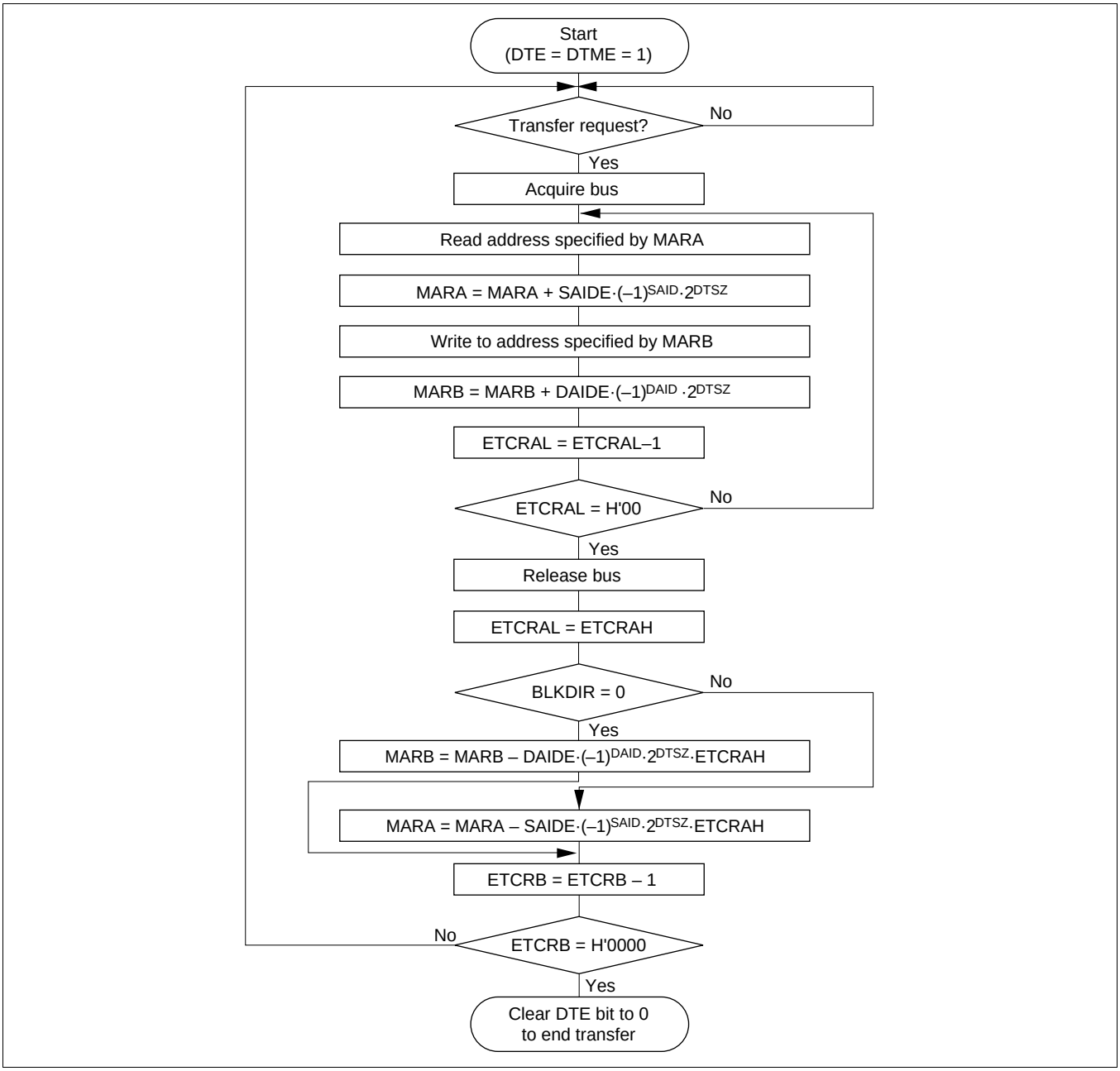

Figure 7-15 Operation Flow in Block Transfer Mode

Transfer requests (activation sources) consist of A/D converter conversion end interrupts, external requests, SCI transmission data empty and reception data full interrupts, and TPU channel 0 to 5 compare match/input capture A interrupts.

For details, see section 7.3.4, DMA Control Register (DMACR).

Figure 7-16 shows an example of the setting procedure for block transfer mode.

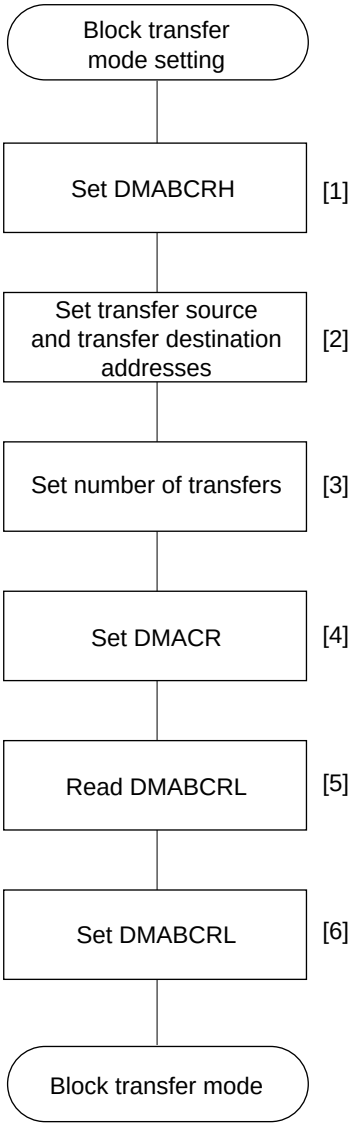

[1] Set each bit in DMABCRH.
- Set the FAE bit to 1 to select full address mode.
- Specify enabling or disabling of internal interrupt clearing with the DTA bit.

[2] Set the transfer source address in MARA, and the transfer destination address in MARB.

[3] Set the block size in both ETCRAH and ETCRAL. Set the number of transfers in ETCRB.

[4] Set each bit in DMACRA and DMACRB.
- Set the transfer data size with the DTSZ bit.
- Specify whether MARA is to be incremented, decremented, or fixed, with the SAID and SAIDE bits.
- Set the BLKE bit to 1 to select block transfer mode.
- Specify whether the transfer source or the transfer destination is a block area with the BLKDIR bit.
- Specify whether MARB is to be incremented, decremented, or fixed, with the DAID and DAIDE bits.
- Select the activation source with bits DTF3 to DTF0.

[5] Read DTE = 0 and DTME = 0 in DMABCRL.

[6] Set each bit in DMABCRL.
- Specify enabling or disabling of transfer end interrupts to the CPU with the DTIE bit.
- Set both the DTME bit and the DTE bit to 1 to enable transfer.

Figure 7-16 Example of Block Transfer Mode Setting Procedure

7.5.8 DMAC Activation Sources

DMAC activation sources consist of internal interrupts, external requests, and auto-requests. The activation sources that can be specified depend on the transfer mode and the channel, as shown in table 7-12.

Table 7-12 DMAC Activation Sources

		Short Address Mode		Full Address Mode	
Activation Source		**Channels 0A and 1A**	**Channels 0B and 1B**	**Normal Mode**	**Block Transfer Mode**
Internal Interrupts	ADI	○	○	×	○
	TXI0	○	○	×	○
	RXI0	○	○	×	○
	TXI1	○	○	×	○
	RXI1	○	○	×	○
	TGI0A	○	○	×	○
	TGI1A	○	○	×	○
	TGI2A	○	○	×	○
	TGI3A	○	○	×	○
	TGI4A	○	○	×	○
	TGI5A	○	○	×	○
External Requests	$\overline{\text{DREQ}}$ pin falling edge input	×	○	○	○
	$\overline{\text{DREQ}}$ pin low-level input	×	○	○	○
Auto-request		×	×	○	×

Legend:
○: Can be specified
× : Cannot be specified

Activation by Internal Interrupt: An interrupt request selected as a DMAC activation source can be sent simultaneously to the CPU and DTC. For details, see section 5, Interrupt Controller.

With activation by an internal interrupt, the DMAC accepts the request independently of the interrupt controller. Consequently, interrupt controller priority settings are not accepted.

If the DMAC is activated by a CPU interrupt source or an interrupt source that is not used as a DTC activation source (DTA = 1), the interrupt source flag is cleared automatically by the DMA transfer. With ADI, TXI, and RXI interrupts, however, the interrupt source flag is not cleared unless the prescribed register is accessed in a DMA transfer. If the same interrupt is used as an activation source for more than one channel, the interrupt request flag is cleared when the highest-priority channel is activated first. Transfer requests for other channels are held pending in the DMAC, and activation is carried out in order of priority.

When DTE = 0, such as after completion of a transfer, a request from the selected activation source is not sent to the DMAC, regardless of the DTA bit. In this case, the relevant interrupt request is sent to the CPU or DTC.

In case of overlap with a CPU interrupt source or DTC activation source (DTA = 0), the interrupt request flag is not cleared by the DMAC.

Activation by External Request: If an external request ($\overline{\text{DREQ}}$ pin) is specified as an activation source, the relevant port should be set to input mode in advance.

Level sensing or edge sensing can be used for external requests.

External request operation in normal mode (short address mode or full address mode) is described below.

When edge sensing is selected, a 1-byte or 1-word transfer is executed each time a high-to-low transition is detected on the $\overline{\text{DREQ}}$ pin. The next transfer may not be performed if the next edge is input before transfer is completed.

When level sensing is selected, the DMAC stands by for a transfer request while the $\overline{\text{DREQ}}$ pin is held high. While the $\overline{\text{DREQ}}$ pin is held low, transfers continue in succession, with the bus being released each time a byte or word is transferred. If the $\overline{\text{DREQ}}$ pin goes high in the middle of a transfer, the transfer is interrupted and the DMAC stands by for a transfer request.

Activation by Auto-Request: Auto-request activation is performed by register setting only, and transfer continues to the end.

With auto-request activation, cycle steal mode or burst mode can be selected.

In cycle steal mode, the DMAC releases the bus to another bus master each time a byte or word is transferred. DMA and CPU cycles usually alternate.

In burst mode, the DMAC keeps possession of the bus until the end of the transfer, and transfer is performed continuously.

Single Address Mode: The DMAC can operate in dual address mode in which read cycles and write cycles are separate cycles, or single address mode in which read and write cycles are executed in parallel.

In dual address mode, transfer is performed with the source address and destination address specified separately.

In single address mode, on the other hand, transfer is performed between external space in which either the transfer source or the transfer destination is specified by an address, and an external device for which selection is performed by means of the $\overline{\text{DACK}}$ strobe, without regard to the address. Figure 7-17 shows the data bus in single address mode.

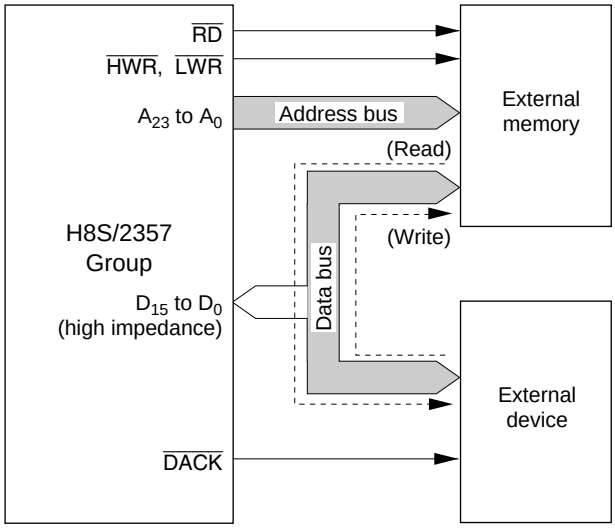

Figure 7-17 Data Bus in Single Address Mode

When using the DMAC for single address mode reading, transfer is performed from external memory to the external device, and the $\overline{\text{DACK}}$ pin functions as a write strobe for the external device. When using the DMAC for single address mode writing, transfer is performed from the external device to external memory, and the $\overline{\text{DACK}}$ pin functions as a read strobe for the external device. Since there is no directional control for the external device, one or other of the above single directions should be used.

Bus cycles in single address mode are in accordance with the settings of the bus controller for the external memory area. On the external device side, $\overline{\text{DACK}}$ is output in synchronization with the address strobe. For details of bus cycles, see section 7.5.11, DMAC Bus Cycles (Single Address Mode).

Do not specify internal space for transfer addresses in single address mode.

7.5.9 Basic DMAC Bus Cycles

An example of the basic DMAC bus cycle timing is shown in figure 7-18. In this example, word-size transfer is performed from 16-bit, 2-state access space to 8-bit, 3-state access space. When the bus is transferred from the CPU to the DMAC, a source address read and destination address write are performed. The bus is not released in response to another bus request, etc., between these read and write operations. As with CPU cycles, DMA cycles conform to the bus controller settings.

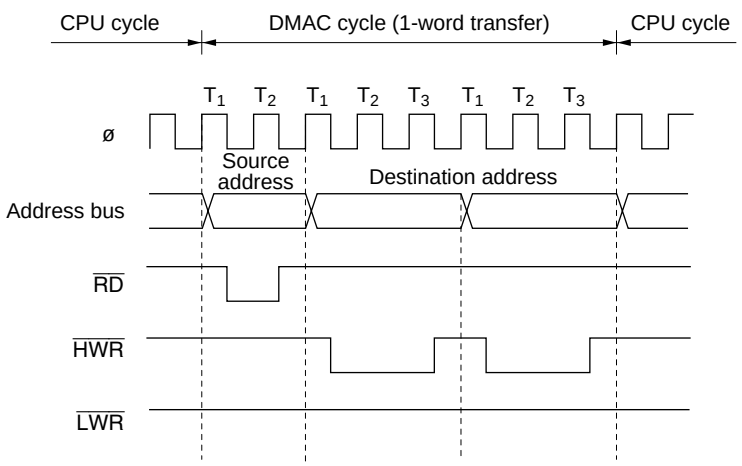

Figure 7-18 Example of DMA Transfer Bus Timing

The address is not output to the external address bus in an access to on-chip memory or an internal I/O register.

7.5.10 DMAC Bus Cycles (Dual Address Mode)

Short Address Mode: Figure 7-19 shows a transfer example in which $\overline{\text{TEND}}$ output is enabled and byte-size short address mode transfer (sequential/idle/repeat mode) is performed from external 8-bit, 2-state access space to internal I/O space.

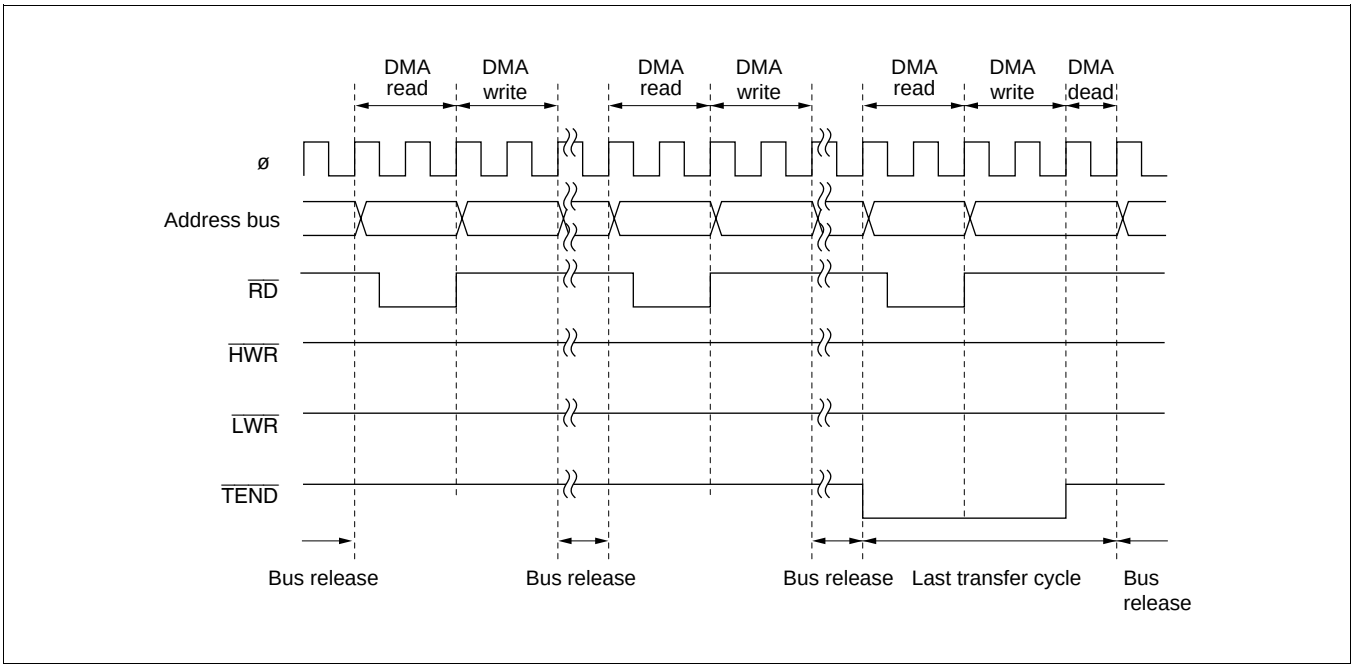

Figure 7-19 Example of Short Address Mode Transfer

A one-byte or one-word transfer is performed for one transfer request, and after the transfer the bus is released. While the bus is released one or more bus cycles are inserted by the CPU or DTC.

In the transfer end cycle (the cycle in which the transfer counter reaches 0), a one-state DMA dead cycle is inserted after the DMA write cycle.

In repeat mode, when $\overline{\text{TEND}}$ output is enabled, $\overline{\text{TEND}}$ output goes low in the transfer cycle in which the transfer counter reaches 0.

Full Address Mode (Cycle Steal Mode): Figure 7-20 shows a transfer example in which $\overline{\text{TEND}}$ output is enabled and word-size full address mode transfer (cycle steal mode) is performed from external 16-bit, 2-state access space to external 16-bit, 2-state access space.

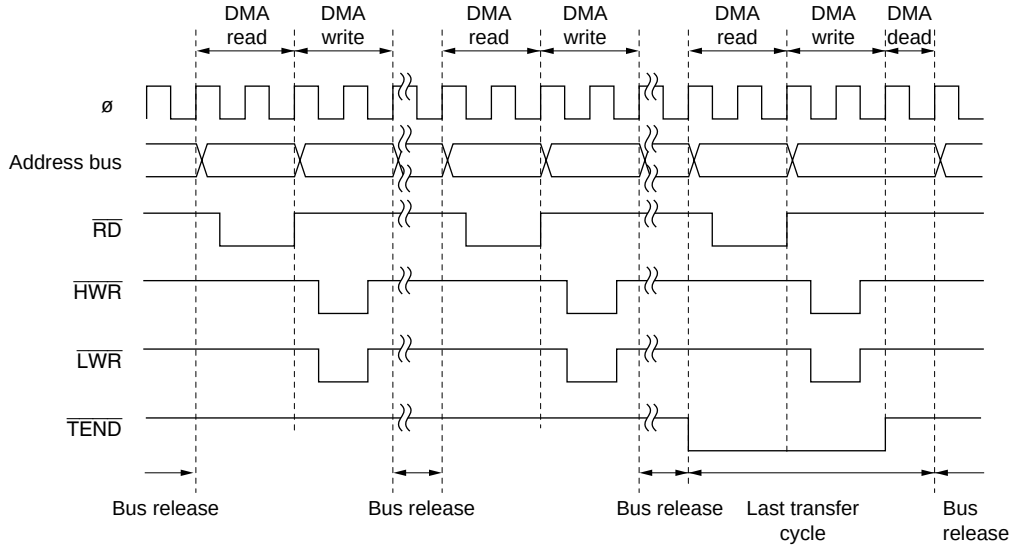

Figure 7-20 Example of Full Address Mode (Cycle Steal) Transfer

A one-byte or one-word transfer is performed, and after the transfer the bus is released. While the bus is released one bus cycle is inserted by the CPU or DTC.

In the transfer end cycle (the cycle in which the transfer counter reaches 0), a one-state DMA dead cycle is inserted after the DMA write cycle.

Full Address Mode (Burst Mode): Figure 7-21 shows a transfer example in which $\overline{\text{TEND}}$ output is enabled and word-size full address mode transfer (burst mode) is performed from external 16-bit, 2-state access space to external 16-bit, 2-state access space.

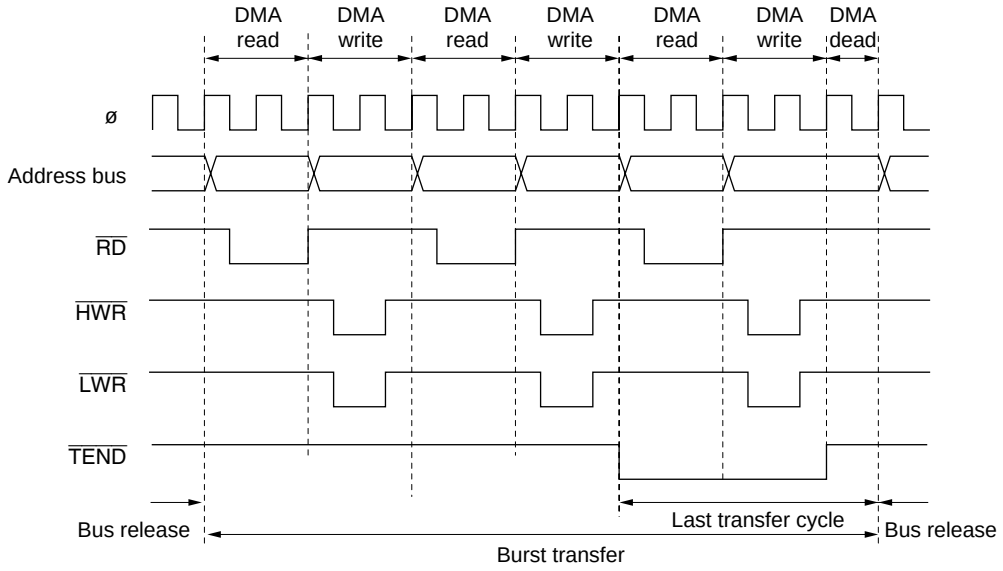

Figure 7-21 Example of Full Address Mode (Burst Mode) Transfer

In burst mode, one-byte or one-word transfers are executed consecutively until transfer ends.

In the transfer end cycle (the cycle in which the transfer counter reaches 0), a one-state DMA dead cycle is inserted after the DMA write cycle.

If a request from another higher-priority channel is generated after burst transfer starts, that channel has to wait until the burst transfer ends.

If an NMI is generated while a channel designated for burst transfer is in the transfer enabled state, the DTME bit is cleared and the channel is placed in the transfer disabled state. If burst transfer has already been activated inside the DMAC, the bus is released on completion of a one-byte or one-word transfer within the burst transfer, and burst transfer is suspended. If the last transfer cycle of the burst transfer has already been activated inside the DMAC, execution continues to the end of the transfer even if the DTME bit is cleared.

Full Address Mode (Block Transfer Mode): Figure 7-22 shows a transfer example in which $\overline{\text{TEND}}$ output is enabled and word-size full address mode transfer (block transfer mode) is performed from internal 16-bit, 1-state access space to external 16-bit, 2-state access space.

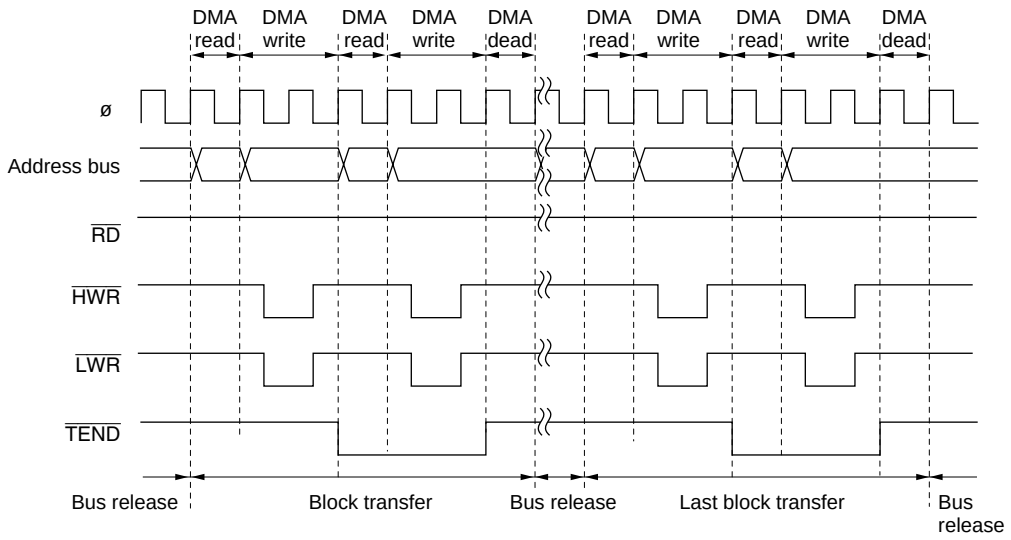

Figure 7-22 Example of Full Address Mode (Block Transfer Mode) Transfer

A one-block transfer is performed for one transfer request, and after the transfer the bus is released. While the bus is released, one or more bus cycles are inserted by the CPU or DTC.

In the transfer end cycle of each block (the cycle in which the transfer counter reaches 0), a one-state DMA dead cycle is inserted after the DMA write cycle.

One block is transmitted without interruption. NMI generation does not affect block transfer operation.

$\overline{\text{DREQ}}$ Pin Falling Edge Activation Timing: Set the DTA bit for the channel for which the $\overline{\text{DREQ}}$ pin is selected to 1.

Figure 7-23 shows an example of $\overline{\text{DREQ}}$ pin falling edge activated normal mode transfer.

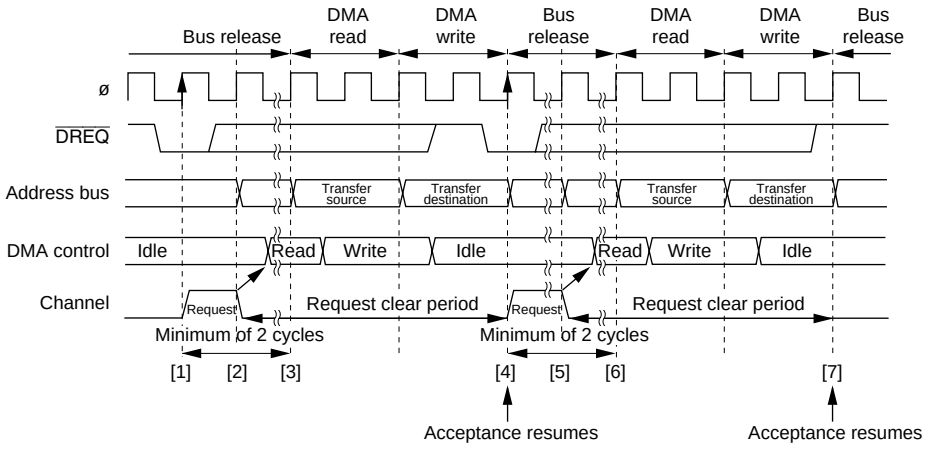

[1] Acceptance after transfer enabling; the $\overline{\text{DREQ}}$ pin low level is sampled on the rising edge of ø, and the request is held.
[2] [5] The request is cleared at the next bus break, and activation is started in the DMAC.
[3] [6] Start of DMA cycle; $\overline{\text{DREQ}}$ pin high level sampling on the rising edge of ø starts.
[4] [7] When the $\overline{\text{DREQ}}$ pin high level has been sampled, acceptance is resumed after the write cycle is completed.
(As in [1], the $\overline{\text{DREQ}}$ pin low level is sampled on the rising edge of ø, and the request is held.)

Note: In write data buffer mode, bus breaks from [2] to [7] may be hidden, and not visible.

Figure 7-23 Example of $\overline{\text{DREQ}}$ Pin Falling Edge Activated Normal Mode Transfer

$\overline{\text{DREQ}}$ pin sampling is performed every cycle, with the rising edge of the next ø cycle after the end of the DMABCR write cycle for setting the transfer enabled state as the starting point.

When the $\overline{\text{DREQ}}$ pin low level is sampled while acceptance by means of the $\overline{\text{DREQ}}$ pin is possible, the request is held in the DMAC. Then, when activation is initiated in the DMAC, the request is cleared, and $\overline{\text{DREQ}}$ pin high level sampling for edge detection is started. If $\overline{\text{DREQ}}$ pin high level sampling has been completed by the time the DMA write cycle ends, acceptance resumes after the end of the write cycle, $\overline{\text{DREQ}}$ pin low level sampling is performed again, and this operation is repeated until the transfer ends.

Figure 7-24 shows an example of $\overline{\text{DREQ}}$ pin falling edge activated block transfer mode transfer.

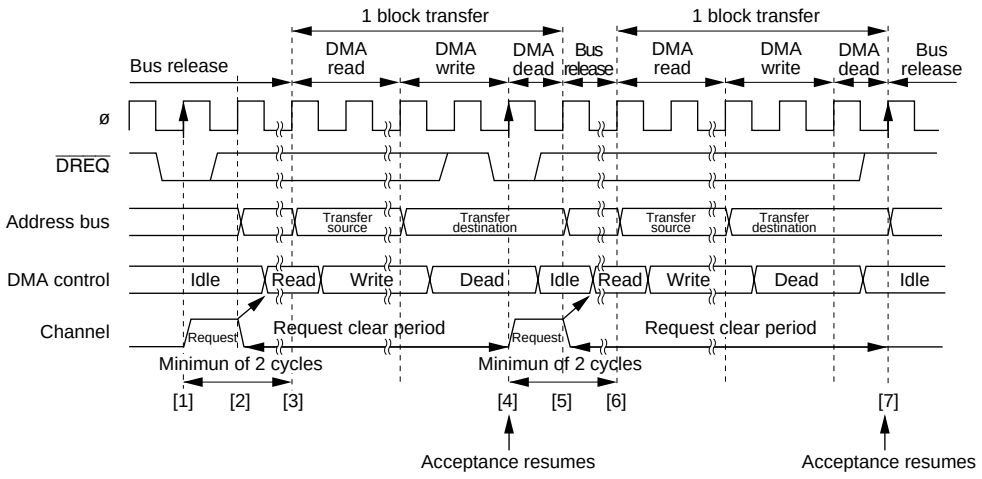

[1] Acceptance after transfer enabling; the $\overline{\text{DREQ}}$ pin low level is sampled on the rising edge of ø, and the request is held.

[2] [5] The request is cleared at the next bus break, and activation is started in the DMAC.

[3] [6] Start of DMA cycle; $\overline{\text{DREQ}}$ pin high level sampling on the rising edge of ø starts.

[4] [7] When the $\overline{\text{DREQ}}$ pin high level has been sampled, acceptance is resumed after the dead cycle is completed.
(As in [1], the $\overline{\text{DREQ}}$ pin low level is sampled on the rising edge of ø, and the request is held.)

Note: In write data buffer mode, bus breaks from [2] to [7] may be hidden, and not visible.

Figure 7-24 Example of $\overline{\text{DREQ}}$ Pin Falling Edge Activated Block Transfer Mode Transfer

$\overline{\text{DREQ}}$ pin sampling is performed every cycle, with the rising edge of the next ø cycle after the end of the DMABCR write cycle for setting the transfer enabled state as the starting point.

When the $\overline{\text{DREQ}}$ pin low level is sampled while acceptance by means of the $\overline{\text{DREQ}}$ pin is possible, the request is held in the DMAC. Then, when activation is initiated in the DMAC, the request is cleared, and $\overline{\text{DREQ}}$ pin high level sampling for edge detection is started. If $\overline{\text{DREQ}}$ pin high level sampling has been completed by the time the DMA dead cycle ends, acceptance resumes after the end of the dead cycle, $\overline{\text{DREQ}}$ pin low level sampling is performed again, and this operation is repeated until the transfer ends.

$\overline{\text{DREQ}}$ Level Activation Timing (Normal Mode): Set the DTA bit for the channel for which the $\overline{\text{DREQ}}$ pin is selected to 1.

Figure 7-25 shows an example of $\overline{\text{DREQ}}$ level activated normal mode transfer.

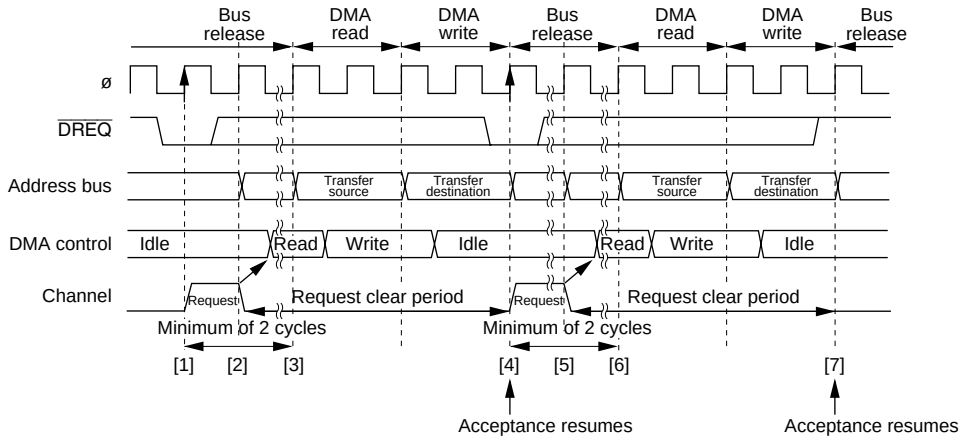

[1] Acceptance after transfer enabling; the $\overline{\text{DREQ}}$ pin low level is sampled on the rising edge of ø, and the request is held.
[2] [5] The request is cleared at the next bus break, and activation is started in the DMAC.
[3] [6] The DMA cycle is started.
[4] [7] Acceptance is resumed after the write cycle is completed.
(As in [1], the $\overline{\text{DREQ}}$ pin low level is sampled on the rising edge of ø, and the request is held.)

Note: In write data buffer mode, bus breaks from [2] to [7] may be hidden, and not visible.

Figure 7-25 Example of $\overline{\text{DREQ}}$ Level Activated Normal Mode Transfer

$\overline{\text{DREQ}}$ pin sampling is performed every cycle, with the rising edge of the next ø cycle after the end of the DMABCR write cycle for setting the transfer enabled state as the starting point.

When the $\overline{\text{DREQ}}$ pin low level is sampled while acceptance by means of the $\overline{\text{DREQ}}$ pin is possible, the request is held in the DMAC. Then, when activation is initiated in the DMAC, the request is cleared. After the end of the write cycle, acceptance resumes, $\overline{\text{DREQ}}$ pin low level sampling is performed again, and this operation is repeated until the transfer ends.

Figure 7-26 shows an example of $\overline{\text{DREQ}}$ level activated block transfer mode transfer.

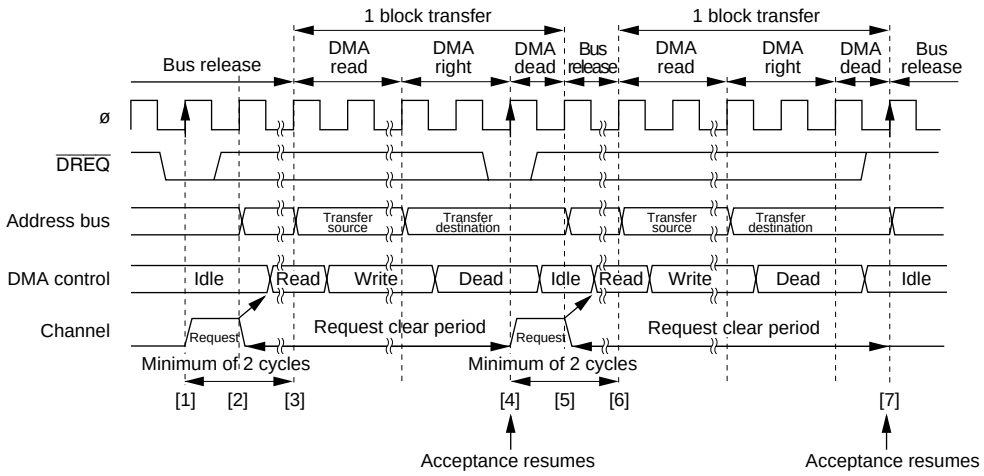

[1] Acceptance after transfer enabling; the $\overline{\text{DREQ}}$ pin low level is sampled on the rising edge of ø, and the request is held.
[2] [5] The request is cleared at the next bus break, and activation is started in the DMAC.
[3] [6] The DMA cycle is started.
[4] [7] Acceptance is resumed after the dead cycle is completed.
(As in [1], the $\overline{\text{DREQ}}$ pin low level is sampled on the rising edge of ø, and the request is held.)

Note: In write data buffer mode, bus breaks from [2] to [7] may be hidden, and not visible.

Figure 7-26 Example of $\overline{\text{DREQ}}$ Level Activated Block Transfer Mode Transfer

$\overline{\text{DREQ}}$ pin sampling is performed every cycle, with the rising edge of the next ø cycle after the end of the DMABCR write cycle for setting the transfer enabled state as the starting point.

When the $\overline{\text{DREQ}}$ pin low level is sampled while acceptance by means of the $\overline{\text{DREQ}}$ pin is possible, the request is held in the DMAC. Then, when activation is initiated in the DMAC, the request is cleared. After the end of the dead cycle, acceptance resumes, $\overline{\text{DREQ}}$ pin low level sampling is performed again, and this operation is repeated until the transfer ends.

7.5.11 DMAC Bus Cycles (Single Address Mode)

Single Address Mode (Read): Figure 7-27 shows a transfer example in which $\overline{\text{TEND}}$ output is enabled and byte-size single address mode transfer (read) is performed from external 8-bit, 2-state access space to an external device.

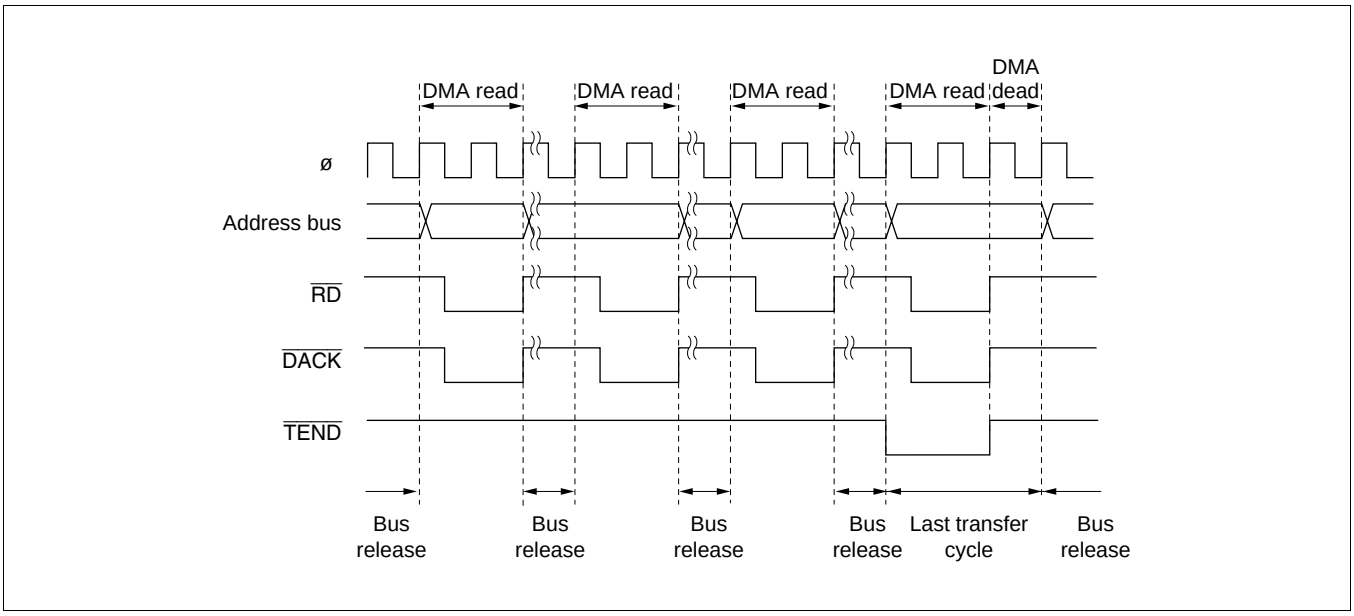

Figure 7-27 Example of Single Address Mode (Byte Read) Transfer

Figure 7-28 shows a transfer example in which $\overline{\text{TEND}}$ output is enabled and word-size single address mode transfer (read) is performed from external 8-bit, 2-state access space to an external device.

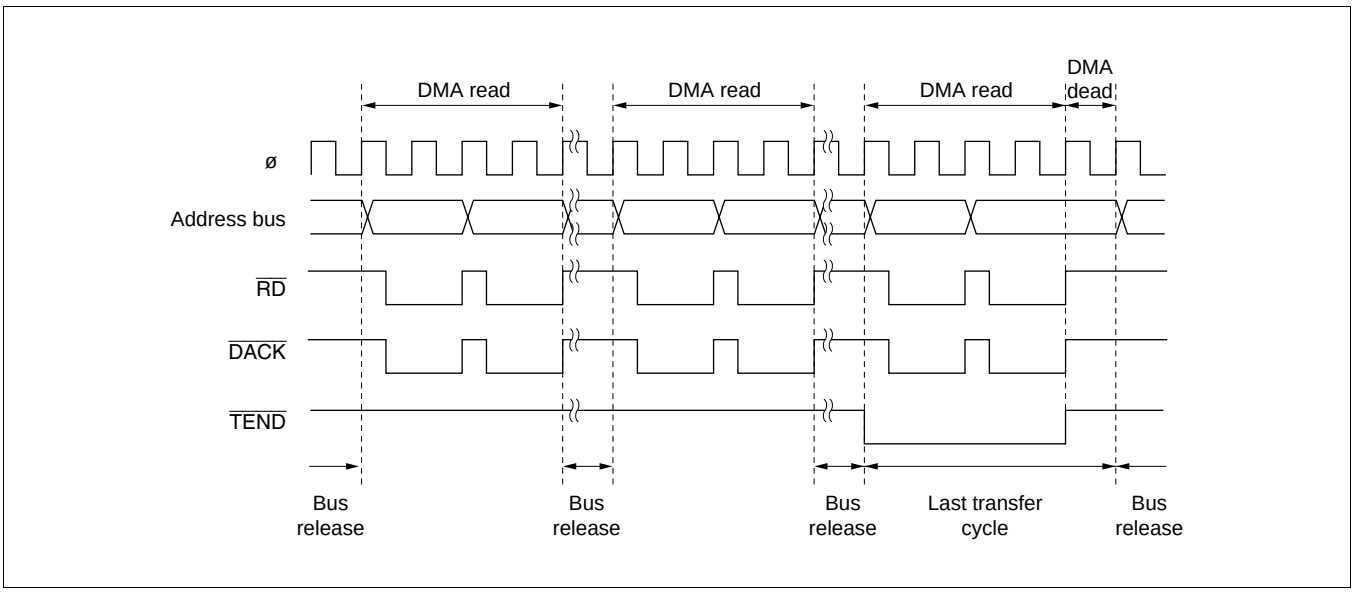

Figure 7-28 Example of Single Address Mode (Word Read) Transfer

A one-byte or one-word transfer is performed for one transfer request, and after the transfer the bus is released. While the bus is released, one or more bus cycles are inserted by the CPU or DTC.

In the transfer end cycle (the cycle in which the transfer counter reaches 0), a one-state DMA dead cycle is inserted after the DMA write cycle.

Single Address Mode (Write): Figure 7-29 shows a transfer example in which $\overline{\text{TEND}}$ output is enabled and byte-size single address mode transfer (write) is performed from an external device to external 8-bit, 2-state access space.

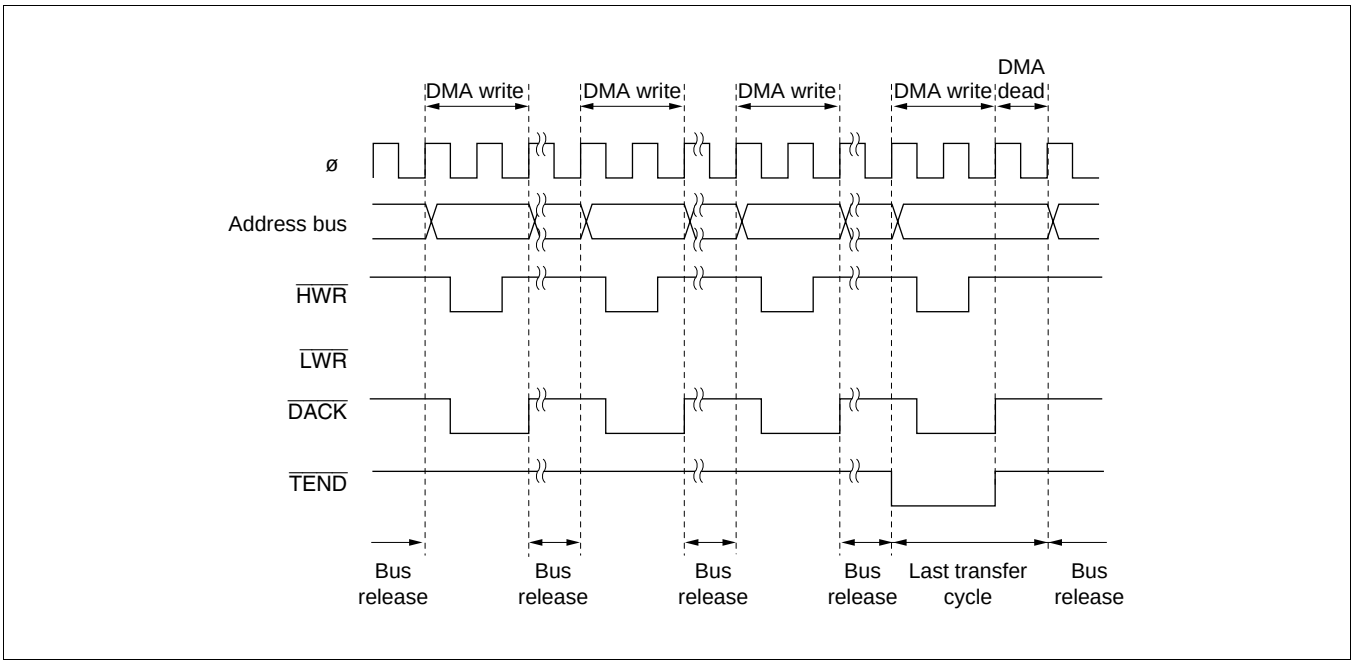

Figure 7-29 Example of Single Address Mode (Byte Write) Transfer

Figure 7-30 shows a transfer example in which $\overline{\text{TEND}}$ output is enabled and word-size single address mode transfer (write) is performed from an external device to external 8-bit, 2-state access space.

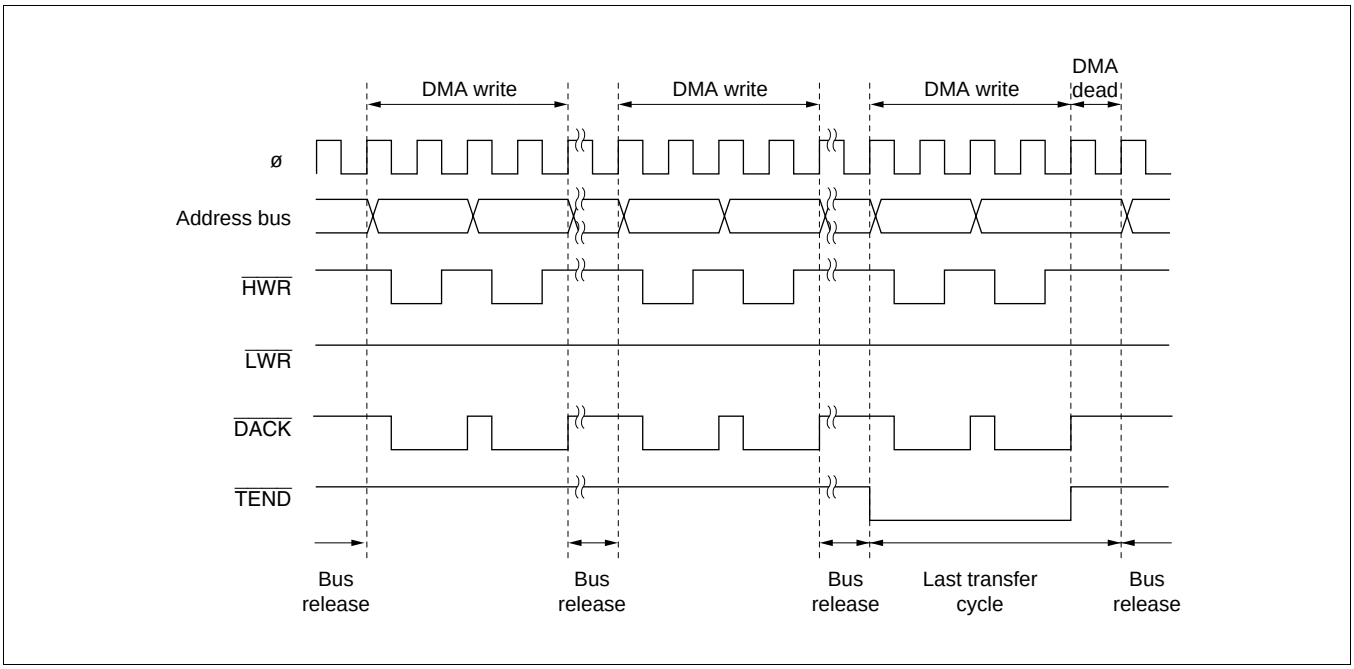

Figure 7-30 Example of Single Address Mode (Word Write) Transfer

A one-byte or one-word transfer is performed for one transfer request, and after the transfer the bus is released. While the bus is released one or more bus cycles are inserted by the CPU or DTC.

In the transfer end cycle (the cycle in which the transfer counter reaches 0), a one-state DMA dead cycle is inserted after the DMA write cycle.

$\overline{\text{DREQ}}$ Pin Falling Edge Activation Timing: Set the DTA bit for the channel for which the $\overline{\text{DREQ}}$ pin is selected to 1.

Figure 7-31 shows an example of $\overline{\text{DREQ}}$ pin falling edge activated single address mode transfer.

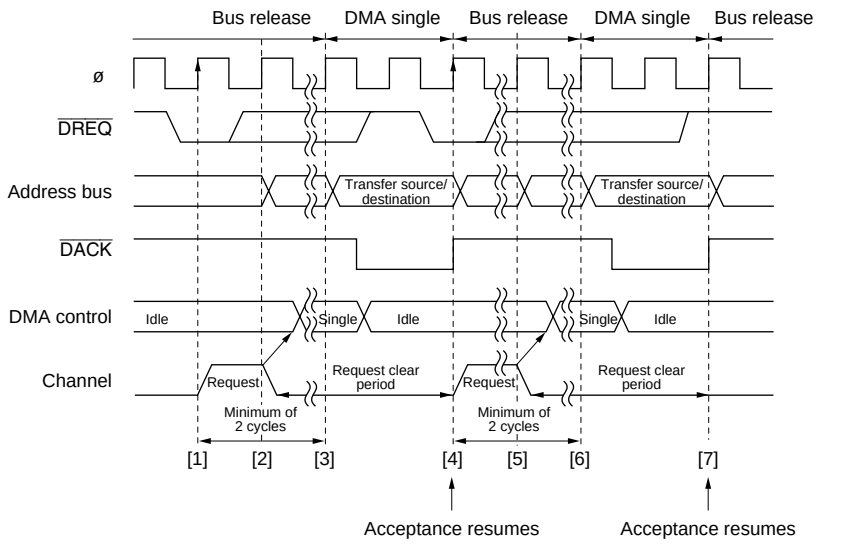

[1] Acceptance after transfer enabling; the $\overline{\text{DREQ}}$ pin low level is sampled on the rising edge of ø, and the request is held.
[2] [5] The request is cleared at the next bus break, and activation is started in the DMAC.
[3] [6] Start of DMA cycle; $\overline{\text{DREQ}}$ pin high level sampling on the rising edge of ø starts.
[4] [7] When the $\overline{\text{DREQ}}$ pin high level has been sampled, acceptance is resumed after the single cycle is completed.
(As in [1], the $\overline{\text{DREQ}}$ pin low level is sampled on the rising edge of ø, and the request is held.)

Note: In write data buffer mode, bus breaks from [2] to [7] may be hidden, and not visible.

Figure 7-31 Example of $\overline{\text{DREQ}}$ Pin Falling Edge Activated Single Address Mode Transfer

$\overline{\text{DREQ}}$ pin sampling is performed every cycle, with the rising edge of the next ø cycle after the end of the DMABCR write cycle for setting the transfer enabled state as the starting point.

When the $\overline{\text{DREQ}}$ pin low level is sampled while acceptance by means of the $\overline{\text{DREQ}}$ pin is possible, the request is held in the DMAC. Then, when activation is initiated in the DMAC, the request is cleared, and $\overline{\text{DREQ}}$ pin high level sampling for edge detection is started. If $\overline{\text{DREQ}}$ pin high level sampling has been completed by the time the DMA single cycle ends, acceptance resumes after the end of the single cycle, $\overline{\text{DREQ}}$ pin low level sampling is performed again, and this operation is repeated until the transfer ends.

$\overline{\text{DREQ}}$ Pin Low Level Activation Timing: Set the DTA bit for the channel for which the $\overline{\text{DREQ}}$ pin is selected to 1.

Figure 7-32 shows an example of $\overline{\text{DREQ}}$ pin low level activated single address mode transfer.

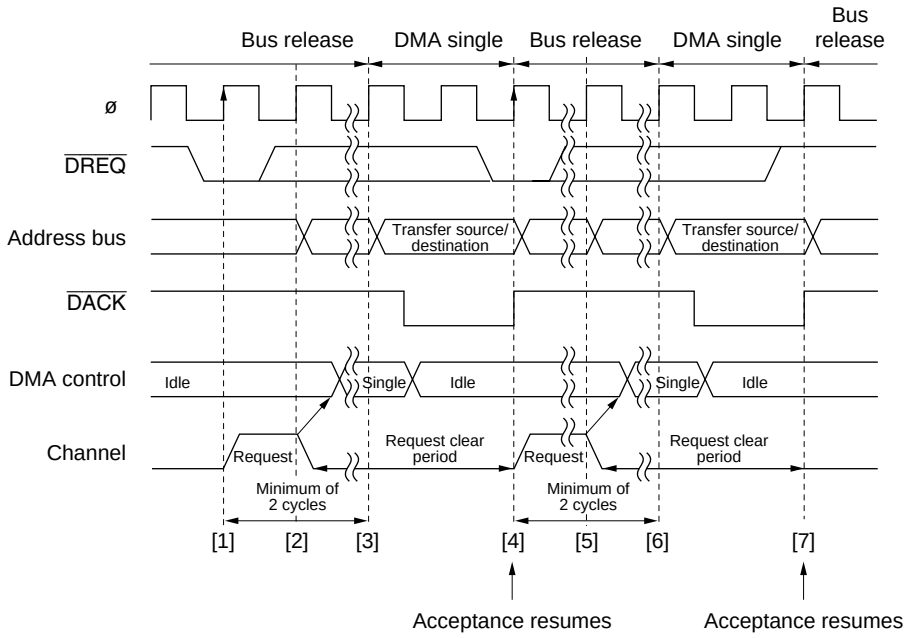

[1] Acceptance after transfer enabling; the $\overline{\text{DREQ}}$ pin low level is sampled on the rising edge of ø, and the request is held.
[2] [5] The request is cleared at the next bus break, and activation is started in the DMAC.
[3] [6] The DMAC cycle is started.
[4] [7] Acceptance is resumed after the single cycle is completed.
(As in [1], the $\overline{\text{DREQ}}$ pin low level is sampled on the rising edge of ø, and the request is held.)

Note: In write data buffer mode, bus breaks from [2] to [7] may be hidden, and not visible.

Figure 7-32 Example of $\overline{\text{DREQ}}$ Pin Low Level Activated Single Address Mode Transfer

$\overline{\text{DREQ}}$ pin sampling is performed every cycle, with the rising edge of the next ø cycle after the end of the DMABCR write cycle for setting the transfer enabled state as the starting point.

When the $\overline{\text{DREQ}}$ pin low level is sampled while acceptance by means of the $\overline{\text{DREQ}}$ pin is possible, the request is held in the DMAC. Then, when activation is initiated in the DMAC, the request is cleared. After the end of the single cycle, acceptance resumes, $\overline{\text{DREQ}}$ pin low level sampling is performed again, and this operation is repeated until the transfer ends.

7.5.12 Write Data Buffer Function

DMAC internal-to-external dual address transfers and single address transfers can be executed at high speed using the write data buffer function, enabling system throughput to be improved.

When the WDBE bit of BCRL in the bus controller is set to 1, enabling the write data buffer function, dual address transfer external write cycles or single address transfers and internal accesses (on-chip memory or internal I/O registers) are executed in parallel. Internal accesses are independent of the bus master, and DMAC dead cycles are regarded as internal accesses.

A low level can always be output from the $\overline{\text{TEND}}$ pin if the bus cycle in which a low level is to be output is an external bus cycle. However, a low level is not output from the $\overline{\text{TEND}}$ pin if the bus cycle in which a low level is to be output from the $\overline{\text{TEND}}$ pin is an internal bus cycle, and an external write cycle is executed in parallel with this cycle.

Figure 7-33 shows an example of burst mode transfer from on-chip RAM to external memory using the write data buffer function.

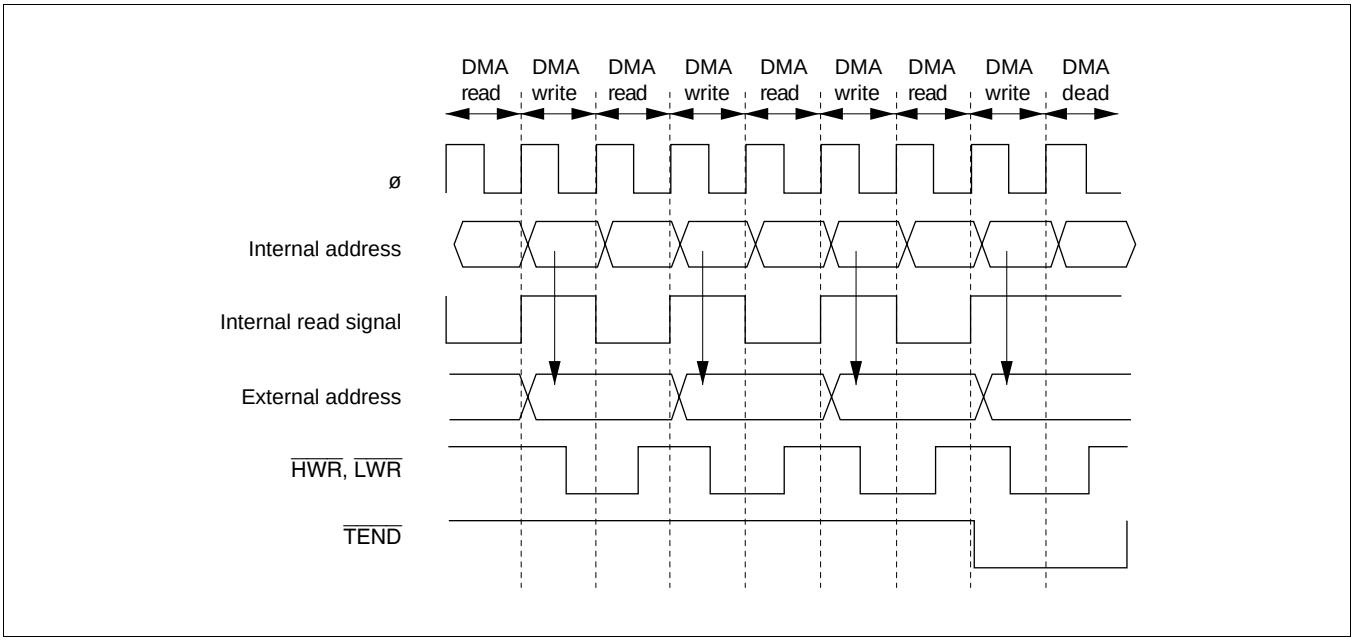

Figure 7-33 Example of Dual Address Transfer Using Write Data Buffer Function

Figure 7-34 shows an example of single address transfer using the write data buffer function. In this example, the CPU program area is in on-chip memory.

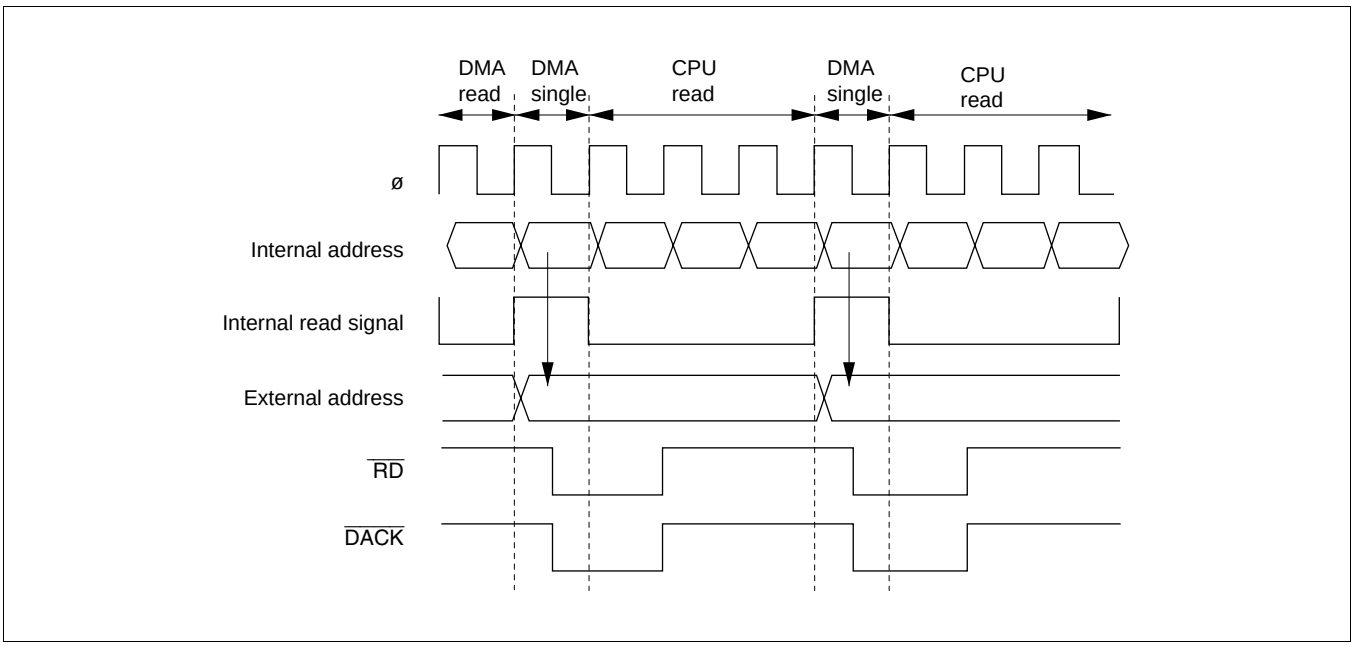

Figure 7-34 Example of Single Address Transfer Using Write Data Buffer Function

When the write data buffer function is activated, the DMAC recognizes that the bus cycle concerned has ended, and starts the next operation. Therefore, $\overline{\text{DREQ}}$ pin sampling is started one state after the start of the DMA write cycle or single address transfer.

7.5.13 DMAC Multi-Channel Operation

The DMAC channel priority order is: channel 0 > channel 1, and channel A > channel B. Table 7-13 summarizes the priority order for DMAC channels.

Table 7-13 DMAC Channel Priority Order

Short Address Mode	Full Address Mode	Priority
Channel 0A	Channel 0	High
Channel 0B		↑
Channel 1A	Channel 1	
Channel 1B		Low

If transfer requests are issued simultaneously for more than one channel, or if a transfer request for another channel is issued during a transfer, when the bus is released the DMAC selects the highest-priority channel from among those issuing a request according to the priority order shown in table 7-13.

During burst transfer, or when one block is being transferred in block transfer, the channel will not be changed until the end of the transfer.

Figure 7-35 shows a transfer example in which transfer requests are issued simultaneously for channels 0A, 0B, and 1.

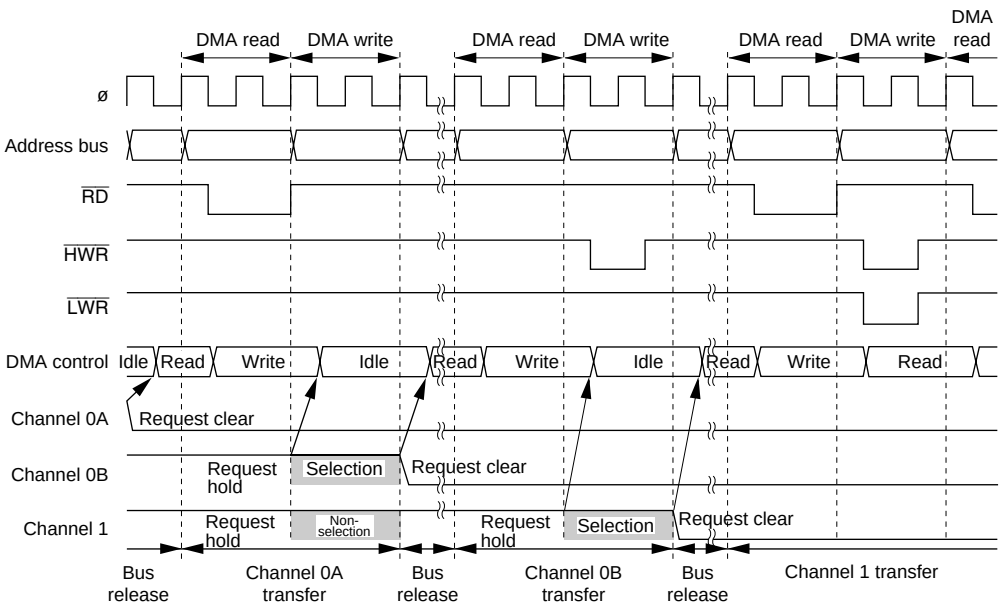

Figure 7-35 Example of Multi-Channel Transfer

7.5.14 Relation between External Bus Requests, Refresh Cycles, the DTC, and the DMAC

There can be no break between a DMA cycle read and a DMA cycle write. This means that a refresh cycle, external bus release cycle, or DTC cycle is not generated between the external read and external write in a DMA cycle.

In the case of successive read and write cycles, such as in burst transfer or block transfer, a refresh or external bus released state may be inserted after a write cycle. Since the DTC has a lower priority than the DMAC, the DTC does not operate until the DMAC releases the bus.

When DMA cycle reads or writes are accesses to on-chip memory or internal I/O registers, these DMA cycles can be executed at the same time as refresh cycles or external bus release. However, simultaneous operation may not be possible when a write buffer is used.

7.5.15 NMI Interrupts and DMAC

When an NMI interrupt is requested, burst mode transfer in full address mode is interrupted. An NMI interrupt does not affect the operation of the DMAC in other modes.

In full address mode, transfer is enabled for a channel when both the DTE bit and the DTME bit are set to 1. With burst mode setting, the DTME bit is cleared when an NMI interrupt is requested.

If the DTME bit is cleared during burst mode transfer, the DMAC discontinues transfer on completion of the 1-byte or 1-word transfer in progress, then releases the bus, which passes to the CPU.

The channel on which transfer was interrupted can be restarted by setting the DTME bit to 1 again. Figure 7-36 shows the procedure for continuing transfer when it has been interrupted by an NMI interrupt on a channel designated for burst mode transfer.

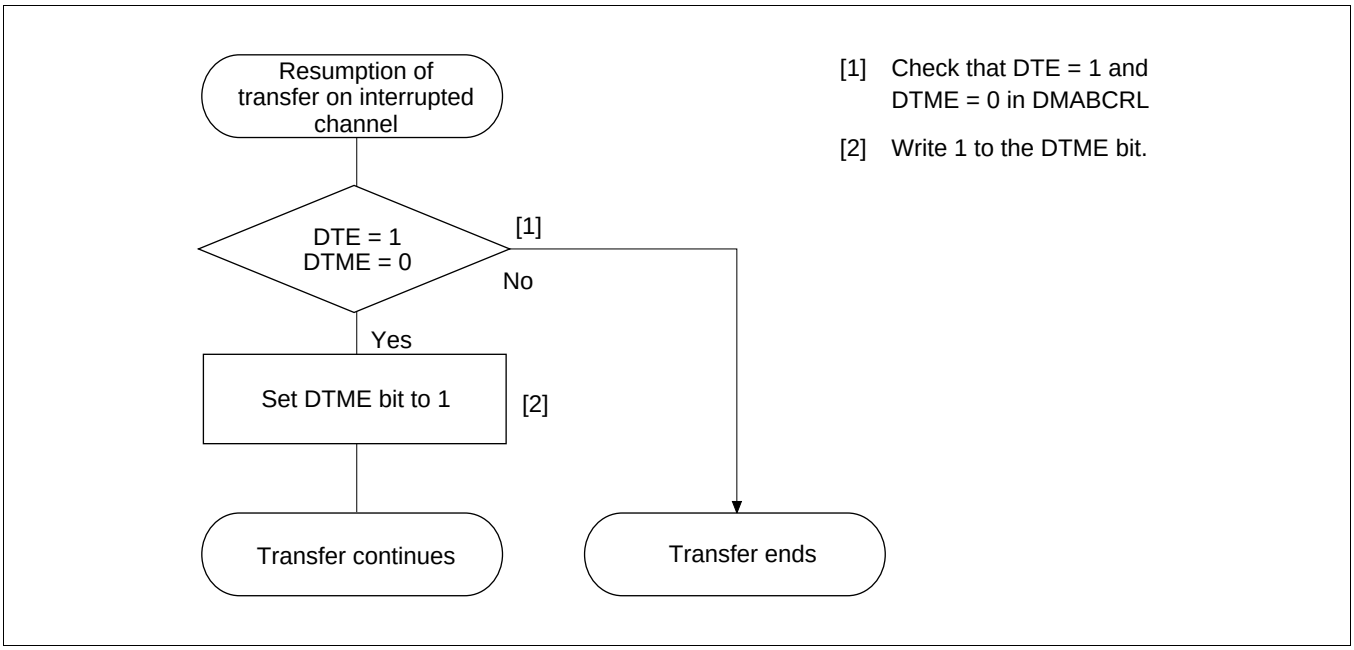

Figure 7-36 Example of Procedure for Continuing Transfer on Channel Interrupted by NMI Interrupt

7.5.16 Forced Termination of DMAC Operation

If the DTE bit for the channel currently operating is cleared to 0, the DMAC stops on completion of the 1-byte or 1-word transfer in progress. DMAC operation resumes when the DTE bit is set to 1 again.

In full address mode, the same applies to the DTME bit.

Figure 7-37 shows the procedure for forcibly terminating DMAC operation by software.

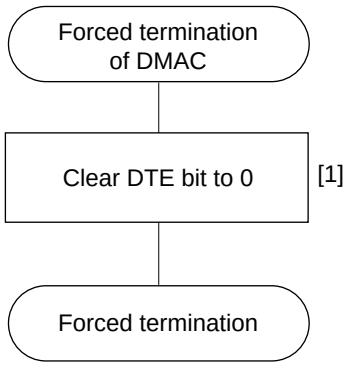

[1] Clear the DTE bit in DMABCRL to 0.
If you want to prevent interrupt generation after forced termination of DMAC operation, clear the DTIE bit to 0 at the same time.

Figure 7-37 Example of Procedure for Forcibly Terminating DMAC Operation

7.5.17 Clearing Full Address Mode

Figure 7-38 shows the procedure for releasing and initializing a channel designated for full address mode. After full address mode has been cleared, the channel can be set to another transfer mode using the appropriate setting procedure.

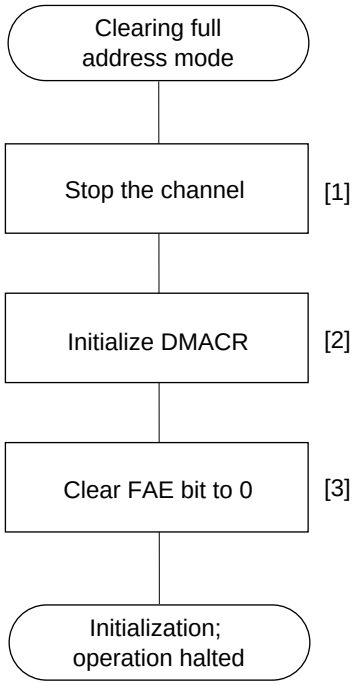

[1] Clear both the DTE bit and the DTME bit in DMABCRL to 0; or wait until the transfer ends and the DTE bit is cleared to 0, then clear the DTME bit to 0.
Also clear the corresponding DTIE bit to 0 at the same time.

[2] Clear all bits in DMACRA and DMACRB to 0.

[3] Clear the FAE bit in DMABCRH to 0.

Figure 7-38 Example of Procedure for Clearing Full Address Mode

7.6 Interrupts

The sources of interrupts generated by the DMAC are transfer end and transfer break. Table 7-14 shows the interrupt sources and their priority order.

Table 7-14 Interrupt Source Priority Order

Interrupt Name	Interrupt Source: Short Address Mode	Interrupt Source: Full Address Mode	Interrupt Priority Order
DEND0A	Interrupt due to end of transfer on channel 0A	Interrupt due to end of transfer on channel 0	High
DEND0B	Interrupt due to end of transfer on channel 0B	Interrupt due to break in transfer on channel 0	
DEND1A	Interrupt due to end of transfer on channel 1A	Interrupt due to end of transfer on channel 1	
DEND1B	Interrupt due to end of transfer on channel 1B	Interrupt due to break in transfer on channel 1	Low

Enabling or disabling of each interrupt source is set by means of the DTIE bit for the corresponding channel in DMABCR, and interrupts from each source are sent to the interrupt controller independently.

The relative priority of transfer end interrupts on each channel is decided by the interrupt controller, as shown in table 7-14.

Figure 7-39 shows a block diagram of a transfer end/transfer break interrupt. An interrupt is always generated when the DTIE bit is set to 1 while DTE bit is cleared to 0.

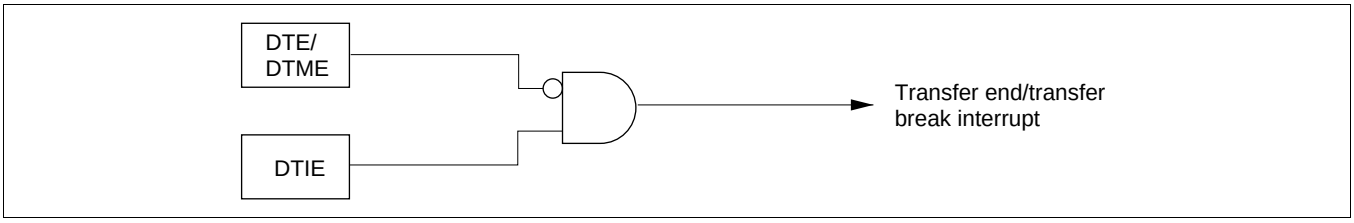

Figure 7-39 Block Diagram of Transfer End/Transfer Break Interrupt

In full address mode, a transfer break interrupt is generated when the DTME bit is cleared to o while DTIEB bit is set to 1.

In both short address mode and full address mode, DMABCR should be set so as to prevent the occurrence of a combination that constitutes a condition for interrupt generation during setting.

7.7 Usage Notes

DMAC Register Access during Operation: Except for forced termination, the operating (including transfer waiting state) channel setting should not be changed. The operating channel setting should only be changed when transfer is disabled.

Also, the DMAC register should not be written to in a DMA transfer.

DMAC register reads during operation (including the transfer waiting state) are described below.

(a) DMAC control starts one cycle before the bus cycle, with output of the internal address. Consequently, MAR is updated in the bus cycle before DMAC transfer.

Figure 7-40 shows an example of the update timing for DMAC registers in dual address transfer mode.

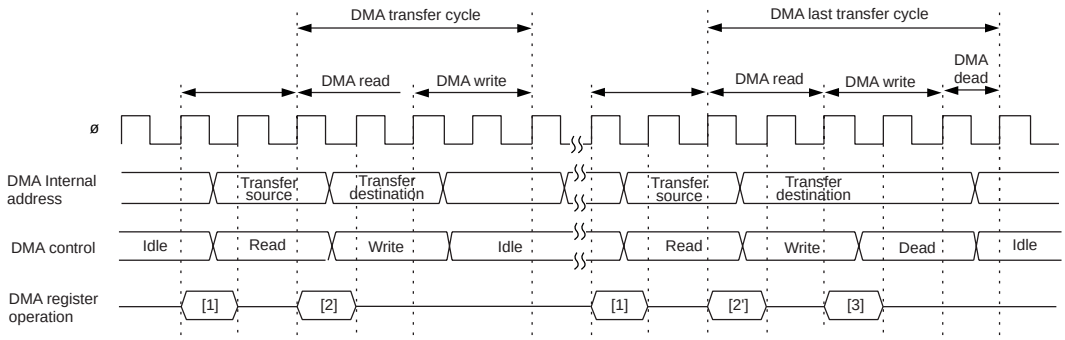

[1] Transfer source address register MAR operation (incremented/decremented/fixed)
Transfer counter ETCR operation (decremented)
Block size counter ETCR operation (decremented in block transfer mode)
[2] Transfer destination address register MAR operation (incremented/decremented/fixed)
[2'] Transfer destination address register MAR operation (incremented/decremented/fixed)
Block transfer counter ETCR operation (decremented, in last transfer cycle of a block in block transfer mode)
[3] Transfer address register MAR restore operation (in block or repeat transfer mode)
Transfer counter ETCR restore (in repeat transfer mode)
Block size counter ETCR restore (in block transfer mode)

Notes: 1. In single address transfer mode, the update timing is the same as [1].
2. The MAR operation is post-incrementing/decrementing of the DMA internal address value.

Figure 7-40 Example of DMAC Register Update Timing

(b) DMAC registers are read as shown in figure 7-41, when the DMAC transfer cycle occurs immediately after the DMAC register has been read.

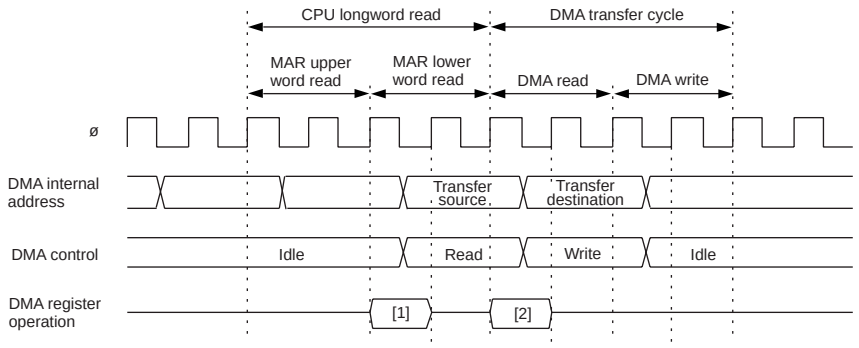

Note: The lower word of MAR is the updated value after the operation in [1].

Figure 7-41 Competition between Updating of DMAC Register and CPU Read Operations

Module Stop: When the MSTP15 bit in MSTPCR is set to 1, the DMAC clock stops, and the module stop state is entered. However, 1 cannot be written to the MSTP15 bit if any of the DMAC channels is enabled. This setting should therefore be made when DMAC operation is stopped.

When the DMAC clock stops, DMAC register accesses can no longer be made. Since the following DMAC register settings are valid even in the module stop state, they should be invalidated, if necessary, before a module stop.

- Transfer end/suspend interrupt (DTE = 0 and DTIE = 1)
- $\overline{\text{TEND}}$ pin enable (TEE = 1)
- $\overline{\text{DACK}}$ pin enable (FAE = 0 and SAE = 1)

Medium-Speed Mode: When the DTA bit is 0, internal interrupt signals specified as DMAC transfer sources are edge-detected.

In medium-speed mode, the DMAC operates on a medium-speed clock, while on-chip supporting modules operate on a high-speed clock. Consequently, if the period in which the relevant interrupt source is cleared by the CPU, DTC, or another DMAC channel, and the next interrupt is generated, is less than one state with respect to the DMAC clock (bus master clock), edge detection may not be possible and the interrupt may be ignored.

Also, in medium-speed mode, $\overline{\text{DREQ}}$ pin sampling is performed on the rising edge of the medium-speed clock.

Write Data Buffer Function: When the WDBE bit of BCRL in the bus controller is set to 1, enabling the write data buffer function, dual address transfer external write cycles or single address transfers and internal accesses (on-chip memory or internal I/O registers) are executed in parallel.

(a) Write Data Buffer Function and DMAC Register Setting

If the setting of is changed during execution of an external access by means of the write data buffer function, the external access may not be performed normally. The register that controls external accesses should only be manipulated when external reads, etc., are used with DMAC operation disabled, and the operation is not performed in parallel with external access.

(b) Write Data Buffer Function and DMAC Operation Timing

The DMAC can start its next operation during external access using the write data buffer function. Consequently, the $\overline{\text{DREQ}}$ pin sampling timing, $\overline{\text{TEND}}$ output timing, etc., are different from the case in which the write data buffer function is disabled. Also, internal bus cycles maybe hidden, and not visible.

(c) Write Data Buffer Function and $\overline{\text{TEND}}$ Output

A low level is not output from the $\overline{\text{TEND}}$ pin if the bus cycle in which a low level is to be output from the $\overline{\text{TEND}}$ pin is an internal bus cycle, and an external write cycle is executed in parallel with this cycle. Note, for example, that a low level may not be output from the $\overline{\text{TEND}}$ pin if the write data buffer function is used when data transfer is performed between an internal I/O register and on-chip memory.

If at least one of the DMAC transfer addresses is an external address, a low level is output from the $\overline{\text{TEND}}$ pin.

Figure 7-42 shows an example in which a low level is not output at the $\overline{\text{TEND}}$ pin.

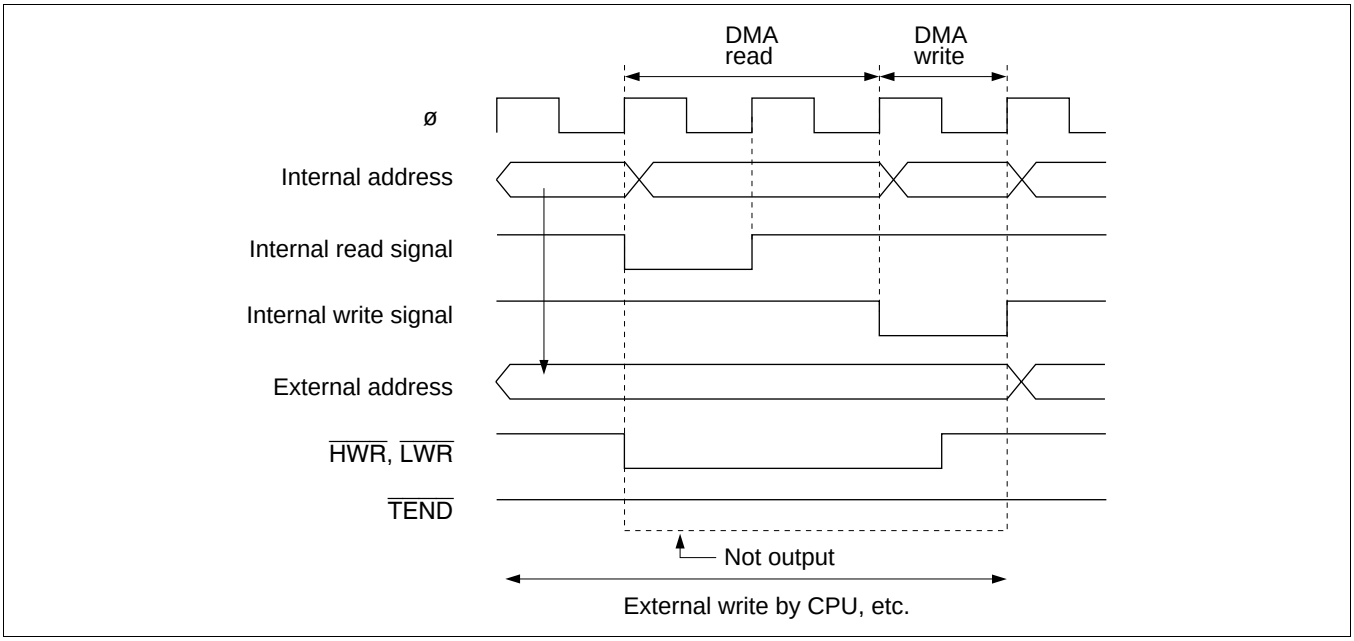

Figure 7-42 Example in Which Low Level is Not Output at $\overline{\text{TEND}}$ Pin

Activation by Falling Edge on $\overline{\text{DREQ}}$ Pin: $\overline{\text{DREQ}}$ pin falling edge detection is performed in synchronization with DMAC internal operations. The operation is as follows:

[1] Activation request wait state: Waits for detection of a low level on the $\overline{\text{DREQ}}$ pin, and switches to [2].

[2] Transfer wait state: Waits for DMAC data transfer to become possible, and switches to [3].

[3] Activation request disabled state: Waits for detection of a high level on the $\overline{\text{DREQ}}$ pin, and switches to [1].

After DMAC transfer is enabled, a transition is made to [1]. Thus, initial activation after transfer is enabled is performed by detection of a low level.

Activation Source Acceptance: At the start of activation source acceptance, a low level is detected in both $\overline{\text{DREQ}}$ pin falling edge sensing and low level sensing. Similarly, in the case of an internal interrupt, the interrupt request is detected. Therefore, a request is accepted from an internal interrupt or $\overline{\text{DREQ}}$ pin low level that occurs before execution of the DMABCRL write to enable transfer.

When the DMAC is activated, take any necessary steps to prevent an internal interrupt or $\overline{\text{DREQ}}$ pin low level remaining from the end of the previous transfer, etc.

Internal Interrupt after End of Transfer: When the DTE bit is cleared to 0 by the end of transfer or an abort, the selected internal interrupt request will be sent to the CPU or DTC even if DTA is set to 1.

Also, if internal DMAC activation has already been initiated when operation is aborted, the transfer is executed but flag clearing is not performed for the selected internal interrupt even if DTA is set to 1.

An internal interrupt request following the end of transfer or an abort should be handled by the CPU as necessary.

Channel Re-Setting: To reactivate a number of channels when multiple channels are enabled, use exclusive handling of transfer end interrupts, and perform DMABCR control bit operations exclusively.

Note, in particular, that in cases where multiple interrupts are generated between reading and writing of DMABCR, and a DMABCR operation is performed during new interrupt handling, the DMABCR write data in the original interrupt handling routine will be incorrect, and the write may invalidate the results of the operations by the multiple interrupts. Ensure that overlapping DMABCR operations are not performed by multiple interrupts, and that there is no separation between read and write operations by the use of a bit-manipulation instruction.

Also, when the DTE and DTME bits are cleared by the DMAC or are written with 0, they must first be read while cleared to 0 before the CPU can write 1 to them.

Section 8 Data Transfer Controller

8.1 Overview

The H8S/2357 Group includes a data transfer controller (DTC). The DTC can be activated by an interrupt or software, to transfer data.

8.1.1 Features

The features of the DTC are:

- Transfer possible over any number of channels
  - Transfer information is stored in memory
  - One activation source can trigger a number of data transfers (chain transfer)
- Wide range of transfer modes
  - Normal, repeat, and block transfer modes available
  - Incrementing, decrementing, and fixing of source and destination addresses can be selected
- Direct specification of 16-Mbyte address space possible
  - 24-bit transfer source and destination addresses can be specified
- Transfer can be set in byte or word units
- A CPU interrupt can be requested for the interrupt that activated the DTC
  - An interrupt request can be issued to the CPU after one data transfer ends
  - An interrupt request can be issued to the CPU after the specified data transfers have completely ended
- Activation by software is possible
- Module stop mode can be set
  - The initial setting enables DTC registers to be accessed. DTC operation is halted by setting module stop mode.

8.1.2 Block Diagram

Figure 8-1 shows a block diagram of the DTC.

The DTC's register information is stored in the on-chip RAM*. A 32-bit bus connects the DTC to the on-chip RAM (1 kbyte), enabling 32-bit/1-state reading and writing of the DTC register information and hence helping to increase processing speed.

Note: * When the DTC is used, the RAME bit in SYSCR must be set to 1.

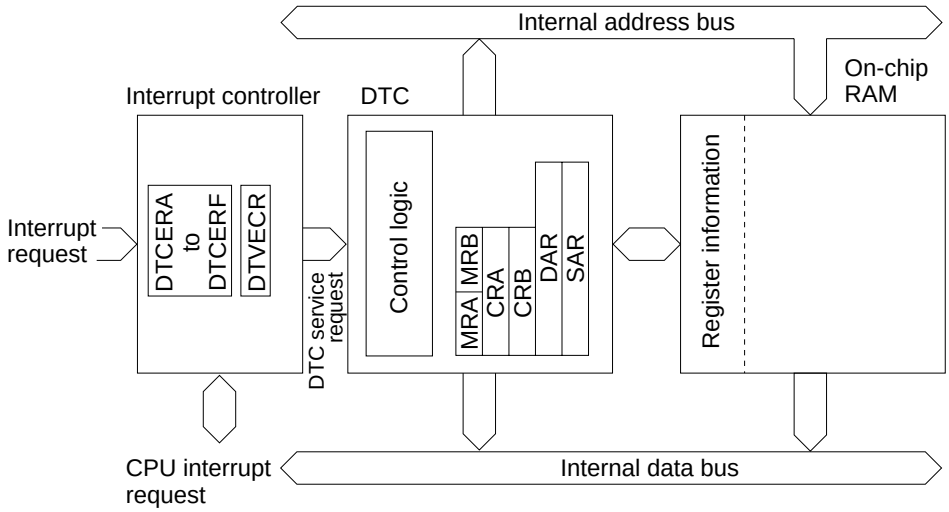

Legend:

MRA, MRB:	DTC mode registers A and B
CRA, CRB:	DTC transfer count registers A and B
SAR:	DTC source address register
DAR:	DTC destination address register
DTCERA to DTCERF:	DTC enable registers A to F
DTVECR:	DTC vector register

Figure 8-1 Block Diagram of DTC

8.1.3 Register Configuration

Table 8-1 summarizes the DTC registers.

Table 8-1 DTC Registers

Name	Abbreviation	R/W	Initial Value	Address*[1]
DTC mode register A	MRA	—*[2]	Undefined	—*[3]
DTC mode register B	MRB	—*[2]	Undefined	—*[3]
DTC source address register	SAR	—*[2]	Undefined	—*[3]
DTC destination address register	DAR	—*[2]	Undefined	—*[3]
DTC transfer count register A	CRA	—*[2]	Undefined	—*[3]
DTC transfer count register B	CRB	—*[2]	Undefined	—*[3]
DTC enable registers	DTCER	R/W	H'00	H'FF30 to H'FF35
DTC vector register	DTVECR	R/W	H'00	H'FF37
Module stop control register	MSTPCR	R/W	H'3FFF	H'FF3C

Notes: 1. Lower 16 bits of the address.
2. Registers within the DTC cannot be read or written to directly.
3. Register information is located in on-chip RAM addresses H'F800 to H'FBFF. It cannot be located in external space. When the DTC is used, do not clear the RAME bit in SYSCR to 0.

8.2 Register Descriptions

8.2.1 DTC Mode Register A (MRA)

Bit :	7	6	5	4	3	2	1	0
	SM1	SM0	DM1	DM0	MD1	MD0	DTS	Sz
Initial value :	Unde-fined	Unde-fined	Unde-fined	Unde-fined	Unde-fined	Unde-fined	Unde-fined	Unde-fined
R/W :	—	—	—	—	—	—	—	—

MRA is an 8-bit register that controls the DTC operating mode.

Bits 7 and 6—Source Address Mode 1 and 0 (SM1, SM0): These bits specify whether SAR is to be incremented, decremented, or left fixed after a data transfer.

Bit 7 SM1	Bit 6 SM0	Description
0	—	SAR is fixed
1	0	SAR is incremented after a transfer (by +1 when Sz = 0; by +2 when Sz = 1)
	1	SAR is decremented after a transfer (by –1 when Sz = 0; by –2 when Sz = 1)

Bits 5 and 4—Destination Address Mode 1 and 0 (DM1, DM0): These bits specify whether DAR is to be incremented, decremented, or left fixed after a data transfer.

Bit 5 DM1	Bit 4 DM0	Description
0	—	DAR is fixed
1	0	DAR is incremented after a transfer (by +1 when Sz = 0; by +2 when Sz = 1)
	1	DAR is decremented after a transfer (by –1 when Sz = 0; by –2 when Sz = 1)

Bits 3 and 2—DTC Mode (MD1, MD0): These bits specify the DTC transfer mode.

Bit 3 MD1	Bit 2 MD0	Description
0	0	Normal mode
	1	Repeat mode
1	0	Block transfer mode
	1	—

Bit 1—DTC Transfer Mode Select (DTS): Specifies whether the source side or the destination side is set to be a repeat area or block area, in repeat mode or block transfer mode.

Bit 1 DTS	Description
0	Destination side is repeat area or block area
1	Source side is repeat area or block area

Bit 0—DTC Data Transfer Size (Sz): Specifies the size of data to be transferred.

Bit 0 Sz	Description
0	Byte-size transfer
1	Word-size transfer

8.2.2 DTC Mode Register B (MRB)

Bit :	7	6	5	4	3	2	1	0
	CHNE	DISEL	—	—	—	—	—	—
Initial value :	Unde-fined	Unde-fined	Unde-fined	Unde-fined	Unde-fined	Unde-fined	Unde-fined	Unde-fined
R/W :	—	—	—	—	—	—	—	—

MRB is an 8-bit register that controls the DTC operating mode.

Bit 7—DTC Chain Transfer Enable (CHNE): Specifies chain transfer. With chain transfer, a number of data transfers can be performed consecutively in response to a single transfer request.

In data transfer with CHNE set to 1, determination of the end of the specified number of transfers, clearing of the interrupt source flag, and clearing of DTCER is not performed.

Bit 7 CHNE	Description
0	End of DTC data transfer (activation waiting state is entered)
1	DTC chain transfer (new register information is read, then data is transferred)

Bit 6—DTC Interrupt Select (DISEL): Specifies whether interrupt requests to the CPU are disabled or enabled after a data transfer.

Bit 6 DISEL	Description
0	After a data transfer ends, the CPU interrupt is disabled unless the transfer counter is 0 (the DTC clears the interrupt source flag of the activating interrupt to 0)
1	After a data transfer ends, the CPU interrupt is enabled (the DTC does not clear the interrupt source flag of the activating interrupt to 0)

Bits 5 to 0—Reserved: These bits have no effect on DTC operation in the H8S/2357 Group, and should always be written with 0.

8.2.3 DTC Source Address Register (SAR)

Bit :	23	22	21	20	19	– – –	4	3	2	1	0
						– – –					
Initial value :	Unde-fined	Unde-fined	Unde-fined	Unde-fined	Unde-fined	– – –	Unde-fined	Unde-fined	Unde-fined	Unde-fined	Unde-fined
R/W :	—	—	—	—	—	– – –	—	—	—	—	—

SAR is a 24-bit register that designates the source address of data to be transferred by the DTC. For word-size transfer, specify an even source address.

8.2.4 DTC Destination Address Register (DAR)

Bit :	23	22	21	20	19	– – –	4	3	2	1	0
						– – –					
Initial value :	Unde-fined	Unde-fined	Unde-fined	Unde-fined	Unde-fined	– – –	Unde-fined	Unde-fined	Unde-fined	Unde-fined	Unde-fined
R/W :	—	—	—	—	—	– – –	—	—	—	—	—

DAR is a 24-bit register that designates the destination address of data to be transferred by the DTC. For word-size transfer, specify an even destination address.

8.2.5 DTC Transfer Count Register A (CRA)

Bit :	15	14	13	12	11	10	9	8	7	6	5	4	3	2	1	0
Initial value :	Unde-fined	Unde-fined	Unde-fined	Unde-fined	Unde-fined	Unde-fined	Unde-fined	Unde-fined	Unde-fined	Unde-fined	Unde-fined	Unde-fined	Unde-fined	Unde-fined	Unde-fined	Unde-fined
R/W :	—	—	—	—	—	—	—	—	—	—	—	—	—	—	—	—
	← CRAH →								← CRAL →							

CRA is a 16-bit register that designates the number of times data is to be transferred by the DTC.

In normal mode, the entire CRA functions as a 16-bit transfer counter (1 to 65,536). It is decremented by 1 every time data is transferred, and transfer ends when the count reaches H'0000.

In repeat mode or block transfer mode, the CRA is divided into two parts: the upper 8 bits (CRAH) and the lower 8 bits (CRAL). CRAH holds the number of transfers while CRAL functions as an 8-bit transfer counter (1 to 256). CRAL is decremented by 1 every time data is transferred, and the contents of CRAH are sent when the count reaches H'00. This operation is repeated.

8.2.6 DTC Transfer Count Register B (CRB)

Bit :	15	14	13	12	11	10	9	8	7	6	5	4	3	2	1	0
Initial value :	Unde-fined	Unde-fined	Unde-fined	Unde-fined	Unde-fined	Unde-fined	Unde-fined	Unde-fined	Unde-fined	Unde-fined	Unde-fined	Unde-fined	Unde-fined	Unde-fined	Unde-fined	Unde-fined
R/W :	—	—	—	—	—	—	—	—	—	—	—	—	—	—	—	—

CRB is a 16-bit register that designates the number of times data is to be transferred by the DTC in block transfer mode. It functions as a 16-bit transfer counter (1 to 65,536) that is decremented by 1 every time data is transferred, and transfer ends when the count reaches H'0000.

8.2.7 DTC Enable Registers (DTCER)

Bit	:	7	6	5	4	3	2	1	0
		DTCE7	DTCE6	DTCE5	DTCE4	DTCE3	DTCE2	DTCE1	DTCE0
Initial value	:	0	0	0	0	0	0	0	0
R/W	:	R/W	R/W	R/W	R/W	R/W	R/W	R/W	R/W

The DTC enable registers comprise six 8-bit readable/writable registers, DTCERA to DTCERF, with bits corresponding to the interrupt sources that can activate the DTC. These bits enable or disable DTC service for the corresponding interrupt sources.

The DTC enable registers are initialized to H'00 by a reset and in hardware standby mode.

Bit n—DTC Activation Enable (DTCEn)

Bit n DTCEn	Description
0	DTC activation by this interrupt is disabled (Initial value) [Clearing conditions] • When the DISEL bit is 1 and the data transfer has ended • When the specified number of transfers have ended
1	DTC activation by this interrupt is enabled [Holding condition] When the DISEL bit is 0 and the specified number of transfers have not ended

(n = 7 to 0)

A DTCE bit can be set for each interrupt source that can activate the DTC. The correspondence between interrupt sources and DTCE bits is shown in table 8-4, together with the vector number generated for each interrupt controller.

For DTCE bit setting, read/write operations must be performed using bit-manipulation instructions such as BSET and BCLR. For the initial setting only, however, when multiple activation sources are set at one time, it is possible to disable interrupts and write after executing a dummy read on the relevant register.

8.2.8 DTC Vector Register (DTVECR)

Bit	:	7	6	5	4	3	2	1	0
		SWDTE	DTVEC6	DTVEC5	DTVEC4	DTVEC3	DTVEC2	DTVEC1	DTVEC0
Initial value	:	0	0	0	0	0	0	0	0
R/W	:	R/(W)*	R/W	R/W	R/W	R/W	R/W	R/W	R/W

Note: * A value of 1 can always be written to the SWDTE bit, but 0 can only be written after 1 is read.

DTVECR is an 8-bit readable/writable register that enables or disables DTC activation by software, and sets a vector number for the software activation interrupt.

DTVECR is initialized to H'00 by a reset and in hardware standby mode.

Bit 7—DTC Software Activation Enable (SWDTE): Enables or disables DTC activation by software.

When clearing the SWDTE bit to 0 by software, write 0 to SWDTE after reading SWDTE set to 1.

Bit 7 SWDTE	Description	
0	DTC software activation is disabled [Clearing condition] When the DISEL bit is 0 and the specified number of transfers have not ended	(Initial value)
1	DTC software activation is enabled [Holding conditions] • When the DISEL bit is 1 and data transfer has ended • When the specified number of transfers have ended • During data transfer due to software activation	

Bits 6 to 0—DTC Software Activation Vectors 6 to 0 (DTVEC6 to DTVEC0): These bits specify a vector number for DTC software activation.

The vector address is expressed as H'0400 + ((vector number) << 1). <<1 indicates a one-bit left-shift. For example, when DTVEC6 to DTVEC0 = H'10, the vector address is H'0420.

8.2.9 Module Stop Control Register (MSTPCR)

	MSTPCRH								MSTPCRL							
Bit :	15	14	13	12	11	10	9	8	7	6	5	4	3	2	1	0
Initial value :	0	0	1	1	1	1	1	1	1	1	1	1	1	1	1	1
R/W :	R/W	R/W	R/W	R/W	R/W	R/W	R/W	R/W	R/W	R/W	R/W	R/W	R/W	R/W	R/W	R/W

MSTPCR is a 16-bit readable/writable register that performs module stop mode control.

When the MSTP14 bit in MSTPCR is set to 1, the DTC operation stops at the end of the bus cycle and a transition is made to module stop mode. However, 1 cannot be written in the MSTP14 bit while the DTC is operating. For details, see section 21.5, Module Stop Mode.

MSTPCR is initialized to H'3FFF by a reset and in hardware standby mode. It is not initialized in software standby mode.

Bit 14—Module Stop (MSTP14): Specifies the DTC module stop mode.

Bit 14 MSTP14	Description	
0	DTC module stop mode cleared	(Initial value)
1	DTC module stop mode set	

8.3 Operation

8.3.1 Overview

When activated, the DTC reads register information that is already stored in memory and transfers data on the basis of that register information. After the data transfer, it writes updated register information back to memory. Pre-storage of register information in memory makes it possible to transfer data over any required number of channels. Setting the CHNE bit to 1 makes it possible to perform a number of transfers with a single activation.

Figure 8-2 shows a flowchart of DTC operation.

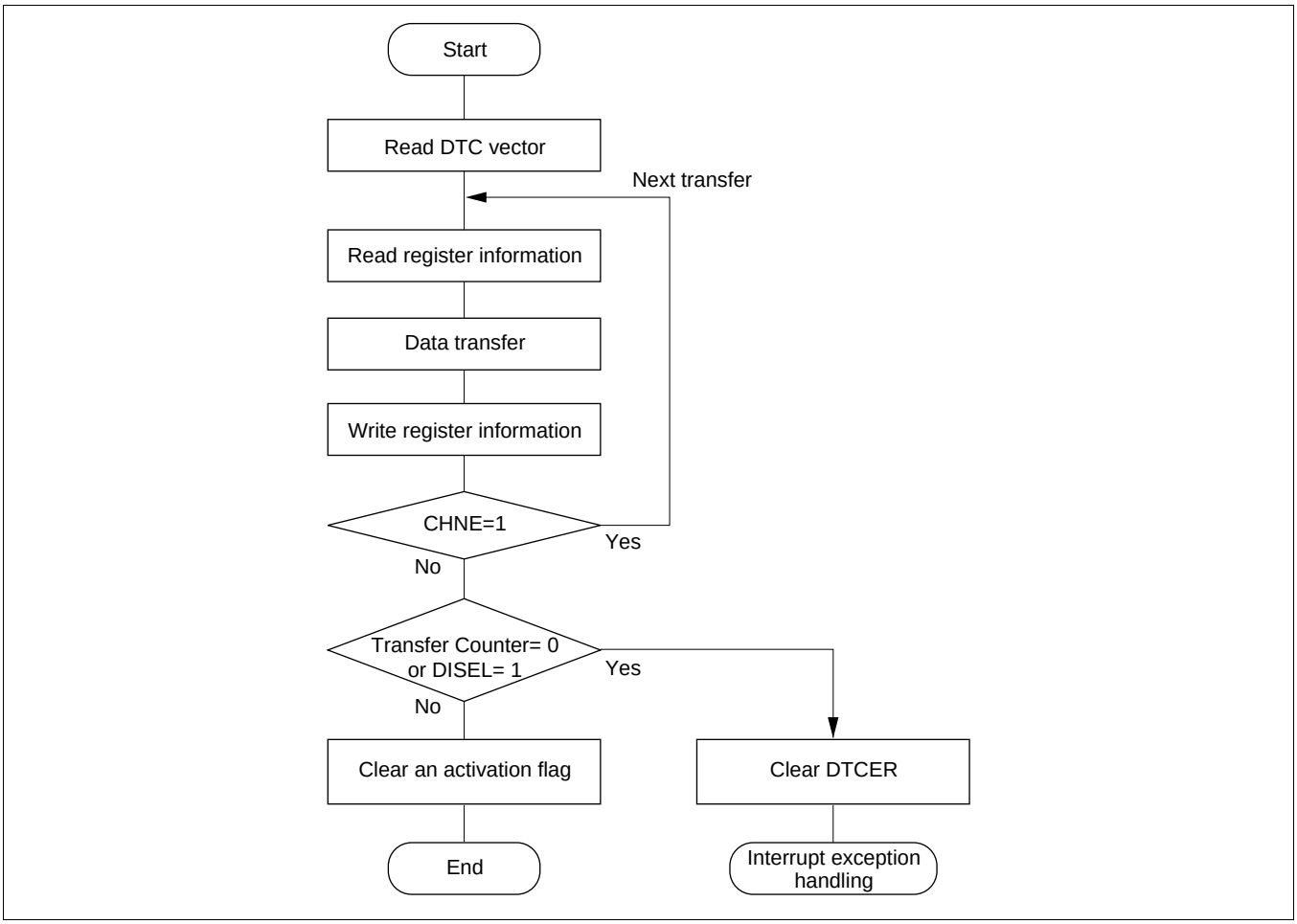

Figure 8-2 Flowchart of DTC Operation

The DTC transfer mode can be normal mode, repeat mode, or block transfer mode.

The 24-bit SAR designates the DTC transfer source address and the 24-bit DAR designates the transfer destination address. After each transfer, SAR and DAR are independently incremented, decremented, or left fixed.

Table 8-2 outlines the functions of the DTC.

Table 8-2 DTC Functions

Transfer Mode	Activation Source	Address Registers	
		Transfer Source	Transfer Destination
• Normal mode — One transfer request transfers one byte or one word — Memory addresses are incremented or decremented by 1 or 2 — Up to 65,536 transfers possible • Repeat mode — One transfer request transfers one byte or one word — Memory addresses are incremented or decremented by 1 or 2 — After the specified number of transfers (1 to 256), the initial state resumes and operation continues • Block transfer mode — One transfer request transfers a block of the specified size — Block size is from 1 to 256 bytes or words — Up to 65,536 transfers possible — A block area can be designated at either the source or destination	• IRQ • TPU TGI • 8-bit timer CMI • SCI TXI or RXI • A/D converter ADI • DMAC DEND • Software	24 bits	24 bits

8.3.2 Activation Sources

The DTC operates when activated by an interrupt or by a write to DTVECR by software. An interrupt request can be directed to the CPU or DTC, as designated by the corresponding DTCER bit. An interrupt becomes a DTC activation source when the corresponding bit is set to 1, and a CPU interrupt source when the bit is cleared to 0.

At the end of a data transfer (or the last consecutive transfer in the case of chain transfer), the activation source or corresponding DTCER bit is cleared. Table 8-3 shows activation source and DTCER clearance. The activation source flag, in the case of RXI0, for example, is the RDRF flag of SCI0.

Table 8-3 Activation Source and DTCER Clearance

Activation Source	When the DISEL Bit Is 0 and the Specified Number of Transfers Have Not Ended	When the DISEL Bit Is 1, or when the Specified Number of Transfers Have Ended
Software activation	The SWDTE bit is cleared to 0	The SWDTE bit remains set to 1 An interrupt is issued to the CPU
Interrupt activation	The corresponding DTCER bit remains set to 1 The activation source flag is cleared to 0	The corresponding DTCER bit is cleared to 0 The activation source flag remains set to 1 A request is issued to the CPU for the activation source interrupt

Figure 8-3 shows a block diagram of activation source control. For details see section 5, Interrupt Controller.

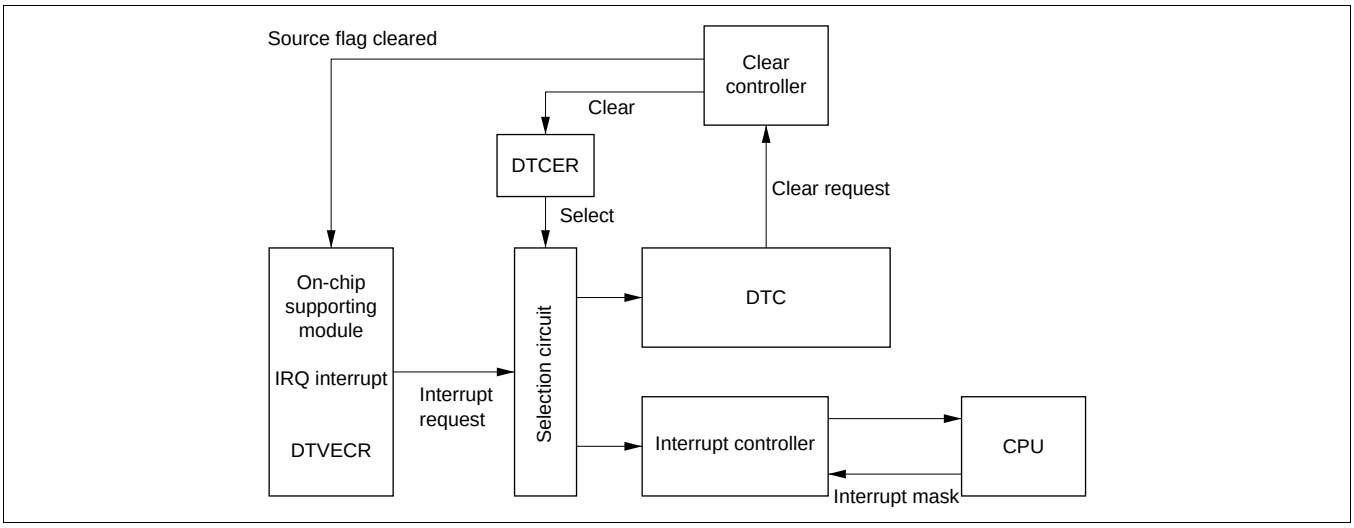

Figure 8-3 Block Diagram of DTC Activation Source Control

When an interrupt has been designated a DTC activation source, existing CPU mask level and interrupt controller priorities have no effect. If there is more than one activation source at the same time, the DTC operates in accordance with the default priorities.

8.3.3 DTC Vector Table

Figure 8-4 shows the correspondence between DTC vector addresses and register information.

Table 8-4 shows the correspondence between activation, vector addresses, and DTCER bits. When the DTC is activated by software, the vector address is obtained from: H'0400 + (DTVECR[6:0] << 1) (where << 1 indicates a 1-bit left shift). For example, if DTVECR is H'10, the vector address is H'0420.

The DTC reads the start address of the register information from the vector address set for each activation source, and then reads the register information from that start address. The register information can be placed at predetermined addresses in the on-chip RAM. The start address of the register information should be an integral multiple of four.

The configuration of the vector address is the same in both normal and advanced modes, a 2-byte unit being used in both cases. These two bytes specify the lower bits of the address in the on-chip RAM.

Table 8-4 Interrupt Sources, DTC Vector Addresses, and Corresponding DTCEs

Interrupt Source	Origin of Interrupt Source	Vector Number	Vector Address	DTCE*	Priority
Write to DTVECR	Software	DTVECR	H'0400+ (DTVECR [6:0]<<1)	—	High
IRQ0	External pin	16	H'0420	DTCEA7	
IRQ1		17	H'0422	DTCEA6	
IRQ2		18	H'0424	DTCEA5	
IRQ3		19	H'0426	DTCEA4	
IRQ4		20	H'0428	DTCEA3	
IRQ5		21	H'042A	DTCEA2	
IRQ6		22	H'042C	DTCEA1	
IRQ7		23	H'042E	DTCEA0	
ADI (A/D conversion end)	A/D	28	H'0438	DTCEB6	
TGI0A (GR0A compare match/ input capture)	TPU channel 0	32	H'0440	DTCEB5	
TGI0B (GR0B compare match/ input capture)		33	H'0442	DTCEB4	
TGI0C (GR0C compare match/ input capture)		34	H'0444	DTCEB3	
TGI0D (GR0D compare match/ input capture)		35	H'0446	DTCEB2	
TGI1A (GR1A compare match/ input capture)	TPU channel 1	40	H'0450	DTCEB1	
TGI1B (GR1B compare match/ input capture)		41	H'0452	DTCEB0	
TGI2A (GR2A compare match/ input capture)	TPU channel 2	44	H'0458	DTCEC7	
TGI2B (GR2B compare match/ input capture)		45	H'045A	DTCEC6	
TGI3A (GR3A compare match/ input capture)	TPU channel 3	48	H'0460	DTCEC5	
TGI3B (GR3B compare match/ input capture)		49	H'0462	DTCEC4	
TGI3C (GR3C compare match/ input capture)		50	H'0464	DTCEC3	
TGI3D (GR3D compare match/ input capture)		51	H'0466	DTCEC2	
TGI4A (GR4A compare match/ input capture)	TPU channel 4	56	H'0470	DTCEC1	
TGI4B (GR4B compare match/ input capture)		57	H'0472	DTCEC0	
TGI5A (GR5A compare match/ input capture)	TPU channel 5	60	H'0478	DTCED5	Low

Interrupt Source	Origin of Interrupt Source	Vector Number	Vector Address	DTCE*	Priority
TGI5B (GR5B compare match/ input capture)	TPU channel 5	61	H'047A	DTCED4	High
CMIA0	8-bit timer channel 0	64	H'0480	DTCED3	↑
CMIB0		65	H'0482	DTCED2	
CMIA1	8-bit timer channel 1	68	H'0488	DTCED1	
CMIB1		69	H'048A	DTCED0	
DMTEND0A (DMAC transfer end 0)	DMAC	72	H'0490	DTCEE7	
DMTEND0B (DMAC transfer end 1)		73	H'0492	DTCEE6	
DMTEND1A (DMAC transfer end 2)		74	H'0494	DTCEE5	
DMTEND1B (DMAC transfer end 3)		75	H'0496	DTCEE4	
RXI0 (reception data full 0)	SCI channel 0	81	H'04A2	DTCEE3	
TXI0 (transmit data empty 0)		82	H'04A4	DTCEE2	
RXI1 (reception data full 1)	SCI channel 1	85	H'04AA	DTCEE1	
TXI1 (transmit data empty 1)		86	H'04AC	DTCEE0	
RXI2 (reception data full 2)	SCI channel 2	89	H'04B2	DTCEF7	
TXI2 (transmit data empty 2)		90	H'04B4	DTCEF6	Low

Note: * DTCE bits with no corresponding interrupt are reserved, and should be written with 0.

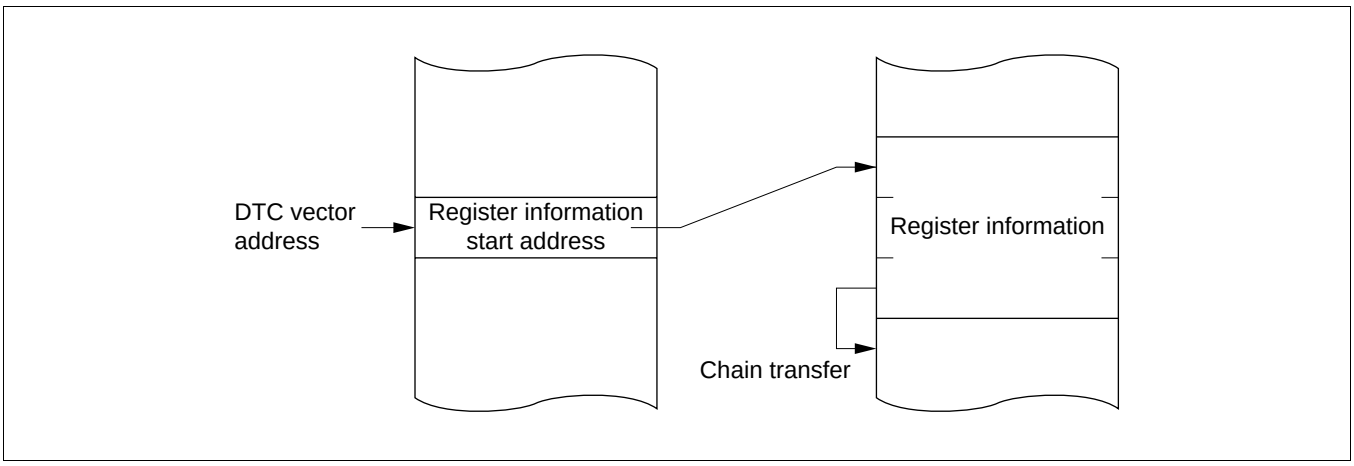

Figure 8-4 Correspondence between DTC Vector Address and Register Information

8.3.4 Location of Register Information in Address Space

Figure 8-5 shows how the register information should be located in the address space.

Locate the MRA, SAR, MRB, DAR, CRA, and CRB registers, in that order, from the start address of the register information (contents of the vector address). In the case of chain transfer, register information should be located in consecutive areas.

Locate the register information in the on-chip RAM (addresses: H'FFF800 to H'FFFBFF).

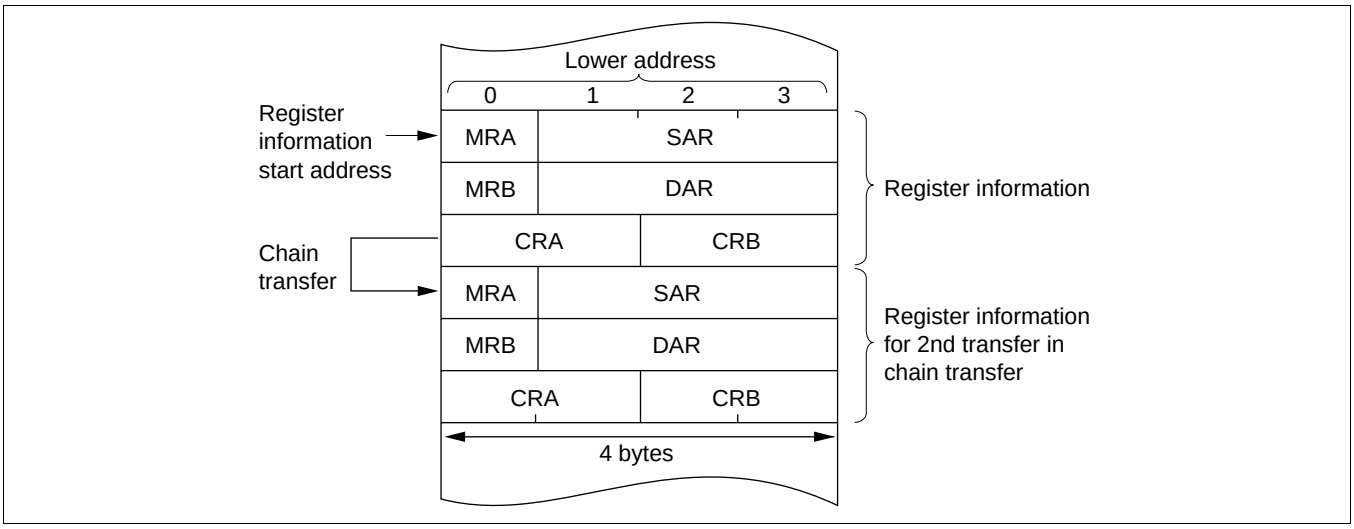

Figure 8-5 Location of Register Information in Address Space

8.3.5 Normal Mode

In normal mode, one operation transfers one byte or one word of data.

From 1 to 65,536 transfers can be specified. Once the specified number of transfers have ended, a CPU interrupt can be requested.

Table 8-5 lists the register information in normal mode and figure 8-6 shows memory mapping in normal mode.

Table 8-5 Register Information in Normal Mode

Name	Abbreviation	Function
DTC source address register	SAR	Designates source address
DTC destination address register	DAR	Designates destination address
DTC transfer count register A	CRA	Designates transfer count
DTC transfer count register B	CRB	Not used

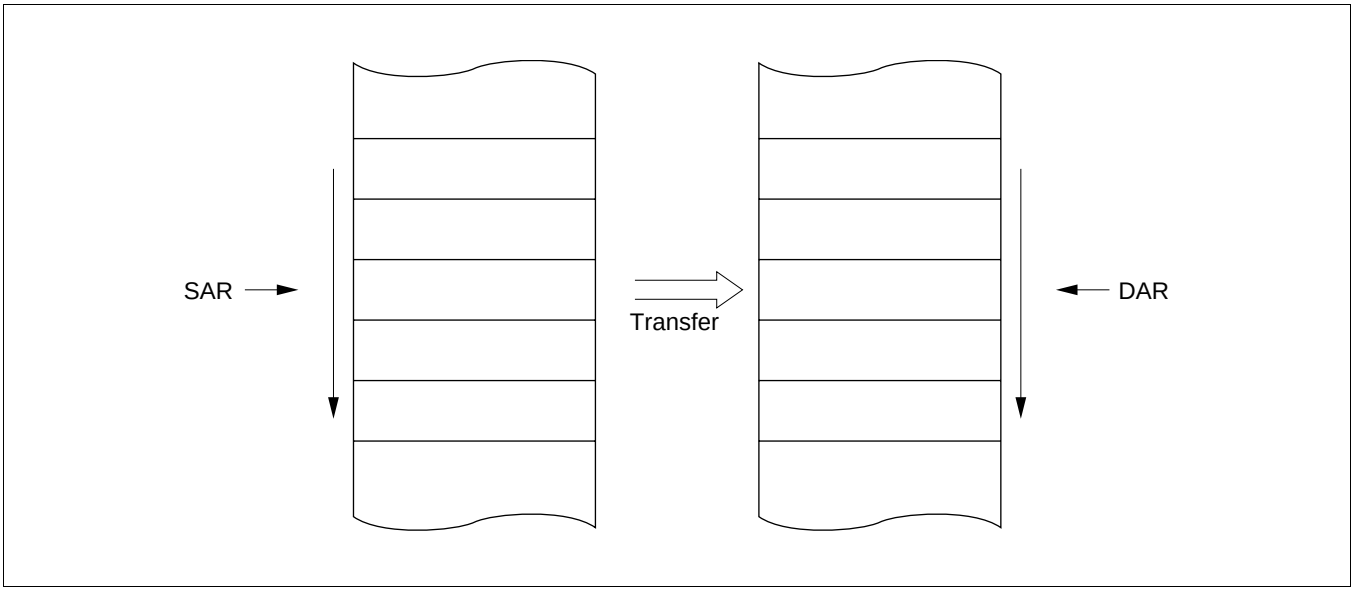

Figure 8-6 Memory Mapping in Normal Mode

8.3.6 Repeat Mode

In repeat mode, one operation transfers one byte or one word of data.

From 1 to 256 transfers can be specified. Once the specified number of transfers have ended, the initial state of the transfer counter and the address register specified as the repeat area is restored, and transfer is repeated. In repeat mode the transfer counter value does not reach H'00, and therefore CPU interrupts cannot be requested when DISEL = 0.

Table 8-6 lists the register information in repeat mode and figure 8-7 shows memory mapping in repeat mode.

Table 8-6 Register Information in Repeat Mode

Name	Abbreviation	Function
DTC source address register	SAR	Designates source address
DTC destination address register	DAR	Designates destination address
DTC transfer count register AH	CRAH	Holds number of transfers
DTC transfer count register AL	CRAL	Designates transfer count
DTC transfer count register B	CRB	Not used

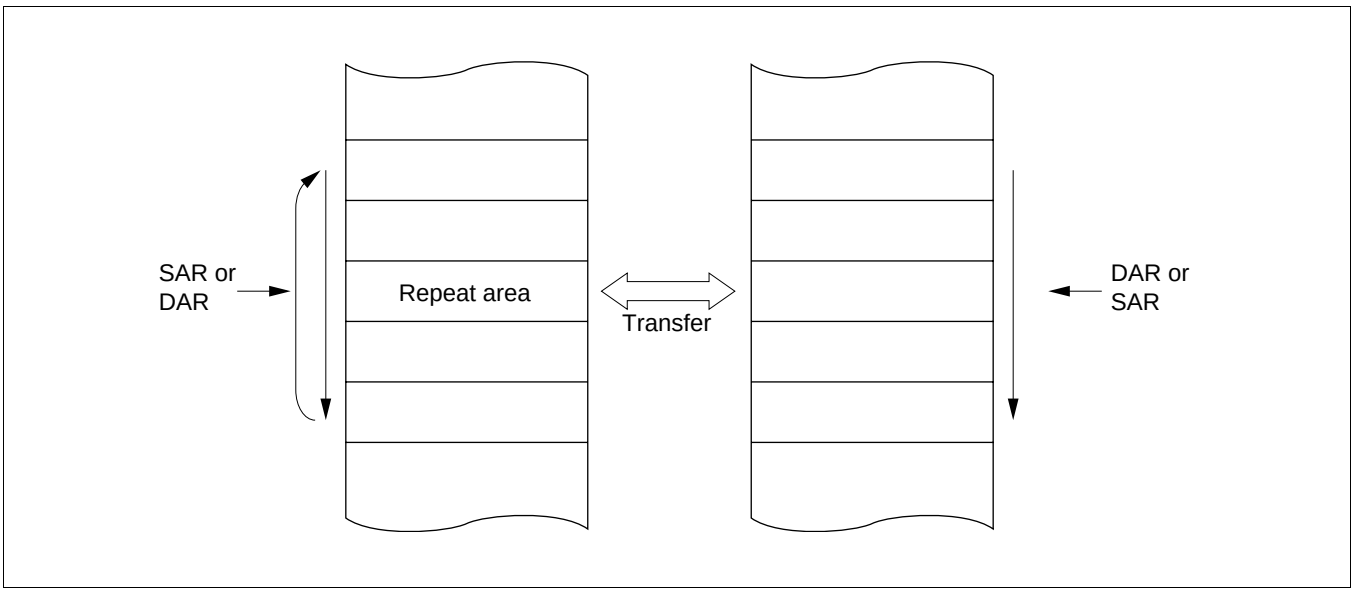

Figure 8-7 Memory Mapping in Repeat Mode

8.3.7 Block Transfer Mode

In block transfer mode, one operation transfers one block of data.

The block size is 1 to 256. When the transfer of one block ends, the initial state of the block size counter and the address register specified as the block area is restored. The other address register is then incremented, decremented, or left fixed.

From 1 to 65,536 transfers can be specified. Once the specified number of transfers have ended, a CPU interrupt is requested.

Table 8-7 lists the register information in block transfer mode and figure 8-8 shows memory mapping in block transfer mode.

Table 8-7 Register Information in Block Transfer Mode

Name	Abbreviation	Function
DTC source address register	SAR	Designates transfer source address
DTC destination address register	DAR	Designates destination address
DTC transfer count register AH	CRAH	Holds block size
DTC transfer count register AL	CRAL	Designates block size count
DTC transfer count register B	CRB	Transfer count

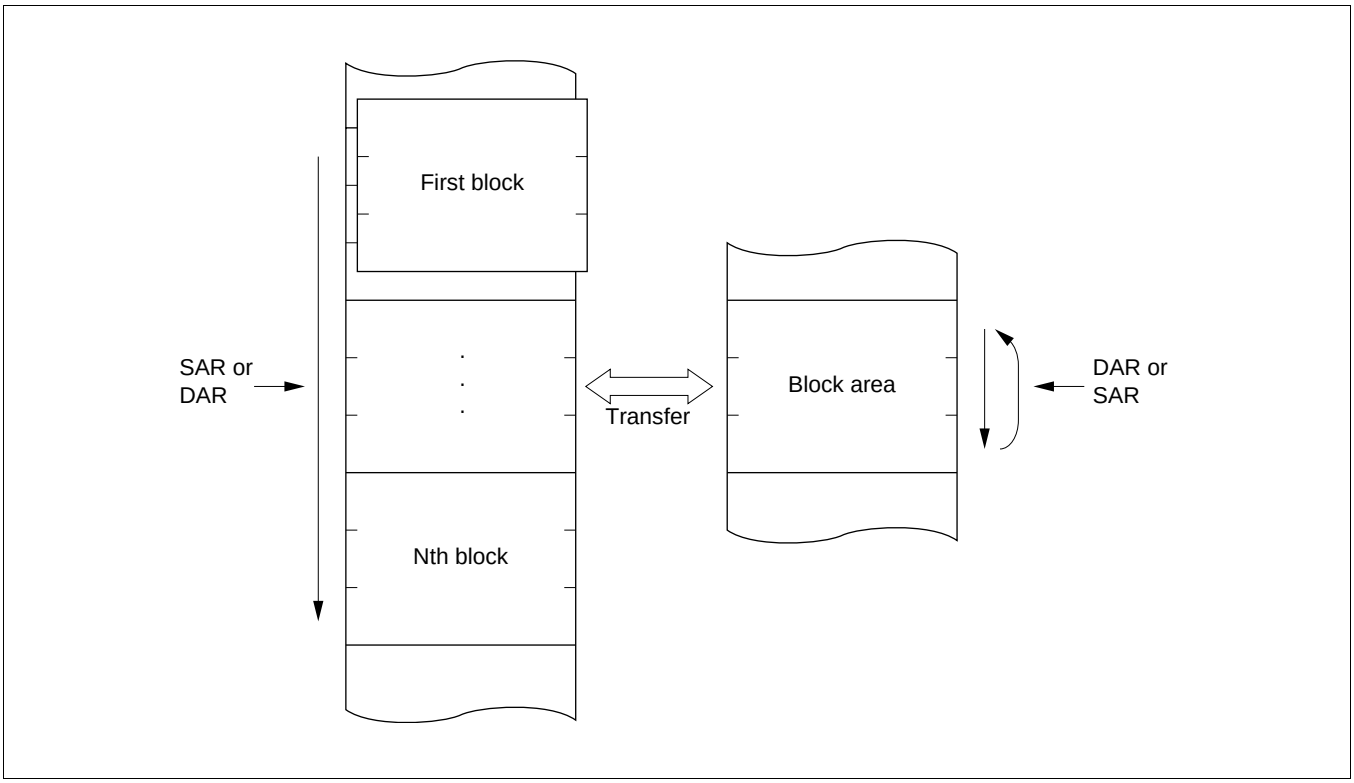

Figure 8-8 Memory Mapping in Block Transfer Mode

8.3.8 Chain Transfer

Setting the CHNE bit to 1 enables a number of data transfers to be performed consectutively in response to a single transfer request. SAR, DAR, CRA, CRB, MRA, and MRB, which define data transfers, can be set independently.

Figure 8-9 shows the memory map for chain transfer.

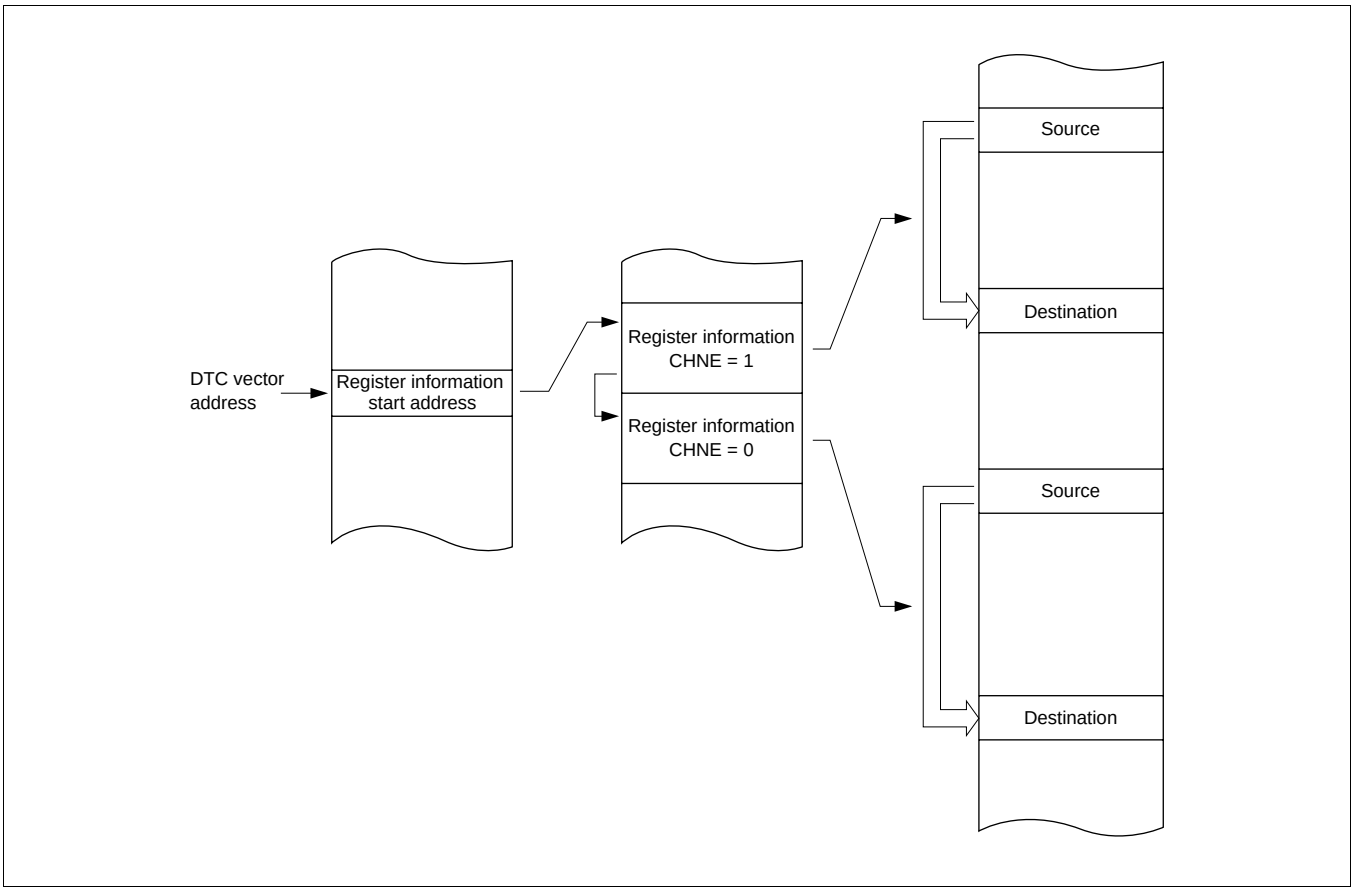

Figure 8-9 Chain Transfer Memory Map

In the case of transfer with CHNE set to 1, an interrupt request to the CPU is not generated at the end of the specified number of transfers or by setting of the DISEL bit to 1, and the interrupt source flag for the activation source is not affected.

8.3.9 Operation Timing

Figures 8-10 to 8-12 show an example of DTC operation timing.

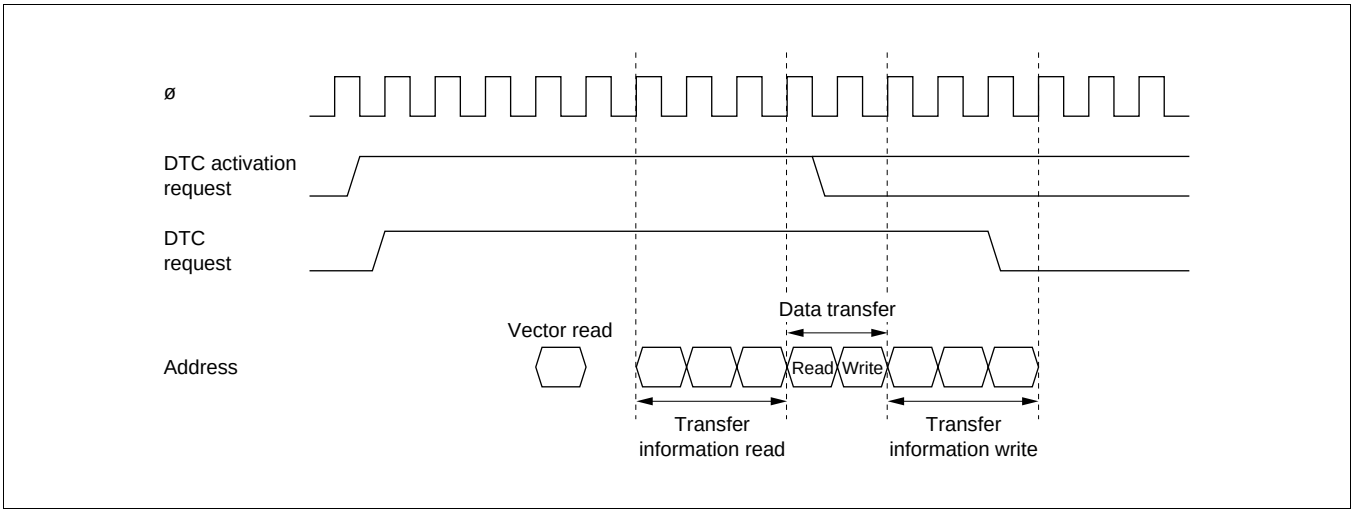

Figure 8-10 DTC Operation Timing (Example in Normal Mode or Repeat Mode)

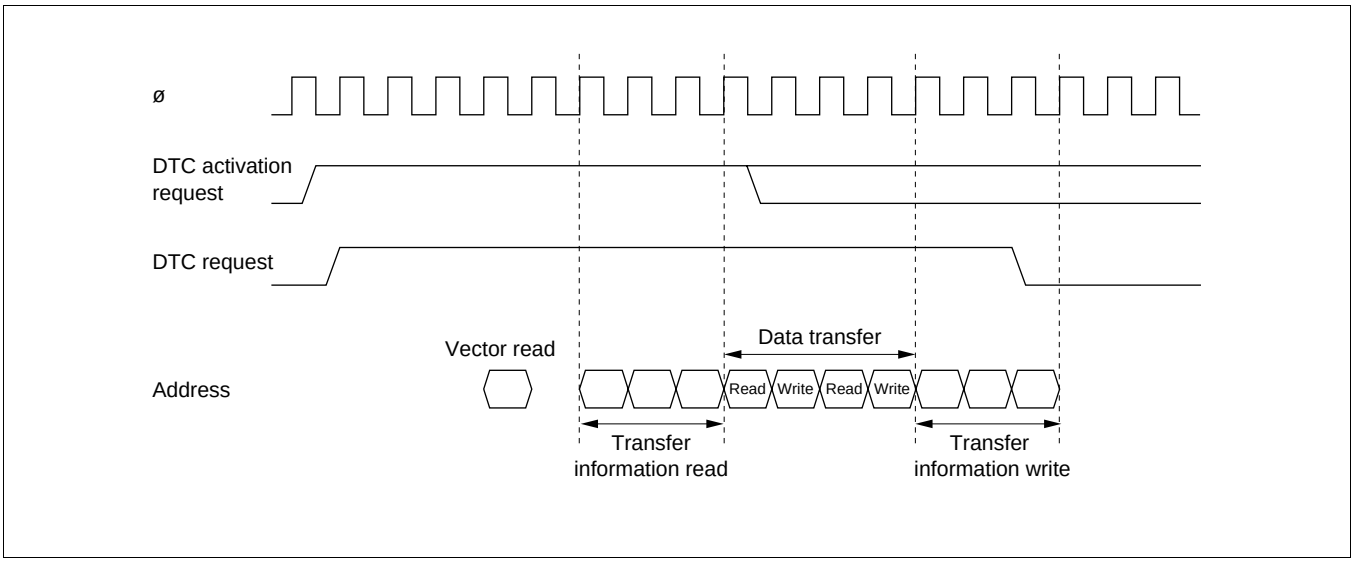

Figure 8-11 DTC Operation Timing (Example of Block Transfer Mode, with Block Size of 2)

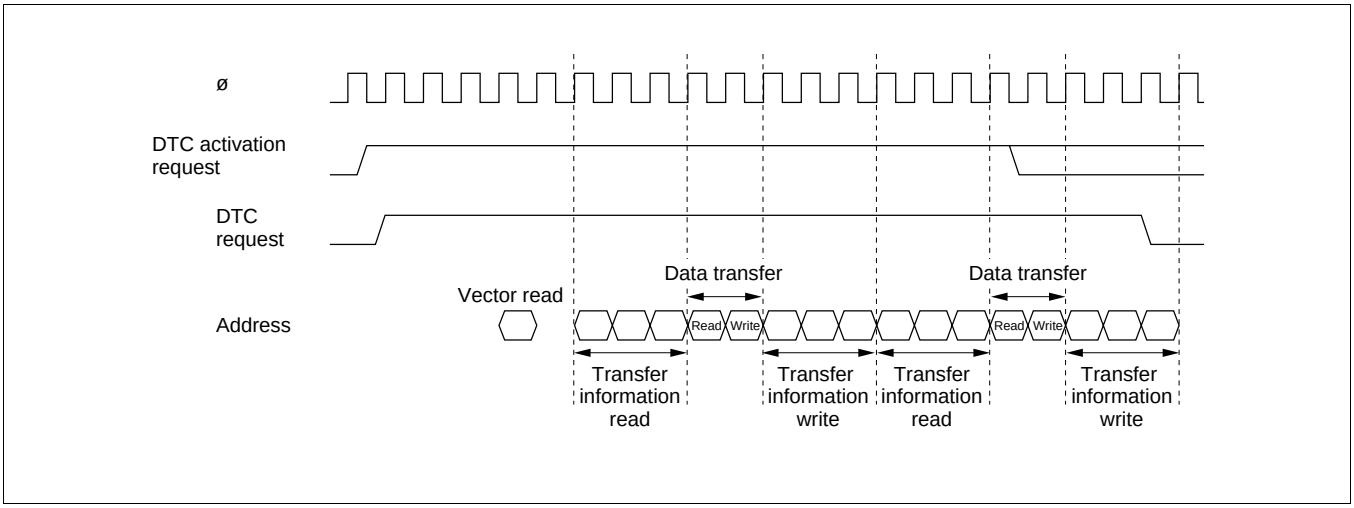

Figure 8-12 DTC Operation Timing (Example of Chain Transfer)

8.3.10 Number of DTC Execution States

Table 8-8 lists execution statuses for a single DTC data transfer, and table 8-9 shows the number of states required for each execution status.

Table 8-8 DTC Execution Statuses

Mode	Vector Read I	Register Information Read/Write J	Data Read K	Data Write L	Internal Operations M
Normal	1	6	1	1	3
Repeat	1	6	1	1	3
Block transfer	1	6	N	N	3

N: Block size (initial setting of CRAH and CRAL)

Table 8-9 Number of States Required for Each Execution Status

Object to be Accessed			On-Chip RAM	On-Chip ROM	On-Chip I/O Registers		External Devices			
Bus width			32	16	8	16	8		16	
Access states			1	1	2	2	2	3	2	3
Execution status	Vector read	S_I	—	1	—	—	4	6+2m	2	3+m
	Register information read/write	S_J	1	—	—	—	—	—	—	—
	Byte data read	S_K	1	1	2	2	2	3+m	2	3+m
	Word data read	S_K	1	1	4	2	4	6+2m	2	3+m
	Byte data write	S_L	1	1	2	2	2	3+m	2	3+m
	Word data write	S_L	1	1	4	2	4	6+2m	2	3+m
	Internal operation	S_M	1							

The number of execution states is calculated from the formula below. Note that Σ means the sum of all transfers activated by one activation event (the number in which the CHNE bit is set to 1, plus 1).

Number of execution states = $I \cdot S_I + \Sigma (J \cdot S_J + K \cdot S_K + L \cdot S_L) + M \cdot S_M$

For example, when the DTC vector address table is located in on-chip ROM, normal mode is set, and data is transferred from the on-chip ROM to an internal I/O register, the time required for the DTC operation is 13 states. The time from activation to the end of the data write is 10 states.

8.3.11 Procedures for Using DTC

Activation by Interrupt: The procedure for using the DTC with interrupt activation is as follows:

[1] Set the MRA, MRB, SAR, DAR, CRA, and CRB register information in the on-chip RAM.

[2] Set the start address of the register information in the DTC vector address.

[3] Set the corresponding bit in DTCER to 1.

[4] Set the enable bits for the interrupt sources to be used as the activation sources to 1. The DTC is activated when an interrupt used as an activation source is generated.

[5] After the end of one data transfer, or after the specified number of data transfers have ended, the DTCE bit is cleared to 0 and a CPU interrupt is requested. If the DTC is to continue transferring data, set the DTCE bit to 1.

Activation by Software: The procedure for using the DTC with software activation is as follows:

[1] Set the MRA, MRB, SAR, DAR, CRA, and CRB register information in the on-chip RAM.

[2] Set the start address of the register information in the DTC vector address.

[3] Check that the SWDTE bit is 0.

[4] Write 1 to SWDTE bit and the vector number to DTVECR.

[5] Check the vector number written to DTVECR.

[6] After the end of one data transfer, if the DISEL bit is 0 and a CPU interrupt is not requested, the SWDTE bit is cleared to 0. If the DTC is to continue transferring data, set the SWDTE bit to 1. When the DISEL bit is 1, or after the specified number of data transfers have ended, the SWDTE bit is held at 1 and a CPU interrupt is requested.

8.3.12 Examples of Use of the D7TC

(1) Normal Mode

An example is shown in which the DTC is used to receive 128 bytes of data via the SCI.

[1] Set MRA to fixed source address (SM1 = SM0 = 0), incrementing destination address (DM1 = 1, DM0 = 0), normal mode (MD1 = MD0 = 0), and byte size (Sz = 0). The DTS bit can have any value. Set MRB for one data transfer by one interrupt (CHNE = 0, DISEL = 0). Set the SCI RDR address in SAR, the start address of the RAM area where the data will be received in DAR, and 128 (H'0080) in CRA. CRB can be set to any value.

[2] Set the start address of the register information at the DTC vector address.

[3] Set the corresponding bit in DTCER to 1.

[4] Set the SCI to the appropriate receive mode. Set the RIE bit in SCR to 1 to enable the reception data full (RXI) interrupt. Since the generation of a receive error during the SCI reception operation will disable subsequent reception, the CPU should be enabled to accept receive error interrupts.

[5] Each time reception of one byte of data ends on the SCI, the RDRF flag in SSR is set to 1, an RXI interrupt is generated, and the DTC is activated. The receive data is transferred from RDR to RAM by the DTC. DAR is incremented and CRA is decremented. The RDRF flag is automatically cleared to 0.

[6] When CRA becomes 0 after the 128 data transfers have ended, the RDRF flag is held at 1, the DTCE bit is cleared to 0, and an RXI interrupt request is sent to the CPU. The interrupt handling routine should perform wrap-up processing.

(2) Chain Transfer

An example of DTC chain transfer is shown in which pulse output is performed using the PPG. Chain transfer can be used to perform pulse output data transfer and PPG output trigger cycle updating. Repeat mode transfer to the PPG's NDR is performed in the first half of the chain transfer, and normal mode transfer to the TPU's TGR in the second half. This is because clearing of the activation source and interrupt generation at the end of the specified number of transfers are restricted to the second half of the chain transfer (transfer when CHNE = 0).

[1] Perform settings for transfer to the PPG's NDR. Set MRA to source address incrementing (SM1 = 1, SM0 = 0), fixed destination address (DM1 = DM0 = 0), repeat mode (MD1 = 0, MD0 = 1), and word size (Sz = 1). Set the source side as a repeat area (DTS = 1). Set MRB to chain mode (CHNE = 1, DISEL = 0). Set the data table start address in SAR, the NDRH address in DAR, and the data table size in CRAH and CRAL. CRB can be set to any value.

[2] Perform settings for transfer to the TPU's TGR. Set MRA to source address incrementing (SM1 = 1, SM0 = 0), fixed destination address (DM1 = DM0 = 0), normal mode (MD1 = MD0 = 0), and word size (Sz = 1). Set the data table start address in SAR, the TGRA address in DAR, and the data table size in CRA. CRB can be set to any value.

[3] Locate the TPU transfer register information consecutively after the NDR transfer register information.

[4] Set the start address of the NDR transfer register information to the DTC vector address.

[5] Set the bit corresponding to TGIA in DTCER to 1.

[6] Set TGRA as an output compare register (output disabled) with TIOR, and enable the TGIA interrupt with TIER.

[7] Set the initial output value in PODR, and the next output value in NDR. Set bits in DDR and NDER for which output is to be performed to 1. Using PCR, select the TPU compare match to be used as the output trigger.

[8] Set the CST bit in TSTR to 1, and start the TCNT count operation.

[9] Each time a TGRA compare match occurs, the next output value is transferred to NDR and the set value of the next output trigger period is transferred to TGRA. The activation source TGFA flag is cleared.

[10] When the specified number of transfers are completed (the TPU transfer CRA value is 0), the TGFA flag is held at 1, the DTCE bit is cleared to 0, and a TGIA interrupt request is sent to the CPU. Termination processing should be performed in the interrupt handling routine.

(3) Software Activation

An example is shown in which the DTC is used to transfer a block of 128 bytes of data by means of software activation. The transfer source address is H'1000 and the destination address is H'2000. The vector number is H'60, so the vector address is H'04C0.

[1] Set MRA to incrementing source address (SM1 = 1, SM0 = 0), incrementing destination address (DM1 = 1, DM0 = 0), block transfer mode (MD1 = 1, MD0 = 0), and byte size (Sz = 0). The DTS bit can have any value. Set MRB for one block transfer by one interrupt (CHNE = 0). Set the transfer source address (H'1000) in SAR, the destination address (H'2000) in DAR, and 128 (H'8080) in CRA. Set 1 (H'0001) in CRB.

[2] Set the start address of the register information at the DTC vector address (H'04C0).

[3] Check that the SWDTE bit in DTVECR is 0. Check that there is currently no transfer activated by software.

[4] Write 1 to the SWDTE bit and the vector number (H'60) to DTVECR. The write data is H'E0.

[5] Read DTVECR again and check that it is set to the vector number (H'60). If it is not, this indicates that the write failed. This is presumably because an interrupt occurred between steps 3 and 4 and led to a different software activation. To activate this transfer, go back to step 3.

[6] If the write was successful, the DTC is activated and a block of 128 bytes of data is transferred.

[7] After the transfer, an SWDTEND interrupt occurs. The interrupt handling routine should clear the SWDTE bit to 0 and perform other wrap-up processing.

8.4 Interrupts

An interrupt request is issued to the CPU when the DTC finishes the specified number of data transfers, or a data transfer for which the DISEL bit was set to 1. In the case of interrupt activation, the interrupt set as the activation source is generated. These interrupts to the CPU are subject to CPU mask level and interrupt controller priority level control.

In the case of activation by software, a software activated data transfer end interrupt (SWDTEND) is generated.

When the DISEL bit is 1 and one data transfer has ended, or the specified number of transfers have ended, after data transfer ends, the SWDTE bit is held at 1 and an SWDTEND interrupt is generated. The interrupt handling routine should clear the SWDTE bit to 0.

When the DTC is activated by software, an SWDTEND interrupt is not generated during a data transfer wait or during data transfer even if the SWDTE bit is set to 1.

8.5 Usage Notes

Module Stop: When the MSTP14 bit in MSTPCR is set to 1, the DTC clock stops, and the DTC enters the module stop state. However, 1 cannot be written in the MSTP14 bit while the DTC is operating.

On-Chip RAM: The MRA, MRB, SAR, DAR, CRA, and CRB registers are all located in on-chip RAM. When the DTC is used, the RAME bit in SYSCR must not be cleared to 0.

DMAC Transfer End Interrupt: When DTC transfer is activated by a DMAC transfer end interrupt, regardless of the transfer counter and DISEL bit, the DMAC's DTE bit is not subject to DTC control, and the write data has priority. Consequently, an interrupt request may not be sent to the CPU when the DTC transfer counter reaches 0.

DTCE Bit Setting: For DTCE bit setting, read/write operations must be performed using bit-manipulation instructions such as BSET and BCLR. For the initial setting only, however, when multiple activation sources are set at one time, it is possible to disable interrupts and write after executing a dummy read on the relevant register.

Section 9 I/O Ports

9.1 Overview

The H8S/2357 Group has 12 I/O ports (ports 1, 2, 3, 5, 6, and A to G), and one input-only port (port 4).

Table 9-1 summarizes the port functions. The pins of each port also have other functions.

Each port includes a data direction register (DDR) that controls input/output (not provided for the input-only port), a data register (DR) that stores output data, and a port register (PORT) used to read the pin states.

Ports A to E have a on-chip pull-up MOS function, and in addition to DR and DDR, have a MOS input pull-up control register (PCR) to control the on/off state of MOS input pull-up.

Port 3 and port A include an open-drain control register (ODR) that controls the on/off state of the output buffer PMOS.

Ports 1, and A to F can drive a single TTL load and 90 pF capacitive load, and ports 2, 3, 5, 6, and G can drive a single TTL load and 30 pF capacitive load. All the I/O ports can drive a Darlington transistor when in output mode. Ports 1, A, B, and C can drive an LED (10 mA sink current).

Port 2, and pins 6_4 to 6_7 and A_4 to A_7, are Schmitt-triggered inputs.

For block diagrams of the ports see Appendix C, I/O Port Block Diagrams.

Table 9-1 Port Functions

Port	Description	Pins	Mode 4*3	Mode 5*3	Mode 6	Mode 7
Port 1	• 8-bit I/O port	$P1_7$/PO15/TIOCB2/TCLKD $P1_6$/PO14/TIOCA2 $P1_5$/PO13/TIOCB1/TCLKC $P1_4$/PO12/TIOCA1 $P1_3$/PO11/TIOCD0/TCLKB $P1_2$/PO10/TIOCC0/TCLKA $P1_1$/PO9/TIOCB0/$\overline{DACK1}$ $P1_0$/PO8/TIOCA0/$\overline{DACK0}$	8-bit I/O port also functioning as DMA controller output pins ($\overline{DACK0}$ and $\overline{DACK1}$), TPU I/O pins (TCLKA, TCLKB, TCLKC, TCLKD, TIOCA0, TIOCB0, TIOCC0, TIOCD0, TIOCA1, TIOCB1, TIOCA2, TIOCB2) and PPG output pins (PO15 to PO8)			
Port 2	• 8-bit I/O port • Schmitt-triggered input	$P2_7$/PO7/TIOCB5/TMO1 $P2_6$/PO6/TIOCA5/TMO0 $P2_5$/PO5/TIOCB4/TMCI1 $P2_4$/PO4/TIOCA4/TMRI1 $P2_3$/PO3/TIOCD3/TMCI0 $P2_2$/PO2/TIOCC3/TMRI0 $P2_1$/PO1/TIOCB3 $P2_0$/PO0/TIOCA3	8-bit I/O port also functioning as TPU I/O pins (TIOCA3, TIOCB3, TIOCC3, TIOCD3, TIOCA4, TIOCB4, TIOCA5, TIOCB5), 8-bit timer (channels 0 and 1) I/O pins (TMRI0, TMCI0, TMO0, TMRI1, TMCI1, TMO1) and PPG output pins (PO7 to PO0)			
Port 3	• 6-bit I/O port • Open-drain output capability	$P3_5$/SCK1 $P3_4$/SCK0 $P3_3$/RxD1 $P3_2$/RxD0 $P3_1$/TxD1 $P3_0$/TxD0	6-bit I/O port also functioning as SCI (channels 0 and 1) I/O pins (TxD0, RxD0, SCK0, TxD1, RxD1, SCK1)			
Port 4	• 8-bit input port	$P4_7$/AN7/DA1 $P4_6$/AN6/DA0 $P4_5$/AN5 $P4_4$/AN4 $P4_3$/AN3 $P4_2$/AN2 $P4_1$/AN1 $P4_0$/AN0	8-bit input port also functioning as A/D converter analog inputs (AN7 to AN0) and D/A converter analog outputs (DA1 and DA0)			
Port 5	• 4-bit I/O port	$P5_3$/$\overline{ADTRG}$ $P5_2$/SCK2 $P5_1$/RxD2 $P5_0$/TxD2	4-bit I/O port also functioning as SCI (channel 2) I/O pins (TxD2, RxD2, SCK2) and A/D converter input pin ($\overline{ADTRG}$)			
Port 6	• 8-bit I/O port • Schmitt-triggered input ($P6_4$ to $P6_7$)	$P6_7$/$\overline{IRQ3}$/$\overline{CS7}$ $P6_6$/$\overline{IRQ2}$/$\overline{CS6}$ $P6_5$/$\overline{IRQ1}$ $P6_4$/$\overline{IRQ0}$ $P6_3$/$\overline{TEND1}$ $P6_2$/$\overline{DREQ1}$ $P6_1$/$\overline{TEND0}$/$\overline{CS5}$ $P6_0$/$\overline{DREQ0}$/$\overline{CS4}$	8-bit I/O port also functioning as DMA controller I/O pins ($\overline{DREQ0}$, $\overline{TEND0}$, $\overline{DREQ1}$, $\overline{TEND1}$), bus control output pins ($\overline{CS4}$ to $\overline{CS7}$), and interrupt input pins ($\overline{IRQ0}$ to $\overline{IRQ3}$)			8-bit I/O port also functioning as interrupt input pins ($\overline{IRQ0}$ to $\overline{IRQ3}$)

Port	Description	Pins	Mode 4*3	Mode 5*3	Mode 6	Mode 7
Port A	• 8-bit I/O port • On-chip MOS input pull-up*4 • Open-drain output capability*4 • Schmitt-triggered input (PA_4 to PA_7)	$PA_7/A_{23}/\overline{IRQ7}$ $PA_6/A_{22}/\overline{IRQ6}$ $PA_5/A_{21}/\overline{IRQ5}$	When DDR = 0 (after reset): dual function as input ports and interrupt input pins ($\overline{IRQ7}$ to $\overline{IRQ5}$) When DDR = 1: address output		When DDR = 0 (after reset): dual function as input ports and interrupt input pins ($\overline{IRQ7}$ to $\overline{IRQ4}$) When DDR = 1: address output	Dual function as I/O ports and interrupt input pins ($\overline{IRQ7}$ to $\overline{IRQ4}$)
		$PA_4/A_{20}/\overline{IRQ4}$	Address output			
		PA_3/A_{19} to PA_0/A_{16}	Address output		When DDR = 0 (after reset): input ports When DDR = 1: address output	I/O port
Port B	• 8-bit I/O port • On-chip MOS input pull-up*4	PB_7/A_{15} to PB_0/A_8	Address output		When DDR = 0 (after reset): input port When DDR = 1: address output	I/O port
Port C	• 8-bit I/O port • On-chip MOS input pull-up*4	PC_7/A_7 to PC_0/A_0	Address output		When DDR = 0 (after reset): input port When DDR = 1: address output	I/O port
Port D	• 8-bit I/O port • On-chip MOS input pull-up*4	PD_7/D_{15} to PD_0/D_8	Data bus input/output			I/O port
Port E	• 8-bit I/O port • On-chip MOS input pull-up*4	PE_7/D_7 to PE_0/D_0	In 8-bit bus mode: I/O port In 16-bit bus mode: data bus input/output			I/O port

Port	Description	Pins	Mode 4*3	Mode 5*3	Mode 6	Mode 7
Port F	• 8-bit I/O port	PF_7/ø	When DDR = 0: input port When DDR = 1 (after reset): ø output			When DDR = 0 (after reset): input port When DDR = 1: ø output
		PF_6/$\overline{AS}$ PF_5/$\overline{RD}$ PF_4/$\overline{HWR}$ PF_3/$\overline{LWR}$	$\overline{AS}$, $\overline{RD}$, $\overline{HWR}$, $\overline{LWR}$ output			I/O port
		PF_2/$\overline{LCAS}$/$\overline{WAIT}$/$\overline{BREQO}$	When WAITE = 0 and BREQOE = 0 (after reset): I/O port When WAITE = 1 and BREQOE = 0: $\overline{WAIT}$ input When WAITE = 0 and BREQOE = 1: $\overline{BREQO}$ output When RMTS2 to RMTS0= B'001 to B'011, CW2= 0, and LCASS= 0: $\overline{LCAS}$ output			
		PF_1/$\overline{BACK}$ PF_0/$\overline{BREQ}$	When BRLE = 0 (after reset): I/O port When BRLE = 1: $\overline{BREQ}$ input, $\overline{BACK}$ output			
Port G	• 5-bit I/O port	PG_4/$\overline{CS0}$	When DDR = 0*1: input port When DDR = 1*2: $\overline{CS0}$ output			I/O port
		PG_3/$\overline{CS1}$ PG_2/$\overline{CS2}$ PG_1/$\overline{CS3}$	When DDR = 0 (after reset): input port When DDR = 1: $\overline{CS1}$, $\overline{CS2}$, $\overline{CS3}$ output			
		PG_0/$\overline{CAS}$	DRAM space set: $\overline{CAS}$ output Otherwise (after reset): I/O port			

Notes: 1. After a reset in mode 6
2. After a reset in mode 4 or 5
3. In ROMless version, only modes 4 and 5 are available.
4. Applies to the on-chip ROM version only.

9.2 Port 1

9.2.1 Overview

Port 1 is an 8-bit I/O port. Port 1 pins also function as PPG output pins (PO15 to PO8), TPU I/O pins (TCLKA, TCLKB, TCLKC, TCLKD, TIOCA0, TIOCB0, TIOCC0, TIOCD0, TIOCA1, TIOCB1, TIOCA2, and TIOCB2), and DMAC output pins ($\overline{\text{DACK0}}$ and $\overline{\text{DACK1}}$). Port 1 pin functions are the same in all operating modes.

Figure 9-1 shows the port 1 pin configuration.

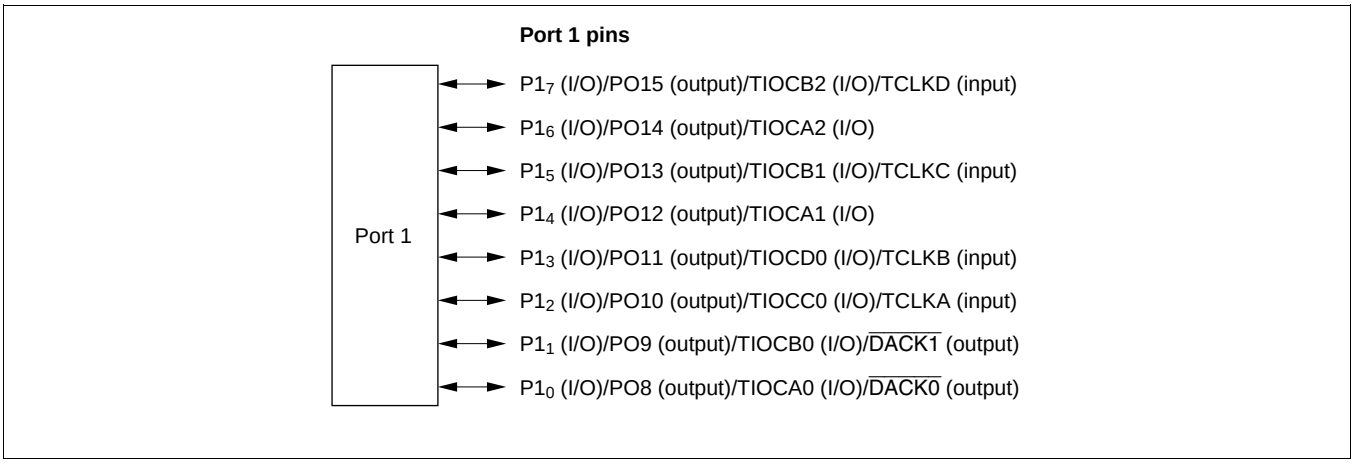

Figure 9-1 Port 1 Pin Functions

9.2.2 Register Configuration

Table 9-2 shows the port 1 register configuration.

Table 9-2 Port 1 Registers

Name	Abbreviation	R/W	Initial Value	Address*
Port 1 data direction register	P1DDR	W	H'00	H'FEB0
Port 1 data register	P1DR	R/W	H'00	H'FF60
Port 1 register	PORT1	R	Undefined	H'FF50

Note: * Lower 16 bits of the address.

Port 1 Data Direction Register (P1DDR)

Bit :	7	6	5	4	3	2	1	0
	P17DDR	P16DDR	P15DDR	P14DDR	P13DDR	P12DDR	P11DDR	P10DDR
Initial value :	0	0	0	0	0	0	0	0
R/W :	W	W	W	W	W	W	W	W

P1DDR is an 8-bit write-only register, the individual bits of which specify input or output for the pins of port 1. P1DDR cannot be read; if it is, an undefined value will be read.

Setting a P1DDR bit to 1 makes the corresponding port 1 pin an output pin, while clearing the bit to 0 makes the pin an input pin.

P1DDR is initialized to H'00 by a power-on reset, and in hardware standby mode. It retains its prior state after a manual reset*, and in software standby mode. As the PPG, TPU, and DMAC are initialized by a manual reset*, the pin states are determined by the P1DDR and P1DR specifications.

Note: * Manual reset is only supported in the H8S/2357 ZTAT.

Port 1 Data Register (P1DR)

Bit :	7	6	5	4	3	2	1	0
	P17DR	P16DR	P15DR	P14DR	P13DR	P12DR	P11DR	P10DR
Initial value :	0	0	0	0	0	0	0	0
R/W :	R/W	R/W	R/W	R/W	R/W	R/W	R/W	R/W

P1DR is an 8-bit readable/writable register that stores output data for the port 1 pins ($P1_7$ to $P1_0$).

P1DR is initialized to H'00 by a power-on reset, and in hardware standby mode. It retains its prior state after a manual reset*, and in software standby mode.

Note: * Manual reset is only supported in the H8S/2357 ZTAT.

Port 1 Register (PORT1)

Bit :	7	6	5	4	3	2	1	0
	P17	P16	P15	P14	P13	P12	P11	P10
Initial value :	—*	—*	—*	—*	—*	—*	—*	—*
R/W :	R	R	R	R	R	R	R	R

Note: * Determined by state of pins $P1_7$ to $P1_0$.

PORT1 is an 8-bit read-only register that shows the pin states. It cannot be written to. Writing of output data for the port 1 pins ($P1_7$ to $P1_0$) must always be performed on P1DR.

If a port 1 read is performed while P1DDR bits are set to 1, the P1DR values are read. If a port 1 read is performed while P1DDR bits are cleared to 0, the pin states are read.

After a power-on reset and in hardware standby mode, PORT1 contents are determined by the pin states, as P1DDR and P1DR are initialized. PORT1 retains its prior state after a manual reset*, and in software standby mode.

Note: * Manual reset is only supported in the H8S/2357 ZTAT.

9.2.3 Pin Functions

Port 1 pins also function as PPG output pins (PO15 to PO8), TPU I/O pins (TCLKA, TCLKB, TCLKC, TCLKD, TIOCA0, TIOCB0, TIOCC0, TIOCD0, TIOCA1, TIOCB1, TIOCA2, and TIOCB2), and DMAC output pins ($\overline{\text{DACK0}}$ and $\overline{\text{DACK1}}$). Port 1 pin functions are shown in table 9-3.

Table 9-3 Port 1 Pin Functions

<table>
<tr><th>Pin</th><th>Selection Method and Pin Functions</th></tr>
<tr><td>$P1_7$/PO15/TIOCB2/TCLKD</td><td>The pin function is switched as shown below according to the combination of the TPU channel 2 setting by bits MD3 to MD0 in TMDR2, bits IOB3 to IOB0 in TIOR2, bits CCLR1 and CCLR0 in TCR2, bits TPSC2 to TPSC0 in TCR0 and TCR5, bit NDER15 in NDERH, and bit P17DDR.
<table>
<tr><td>TPU Channel 2 Setting</td><td>Table Below (1)</td><td colspan="3">Table Below (2)</td></tr>
<tr><td>P17DDR</td><td>—</td><td>0</td><td>1</td><td>1</td></tr>
<tr><td>NDER15</td><td>—</td><td>—</td><td>0</td><td>1</td></tr>
<tr><td rowspan="3">Pin function</td><td rowspan="2">TIOCB2 output</td><td>$P1_7$ input</td><td>$P1_7$ output</td><td>PO15 output</td></tr>
<tr><td colspan="3">TIOCB2 input *1</td></tr>
<tr><td colspan="4">TCLKD input *2</td></tr>
</table>
Notes: 1. TIOCB2 input when MD3 to MD0 = B'0000, B'01××, and IOB3 = 1.
2. TCLKD input when the setting for either TCR0 or TCR5 is: TPSC2 to TPSC0 = B'111.
TCLKD input when channels 2 and 4 are set to phase counting mode.
<table>
<tr><td>TPU Channel 2 Setting</td><td>(2)</td><td>(1)</td><td>(2)</td><td>(2)</td><td>(1)</td><td>(2)</td></tr>
<tr><td>MD3 to MD0</td><td colspan="2">B'0000, B'01××</td><td>B'0010</td><td colspan="3">B'0011</td></tr>
<tr><td>IOB3 to IOB0</td><td>B'0000
B'0100
B'1×××</td><td>B'0001 to B'0011
B'0101 to B'0111</td><td>—</td><td>B'××00</td><td colspan="2">Other than B'××00</td></tr>
<tr><td>CCLR1, CCLR0</td><td>—</td><td>—</td><td>—</td><td>—</td><td>Other than B'10</td><td>B'10</td></tr>
<tr><td>Output function</td><td>—</td><td>Output compare output</td><td>—</td><td>—</td><td>PWM mode 2 output</td><td>—</td></tr>
</table>
×: Don't care</td></tr>
</table>

Pin	Selection Method and Pin Functions
$P1_6$/PO14/TIOCA2	The pin function is switched as shown below according to the combination of the TPU channel 2 setting by bits MD3 to MD0 in TMDR2, bits IOA3 to IOA0 in TIOR2, bits CCLR1 and CCLR0 in TCR2, bit NDER14 in NDERH, and bit P16DDR.

TPU Channel 2 Setting	Table Below (1)	Table Below (2)		
P16DDR	—	0	1	1
NDER14	—	—	0	1
Pin function	TIOCA2 output	$P1_6$ input	$P1_6$ output	PO14 output
		TIOCA2 input *1		

Note: 1. TIOCA2 input when MD3 to MD0 = B'0000, B'01××, and IOA3 = 1.

TPU Channel 2 Setting	(2)	(1)	(2)	(1)	(1)	(2)
MD3 to MD0	B'0000, B'01××		B'001×	B'0011	B'0011	
IOA3 to IOA0	B'0000 B'0100 B'1×××	B'0001 to B'0011 B'0101 to B'0111	B'××00	Other than B'××00		
CCLR1, CCLR0	—	—	—	—	Other than B'01	B'01
Output function	—	Output compare output	—	PWM mode 1 output *2	PWM mode 2 output	—

×: Don't care

Note: 2. TIOCB2 output is disabled.

Pin	Selection Method and Pin Functions
$P1_5$/PO13/TIOCB1/TCLKC	The pin function is switched as shown below according to the combination of the TPU channel 1 setting by bits MD3 to MD0 in TMDR1, bits IOB3 to IOB0 in TIOR1, bits CCLR1 and CCLR0 in TCR1, bits TPSC2 to TPSC0 in TCR0, TCR2, TCR4, and TCR5, bit NDER13 in NDERH, and bit P15DDR.

TPU Channel 1 Setting	Table Below (1)	Table Below (2)		
P15DDR	—	0	1	1
NDER13	—	—	0	1
Pin function	TIOCB1 output	$P1_5$ input	$P1_5$ output	PO13 output
		TIOCB1 input *1		
	TCLKC input *2			

Notes: 1. TIOCB1 input when MD3 to MD0 = B'0000, B'01×× and IOB3 to IOB0 = B'10××.
2. TCLKC input when the setting for either TCR0 or TCR2 is: TPSC2 to TPSC0 = B'110; or when the setting for either TCR4 or TCR5 is TPSC2 to TPSC0 = B'101.
TCLKC input when channels 2 and 4 are set to phase counting mode.

TPU Channel 1 Setting	(2)	(1)	(2)	(2)	(1)	(2)
MD3 to MD0	B'0000, B'01××		B'0010	B'0011		
IOB3 to IOB0	B'0000 B'0100 B'1×××	B'0001 to B'0011 B'0101 to B'0111	—	B'××00	Other than B'××00	
CCLR1, CCLR0	—	—	—	—	Other than B'10	B'10
Output function	—	Output compare output	—	—	PWM mode 2 output	—

×: Don't care

Pin	Selection Method and Pin Functions
$P1_4$/PO12/TIOCA1	The pin function is switched as shown below according to the combination of the TPU channel 1 setting by bits MD3 to MD0 in TMDR1, bits IOA3 to IOA0 in TIOR1, bits CCLR1 and CCLR0 in TCR1, bit NDER12 in NDERH, and bit P14DDR.

TPU Channel 1 Setting	Table Below (1)	Table Below (2)		
P14DDR	—	0	1	1
NDER12	—	—	0	1
Pin function	TIOCA1 output	$P1_4$ input	$P1_4$ output	PO12 output
		TIOCA1 input *1		

Note: 1. TIOCA1 input when MD3 to MD0 = B'0000, B'01××, IOA3 to IOA0 = B'10××.

TPU Channel 1 Setting	(2)	(1)	(2)	(1)	(1)	(2)
MD3 to MD0	B'0000, B'01××		B'001×	B'0010	B'0011	
IOA3 to IOA0	B'0000 B'0100 B'1×××	B'0001 to B'0011 B'0101 to B'0111	B'××00	Other than B'××00	Other than B'××00	
CCLR1, CCLR0	—	—	—	—	Other than B'01	B'01
Output function	—	Output compare output	—	PWM mode 1 output*2	PWM mode 2 output	—

×: Don't care

Note: 2. TIOCB1 output is disabled.

Pin	Selection Method and Pin Functions
$P1_3$/PO11/TIOCD0/TCLKB	The pin function is switched as shown below according to the combination of the TPU channel 0 setting by bits MD3 to MD0 in TMDR0, bits IOD3 to IOD0 in TIOR0L, bits CCLR2 to CCLR0 in TCR0, bits TPSC2 to TPSC0 in TCR0 to TCR2, bit NDER11 in NDERH, and bit P13DDR.

TPU Channel 0 Setting	Table Below (1)	Table Below (2)		
P13DDR	—	0	1	1
NDER11	—	—	0	1
Pin function	TIOCD0 output	$P1_3$ input	$P1_3$ output	PO11 output
		TIOCD0 input *1		
	TCLKB input *2			

Notes: 1. TIOCD0 input when MD3 to MD0 = B'0000, IOD3 to IOD0 =B'10××.
2. TCLKB input when the setting for TCR0 to TCR2 is: TPSC2 to TPSC0 = B'101;
TCLKB input when channels 1 and 5 are set to phase counting mode.

TPU Channel 0 Setting	(2)	(1)	(2)	(2)	(1)	(2)
MD3 to MD0	B'0000		B'0010	B'0011		
IOD3 to IOD0	B'0000 B'0100 B'1×××	B'0001 to B'0011 B'0101 to B'0111	—	B'××00	Other than B'××00	
CCLR2 to CCLR0	—	—	—	—	Other than B'110	B'110
Output function	—	Output compare output	—	—	PWM mode 2 output	—

×: Don't care

Pin	Selection Method and Pin Functions
$P1_2$/PO10/TIOCC0/TCLKA	The pin function is switched as shown below according to the combination of the TPU channel 0 setting by bits MD3 to MD0 in TMDR0, bits IOC3 to IOC0 in TIOR0L, bits CCLR2 to CCLR0 in TCR0, bits TPSC2 to TPSC0 in TCR0 to TCR5, bit NDER10 in NDERH, and bit P12DDR.

TPU Channel 0 Setting	Table Below (1)	Table Below (2)		
P12DDR	—	0	1	1
NDER10	—	—	0	1
Pin function	TIOCC0 output	$P1_2$ input	$P1_2$ output	PO10 output
		TIOCC0 input *1		
	TCLKA input *2			

Notes: 1. TIOCC0 input when MD3 to MD0 = B'0000, and IOC3 to IOC0 = B'10××.
2. TCLKA input when the setting for TCR0 to TCR5 is: TPSC2 to TPSC0 = B'100;
TCLKA input when channels 1 and 5 are set to phase counting mode.

TPU Channel 0 Setting	(2)	(1)	(2)	(1)	(1)	(2)
MD3 to MD0	B'0000		B'001×	B'0010	B'0011	
IOC3 to IOC0	B'0000 B'0100 B'1×××	B'0001 to B'0011 B'0101 to B'0111	B'××00	Other than B'××00		
CCLR2 to CCLR0	—	—	—	—	Other than B'101	B'101
Output function	—	Output compare output	—	PWM mode 1 output*3	PWM mode 2 output	—

×: Don't care

Note: 3. TIOCD0 output is disabled.
When BFA = 1 or BFB = 1 in TMDR0, output is disabled and setting (2) applies.

Pin	Selection Method and Pin Functions
$P1_1$/PO9/TIOCB0/$\overline{DACK1}$	The pin function is switched as shown below according to the combination of the TPU channel 0 setting by bits MD3 to MD0 in TMDR0, bits IOB3 to IOB0 in TIOR0H, bits CCLR2 to CCLR0 in TCR0, bit NDER9 in NDERH, bit SAE1 in DMABCRH, and bit P11DDR.

SAE1	0				1
TPU Channel 0 Setting	Table Below (1)	Table Below (2)			
P11DDR	—	0	1	1	—
NDER9	—	—	0	1	—
Pin function	TIOCB0 output	$P1_1$ input	$P1_1$ output	PO9 output	$\overline{DACK1}$ output
		TIOCB0 input *			

Note: * TIOCB0 input when MD3 to MD0 = B'0000, and IOB3 to IOB0 = B'10××.

TPU Channel 0 Setting	(2)	(1)	(2)	(2)	(1)	(2)
MD3 to MD0	B'0000		B'0010	B'0011		
IOB3 to IOB0	B'0000 B'0100 B'1×××	B'0001 to B'0011 B'0101 to B'0111	—	B'××00	Other than B'××00	
CCLR2 to CCLR0	—	—	—	—	Other than B'010	B'010
Output function	—	Output compare output	—	—	PWM mode 2 output	—

×: Don't care

Pin	Selection Method and Pin Functions
$P1_0$/PO8/TIOCA0/ $\overline{DACK0}$	The pin function is switched as shown below according to the combination of the TPU channel 0 setting by bits MD3 to MD0 in TMDR0, bits IOA3 to IOA0 in TIOR0H, bits CCLR2 to CCLR0 in TCR0, bit NDER8 in NDERH, bit SAE0 in DMABCRH, and bit P10DDR.

SAE0	0				1
TPU Channel 0 Setting	Table Below (1)	Table Below (2)			—
P10DDR	—	0	1	1	—
NDER8	—	—	0	1	—
Pin function	TIOCA0 output	$P1_0$ input	$P1_0$ output	PO8 output	$\overline{DACK0}$ output
		TIOCA0 input *1			

Note: 1. TIOCA0 input when MD3 to MD0 = B'0000, and IOA3 to IOA0 = B'10××.

TPU Channel 0 Setting	(2)	(1)	(2)	(1)	(1)	(2)
MD3 to MD0	B'0000		B'001×	B'0010	B'0011	
IOA3 to IOA0	B'0000 B'0100 B'1×××	B'0001 to B'0011 B'0101 to B'0111	B'××00	Other than B'××00		
CCLR2 to CCLR0	—	—	—	—	Other than B'001	B'001
Output function	—	Output compare output	—	PWM mode 1 output*2	PWM mode 2 output	—

×: Don't care

Note: 2. TIOCB0 output is disabled.

9.3 Port 2

9.3.1 Overview

Port 2 is an 8-bit I/O port. Port 2 pins also function as PPG output pins (PO7 to PO0), TPU I/O pins (TIOCA3, TIOCB3, TIOCC3, TIOCD3, TIOCA4, TIOCB4, TIOCA5, and TIOCB5) and 8-bit timer I/O pins (TMRI0, TMCI0, TMO0, TMRI1, TMCI1, and TMO1). Port 2 pin functions are the same in all operating modes. Port 2 uses Schmitt-triggered input.

Figure 9-2 shows the port 2 pin configuration.

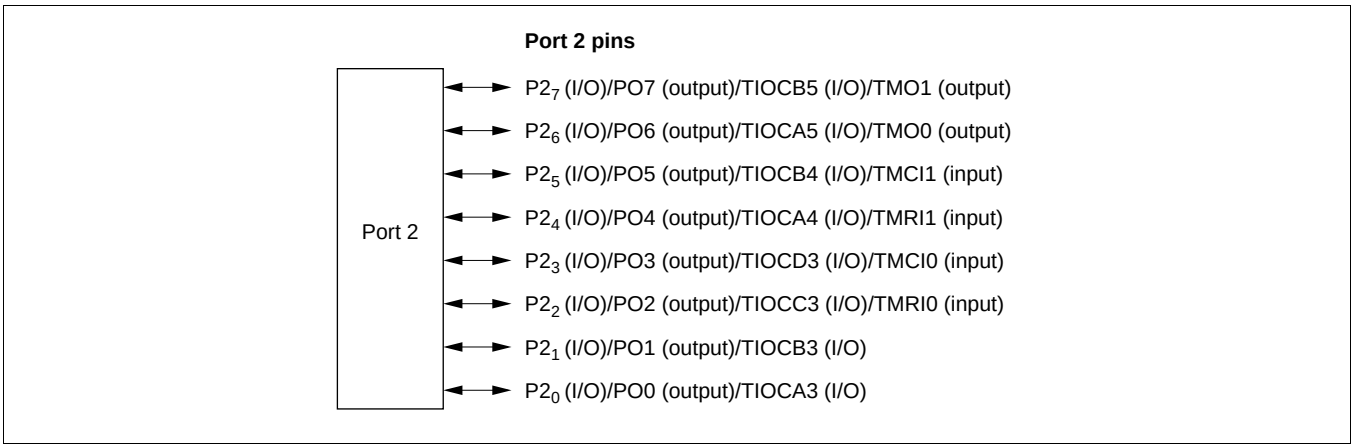

Figure 9-2 Port 2 Pin Functions

9.3.2 Register Configuration

Table 9-4 shows the port 2 register configuration.

Table 9-4 Port 2 Registers

Name	Abbreviation	R/W	Initial Value	Address*
Port 2 data direction register	P2DDR	W	H'00	H'FEB1
Port 2 data register	P2DR	R/W	H'00	H'FF61
Port 2 register	PORT2	R	Undefined	H'FF51

Note: * Lower 16 bits of the address.

Port 2 Data Direction Register (P2DDR)

Bit	:	7	6	5	4	3	2	1	0
		P27DDR	P26DDR	P25DDR	P24DDR	P23DDR	P22DDR	P21DDR	P20DDR
Initial value	:	0	0	0	0	0	0	0	0
R/W	:	W	W	W	W	W	W	W	W

P2DDR is an 8-bit write-only register, the individual bits of which specify input or output for the pins of port 2. P2DDR cannot be read; if it is, an undefined value will be read.

Setting a P2DDR bit to 1 makes the corresponding port 2 pin an output pin, while clearing the bit to 0 makes the pin an input pin.

P2DDR is initialized to H'00 by a power-on reset, and in hardware standby mode. It retains its prior state after a manual reset*, and in software standby mode. As the PPG, TPU, and 8-bit timer are initialized by a manual reset*, the pin states are determined by the P2DDR and P2DR specifications.

Note: * Manual reset is only supported in the H8S/2357 ZTAT.

Port 2 Data Register (P2DR)

Bit :	7	6	5	4	3	2	1	0
	P27DR	P26DR	P25DR	P24DR	P23DR	P22DR	P21DR	P20DR
Initial value :	0	0	0	0	0	0	0	0
R/W :	R/W	R/W	R/W	R/W	R/W	R/W	R/W	R/W

P2DR is an 8-bit readable/writable register that stores output data for the port 2 pins ($P2_7$ to $P2_0$).

P2DR is initialized to H'00 by a power-on reset, and in hardware standby mode. It retains its prior state after a manual reset*, and in software standby mode.

Note: * Manual reset is only supported in the H8S/2357 ZTAT.

Port 2 Register (PORT2)

Bit :	7	6	5	4	3	2	1	0
	P27	P26	P25	P24	P23	P22	P21	P20
Initial value :	—*	—*	—*	—*	—*	—*	—*	—*
R/W :	R	R	R	R	R	R	R	R

Note: * Determined by state of pins $P2_7$ to $P2_0$.

PORT2 is an 8-bit read-only register that shows the pin states. It cannot be written to. Writing of output data for the port 2 pins ($P2_7$ to $P2_0$) must always be performed on P2DR.

If a port 2 read is performed while P2DDR bits are set to 1, the P2DR values are read. If a port 2 read is performed while P2DDR bits are cleared to 0, the pin states are read.

After a power-on reset and in hardware standby mode, PORT2 contents are determined by the pin states, as P2DDR and P2DR are initialized. PORT2 retains its prior state after a manual reset*, and in software standby mode.

Note: * Manual reset is only supported in the H8S/2357 ZTAT.

9.3.3 Pin Functions

Port 2 pins also function as PPG output pins (PO7 to PO0) and TPU I/O pins (TIOCA3, TIOCB3, TIOCC3, TIOCD3, TIOCA4, TIOCB4, TIOCA5, and TIOCB5), and 8-bit timer I/O pins (TMRI0, TMCI0, TMO0, TMRI1, TMCI1, and TMO1). Port 2 pin functions are shown in table 9-5.

Table 9-5 Port 2 Pin Functions

<table>
<tr><th>Pin</th><th>Selection Method and Pin Functions</th></tr>
<tr><td>$P2_7$/PO7/TIOCB5/TMO1</td><td>The pin function is switched as shown below according to the combination of the TPU channel 5 setting by bits MD3 to MD0 in TMDR5, bits IOB3 to IOB0 in TIOR5, bits CCLR1 and CCLR0 in TCR5, bit NDER7 in NDERL, bits OS3 to OS0 in TCSR1, and bit P27DDR.
<table>
<tr><td>OS3 to OS0</td><td colspan="4">All 0</td><td>Any 1</td></tr>
<tr><td>TPU Channel 5 Setting</td><td>Table Below (1)</td><td colspan="3">Table Below (2)</td><td>—</td></tr>
<tr><td>P27DDR</td><td>—</td><td>0</td><td>1</td><td>1</td><td>—</td></tr>
<tr><td>NDER7</td><td>—</td><td>—</td><td>0</td><td>1</td><td>—</td></tr>
<tr><td rowspan="2">Pin function</td><td rowspan="2">TIOCB5 output</td><td>$P2_7$ input</td><td>$P2_7$ output</td><td>PO7 output</td><td>TMO1 output</td></tr>
<tr><td colspan="4">TIOCB5 input *</td></tr>
</table>
Note: * TIOCB5 input when MD3 to MD0 = B'0000, B'01××, and IOB3 = 1.
<table>
<tr><td>TPU Channel 5 Setting</td><td>(2)</td><td>(1)</td><td>(2)</td><td>(2)</td><td>(1)</td><td>(2)</td></tr>
<tr><td>MD3 to MD0</td><td colspan="2">B'0000, B'01××</td><td>B'0010</td><td colspan="3">B'0011</td></tr>
<tr><td>IOB3 to IOB0</td><td>B'0000
B'0100
B'1×××</td><td>B'0001 to B'0011
B'0101 to B'0111</td><td>—</td><td>B'××00</td><td colspan="2">Other than B'××00</td></tr>
<tr><td>CCLR1, CCLR0</td><td>—</td><td>—</td><td>—</td><td>—</td><td>Other than B'10</td><td>B'10</td></tr>
<tr><td>Output function</td><td>—</td><td>Output compare output</td><td>—</td><td>—</td><td>PWM mode 2 output</td><td>—</td></tr>
</table>
×: Don’t care</td></tr>
</table>

Pin	Selection Method and Pin Functions
$P2_6$/PO6/TIOCA5/TMO0	The pin function is switched as shown below according to the combination of the TPU channel 5 setting by bits MD3 to MD0 in TMDR5, bits IOA3 to IOA0 in TIOR5, bits CCLR1 and CCLR0 in TCR5, bit NDER6 in NDERL, bits OS3 to OS0 in TCSR0, and bit P26DDR.

OS3 to OS0	All 0				Any 1
TPU Channel 5 Setting	Table Below (1)	Table Below (2)			—
P26DDR	—	0	1	1	—
NDER6	—	—	0	1	—
Pin function	TIOCA5 output	$P2_6$ input	$P2_6$ output	PO6 output	TMO0 output
		TIOCA5 input *1			

Note: 1. TIOCA5 input when MD3 to MD0 = B'0000, B'01××, and IOA3 = 1.

TPU Channel 5 Setting	(2)	(1)	(2)	(1)	(1)	(2)
MD3 to MD0	B'0000, B'01××		B'001×	B'0010	B'0011	
IOA3 to IOA0	B'0000 B'0100 B'1×××	B'0001 to B'0011 B'0101 to B'0111	B'××00	Other than B'××00		
CCLR1, CCLR0	—	—	—	—	Other than B'01	B'01
Output function	—	Output compare output	—	PWM mode 1 output*2	PWM mode 2 output	—

×: Don't care

Note: 2. TIOCB5 output is disabled.

Pin	Selection Method and Pin Functions
$P2_5$/PO5/TIOCB4/TMCI1	This pin is used as the 8-bit timer external clock input pin when external clock is selected with bits CKS2 to CKS0 in TCR1. The pin function is switched as shown below according to the combination of the TPU channel 4 setting by bits MD3 to MD0 in TMDR4 and bits IOB3 to IOB0 in TIOR4, bits CCLR1 and CCLR0 in TCR4, bit NDER5 in NDERL, and bit P25DDR.

TPU Channel 4 Setting	Table Below (1)	Table Below (2)		
P25DDR	—	0	1	1
NDER5	—	—	0	1
Pin function	TIOCB4 output	$P2_5$ input	$P2_5$ output	PO5 output
		TIOCB4 input *		
	TMCI1 input			

Note: * TIOCB4 input when MD3 to MD0 = B'0000, B'01××, and IOB3 to IOB0 = B'10××.

TPU Channel 4 Setting	(2)	(1)	(2)	(2)	(1)	(2)
MD3 to MD0	B'0000, B'01××		B'0010	B'0011		
IOB3 to IOB0	B'0000 B'0100 B'1×××	B'0001 to B'0011 B'0101 to B'0111	—	B'××00	Other than B'××00	
CCLR1, CCLR0	—	—	—	—	Other than B'10	B'10
Output function	—	Output compare output	—	—	PWM mode 2 output	—

×: Don't care

Pin	Selection Method and Pin Functions
$P2_4$/PO4/TIOCA4/ TMRI1	This pin is used as the 8-bit timer counter reset pin when bits CCLR1 and CCLR0 in TCR1 are both set to 1.

The pin function is switched as shown below according to the combination of the TPU channel 4 setting by bits MD3 to MD0 in TMDR4, bits IOA3 to IOA0 in TIOR4, bits CCLR1 and CCLR0 in TCR4, bit NDER4 in NDERL, and bit P24DDR.

TPU Channel 4 Setting	Table Below (1)	Table Below (2)		
P24DDR	—	0	1	1
NDER4	—	—	0	1
Pin function	TIOCA4 output	$P2_4$ input	$P2_4$ output	PO4 output
		TIOCA4 input *1		
	TMRI1 input			

Note: 1. TIOCA4 input when MD3 to MD0 = B'0000, B'01××, and IOA3 to IOA0 = B'10××.

TPU Channel 4 Setting	(2)	(1)	(2)	(1)	(1)	(2)
MD3 to MD0	B'0000, B'01××		B'001×	B'0010	B'0011	
IOA3 to IOA0	B'0000 B'0100 B'1×××	B'0001 to B'0011 B'0101 to B'0111	B'××00	Other than B'××00		
CCLR1, CCLR0	—	—	—	—	Other than B'01	B'01
Output function	—	Output compare output	—	PWM mode 1 output*2	PWM mode 2 output	—

×: Don't care

Note: 2. TIOCB4 output is disabled.

Pin	Selection Method and Pin Functions
$P2_3$/PO3/TIOCD3/TMCI0	This pin is used as the 8-bit timer external clock input pin when external clock is selected with bits CKS2 to CKS0 in TCR0. The pin function is switched as shown below according to the combination of the TPU channel 3 setting by bits MD3 to MD0 in TMDR3, bits IOD3 to IOD0 in TIOR3L, bits CCLR2 to CCLR0 in TCR3, bit NDER3 in NDERL, and bit P23DDR.

TPU Channel 3 Setting	Table Below (1)	Table Below (2)		
P23DDR	—	0	1	1
NDER3	—	—	0	1
Pin function	TIOCD3 output	$P2_3$ input	$P2_3$ output	PO3 output
		TIOCD3 input *		
	TMCI0 input			

Note: * TIOCD3 input when MD3 to MD0 = B'0000, and IOD3 to IOD0 = B'10××.

TPU Channel 3 Setting	(2)	(1)	(2)	(2)	(1)	(2)
MD3 to MD0	B'0000		B'0010	B'0011		
IOD3 to IOD0	B'0000 B'0100 B'1×××	B'0001 to B'0011 B'0101 to B'0111	—	B'××00	Other than B'××00	
CCLR2 to CCLR0	—	—	—	—	Other than B'110	B'110
Output function	—	Output compare output	—	—	PWM mode 2 output	—

×: Don't care

Pin	Selection Method and Pin Functions
$P2_2$/PO2/TIOCC3/TMRI0	This pin is used as the 8-bit timer counter reset pin when bits CCLR1 and CCLR0 in TCR0 are both set to 1. The pin function is switched as shown below according to the combination of the TPU channel 3 setting by bits MD3 to MD0 in TMDR3, bits IOC3 to IOC0 in TIOR3L, bits CCLR2 to CCLR0 in TCR3, bit NDER2 in NDERL, and bit P22DDR.

TPU Channel 3 Setting	Table Below (1)	Table Below (2)		
P22DDR	—	0	1	1
NDER2	—	—	0	1
Pin function	TIOCC3 output	$P2_2$ input	$P2_2$ output	PO2 output
		TIOCC3 input *1		
	TMRI0 input			

Note: 1. TIOCC3 input when MD3 to MD0 = B'0000, and IOC3 to IOC0 = B'10××.

TPU Channel 3 Setting	(2)	(1)	(2)	(1)	(1)	(2)
MD3 to MD0	B'0000		B'001×	B'0010	B'0011	
IOC3 to IOC0	B'0000 B'0100 B'1×××	B'0001 to B'0011 B'0101 to B'0111	B'××00	Other than B'××00		
CCLR2 to CCLR0	—	—	—	—	Other than B'101	B'101
Output function	—	Output compare output	—	PWM mode 1 output*2	PWM mode 2 output	—

×: Don't care

Note: 2. TIOCD3 output is disabled.
When BFA = 1 or BFB = 1 in TMDR3, output is disabled and setting (2) applies.

Pin	Selection Method and Pin Functions
$P2_1$/PO1/TIOCB3	The pin function is switched as shown below according to the combination of the TPU channel 3 setting by bits MD3 to MD0 in TMDR3, bits IOB3 to IOB0 in TIOR3H, bits CCLR2 to CCLR0 in TCR3, bit NDER1 in NDERL, and bit P21DDR.

TPU Channel 3 Setting	Table Below (1)	Table Below (2)		
P21DDR	—	0	1	1
NDER1	—	—	0	1
Pin function	TIOCB3 output	$P2_1$ input	$P2_1$ output	PO1 output
		TIOCB3 input *		

Note: * TIOCB3 input when MD3 to MD0 = B'0000, and IOB3 to IOB0 = B'10××.

TPU Channel 3 Setting	(2)	(1)	(2)	(2)	(1)	(2)
MD3 to MD0	B'0000		B'0010	B'0011		
IOB3 to IOB0	B'0000 B'0100 B'1×××	B'0001 to B'0011 B'0101 to B'0111	—	B'××00	Other than B'××00	
CCLR2 to CCLR0	—	—	—	—	Other than B'010	B'010
Output function	—	Output compare output	—	—	PWM mode 2 output	—

×: Don't care

Pin	Selection Method and Pin Functions
$P2_0$/PO0/TIOCA3	The pin function is switched as shown below according to the combination of the TPU channel 3 setting by bits MD3 to MD0 in TMDR3, bits IOA3 to IOA0 in TIOR3H, bits CCLR2 to CCLR0 in TCR3, bit NDER0 in NDERL, and bit P20DDR.

TPU Channel 3 Setting	Table Below (1)	Table Below (2)		
P20DDR	—	0	1	1
NDER0	—	—	0	1
Pin function	TIOCA3 output	$P2_0$ input	$P2_0$ output	PO0 output
		TIOCA3 input *1		

Note: 1. TIOCA3 input when MD3 to MD0 = B'0000, and IOA3 to IOA0 = B'10××.

TPU Channel 3 Setting	(2)	(1)	(2)	(1)	(1)	(2)
MD3 to MD0	B'0000		B'001×	B'0010	B'0011	
IOA3 to IOA0	B'0000 B'0100 B'1×××	B'0001 to B'0011 B'0101 to B'0111	B'××00	Other than B'××00		
CCLR2 to CCLR0	—	—	—	—	Other than B'001	B'001
Output function	—	Output compare output	—	PWM mode 1 output*2	PWM mode 2 output	—

×: Don't care

Note: 2. TIOCB3 output is disabled.

9.4 Port 3

9.4.1 Overview

Port 3 is a 6-bit I/O port. Port 3 pins also function as SCI I/O pins (TxD0, RxD0, SCK0, TxD1, RxD1, and SCK1). Port 3 pin functions are the same in all operating modes.

Figure 9-3 shows the port 3 pin configuration.

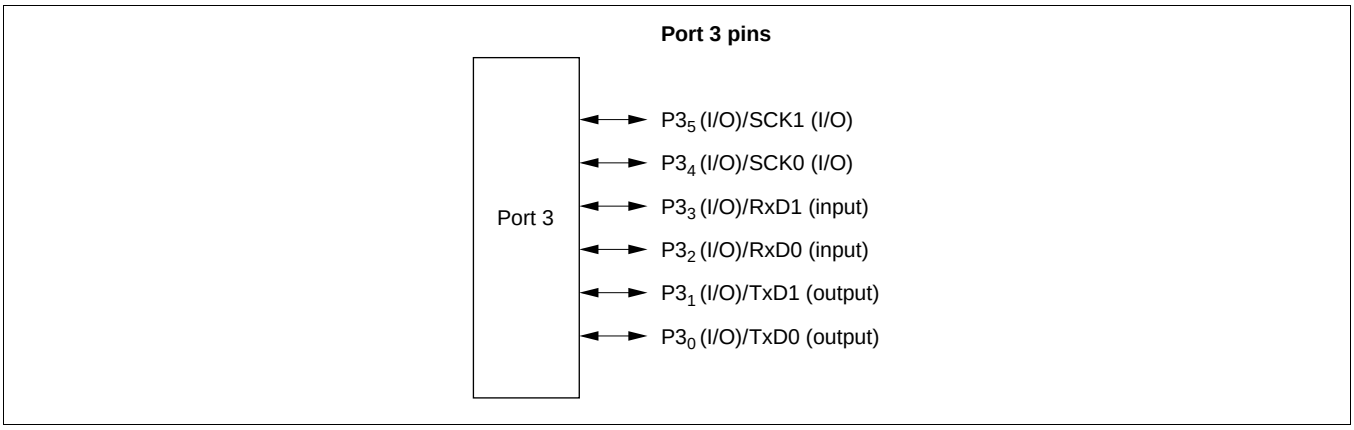

Figure 9-3 Port 3 Pin Functions

9.4.2 Register Configuration

Table 9-6 shows the port 3 register configuration.

Table 9-6 Port 3 Registers

Name	Abbreviation	R/W	Initial Value*[2]	Address*[1]
Port 3 data direction register	P3DDR	W	H'00	H'FEB2
Port 3 data register	P3DR	R/W	H'00	H'FF62
Port 3 register	PORT3	R	Undefined	H'FF52
Port 3 open drain control register	P3ODR	R/W	H'00	H'FF76

Notes: 1. Lower 16 bits of the address.
2. Value of bits 5 to 0.

Port 3 Data Direction Register (P3DDR)

Bit :	7	6	5	4	3	2	1	0
	—	—	P35DDR	P34DDR	P33DDR	P32DDR	P31DDR	P30DDR
Initial value :	Undefined	Undefined	0	0	0	0	0	0
R/W :	—	—	W	W	W	W	W	W

P3DDR is an 8-bit write-only register, the individual bits of which specify input or output for the pins of port 3. Bits 7 and 6 are reserved. P3DDR cannot be read; if it is, an undefined value will be read.

Setting a P3DDR bit to 1 makes the corresponding port 3 pin an output pin, while clearing the bit to 0 makes the pin an input pin.

P3DDR is initialized to H'00 (bits 5 to 0) by a power-on reset, and in hardware standby mode. It retains its prior state after a manual reset*, and in software standby mode. As the SCI is initialized, the pin states are determined by the P3DDR and P3DR specifications.

Note: * Manual reset is only supported in the H8S/2357 ZTAT.

Port 3 Data Register (P3DR)

Bit :	7	6	5	4	3	2	1	0
	—	—	P35DR	P34DR	P33DR	P32DR	P31DR	P30DR
Initial value :	Undefined	Undefined	0	0	0	0	0	0
R/W :	—	—	R/W	R/W	R/W	R/W	R/W	R/W

P3DR is an 8-bit readable/writable register that stores output data for the port 3 pins ($P3_5$ to $P3_0$).

Bits 7 and 6 are reserved; they return an undetermined value if read, and cannot be modified.

P3DR is initialized to H'00 (bits 5 to 0) by a power-on reset, and in hardware standby mode. It retains its prior state after a manual reset*, and in software standby mode.

Note: * Manual reset is only supported in the H8S/2357 ZTAT.

Port 3 Register (PORT3)

Bit :	7	6	5	4	3	2	1	0
	—	—	P35	P34	P33	P32	P31	P30
Initial value :	Undefined	Undefined	—*	—*	—*	—*	—*	—*
R/W :	—	—	R	R	R	R	R	R

Note: * Determined by state of pins $P3_5$ to $P3_0$.

PORT3 is an 8-bit read-only register that shows the pin states. Writing of output data for the port 3 pins ($P3_5$ to $P3_0$) must always be performed on P3DR.

Bits 7 and 6 are reserved; they return an undetermined value if read, and cannot be modified.

If a port 3 read is performed while P3DDR bits are set to 1, the P3DR values are read. If a port 3 read is performed while P3DDR bits are cleared to 0, the pin states are read.

After a power-on reset and in hardware standby mode, PORT3 contents are determined by the pin states, as P3DDR and P3DR are initialized. PORT3 retains its prior state after a manual reset*, and in software standby mode.

Note: * Manual reset is only supported in the H8S/2357 ZTAT.

Port 3 Open Drain Control Register (P3ODR)

Bit :	7	6	5	4	3	2	1	0
	—	—	P35ODR	P34ODR	P33ODR	P32ODR	P31ODR	P30ODR
Initial value :	Undefined	Undefined	0	0	0	0	0	0
R/W :	—	—	R/W	R/W	R/W	R/W	R/W	R/W

P3ODR is an 8-bit readable/writable register that controls the PMOS on/off status for each port 3 pin ($P3_5$ to $P3_0$).

Bits 7 and 6 are reserved; they return an undetermined value if read, and cannot be modified.

Setting a P3ODR bit to 1 makes the corresponding port 3 pin an NMOS open-drain output pin, while clearing the bit to 0 makes the pin a CMOS output pin.

P3ODR is initialized to H'00 (bits 5 to 0) by a power-on reset, and in hardware standby mode. It retains its prior state after a manual reset*, and in software standby mode.

Note: * Manual reset is only supported in the H8S/2357 ZTAT.

9.4.3 Pin Functions

Port 3 pins also function as SCI I/O pins (TxD0, RxD0, SCK0, TxD1, RxD1, and SCK1). Port 3 pin functions are shown in table 9-7.

Table 9-7 Port 3 Pin Functions

Pin	Selection Method and Pin Functions

$P3_5$/SCK1

The pin function is switched as shown below according to the combination of bit C/$\overline{A}$ in the SCI1 SMR, bits CKE0 and CKE1 in SCR, and bit P35DDR.

CKE1	0				1
C/$\overline{A}$	0			1	—
CKE0	0		1	—	—
P35DDR	0	1	—	—	—
Pin function	$P3_5$ input pin	$P3_5$ output pin*	SCK1 output pin*	SCK1 output pin*	SCK1 input pin

Note: * When P35ODR = 1, the pin becomes an NMOS open-drain output.

$P3_4$/SCK0

The pin function is switched as shown below according to the combination of bit C/$\overline{A}$ in the SCI0 SMR, bits CKE0 and CKE1 in SCR, and bit P34DDR.

CKE1	0				1
C/$\overline{A}$	0			1	—
CKE0	0		1	—	—
P34DDR	0	1	—	—	—
Pin function	$P3_4$ input pin	$P3_4$ output pin*	SCK0 output pin*	SCK0 output pin*	SCK0 input pin

Note: * When P34ODR = 1, the pin becomes an NMOS open-drain output.

Pin	Selection Method and Pin Functions

$P3_3$/RxD1

The pin function is switched as shown below according to the combination of bit RE in the SCI1 SCR, and bit P33DDR.

RE	0		1
P33DDR	0	1	—
Pin function	$P3_3$ input pin	$P3_3$ output pin*	RxD1 input pin

Note: * When P33ODR = 1, the pin becomes an NMOS open-drain output.

$P3_2$/RxD0

The pin function is switched as shown below according to the combination of bit RE in the SCI0 SCR, and bit P32DDR.

RE	0		1
P32DDR	0	1	—
Pin function	$P3_2$ input pin	$P3_2$ output pin*	RxD0 input pin

Note: * When P32ODR = 1, the pin becomes an NMOS open-drain output.

$P3_1$/TxD1

The pin function is switched as shown below according to the combination of bit TE in the SCI1 SCR, and bit P31DDR.

TE	0		1
P31DDR	0	1	—
Pin function	$P3_1$ input pin	$P3_1$ output pin*	TxD1 output pin*

Note: * When P31ODR = 1, the pin becomes an NMOS open-drain output.

$P3_0$/TxD0

The pin function is switched as shown below according to the combination of bit TE in the SCI0 SCR, and bit P30DDR.

TE	0		1
P30DDR	0	1	—
Pin function	$P3_0$ input pin	$P3_0$ output pin*	TxD0 output pin*

Note: * When P30ODR = 1, the pin becomes an NMOS open-drain output.

9.5 Port 4

9.5.1 Overview

Port 4 is an 8-bit input-only port. Port 4 pins also function as A/D converter analog input pins (AN0 to AN7) and D/A converter analog output pins (DA0 and DA1). Port 4 pin functions are the same in all operating modes. Figure 9-4 shows the port 4 pin configuration.

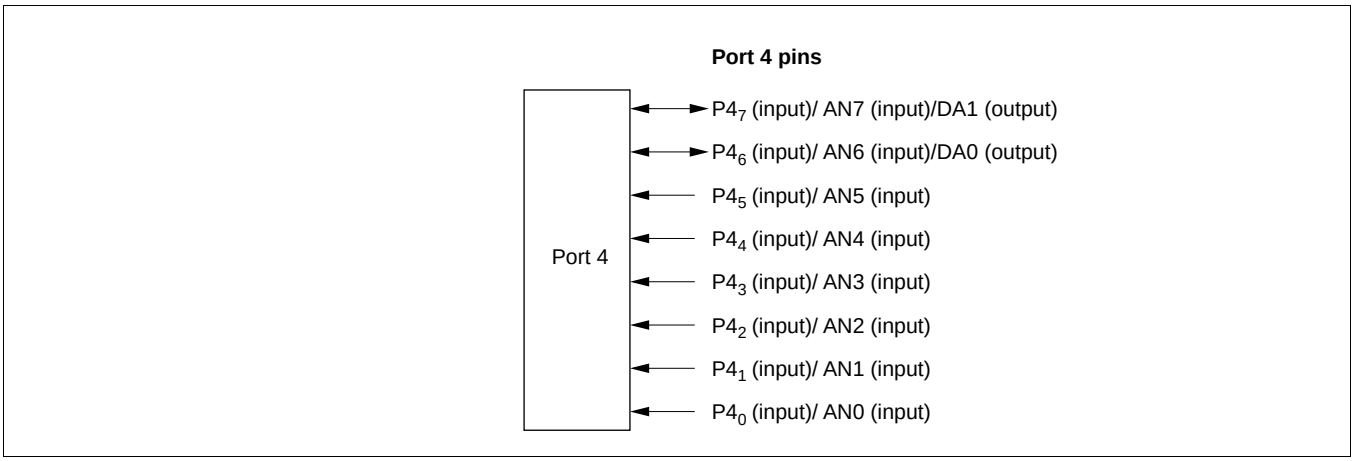

Figure 9-4 Port 4 Pin Functions

9.5.2 Register Configuration

Table 9-8 shows the port 4 register configuration. Port 4 is an input-only port, and does not have a data direction register or data register.

Table 9-8 Port 4 Registers

Name	Abbreviation	R/W	Initial Value	Address*
Port 4 register	PORT4	R	Undefined	H'FF53

Note: * Lower 16 bits of the address.

Port 4 Register (PORT4): The pin states are always read when a port 4 read is performed.

Bit	:	7	6	5	4	3	2	1	0
		P47	P46	P45	P44	P43	P42	P41	P40
Initial value	:	—*	—*	—*	—*	—*	—*	—*	—*
R/W	:	R	R	R	R	R	R	R	R

Note: * Determined by state of pins P4$_7$ to P4$_0$.

9.5.3 Pin Functions

Port 4 pins also function as A/D converter analog input pins (AN0 to AN7) and D/A converter analog output pins (DA0 and DA1).

9.6 Port 5

9.6.1 Overview

Port 5 is a 4-bit I/O port. Port 5 pins also function as SCI I/O pins (TxD2, RxD2, and SCK2) and the A/D converter input pin ($\overline{\text{ADTRG}}$). Port 5 pin functions are the same in all operating modes. Figure 9-5 shows the port 5 pin configuration.

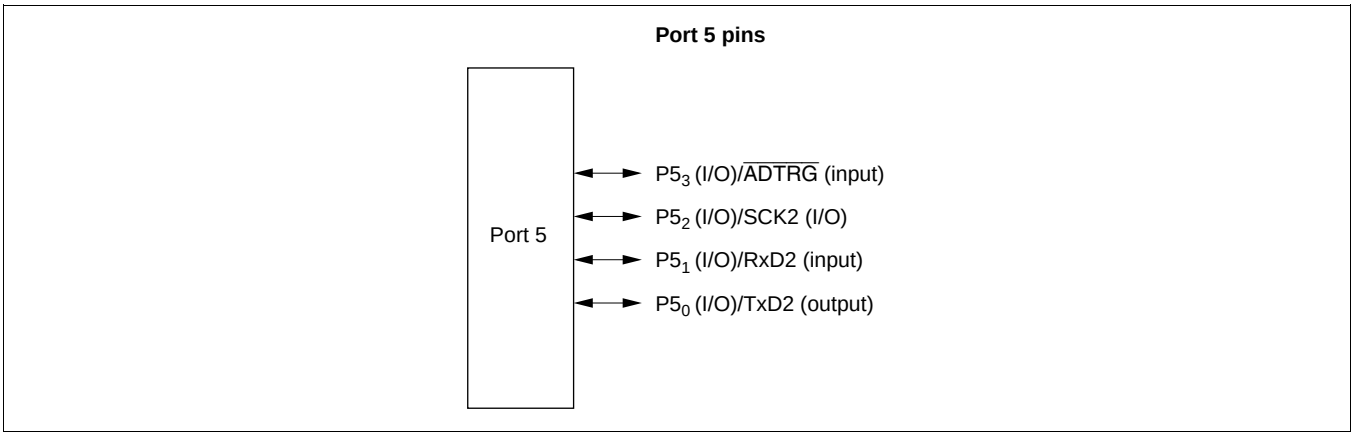

Figure 9-5 Port 5 Pin Functions

9.6.2 Register Configuration

Table 9-9 shows the port 5 register configuration.

Table 9-9 Port 5 Registers

Name	Abbreviation	R/W	Initial Value*[2]	Address*[1]
Port 5 data direction register	P5DDR	W	H'0	H'FEB4
Port 5 data register	P5DR	R/W	H'0	H'FF64
Port 5 register	PORT5	R	Undefined	H'FF54

Notes: 1. Lower 16 bits of the address.
2. Value of bits 3 to 0.

Port 5 Data Direction Register (P5DDR)

Bit	:	7	6	5	4	3	2	1	0
		—	—	—	—	P53DDR	P52DDR	P51DDR	P50DDR
Initial value	:	Undefined	Undefined	Undefined	Undefined	0	0	0	0
R/W	:	—	—	—	—	W	W	W	W

P5DDR is an 8-bit write-only register, the individual bits of which specify input or output for the pins of port 5. Bits 7 to 4 are reserved. P5DDR cannot be read; if it is, an undefined value will be read.

Setting a P5DDR bit to 1 makes the corresponding port 5 pin an output pin, while clearing the bit to 0 makes the pin an input pin.

P5DDR is initialized to H'0 (bits 3 to 0) by a power-on reset, and in hardware standby mode. It retains its prior state after a manual reset*, and in software standby mode. As the SCI is initialized, the pin states are determined by the P5DDR and P5DR specifications.

Note: * Manual reset is only supported in the H8S/2357 ZTAT.

Port 5 Data Register (P5DR)

Bit	:	7	6	5	4	3	2	1	0
		—	—	—	—	P53DR	P52DR	P51DR	P50DR
Initial value	:	Undefined	Undefined	Undefined	Undefined	0	0	0	0
R/W	:	—	—	—	—	R/W	R/W	R/W	R/W

P5DR is an 8-bit readable/writable register that stores output data for the port 5 pins ($P5_3$ to $P5_0$).

Bits 7 to 4 are reserved; they return an undetermined value if read, and cannot be modified.

P5DR is initialized to H'0 (bits 3 to 0) by a power-on reset, and in hardware standby mode. It retains its prior state after a manual reset*, and in software standby mode.

Note: * Manual reset is only supported in the H8S/2357 ZTAT.

Port 5 Register (PORT5)

Bit	:	7	6	5	4	3	2	1	0
		—	—	—	—	P53	P52	P51	P50
Initial value	:	Undefined	Undefined	Undefined	Undefined	—*	—*	—*	—*
R/W	:	—	—	—	—	R	R	R	R

Note: * Determined by state of pins $P5_3$ to $P5_0$.

PORT5 is an 8-bit read-only register that shows the pin states. It cannot be written to. Writing of output data for the port 5 pins ($P5_3$ to $P5_0$) must always be performed on P5DR.

Bits 7 to 4 are reserved; they return an undetermined value if read, and cannot be modified.

If a port 5 read is performed while P5DDR bits are set to 1, the P5DR values are read. If a port 5 read is performed while P5DDR bits are cleared to 0, the pin states are read.

After a power-on reset and in hardware standby mode, PORT5 contents are determined by the pin states, as P5DDR and P5DR are initialized. PORT5 retains its prior state after a manual reset*, and in software standby mode.

Note: * Manual reset is only supported in the H8S/2357 ZTAT.

9.6.3 Pin Functions

Port 5 pins also function as SCI I/O pins (TxD2, RxD2, and SCK2), and the A/D converter input pin ($\overline{\text{ADTRG}}$). Port 5 pin functions are shown in table 9-10.

Table 9-10 Port 5 Pin Functions

Pin	Selection Method and Pin Functions

$P5_3/\overline{\text{ADTRG}}$

The pin function is switched as shown below according to the combination of bits TRGS1 and TRGS0 in the A/D converter ADCR, and bit P53DDR.

P53DDR	0	1
Pin function	$P5_3$ input pin	$P5_3$ output pin
	$\overline{\text{ADTRG}}$ input pin*	

Note: * $\overline{\text{ADTRG}}$ input when TRGS0 = TRGS1 = 1.

$P5_2$/SCK2

The pin function is switched as shown below according to the combination of bit C/$\overline{\text{A}}$ in the SCI2 SMR, bits CKE0 and CKE1 in SCR, and bit P52DDR.

CKE1	0				1
C/$\overline{\text{A}}$	0			1	—
CKE0	0		1	—	—
P52DDR	0	1	—	—	—
Pin function	$P5_2$ input pin	$P5_2$ output pin	SCK2 output pin	SCK2 output pin	SCK2 input pin

$P5_1$/RxD2

The pin function is switched as shown below according to the combination of bit RE in the SCI2 SCR, and bit P51DDR.

RE	0		1
P51DDR	0	1	—
Pin function	$P5_1$ input pin	$P5_1$ output pin	RxD2 input pin

$P5_0$/TxD2

The pin function is switched as shown below according to the combination of bit TE in the SCI2 SCR, and bit P50DDR.

TE	0		1
P50DDR	0	1	—
Pin function	$P5_0$ input pin	$P5_0$ output pin	TxD2 output pin

9.7 Port 6

9.7.1 Overview

Port 6 is an 8-bit I/O port. Port 6 pins also function as interrupt input pins ($\overline{IRQ0}$ to $\overline{IRQ3}$), DMAC I/O pins ($\overline{DREQ0}$, $\overline{TEND0}$, $\overline{DREQ1}$, and $\overline{TEND1}$), and bus control output pins ($\overline{CS4}$ to $\overline{CS7}$). The functions of pins $P6_5$ to $P6_2$ are the same in all operating modes, while the functions of pins $P6_7$, $P6_6$, $P6_1$, and $P6_0$ change according to the operating mode. Pins $P6_7$ to $P6_4$ are schmitt-triggered inputs. Figure 9-6 shows the port 6 pin configuration.

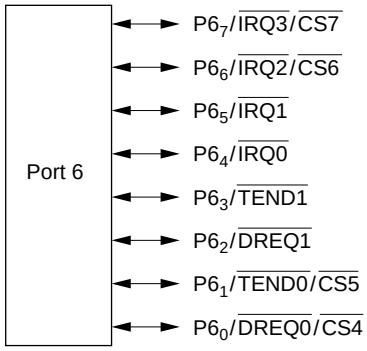

Port 6 pins

$P6_7/\overline{IRQ3}/\overline{CS7}$
$P6_6/\overline{IRQ2}/\overline{CS6}$
$P6_5/\overline{IRQ1}$
$P6_4/\overline{IRQ0}$
$P6_3/\overline{TEND1}$
$P6_2/\overline{DREQ1}$
$P6_1/\overline{TEND0}/\overline{CS5}$
$P6_0/\overline{DREQ0}/\overline{CS4}$

Pin functions in mode 7*

$P6_7$ (I/O)/$\overline{IRQ3}$ (input)
$P6_6$ (I/O)/$\overline{IRQ2}$ (input)
$P6_5$ (I/O)/$\overline{IRQ1}$ (input)
$P6_4$ (I/O)/$\overline{IRQ0}$ (input)
$P6_3$ (I/O)/$\overline{TEND1}$ (output)
$P6_2$ (I/O)/$\overline{DREQ1}$ (input)
$P6_1$ (I/O)/$\overline{TEND0}$ (output)
$P6_0$ (I/O)/$\overline{DREQ0}$ (input)

Pin functions in modes 4 to 6*

$P6_7$ (input)/$\overline{IRQ3}$ (input)/$\overline{CS7}$ (output)
$P6_6$ (input)/$\overline{IRQ2}$ (input)/$\overline{CS6}$ (output)
$P6_5$ (I/O)/$\overline{IRQ1}$ (input)
$P6_4$ (I/O)/$\overline{IRQ0}$ (input)
$P6_3$ (I/O)/$\overline{TEND1}$ (output)
$P6_2$ (I/O)/$\overline{DREQ1}$ (input)
$P6_1$ (input)/$\overline{TEND0}$ (output)/$\overline{CS5}$ (output)
$P6_0$ (input)/$\overline{DREQ0}$ (input)/$\overline{CS4}$ (output)

Note: * Modes 6 and 7 are provided in the on-chip ROM version only.

Figure 9-6 Port 6 Pin Functions

9.7.2 Register Configuration

Table 9-11 shows the port 6 register configuration.

Table 9-11 Port 6 Registers

Name	Abbreviation	R/W	Initial Value	Address*
Port 6 data direction register	P6DDR	W	H'00	H'FEB5
Port 6 data register	P6DR	R/W	H'00	H'FF65
Port 6 register	PORT6	R	Undefined	H'FF55

Note: * Lower 16 bits of the address.

Port 6 Data Direction Register (P6DDR)

Bit :	7	6	5	4	3	2	1	0
	P67DDR	P66DDR	P65DDR	P64DDR	P63DDR	P62DDR	P61DDR	P60DDR
Initial value :	0	0	0	0	0	0	0	0
R/W :	W	W	W	W	W	W	W	W

P6DDR is an 8-bit write-only register, the individual bits of which specify input or output for the pins of port 6. P6DDR cannot be read; if it is, an undefined value will be read.

Setting a P6DDR bit to 1 makes the corresponding port 6 pin an output pin, while clearing the bit to 0 makes the pin an input pin.

P6DDR is initialized to H'00 by a power-on reset, and in hardware standby mode. It retains its prior state after a manual reset*, and in software standby mode. As the DMAC is initialized by a manual reset*, the pin states are determined by the P6DDR and P6DR specifications.

Note: * Manual reset is only supported in the H8S/2357 ZTAT.

Port 6 Data Register (P6DR)

Bit :	7	6	5	4	3	2	1	0
	P67DR	P66DR	P65DR	P64DR	P63DR	P62DR	P61DR	P60DR
Initial value :	0	0	0	0	0	0	0	0
R/W :	R/W	R/W	R/W	R/W	R/W	R/W	R/W	R/W

P6DR is an 8-bit readable/writable register that stores output data for the port 6 pins ($P6_7$ to $P6_0$).

P6DR is initialized to H'00 by a power-on reset, and in hardware standby mode. It retains its prior state after a manual reset*, and in software standby mode.

Note: * Manual reset is only supported in the H8S/2357 ZTAT.

Port 6 Register (PORT6)

Bit :	7	6	5	4	3	2	1	0
	P67	P66	P65	P64	P63	P62	P61	P60
Initial value :	—*	—*	—*	—*	—*	—*	—*	—*
R/W :	R	R	R	R	R	R	R	R

Note: * Determined by state of pins $P6_7$ to $P6_0$.

PORT6 is an 8-bit read-only register that shows the pin states. It cannot be written to. Writing of output data for the port 6 pins ($P6_7$ to $P6_0$) must always be performed on P6DR.

If a port 6 read is performed while P6DDR bits are set to 1, the P6DR values are read. If a port 6 read is performed while P6DDR bits are cleared to 0, the pin states are read.

After a power-on reset and in hardware standby mode, PORT6 contents are determined by the pin states, as P6DDR and P6DR are initialized. PORT6 retains its prior state after a manual reset*, and in software standby mode.

Note: * Manual reset is only supported in the H8S/2357 ZTAT.

9.7.3 Pin Functions

Port 6 pins also function as interrupt input pins ($\overline{IRQ0}$ to $\overline{IRQ3}$), DMAC I/O pins ($\overline{DREQ0}$, $\overline{TEND0}$, $\overline{DREQ1}$, and $\overline{TEND1}$), and bus control output pins ($\overline{CS4}$ to $\overline{CS7}$). Port 6 pin functions are shown in table 9-12.

Table 9-12 Port 6 Pin Functions

Pin	Selection Method and Pin Functions
$P6_7/\overline{IRQ3}/\overline{CS7}$	The pin function is switched as shown below according to bit P67DDR.

Mode	Mode 7*		Modes 4 to 6*	
P67DDR	0	1	0	1
Pin function	$P6_7$ input pin	$P6_7$ output pin	$P6_7$ input pin	$\overline{CS7}$ output pin
	$\overline{IRQ3}$ interrupt input pin			

Note: * Modes 6 and 7 are provided in the on-chip ROM version only.

$P6_6/\overline{IRQ2}/\overline{CS6}$ The pin function is switched as shown below according to bit P66DDR.

Mode	Mode 7*		Modes 4 to 6*	
P66DDR	0	1	0	1
Pin function	$P6_6$ input pin	$P6_6$ output pin	$P6_6$ input pin	$\overline{CS6}$ output pin
	$\overline{IRQ2}$ interrupt input pin			

Note: * Modes 6 and 7 are provided in the on-chip ROM version only.

$P6_5/\overline{IRQ1}$ The pin function is switched as shown below according to bit P65DDR.

P65DDR	0	1
Pin function	$P6_5$ input pin	$P6_5$ output pin
	$\overline{IRQ1}$ interrupt input pin	

$P6_4/\overline{IRQ0}$ The pin function is switched as shown below according to bit P64DDR.

P64DDR	0	1
Pin function	$P6_4$ input pin	$P6_4$ output pin
	$\overline{IRQ0}$ interrupt input pin	

Pin	Selection Method and Pin Functions

$P6_3/\overline{TEND1}$

The pin function is switched as shown below according to the combination of bit TEE1 in the DMAC DMATCR, and bit P63DDR.

TEE1	0		1
P63DDR	0	1	—
Pin function	$P6_3$ input pin	$P6_3$ output pin	$\overline{TEND1}$ output

$P6_2/\overline{DREQ1}$

The pin function is switched as shown below according to bit P62DDR.

P62DDR	0	1
Pin function	$P6_2$ input pin	$P6_2$ output pin
	$\overline{DERQ1}$ input	

$P6_1/\overline{TEND0}/\overline{CS5}$

The pin function is switched as shown below according to the combination of bit TEE0 in the DMAC DMATCR, and bit P61DDR.

Mode	Mode 7*			Modes 4 to 6*		
TEE0	0		1	0		1
P61DDR	0	1	—	0	1	—
Pin function	$P6_1$ input pin	$P6_1$ output pin	$\overline{TEND0}$ output	$P6_1$ input pin	$\overline{CS5}$ output pin	$\overline{TEND0}$ output

Note: * Modes 6 and 7 are provided in the on-chip ROM version only.

$P6_0/\overline{DREQ0}/\overline{CS4}$

The pin function is switched as shown below according to bit P60DDR.

Mode	Mode 7*		Modes 4 to 6*	
P60DDR	0	1	0	1
Pin function	$P6_0$ input pin	$P6_0$ output pin	$P6_0$ input pin	$\overline{CS4}$ output pin
	$\overline{DREQ0}$ input			

Note: * Modes 6 and 7 are provided in the on-chip ROM version only.

9.8 Port A

9.8.1 Overview

Port A is an 8-bit I/O port. Port A pins also function as address bus outputs and interrupt input pins ($\overline{IRQ4}$ to $\overline{IRQ7}$). The pin functions change according to the operating mode.

Port A has a on-chip MOS input pull-up function that can be controlled by software. Pins PA_7 to PA_4 are schmitt-triggered inputs.

Figure 9-7 shows the port A pin configuration.

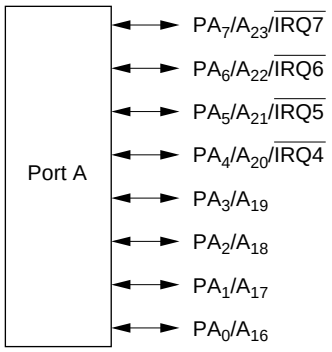

Pin functions in mode 7*

PA_7 (I/O)/$\overline{IRQ7}$ (input)
PA_6 (I/O)/$\overline{IRQ6}$ (input)
PA_5 (I/O)/$\overline{IRQ5}$ (input)
PA_4 (I/O)/$\overline{IRQ4}$ (input)
PA_3 (I/O)
PA_2 (I/O)
PA_1 (I/O)
PA_0 (I/O)

Pin functions in mode 6*

PA_7 (input)/A_{23} (output)/$\overline{IRQ7}$ (input)
PA_6 (input)/A_{22} (output)/$\overline{IRQ6}$ (input)
PA_5 (input)/A_{21} (output)/$\overline{IRQ5}$ (input)
PA_4 (input)/A_{20} (output)/$\overline{IRQ4}$ (input)
PA_3 (input)/A_{19} (output)
PA_2 (input)/A_{18} (output)
PA_1 (input)/A_{17} (output)
PA_0 (input)/A_{16} (output)

Pin functions in modes 4 and 5

PA_7 (input)/A_{23}(output)/$\overline{IRQ7}$ (input)
PA_6 (input)/A_{22}(output)/$\overline{IRQ6}$ (input)
PA_5 (input)/A_{21} (output)/$\overline{IRQ5}$ (input)
A_{20} (output)
A_{19} (output)
A_{18} (output)
A_{17} (output)
A_{16} (output)

Note: * Modes 6 and 7 are provided in the on-chip ROM version only.

Figure 9-7 Port A Pin Functions

9.8.2 Register Configuration

Table 9-13 shows the port A register configuration.

Table 9-13 Port A Registers

Name	Abbreviation	R/W	Initial Value	Address*[1]
Port A data direction register	PADDR	W	H'00	H'FEB9
Port A data register	PADR	R/W	H'00	H'FF69
Port A register	PORTA	R	Undefined	H'FF59
Port A MOS pull-up control register*[2]	PAPCR	R/W	H'00	H'FF70
Port A open-drain control register*[2]	PAODR	R/W	H'00	H'FF77

Notes: 1. Lower 16 bits of the address.
2. PAPCR and PAODR settings are prohibited in the ROMless version.

Port A Data Direction Register (PADDR)

Bit :	7	6	5	4	3	2	1	0
	PA7DDR	PA6DDR	PA5DDR	PA4DDR	PA3DDR	PA2DDR	PA1DDR	PA0DDR
Initial value :	0	0	0	0	0	0	0	0
R/W :	W	W	W	W	W	W	W	W

PADDR is an 8-bit write-only register, the individual bits of which specify input or output for the pins of port A. PADDR cannot be read; if it is, an undefined value will be read.

PADDR is initialized to H'00 by a power-on reset and in hardware standby mode. It retains its prior state after a manual reset*, and in software standby mode. The OPE bit in SBYCR is used to select whether the address output pins retain their output state or become high-impedance when a transition is made to software standby mode.

Note: * Manual reset is only supported in the H8S/2357 ZTAT.

- Mode 7
  Setting a PADDR bit to 1 makes the corresponding port A pin an output port, while clearing the bit to 0 makes the pin an input port.

- Mode 6
  Setting a PADDR bit to 1 makes the corresponding port A pin an address output while clearing the bit to 0 makes the pin an input port.

- Modes 4 and 5
  The corresponding port A pins are address outputs irrespective of the value of bits PA4DDR to PA0DDR.
  Setting one of bits PA7DDR to PA5DDR to 1 makes the corresponding port A pin an address output, while clearing the bit to 0 makes the pin an input port.

Port A Data Register (PADR)

Bit :	7	6	5	4	3	2	1	0
	PA7DR	PA6DR	PA5DR	PA4DR	PA3DR	PA2DR	PA1DR	PA0DR
Initial value :	0	0	0	0	0	0	0	0
R/W :	R/W	R/W	R/W	R/W	R/W	R/W	R/W	R/W

PADR is an 8-bit readable/writable register that stores output data for the port A pins (PA_7 to PA_0).

PADR is initialized to H'00 by a power-on reset, and in hardware standby mode. It retains its prior state after a manual reset*, and in software standby mode.

Note: * Manual reset is only supported in the H8S/2357 ZTAT.

Port A Register (PORTA)

Bit :	7	6	5	4	3	2	1	0
	PA7	PA6	PA5	PA4	PA3	PA2	PA1	PA0
Initial value :	—*	—*	—*	—*	—*	—*	—*	—*
R/W :	R	R	R	R	R	R	R	R

Note: * Determined by state of pins PA_7 to PA_0.

PORTA is an 8-bit read-only register that shows the pin states. It cannot be written to. Writing of output data for the port A pins (PA_7 to PA_0) must always be performed on PADR.

If a port A read is performed while PADDR bits are set to 1, the PADR values are read. If a port A read is performed while PADDR bits are cleared to 0, the pin states are read.

After a power-on reset and in hardware standby mode, PORTA contents are determined by the pin states, as PADDR and PADR are initialized. PORTA retains its prior state after a manual reset*, and in software standby mode.

Note: * Manual reset is only supported in the H8S/2357 ZTAT.

Port A MOS Pull-Up Control Register (PAPCR) (On-Chip ROM Version Only)

Bit :	7	6	5	4	3	2	1	0
	PA7PCR	PA6PCR	PA5PCR	PA4PCR	PA3PCR	PA2PCR	PA1PCR	PA0PCR
Initial value :	0	0	0	0	0	0	0	0
R/W :	R/W	R/W	R/W	R/W	R/W	R/W	R/W	R/W

Note: Setting is prohibited in the H8S/2352, H8S/2394, H8S/2392, and H8S/2390.

PAPCR is an 8-bit readable/writable register that controls the MOS input pull-up function incorporated into port A on an individual bit basis.

All the bits are valid in modes 6 and 7, and bits 7 to 5 are valid in modes 4 and 5. When a PADDR bit is cleared to 0 (input port setting), setting the corresponding PAPCR bit to 1 turns on the MOS input pull-up for the corresponding pin.

PAPCR is initialized to H'00 by a power-on reset, and in hardware standby mode. It retains its prior state after a manual reset*, and in software standby mode.

Note: * Manual reset is only supported in the H8S/2357 ZTAT.

Port A Open Drain Control Register (PAODR) (On-Chip ROM Version Only)

Bit	:	7	6	5	4	3	2	1	0
		PA7ODR	PA6ODR	PA5ODR	PA4ODR	PA3ODR	PA2ODR	PA1ODR	PA0ODR
Initial value	:	0	0	0	0	0	0	0	0
R/W	:	R/W	R/W	R/W	R/W	R/W	R/W	R/W	R/W

Note: Setting is prohibited in the H8S/2352, H8S/2394, H8S/2392, and H8S/2390.

PAODR is an 8-bit readable/writable register that controls whether PMOS is on or off for each port A pin (PA_7 to PA_0).

All bits are valid in mode 7.

Setting a PAODR bit to 1 makes the corresponding port A pin an NMOS open-drain output, while clearing the bit to 0 makes the pin a CMOS output.

PAODR is initialized to H'00 by a power-on reset, and in hardware standby mode. It retains its prior state after a manual reset*, and in software standby mode.

Note: * Manual reset is only supported in the H8S/2357 ZTAT.

9.8.3 Pin Functions

Mode 7 (On-Chip ROM Version Only): In mode 7, port A pins function as I/O ports and interrupt input pins. Input or output can be specified for each pin on an individual bit basis. Setting a PADDR bit to 1 makes the corresponding port A pin an output port, while clearing the bit to 0 makes the pin an input port.

Port A pin functions in mode 7 are shown in figure 9-8.

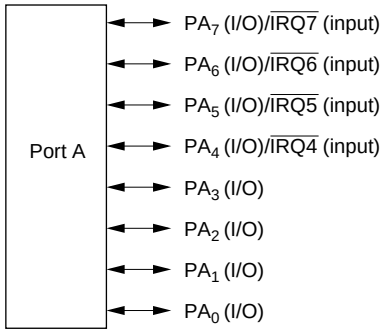

Figure 9-8 Port A Pin Functions (Mode 7)

Mode 6 (On-Chip ROM Version Only): In mode 6, port A pins function as address outputs or input ports and interrupt input pins. Input or output can be specified on an individual bit basis. Setting a PADDR bit to 1 makes the corresponding port A pin an address output, while clearing the bit to 0 makes the pin an input port.

Port A pin functions in mode 6 are shown in figure 9-9.

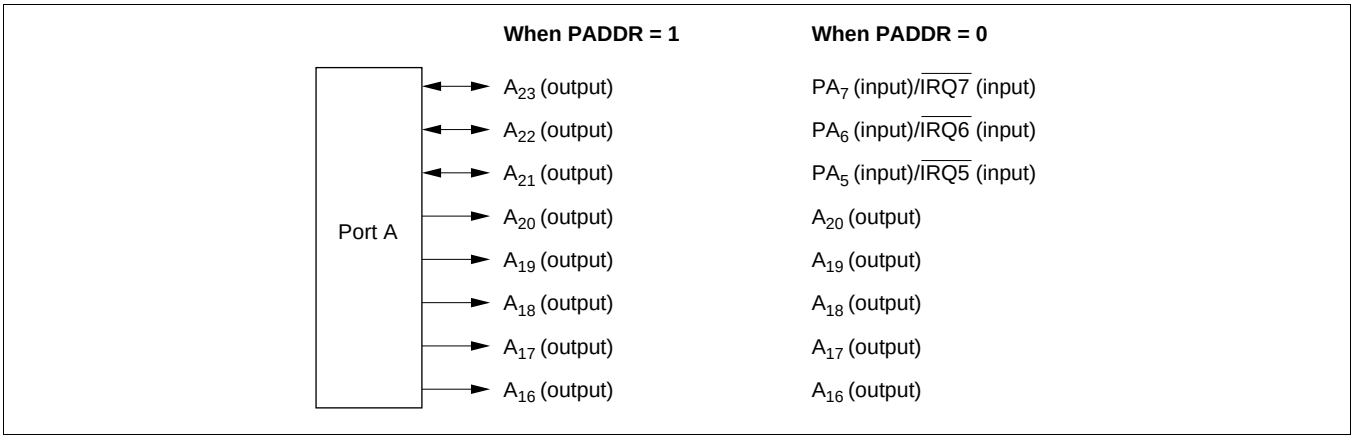

Figure 9-9 Port A Pin Functions (Mode 6)

Modes 4 and 5: In modes 4 and 5, the lower 5 bits of port A are designated as address outputs automatically, while the upper 3 bits function as address outputs or input ports and interrupt input pins. Input or output can be specified individually for the upper 3 bits. Setting one of bits PA7DDR to PA5DDR to 1 makes the corresponding port A pin an address output, while clearing the bit to 0 makes the pin an input port.

Port A pin functions in modes 4 and 5 are shown in figure 9-10.

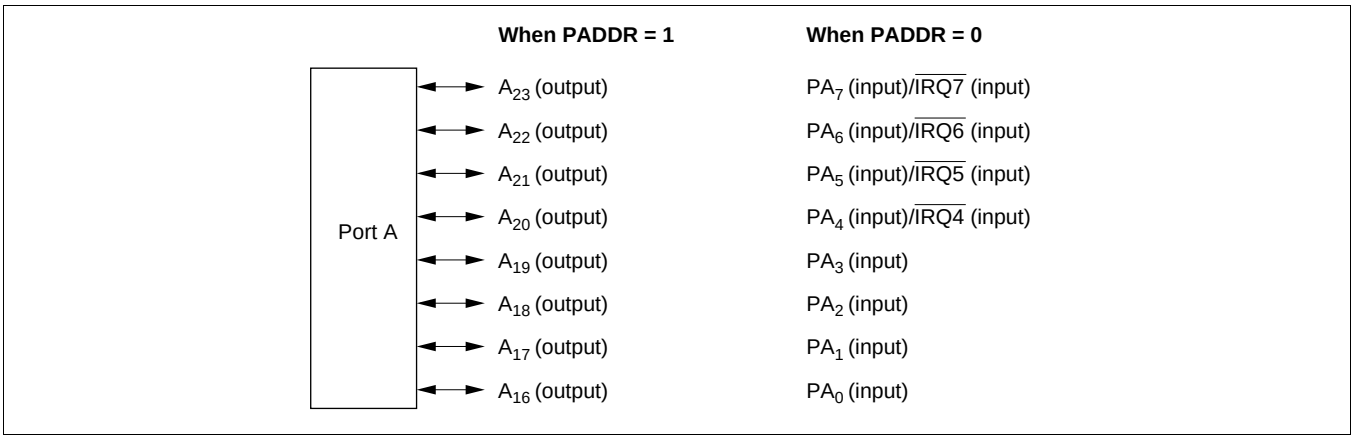

Figure 9-10 Port A Pin Functions (Modes 4 and 5)

9.8.4 MOS Input Pull-Up Function (On-Chip ROM Version Only)

Port A has a on-chip MOS input pull-up function that can be controlled by software. This MOS input pull-up function can be used by pins PA_7 to PA_5 in modes 4 and 5, and by all pins in modes 6 and 7. MOS input pull-up can be specified as on or off on an individual bit basis.

When a PADDR bit is cleared to 0, setting the corresponding PAPCR bit to 1 turns on the MOS input pull-up for that pin.

The MOS input pull-up function is in the off state after a power-on reset, and in hardware standby mode. The prior state is retained after a manual reset*, and in software standby mode.

Table 9-14 summarizes the MOS input pull-up states.

Note: * Manual reset is only supported in the H8S/2357 ZTAT.

Table 9-14 MOS Input Pull-Up States (Port A)

Modes		Power-On Reset	Hardware Standby Mode	Manual Reset*	Software Standby Mode	In Other Operations
6, 7	PA_7 to PA_0	OFF		ON/OFF		
4, 5	PA_7 to PA_5			ON/OFF		
	PA_4 to PA_0			OFF		

Legend:
OFF: MOS input pull-up is always off.
ON/OFF: On when PADDR = 0 and PAPCR = 1; otherwise off.

Note: * Manual reset is only supported in the H8S/2357 ZTAT.

9.9 Port B

9.9.1 Overview

Port B is an 8-bit I/O port. Port B has an address bus output function, and the pin functions change according to the operating mode.

Port B has a on-chip MOS input pull-up function that can be controlled by software (on-chip ROM version only).

Figure 9-11 shows the port B pin configuration.

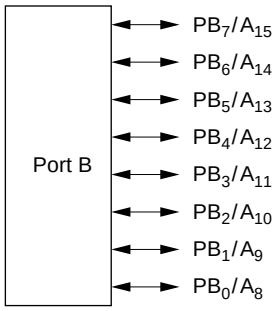

Port B pins	Pin functions in mode 7*
PB_7/A_{15}	PB_7 (I/O)
PB_6/A_{14}	PB_6 (I/O)
PB_5/A_{13}	PB_5 (I/O)
PB_4/A_{12}	PB_4 (I/O)
PB_3/A_{11}	PB_3 (I/O)
PB_2/A_{10}	PB_2 (I/O)
PB_1/A_9	PB_1 (I/O)
PB_0/A_8	PB_0 (I/O)

Pin functions in mode 6*	Pin functions in modes 4 and 5
PB_7 (input)/A_{15} (output)	A_{15} (output)
PB_6 (input)/A_{14} (output)	A_{14} (output)
PB_5 (input)/A_{13} (output)	A_{13} (output)
PB_4 (input)/A_{12} (output)	A_{12} (output)
PB_3 (input)/A_{11} (output)	A_{11} (output)
PB_2 (input)/A_{10} (output)	A_{10} (output)
PB_1 (input)/A_9 (output)	A_9 (output)
PB_0 (input)/A_8 (output)	A_8 (output)

Note: * Modes 6 and 7 are provided in the on-chip ROM version only.

Figure 9-11 Port B Pin Functions

9.9.2 Register Configuration (On-Chip ROM Version Only)

Table 9-15 shows the port B register configuration.

Table 9-15 Port B Registers

Name	Abbreviation	R/W	Initial Value	Address *
Port B data direction register	PBDDR	W	H'00	H'FEBA
Port B data register	PBDR	R/W	H'00	H'FF6A
Port B register	PORTB	R	Undefined	H'FF5A
Port B MOS pull-up control register	PBPCR	R/W	H'00	H'FF71

Note: * Lower 16 bits of the address.

Port B Data Direction Register (PBDDR) (On-Chip ROM Version Only)

Bit	:	7	6	5	4	3	2	1	0
		PB7DDR	PB6DDR	PB5DDR	PB4DDR	PB3DDR	PB2DDR	PB1DDR	PB0DDR
Initial value	:	0	0	0	0	0	0	0	0
R/W	:	W	W	W	W	W	W	W	W

PBDDR is an 8-bit write-only register, the individual bits of which specify input or output for the pins of port B. PBDDR cannot be read; if it is, an undefined value will be read.

PBDDR is initialized to H'00 by a power-on reset and in hardware standby mode. It retains its prior state after a manual reset*, and in software standby mode. The OPE bit in SBYCR is used to select whether the address output pins retain their output state or become high-impedance when a transition is made to software standby mode.

Note: * Manual reset is only supported in the H8S/2357 ZTAT.

- Mode 7
  Setting a PBDDR bit to 1 makes the corresponding port B pin an output port, while clearing the bit to 0 makes the pin an input port.
- Mode 6
  Setting a PBDDR bit to 1 makes the corresponding port B pin an address output, while clearing the bit to 0 makes the pin an input port.
- Modes 4 and 5
  The corresponding port B pins are address outputs irrespective of the value of the PBDDR bits.

Port B Data Register (PBDR) (On-Chip ROM Version Only)

Bit	:	7	6	5	4	3	2	1	0
		PB7DR	PB6DR	PB5DR	PB4DR	PB3DR	PB2DR	PB1DR	PB0DR
Initial value	:	0	0	0	0	0	0	0	0
R/W	:	R/W	R/W	R/W	R/W	R/W	R/W	R/W	R/W

PBDR is an 8-bit readable/writable register that stores output data for the port B pins (PB_7 to PB_0). PBDR is initialized to H'00 by a power-on reset, and in hardware standby mode. It retains its prior state after a manual reset*, and in software standby mode.

Note: * Manual reset is only supported in the H8S/2357 ZTAT.

Port B Register (PORTB) (On-Chip ROM Version Only)

Bit :	7	6	5	4	3	2	1	0
	PB7	PB6	PB5	PB4	PB3	PB2	PB1	PB0
Initial value :	—*	—*	—*	—*	—*	—*	—*	—*
R/W :	R	R	R	R	R	R	R	R

Note: * Determined by state of pins PB_7 to PB_0.

PORTB is an 8-bit read-only register that shows the pin states. It cannot be written to. Writing of output data for the port B pins (PB_7 to PB_0) must always be performed on PBDR.

If a port B read is performed while PBDDR bits are set to 1, the PBDR values are read. If a port B read is performed while PBDDR bits are cleared to 0, the pin states are read.

After a power-on reset and in hardware standby mode, PORTB contents are determined by the pin states, as PBDDR and PBDR are initialized. PORTB retains its prior state after a manual reset*, and in software standby mode.

Note: * Manual reset is only supported in the H8S/2357 ZTAT.

Port B MOS Pull-Up Control Register (PBPCR) (On-Chip ROM Version Only)

Bit :	7	6	5	4	3	2	1	0
	PB7PCR	PB6PCR	PB5PCR	PB4PCR	PB3PCR	PB2PCR	PB1PCR	PB0PCR
Initial value :	0	0	0	0	0	0	0	0
R/W :	R/W	R/W	R/W	R/W	R/W	R/W	R/W	R/W

Note: Setting is prohibited in the H8S/2352, H8S/2394, H8S/2392, and H8S/2390.

PBPCR is an 8-bit readable/writable register that controls the MOS input pull-up function incorporated into port B on an individual bit basis.

When a PBDDR bit is cleared to 0 (input port setting) in mode 6 or 7, setting the corresponding PBPCR bit to 1 turns on the MOS input pull-up for the corresponding pin.

PBPCR is initialized to H'00 by a power-on reset, and in hardware standby mode. It retains its prior state after a manual reset*, and in software standby mode.

Note: * Manual reset is only supported in the H8S/2357 ZTAT.

9.9.3 Pin Functions

Mode 7 (On-Chip ROM Version Only): In mode 7, port B pins function as I/O ports. Input or output can be specified for each pin on an individual bit basis. Setting a PBDDR bit to 1 makes the corresponding port B pin an output port, while clearing the bit to 0 makes the pin an input port.

Port B pin functions in mode 7 are shown in figure 9-12.

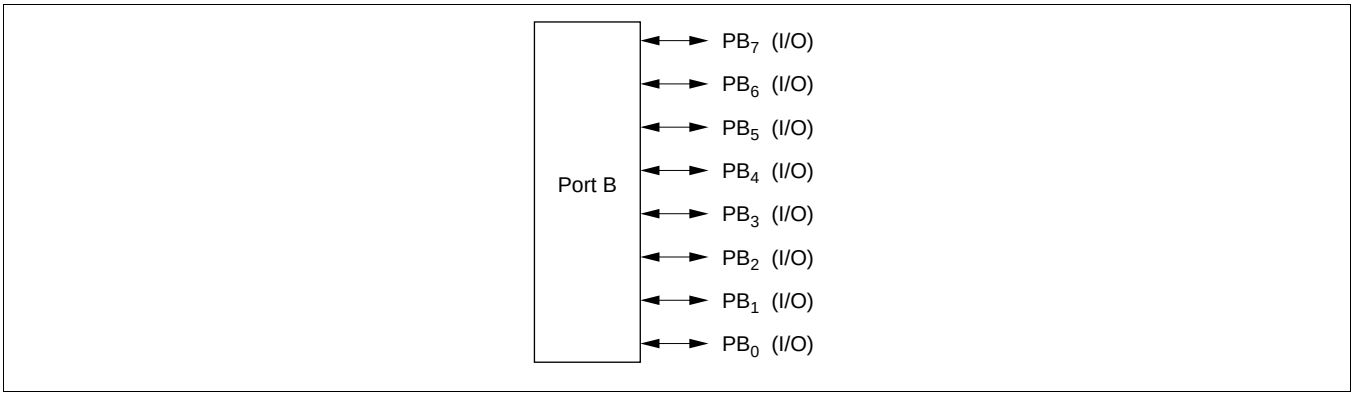

Figure 9-12 Port B Pin Functions (Mode 7)

Mode 6 (On-Chip ROM Version Only): In mode 6, port B pins function as address outputs or input ports. Input or output can be specified on an individual bit basis. Setting a PBDDR bit to 1 makes the corresponding port B pin an address output, while clearing the bit to 0 makes the pin an input port.

Port B pin functions in mode 6 are shown in figure 9-13.

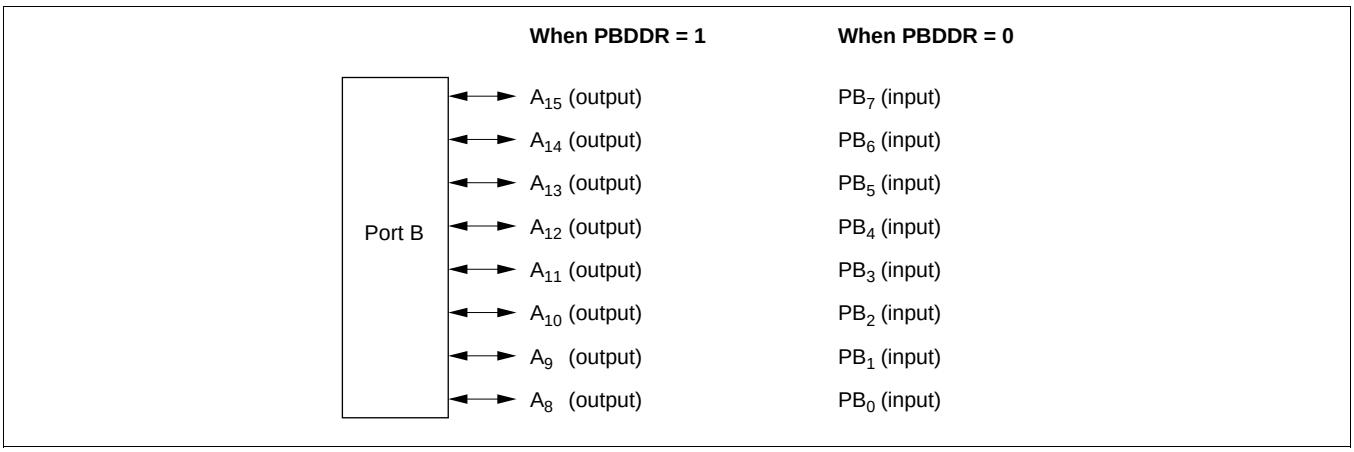

Figure 9-13 Port B Pin Functions (Mode 6)

Modes 4 and 5: In modes 4 and 5, port B pins are automatically designated as address outputs.

Port B pin functions in modes 4 and 5 are shown in figure 9-14.

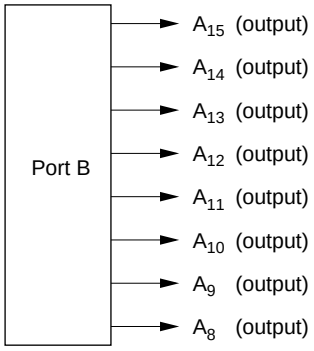

Figure 9-14 Port B Pin Functions (Modes 4 and 5)

9.9.4 MOS Input Pull-Up Function (On-Chip ROM Version Only)

Port B has a on-chip MOS input pull-up function that can be controlled by software. This MOS input pull-up function can be used in modes 6 and 7, and can be specified as on or off on an individual bit basis.

When a PBDDR bit is cleared to 0 in mode 6 or 7, setting the corresponding PBPCR bit to 1 turns on the MOS input pull-up for that pin.

The MOS input pull-up function is in the off state after a power-on reset, and in hardware standby mode. The prior state is retained after a manual reset*, and in software standby mode.

Table 9-16 summarizes the MOS input pull-up states.

Note: * Manual reset is only supported in the H8S/2357 ZTAT.

Table 9-16 MOS Input Pull-Up States (Port B)

Modes	Power-On Reset	Hardware Standby Mode	Manual Reset*	Software Standby Mode	In Other Operations
6, 7	OFF		ON/OFF		
4, 5			OFF		

Legend:
OFF: MOS input pull-up is always off.
ON/OFF: On when PBDDR = 0 and PBPCR = 1; otherwise off.
Note: * Manual reset is only supported in the H8S/2357 ZTAT.

9.10 Port C

9.10.1 Overview

Port C is an 8-bit I/O port. Port C has an address bus output function, and the pin functions change according to the operating mode.

Port C has a on-chip MOS input pull-up function that can be controlled by software (on-chip ROM version only).

Figure 9-15 shows the port C pin configuration.

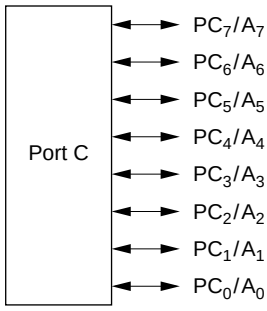

Port C pins	Pin functions in mode 7*
PC_7/A_7	PC_7 (I/O)
PC_6/A_6	PC_6 (I/O)
PC_5/A_5	PC_5 (I/O)
PC_4/A_4	PC_4 (I/O)
PC_3/A_3	PC_3 (I/O)
PC_2/A_2	PC_2 (I/O)
PC_1/A_1	PC_1 (I/O)
PC_0/A_0	PC_0 (I/O)

Pin functions in mode 6*	Pin functions in modes 4 and 5
PC_7 (input)/ A_7 (output)	A_7 (output)
PC_6 (input)/ A_6 (output)	A_6 (output)
PC_5 (input)/ A_5 (output)	A_5 (output)
PC_4 (input)/ A_4 (output)	A_4 (output)
PC_3 (input)/ A_3 (output)	A_3 (output)
PC_2 (input)/ A_2 (output)	A_2 (output)
PC_1 (input)/ A_1 (output)	A_1 (output)
PC_0 (input)/ A_0 (output)	A_0 (output)

Note: * Modes 6 and 7 are provided in the on-chip ROM version only.

Figure 9-15 Port C Pin Functions

9.10.2 Register Configuration (On-Chip ROM Version Only)

Table 9-17 shows the port C register configuration.

Table 9-17 Port C Registers

Name	Abbreviation	R/W	Initial Value	Address *
Port C data direction register	PCDDR	W	H'00	H'FEBB
Port C data register	PCDR	R/W	H'00	H'FF6B
Port C register	PORTC	R	Undefined	H'FF5B
Port C MOS pull-up control register	PCPCR	R/W	H'00	H'FF72

Note: * Lower 16 bits of the address.

Port C Data Direction Register (PCDDR) (On-Chip ROM Version Only)

Bit	:	7	6	5	4	3	2	1	0
		PC7DDR	PC6DDR	PC5DDR	PC4DDR	PC3DDR	PC2DDR	PC1DDR	PC0DDR
Initial value	:	0	0	0	0	0	0	0	0
R/W	:	W	W	W	W	W	W	W	W

PCDDR is an 8-bit write-only register, the individual bits of which specify input or output for the pins of port C. PCDDR cannot be read; if it is, an undefined value will be read.

PCDDR is initialized to H'00 by a power-on reset and in hardware standby mode. It retains its prior state after a manual reset*, and in software standby mode. The OPE bit in SBYCR is used to select whether the address output pins retain their output state or become high-impedance when a transition is made to software standby mode.

Note: * Manual reset is only supported in the H8S/2357 ZTAT.

- Mode 7
  Setting a PCDDR bit to 1 makes the corresponding port C pin an output port, while clearing the bit to 0 makes the pin an input port.
- Mode 6
  Setting a PCDDR bit to 1 makes the corresponding port C pin an address output, while clearing the bit to 0 makes the pin an input port.
- Modes 4 and 5
  The corresponding port C pins are address outputs irrespective of the value of the PCDDR bits.

Port C Data Register (PCDR) (On-Chip ROM Version Only)

Bit	:	7	6	5	4	3	2	1	0
		PC7DR	PC6DR	PC5DR	PC4DR	PC3DR	PC2DR	PC1DR	PC0DR
Initial value	:	0	0	0	0	0	0	0	0
R/W	:	R/W	R/W	R/W	R/W	R/W	R/W	R/W	R/W

PCDR is an 8-bit readable/writable register that stores output data for the port C pins (PC_7 to PC_0).

PCDR is initialized to H'00 by a power-on reset, and in hardware standby mode. It retains its prior state after a manual reset*, and in software standby mode.

Note: * Manual reset is only supported in the H8S/2357 ZTAT.

Port C Register (PORTC) (On-Chip ROM Version Only)

Bit :	7	6	5	4	3	2	1	0
	PC7	PC6	PC5	PC4	PC3	PC2	PC1	PC0
Initial value :	—*	—*	—*	—*	—*	—*	—*	—*
R/W :	R	R	R	R	R	R	R	R

Note: * Determined by state of pins PC_7 to PC_0.

PORTC is an 8-bit read-only register that shows the pin states. It cannot be written to. Writing of output data for the port C pins (PC_7 to PC_0) must always be performed on PCDR.

If a port C read is performed while PCDDR bits are set to 1, the PCDR values are read. If a port C read is performed while PCDDR bits are cleared to 0, the pin states are read.

After a power-on reset and in hardware standby mode, PORTC contents are determined by the pin states, as PCDDR and PCDR are initialized. PORTC retains its prior state after a manual reset*, and in software standby mode.

Note: * Manual reset is only supported in the H8S/2357 ZTAT.

Port C MOS Pull-Up Control Register (PCPCR) (On-Chip ROM Version Only)

Bit :	7	6	5	4	3	2	1	0
	PC7PCR	PC6PCR	PC5PCR	PC4PCR	PC3PCR	PC2PCR	PC1PCR	PC0PCR
Initial value :	0	0	0	0	0	0	0	0
R/W :	R/W	R/W	R/W	R/W	R/W	R/W	R/W	R/W

Note: Setting is prohibited in the H8S/2352, H8S/2394, H8S/2392, and H8S/2390.

PCPCR is an 8-bit readable/writable register that controls the MOS input pull-up function incorporated into port C on an individual bit basis.

When a PCDDR bit is cleared to 0 (input port setting) in mode 6 or 7, setting the corresponding PCPCR bit to 1 turns on the MOS input pull-up for the corresponding pin.

PCPCR is initialized to H'00 by a power-on reset, and in hardware standby mode. It retains its prior state after a manual reset*, and in software standby mode.

Note: * Manual reset is only supported in the H8S/2357 ZTAT.

9.10.3 Pin Functions

Mode 7 (On-Chip ROM Version Only): In mode 7, port C pins function as I/O ports. Input or output can be specified for each pin on an individual bit basis. Setting a PCDDR bit to 1 makes the corresponding port C pin an output port, while clearing the bit to 0 makes the pin an input port.

Port C pin functions in mode 7 are shown in figure 9-16.

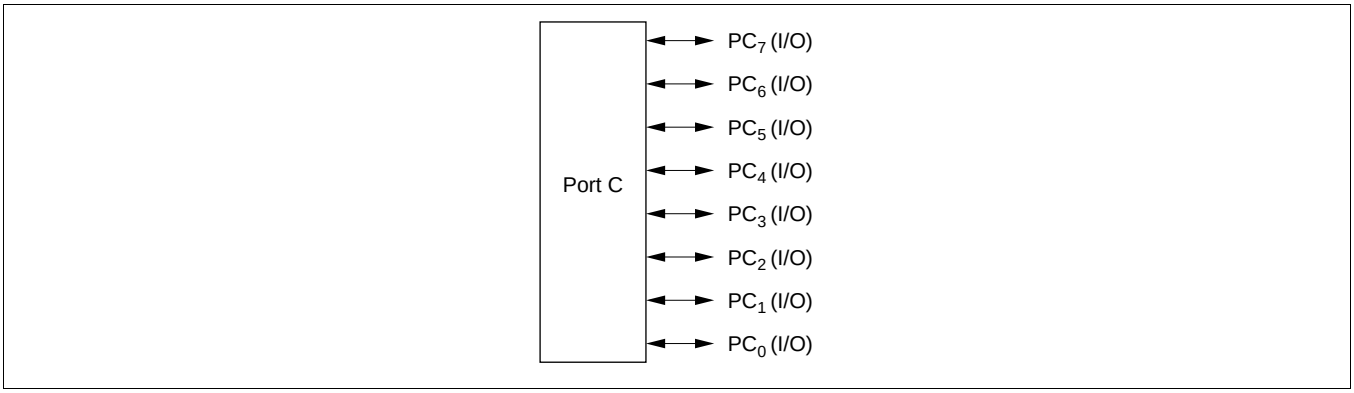

Figure 9-16 Port C Pin Functions (Mode 7)

Mode 6 (On-Chip ROM Version Only): In mode 6, port C pins function as address outputs or input ports. Input or output can be specified on an individual bit basis. Setting a PCDDR bit to 1 makes the corresponding port C pin an address output, while clearing the bit to 0 makes the pin an input port.

Port C pin functions in mode 6 are shown in figure 9-17.

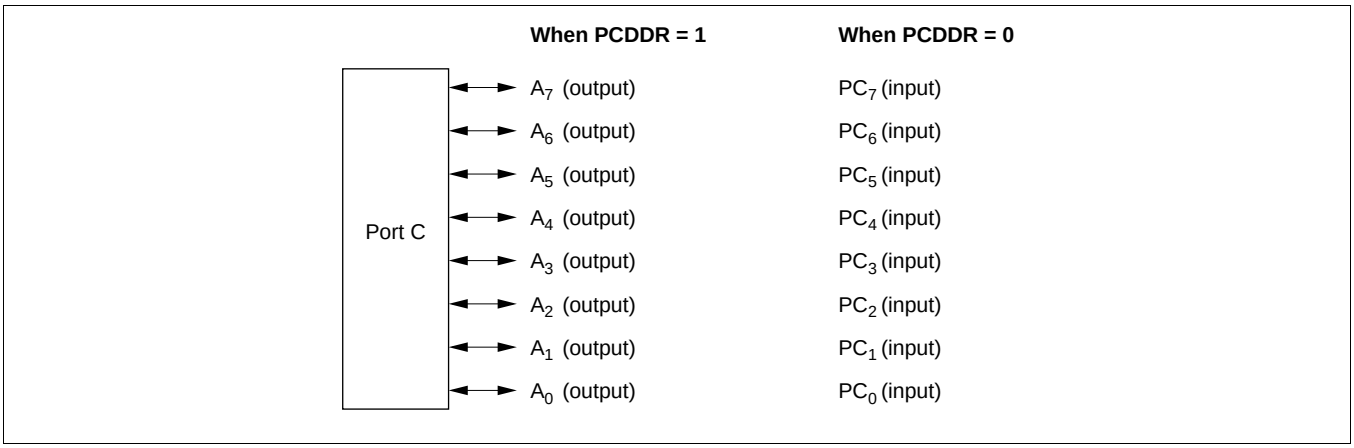

Figure 9-17 Port C Pin Functions (Mode 6)

Modes 4 and 5: In modes 4 and 5, port C pins are automatically designated as address outputs.

Port C pin functions in modes 4 and 5 are shown in figure 9-18.

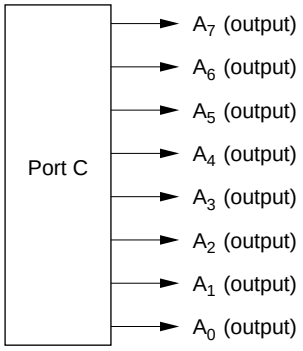

Figure 9-18 Port C Pin Functions (Modes 4 and 5)

9.10.4 MOS Input Pull-Up Function (On-Chip ROM Version Only)

Port C has a on-chip MOS input pull-up function that can be controlled by software. This MOS input pull-up function can be used in modes 6 and 7, and can be specified as on or off on an individual bit basis.

When a PCDDR bit is cleared to 0 in mode 6 or 7, setting the corresponding PCPCR bit to 1 turns on the MOS input pull-up for that pin.

The MOS input pull-up function is in the off state after a power-on reset, and in hardware standby mode. The prior state is retained after a manual reset*, and in software standby mode.

Table 9-18 summarizes the MOS input pull-up states.

Note: * Manual reset is only supported in the H8S/2357 ZTAT.

Table 9-18 MOS Input Pull-Up States (Port C)

Modes	Power-On Reset	Hardware Standby Mode	Manual Reset*	Software Standby Mode	In Other Operations
6, 7	OFF		ON/OFF		
4, 5			OFF		

Legend:
OFF: MOS input pull-up is always off.
ON/OFF: On when PCDDR = 0 and PCPCR = 1; otherwise off.
Note: * Manual reset is only supported in the H8S/2357 ZTAT.

9.11 Port D

9.11.1 Overview

Port D is an 8-bit I/O port. Port D has a data bus I/O function, and the pin functions change according to the operating mode. In the H8S/2352, port D pins are dedicated data bus pins.

Port D has a on-chip MOS input pull-up function that can be controlled by software (on-chip ROM version only).

Figure 9-19 shows the port D pin configuration.

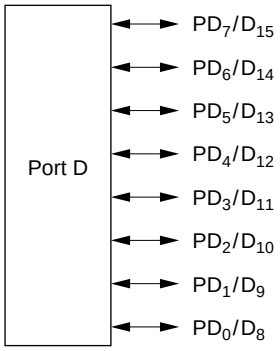

Port D pins	Pin functions in mode 7*
PD_7/D_{15}	PD_7 (I/O)
PD_6/D_{14}	PD_6 (I/O)
PD_5/D_{13}	PD_5 (I/O)
PD_4/D_{12}	PD_4 (I/O)
PD_3/D_{11}	PD_3 (I/O)
PD_2/D_{10}	PD_2 (I/O)
PD_1/D_9	PD_1 (I/O)
PD_0/D_8	PD_0 (I/O)

Pin functions in modes 4 to 6*
D_{15} (I/O)
D_{14} (I/O)
D_{13} (I/O)
D_{12} (I/O)
D_{11} (I/O)
D_{10} (I/O)
D_9 (I/O)
D_8 (I/O)

Note: * Modes 6 and 7 are provided in the on-chip ROM version only.

Figure 9-19 Port D Pin Functions

9.11.2 Register Configuration (On-Chip ROM Version Only)

Table 9-19 shows the port D register configuration.

Table 9-19 Port D Registers

Name	Abbreviation	R/W	Initial Value	Address *
Port D data direction register	PDDDR	W	H'00	H'FEBC
Port D data register	PDDR	R/W	H'00	H'FF6C
Port D register	PORTD	R	Undefined	H'FF5C
Port D MOS pull-up control register	PDPCR	R/W	H'00	H'FF73

Note: * Lower 16 bits of the address.

Port D Data Direction Register (PDDDR) (On-Chip ROM Version Only)

Bit	:	7	6	5	4	3	2	1	0
		PD7DDR	PD6DDR	PD5DDR	PD4DDR	PD3DDR	PD2DDR	PD1DDR	PD0DDR
Initial value	:	0	0	0	0	0	0	0	0
R/W	:	W	W	W	W	W	W	W	W

PDDDR is an 8-bit write-only register, the individual bits of which specify input or output for the pins of port D. PDDDR cannot be read; if it is, an undefined value will be read.

PDDDR is initialized to H'00 by a power-on reset, and in hardware standby mode. It retains its prior state after a manual reset*, and in software standby mode.

Note: * Manual reset is only supported in the H8S/2357 ZTAT.

- Mode 7
  Setting a PDDDR bit to 1 makes the corresponding port D pin an output port, while clearing the bit to 0 makes the pin an input port.

- Modes 4 to 6
  The input/output direction specification by PDDDR is ignored, and port D is automatically designated for data I/O.

Port D Data Register (PDDR) (On-Chip ROM Version Only)

Bit	:	7	6	5	4	3	2	1	0
		PD7DR	PD6DR	PD5DR	PD4DR	PD3DR	PD2DR	PD1DR	PD0DR
Initial value	:	0	0	0	0	0	0	0	0
R/W	:	R/W	R/W	R/W	R/W	R/W	R/W	R/W	R/W

PDDR is an 8-bit readable/writable register that stores output data for the port D pins (PD_7 to PD_0).

PDDR is initialized to H'00 by a power-on reset, and in hardware standby mode. It retains its prior state after a manual reset*, and in software standby mode.

Note: * Manual reset is only supported in the H8S/2357 ZTAT.

Port D Register (PORTD) (On-Chip ROM Version Only)

Bit :	7	6	5	4	3	2	1	0
	PD7	PD6	PD5	PD4	PD3	PD2	PD1	PD0
Initial value :	—*	—*	—*	—*	—*	—*	—*	—*
R/W :	R	R	R	R	R	R	R	R

Note: * Determined by state of pins PD_7 to PD_0.

PORTD is an 8-bit read-only register that shows the pin states. It cannot be written to. Writing of output data for the port D pins (PD_7 to PD_0) must always be performed on PDDR.

If a port D read is performed while PDDDR bits are set to 1, the PDDR values are read. If a port D read is performed while PDDDR bits are cleared to 0, the pin states are read.

After a power-on reset and in hardware standby mode, PORTD contents are determined by the pin states, as PDDDR and PDDR are initialized. PORTD retains its prior state after a manual reset*, and in software standby mode.

Note: * Manual reset is only supported in the H8S/2357 ZTAT.

Port D MOS Pull-Up Control Register (PDPCR) (On-Chip ROM Version Only)

Bit :	7	6	5	4	3	2	1	0
	PD7PCR	PD6PCR	PD5PCR	PD4PCR	PD3PCR	PD2PCR	PD1PCR	PD0PCR
Initial value :	0	0	0	0	0	0	0	0
R/W :	R/W	R/W	R/W	R/W	R/W	R/W	R/W	R/W

Note: Setting is prohibited in the H8S/2352, H8S/2394, H8S/2392, and H8S/2390.

PDPCR is an 8-bit readable/writable register that controls the MOS input pull-up function incorporated into port D on an individual bit basis.

When a PDDDR bit is cleared to 0 (input port setting) in mode 7, setting the corresponding PDPCR bit to 1 turns on the MOS input pull-up for the corresponding pin.

PDPCR is initialized to H'00 by a power-on reset, and in hardware standby mode. It retains its prior state after a manual reset*, and in software standby mode.

Note: * Manual reset is only supported in the H8S/2357 ZTAT.

9.11.3 Pin Functions

Modes 7 (On-Chip ROM Version Only): In mode 7, port D pins function as I/O ports. Input or output can be specified for each pin on an individual bit basis. Setting a PDDDR bit to 1 makes the corresponding port D pin an output port, while clearing the bit to 0 makes the pin an input port.

Port D pin functions in mode 7 are shown in figure 9-20.

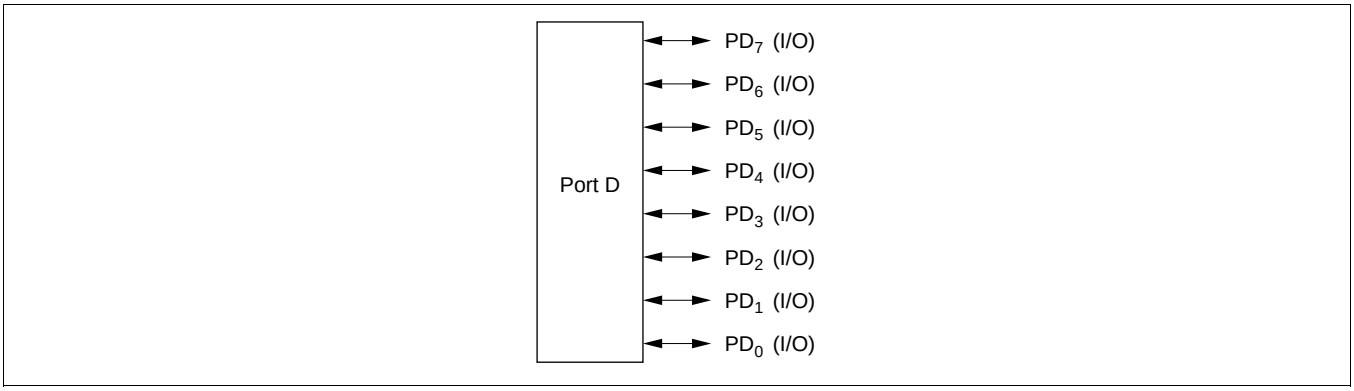

Figure 9-20 Port D Pin Functions (Mode 7)

Modes 4 to 6*: In modes 4 to 6, port D pins are automatically designated as data I/O pins.

Port D pin functions in modes 4 to 6 are shown in figure 9-21.

Note: * Mode 6 is provided in the on-chip ROM version only.

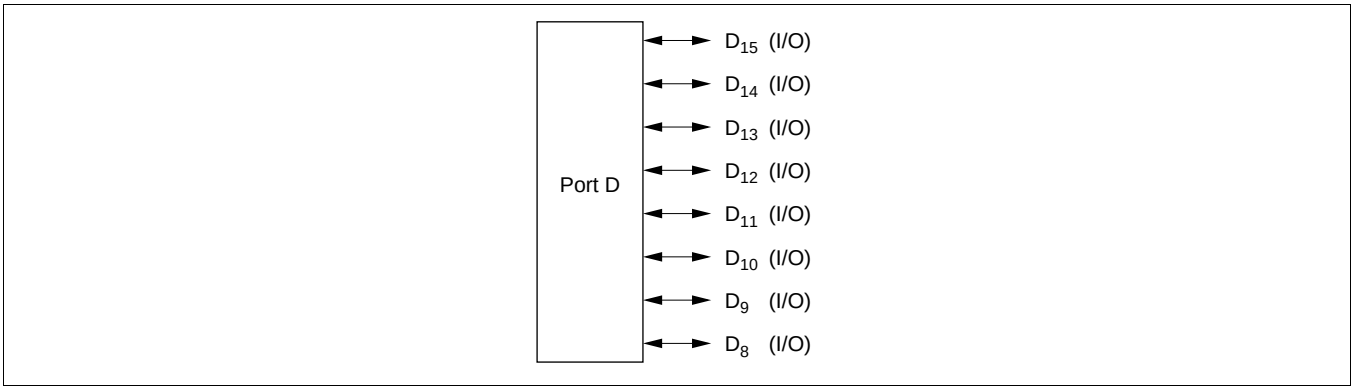

Figure 9-21 Port D Pin Functions (Modes 4 to 6)

9.11.4 MOS Input Pull-Up Function (On-Chip ROM Version Only)

Port D has a on-chip MOS input pull-up function that can be controlled by software. This MOS input pull-up function can be used in mode 7, and can be specified as on or off on an individual bit basis.

When a PDDDR bit is cleared to 0 in mode 7, setting the corresponding PDPCR bit to 1 turns on the MOS input pull-up for that pin.

The MOS input pull-up function is in the off state after a power-on reset, and in hardware standby mode. The prior state is retained after a manual reset*, and in software standby mode.

Table 9-20 summarizes the MOS input pull-up states.

Note: * Manual reset is only supported in the H8S/2357 ZTAT.

Table 9-20 MOS Input Pull-Up States (Port D)

Modes	Power-On Reset	Hardware Standby Mode	Manual Reset*	Software Standby Mode	In Other Operations
7	OFF		ON/OFF		
4 to 6			OFF		

Legend:

OFF: MOS input pull-up is always off.

ON/OFF: On when PDDDR = 0 and PDPCR = 1; otherwise off.

Note: * Manual reset is only supported in the H8S/2357 ZTAT.

9.12 Port E

9.12.1 Overview

Port E is an 8-bit I/O port. Port E has a data bus I/O function, and the pin functions change according to the operating mode and whether 8-bit or 16-bit bus mode is selected.

Port E has a on-chip MOS input pull-up function that can be controlled by software (on-chip ROM version only).

Figure 9-22 shows the port E pin configuration.

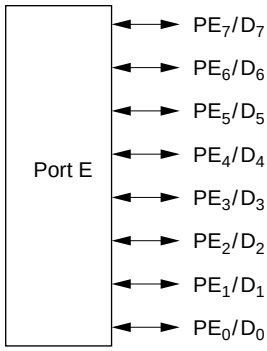

Port E pins	Pin functions in mode 7*
PE_7/D_7	PE_7 (I/O)
PE_6/D_6	PE_6 (I/O)
PE_5/D_5	PE_5 (I/O)
PE_4/D_4	PE_4 (I/O)
PE_3/D_3	PE_3 (I/O)
PE_2/D_2	PE_2 (I/O)
PE_1/D_1	PE_1 (I/O)
PE_0/D_0	PE_0 (I/O)

Pin functions in modes 4 to 6*
PE_7 (I/O)/D_7 (I/O)
PE_6 (I/O)/D_6 (I/O)
PE_5 (I/O)/D_5 (I/O)
PE_4 (I/O)/D_4 (I/O)
PE_3 (I/O)/D_3 (I/O)
PE_2 (I/O)/D_2 (I/O)
PE_1 (I/O)/D_1 (I/O)
PE_0 (I/O)/D_0 (I/O)

Note: * Modes 6 and 7 are provided in the on-chip ROM version only.

Figure 9-22 Port E Pin Functions

9.12.2 Register Configuration

Table 9-21 shows the port E register configuration.

Table 9-21 Port E Registers

Name	Abbreviation	R/W	Initial Value	Address*[1]
Port E data direction register	PEDDR	W	H'00	H'FEBD
Port E data register	PEDR	R/W	H'00	H'FF6D
Port E register	PORTE	R	Undefined	H'FF5D
Port E MOS pull-up control register*[2]	PEPCR	R/W	H'00	H'FF74

Notes: 1. Lower 16 bits of the address.
2. PEPCR settings are prohibited in the ROMless version.

Port E Data Direction Register (PEDDR)

Bit :	7	6	5	4	3	2	1	0
	PE7DDR	PE6DDR	PE5DDR	PE4DDR	PE3DDR	PE2DDR	PE1DDR	PE0DDR
Initial value :	0	0	0	0	0	0	0	0
R/W :	W	W	W	W	W	W	W	W

PEDDR is an 8-bit write-only register, the individual bits of which specify input or output for the pins of port E. PEDDR cannot be read; if it is, an undefined value will be read.

PEDDR is initialized to H'00 by a power-on reset, and in hardware standby mode. It retains its prior state after a manual reset*, and in software standby mode.

Note: * Manual reset is only supported in the H8S/2357 ZTAT.

- Mode 7*

  Setting a PEDDR bit to 1 makes the corresponding port E pin an output port, while clearing the bit to 0 makes the pin an input port.

Note: * Modes 6 and 7 are provided in the on-chip ROM version only.

- Modes 4 to 6*

  When 8-bit bus mode has been selected, port E pins function as I/O ports. Setting a PEDDR bit to 1 makes the corresponding port E pin an output port, while clearing the bit to 0 makes the pin an input port.

  When 16-bit bus mode has been selected, the input/output direction specification by PEDDR is ignored, and port E is designated for data I/O.

  For details of 8-bit and 16-bit bus modes, see section 6, Bus Controller.

Port E Data Register (PEDR)

Bit :	7	6	5	4	3	2	1	0
	PE7DR	PE6DR	PE5DR	PE4DR	PE3DR	PE2DR	PE1DR	PE0DR
Initial value :	0	0	0	0	0	0	0	0
R/W :	R/W	R/W	R/W	R/W	R/W	R/W	R/W	R/W

PEDR is an 8-bit readable/writable register that stores output data for the port E pins (PE_7 to PE_0).

PEDR is initialized to H'00 by a power-on reset, and in hardware standby mode. It retains its prior state after a manual reset*, and in software standby mode.

Note: * Manual reset is only supported in the H8S/2357 ZTAT.

Port E Register (PORTE)

Bit	:	7	6	5	4	3	2	1	0
		PE7	PE6	PE5	PE4	PE3	PE2	PE1	PE0
Initial value	:	—*	—*	—*	—*	—*	—*	—*	—*
R/W	:	R	R	R	R	R	R	R	R

Note: * Determined by state of pins PE_7 to PE_0.

PORTE is an 8-bit read-only register that shows the pin states. It cannot be written to. Writing of output data for the port E pins (PE_7 to PE_0) must always be performed on PEDR.

If a port E read is performed while PEDDR bits are set to 1, the PEDR values are read. If a port E read is performed while PEDDR bits are cleared to 0, the pin states are read.

After a power-on reset and in hardware standby mode, PORTE contents are determined by the pin states, as PEDDR and PEDR are initialized. PORTE retains its prior state after a manual reset*, and in software standby mode.

Note: * Manual reset is only supported in the H8S/2357 ZTAT.

Port E MOS Pull-Up Control Register (PEPCR) (On-Chip ROM Version Only)

Bit	:	7	6	5	4	3	2	1	0
		PE7PCR	PE6PCR	PE5PCR	PE4PCR	PE3PCR	PE2PCR	PE1PCR	PE0PCR
Initial value	:	0	0	0	0	0	0	0	0
R/W	:	R/W	R/W	R/W	R/W	R/W	R/W	R/W	R/W

Note: Setting is prohibited in the H8S/2352, H8S/2394, H8S/2392, and H8S/2390.

PEPCR is an 8-bit readable/writable register that controls the MOS input pull-up function incorporated into port E on an individual bit basis.

When a PEDDR bit is cleared to 0 (input port setting) when 8-bit bus mode is selected in mode 4, 5, or 6, or in mode 7, setting the corresponding PEPCR bit to 1 turns on the MOS input pull-up for the corresponding pin.

PEPCR is initialized to H'00 by a power-on reset, and in hardware standby mode. It retains its prior state after a manual reset*, and in software standby mode.

Note: * Manual reset is only supported in the H8S/2357 ZTAT.

9.12.3 Pin Functions

Mode 7*: In mode 7, port E pins function as I/O ports. Input or output can be specified for each pin on a bit-by-bit basis. Setting a PEDDR bit to 1 makes the corresponding port E pin an output port, while clearing the bit to 0 makes the pin an input port.

Note: * Modes 6 and 7 are provided in the on-chip ROM version only.

Port E pin functions in mode 7 are shown in figure 9-23.

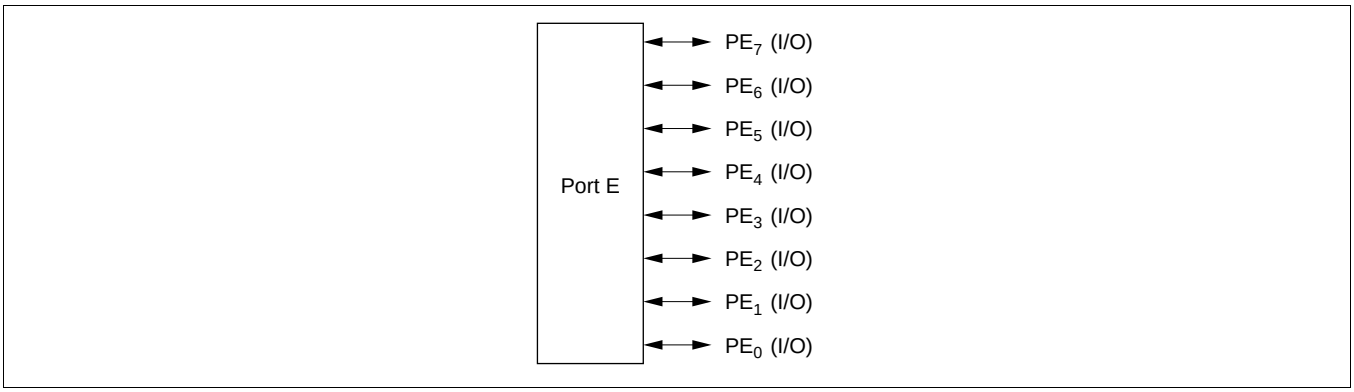

Figure 9-23 Port E Pin Functions (Mode 7)

Modes 4 to 6*: In modes 4 to 6, when 8-bit access is designated and 8-bit bus mode is selected, port E pins are automatically designated as I/O ports. Setting a PEDDR bit to 1 makes the corresponding port E pin an output port, while clearing the bit to 0 makes the pin an input port.

When 16-bit bus mode is selected, the input/output direction specification by PEDDR is ignored, and port E is designated for data I/O.

Port E pin functions in modes 4 to 6 are shown in figure 9-24.

Note: * Modes 6 and 7 are provided in the on-chip ROM version only.

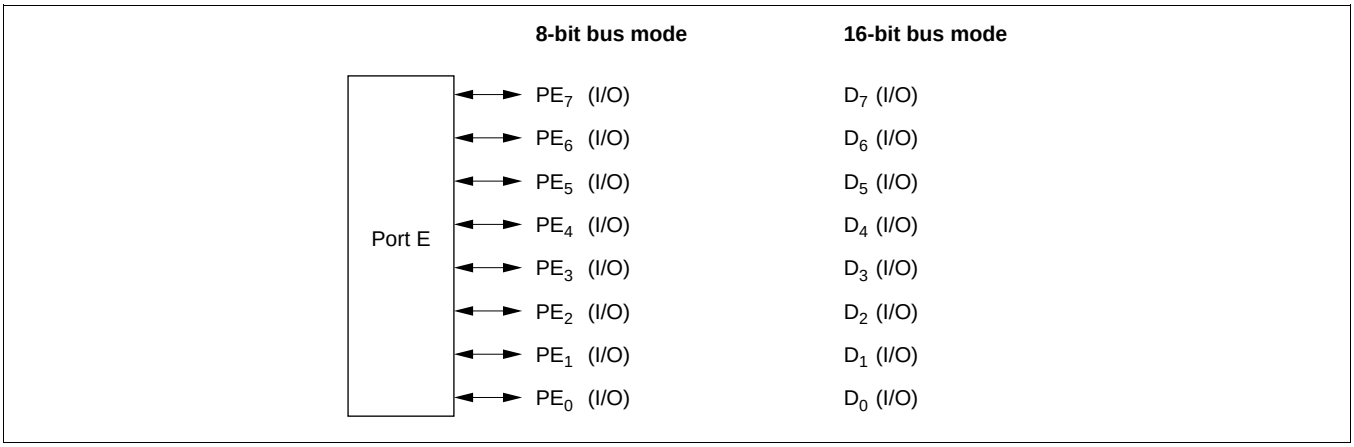

Figure 9-24 Port E Pin Functions (Modes 4 to 6)

9.12.4 MOS Input Pull-Up Function (On-Chip ROM Version Only)

Port E has a on-chip MOS input pull-up function that can be controlled by software. This MOS input pull-up function can be used in modes 4 to 6 when 8-bit bus mode is selected, or in mode 7, and can be specified as on or off on an individual bit basis.

When a PEDDR bit is cleared to 0 in mode 4, 5, or 6 when 8-bit bus mode is selected, or in mode 7, setting the corresponding PEPCR bit to 1 turns on the MOS input pull-up for that pin.

The MOS input pull-up function is in the off state after a power-on reset, and in hardware standby mode. The prior state is retained after a manual reset*, and in software standby mode.

Table 9-22 summarizes the MOS input pull-up states.

Note: * Manual reset is only supported in the H8S/2357 ZTAT.

Table 9-22 MOS Input Pull-Up States (Port E)

Modes		Power-On Reset	Hardware Standby Mode	Manual Reset*	Software Standby Mode	In Other Operations
7		OFF		ON/OFF		
4 to 6	8-bit bus					
	16-bit bus			OFF		

Legend:

OFF: MOS input pull-up is always off.

ON/OFF: On when PEDDR = 0 and PEPCR = 1; otherwise off.

Note: * Manual reset is only supported in the H8S/2357 ZTAT.

9.13 Port F

9.13.1 Overview

Port F is an 8-bit I/O port. Port F pins also function as bus control signal input/output pins ($\overline{AS}$, $\overline{RD}$, $\overline{HWR}$, $\overline{LWR}$, $\overline{LCAS}$, $\overline{WAIT}$, $\overline{BREQO}$, $\overline{BREQ}$, and $\overline{BACK}$) and the system clock (ø) output pin.

Figure 9-25 shows the port F pin configuration.

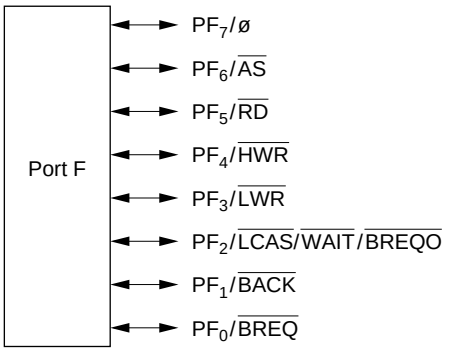

Note: * Modes 6 and 7 are provided in the on-chip ROM version only.

Figure 9-25 Port F Pin Functions

9.13.2 Register Configuration

Table 9-23 shows the port F register configuration.

Table 9-23 Port F Registers

Name	Abbreviation	R/W	Initial Value	Address *[1]
Port F data direction register	PFDDR	W	H'80/H'00*[2]	H'FEBE
Port F data register	PFDR	R/W	H'00	H'FF6E
Port F register	PORTF	R	Undefined	H'FF5E

Notes: 1. Lower 16 bits of the address.
2. Initial value depends on the mode.

Port F Data Direction Register (PFDDR)

Bit	:	7	6	5	4	3	2	1	0
		PF7DDR	PF6DDR	PF5DDR	PF4DDR	PF3DDR	PF2DDR	PF1DDR	PF0DDR
Mode 7									
Initial value	:	0	0	0	0	0	0	0	0
R/W	:	W	W	W	W	W	W	W	W
Modes 4 to 6									
Initial value	:	1	0	0	0	0	0	0	0
R/W	:	W	W	W	W	W	W	W	W

PFDDR is an 8-bit write-only register, the individual bits of which specify input or output for the pins of port F. PFDDR cannot be read; if it is, an undefined value will be read.

PFDDR is initialized by a power-on reset, and in hardware standby mode, to H'80 in modes 4 to 6, and to H'00 in mode 7. It retains its prior state after a manual reset*, and in software standby mode. The OPE bit in SBYCR is used to select whether the bus control output pins retain their output state or become high-impedance when a transition is made to software standby mode.

Note: * Manual reset is only supported in the H8S/2357 ZTAT.

- Mode 7*

  Setting a PFDDR bit to 1 makes the corresponding port F pin PF_6 to PF_0 an output port, or in the case of pin PF_7, the ø output pin. Clearing the bit to 0 makes the pin an input port.

Note: * Modes 6 and 7 are provided in the on-chip ROM version only.

- Modes 4 to 6*

  Pin PF_7 functions as the ø output pin when the corresponding PFDDR bit is set to 1, and as an input port when the bit is cleared to 0.

  The input/output direction specified by PFDDR is ignored for pins PF_6 to PF_3, which are automatically designated as bus control outputs ($\overline{AS}$, $\overline{RD}$, $\overline{HWR}$, and $\overline{LWR}$).

  Pins PF_2 to PF_0 are designated as bus control input/output pins ($\overline{LCAS}$, $\overline{WAIT}$, $\overline{BREQO}$, $\overline{BACK}$, and $\overline{BREQ}$) by means of bus controller settings. At other times, setting a PFDDR bit to 1 makes the corresponding port F pin an output port, while clearing the bit to 0 makes the pin an input port.

Port F Data Register (PFDR)

Bit :	7	6	5	4	3	2	1	0
	PF7DR	PF6DR	PF5DR	PF4DR	PF3DR	PF2DR	PF1DR	PF0DR
Initial value :	0	0	0	0	0	0	0	0
R/W :	R/W	R/W	R/W	R/W	R/W	R/W	R/W	R/W

PFDR is an 8-bit readable/writable register that stores output data for the port F pins (PF_7 to PF_0).

PFDR is initialized to H'00 by a power-on reset, and in hardware standby mode. It retains its prior state after a manual reset*, and in software standby mode.

Note: * Manual reset is only supported in the H8S/2357 ZTAT.

Port F Register (PORTF)

Bit :	7	6	5	4	3	2	1	0
	PF7	PF6	PF5	PF4	PF3	PF2	PF1	PF0
Initial value :	—*	—*	—*	—*	—*	—*	—*	—*
R/W :	R	R	R	R	R	R	R	R

Note: * Determined by state of pins PF_7 to PF_0.

PORTF is an 8-bit read-only register that shows the pin states. Writing of output data for the port F pins (PF_7 to PF_0) must always be performed on PFDR.

If a port F read is performed while PFDDR bits are set to 1, the PFDR values are read. If a port F read is performed while PFDDR bits are cleared to 0, the pin states are read.

After a power-on reset and in hardware standby mode, PORTF contents are determined by the pin states, as PFDDR and PFDR are initialized. PORTF retains its prior state after a manual reset*, and in software standby mode.

Note: * Manual reset is only supported in the H8S/2357 ZTAT.

9.13.3 Pin Functions

Port F pins also function as bus control signal input/output pins ($\overline{AS}$, $\overline{RD}$, $\overline{HWR}$, $\overline{LWR}$, $\overline{LCAS}$, $\overline{WAIT}$, $\overline{BREQO}$, $\overline{BREQ}$, and $\overline{BACK}$) and the system clock (ø) output pin. The pin functions differ between modes 4 to 6, and mode 7. Port F pin functions are shown in table 9-24.

Table 9-24 Port F Pin Functions

Pin	Selection Method and Pin Functions
PF_7/ø	The pin function is switched as shown below according to bit PF7DDR.

PF7DDR	0	1
Pin function	PF_7 input pin	ø output pin

Pin	Selection Method and Pin Functions
PF_6/$\overline{AS}$	The pin function is switched as shown below according to the operating mode and bit PF6DDR.

Operating Mode	Modes 4 to 6*	Mode 7*	
PF6DDR	—	0	1
Pin function	$\overline{AS}$ output pin	PF_6 input pin	PF_6 output pin

Note: * Modes 6 and 7 are provided in the on-chip ROM version only.

Pin	Selection Method and Pin Functions
PF_5/$\overline{RD}$	The pin function is switched as shown below according to the operating mode and bit PF5DDR.

Operating Mode	Modes 4 to 6*	Mode 7*	
PF5DDR	—	0	1
Pin function	$\overline{RD}$ output pin	PF_5 input pin	PF_5 output pin

Note: * Modes 6 and 7 are provided in the on-chip ROM version only.

Pin	Selection Method and Pin Functions
PF_4/$\overline{HWR}$	The pin function is switched as shown below according to the operating mode and bit PF4DDR.

Operating Mode	Modes 4 to 6*	Mode 7*	
PF4DDR	—	0	1
Pin function	$\overline{HWR}$ output pin	PF_4 input pin	PF_4 output pin

Note: * Modes 6 and 7 are provided in the on-chip ROM version only.

Pin	Selection Method and Pin Functions
PF_3/$\overline{LWR}$	The pin function is switched as shown below according to the operating mode and bit PF3DDR.

Operating Mode	Modes 4 to 6*	Mode 7*	
PF3DDR	—	0	1
Pin function	$\overline{LWR}$ output pin	PF_3 input pin	PF_3 output pin

Note: * Modes 6 and 7 are provided in the on-chip ROM version only.

Pin	Selection Method and Pin Functions

PF_2/$\overline{LCAS}$/$\overline{WAIT}$/$\overline{BREQO}$

The pin function is switched as shown below according to the combination of the operating mode, and bits RMTS2 to RMTS0, LCASS, BREQOE, WAITE, ABW5 to ABW2, and PF2DDR.

Operating Mode	Modes 4 to 6*[2]					Mode 7*[2]	
LCASS	0*[1]	1				—	
BREQOE	—	0			1	—	
WAITE	—	0		1	—	—	
PF2DDR	—	0	1	—	—	0	1
Pin function	$\overline{LCAS}$ output pin	PF_2 input pin	PF_2 output pin	$\overline{WAIT}$ input pin	$\overline{BREQO}$ output pin	PF_2 input pin	PF_2 output pin

Note: 1. Only in DRAM space 16-bit access in modes 4 to 6 when RMTS2 to RMTS0 = B'001 to B'011.
2. Modes 6 and 7 are provided in the on-chip ROM version only.

PF_1/$\overline{BACK}$

The pin function is switched as shown below according to the combination of the operating mode, and bits BRLE and PF1DDR.

Operating Mode	Modes 4 to 6*			Mode 7*	
BRLE	0		1	—	
PF1DDR	0	1	—	0	1
Pin function	PF_1 input pin	PF_1 output pin	$\overline{BACK}$ output pin	PF_1 input pin	PF_1 output pin

Note: * Modes 6 and 7 are provided in the on-chip ROM version only.

PF_0/$\overline{BREQ}$

The pin function is switched as shown below according to the combination of the operating mode, and bits BRLE and PF0DDR.

Operating Mode	Modes 4 to 6*			Mode 7*	
BRLE	0		1	—	
PF0DDR	0	1	—	0	1
Pin function	PF_0 input pin	PF_0 output pin	$\overline{BREQ}$ input pin	PF_0 input pin	PF_0 output pin

Note: * Modes 6 and 7 are provided in the on-chip ROM version only.

9.14 Port G

9.14.1 Overview

Port G is a 5-bit I/O port. Port G pins also function as bus control signal output pins ($\overline{CS0}$ to $\overline{CS3}$, and $\overline{CAS}$).

Figure 9-26 shows the port G pin configuration.

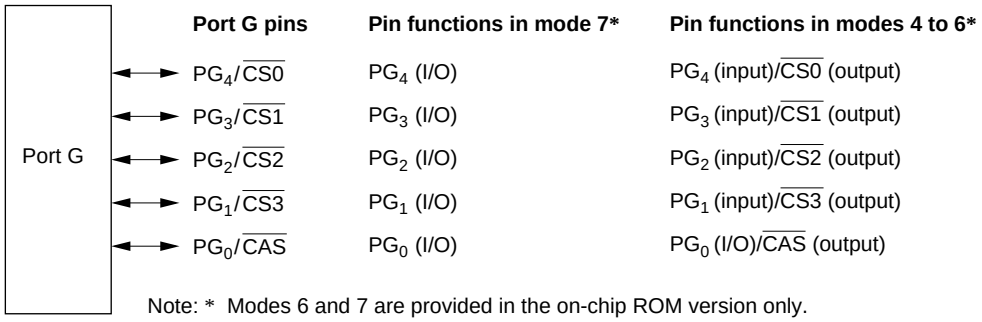

Figure 9-26 Port G Pin Functions

9.14.2 Register Configuration

Table 9-25 shows the port G register configuration.

Table 9-25 Port G Registers

Name	Abbreviation	R/W	Initial Value*2	Address*1
Port G data direction register	PGDDR	W	H'10/H'00*3	H'FEBF
Port G data register	PGDR	R/W	H'00	H'FF6F
Port G register	PORTG	R	Undefined	H'FF5F

Notes: 1. Lower 16 bits of the address.
2. Value of bits 4 to 0.
3. Initial value depends on the mode.

Port G Data Direction Register (PGDDR)

Bit	:	7	6	5	4	3	2	1	0
		—	—	—	PG4DDR	PG3DDR	PG2DDR	PG1DDR	PG0DDR
Modes 6, 7									
Initial value	:	Undefined	Undefined	Undefined	0	0	0	0	0
R/W	:	—	—	—	W	W	W	W	W
Modes 4, 5									
Initial value	:	Undefined	Undefined	Undefined	1	0	0	0	0
R/W	:	—	—	—	W	W	W	W	W

PGDDR is an 8-bit write-only register, the individual bits of which specify input or output for the pins of port G. PGDDR cannot be read, and bits 7 to 5 are reserved. If PGDDR is read, an undefined value will be read.

The PG4DDR bit is initialized by a power-on reset and in hardware standby mode, to 1 in modes 4 and 5, and to 0 in modes 6 and 7. It retains its prior state after a manual reset* and in software standby mode. The OPE bit in SBYCR is used to select whether the bus control output pins retain their output state or become high-impedance when a transition is made to software standby mode.

Note: * Manual reset is only supported in the H8S/2357 ZTAT.

- Mode 7*

  Setting a PGDDR bit to 1 makes the corresponding port G pin an output port, while clearing the bit to 0 makes the pin an input port.

- Modes 4 to 6*

  Pins PG_4 to PG_1 function as bus control output pins ($\overline{CS0}$ to $\overline{CS3}$) when the corresponding PGDDR bits are set to 1, and as input ports when the bits are cleared to 0.

  Pin PG_0 functions as the $\overline{CAS}$ output pin when DRAM interface is designated. Otherwise, setting the corresponding PGDDR bit to 1 makes the pin an output port, while clearing the bit to 0 makes the pin an input port. For details of the DRAM interfaces, see section 6, Bus Controller.

Note: * Modes 6 and 7 are provided in the on-chip ROM version only.

Port G Data Register (PGDR)

Bit	:	7	6	5	4	3	2	1	0
		—	—	—	PG4DR	PG3DR	PG2DR	PG1DR	PG0DR
Initial value	:	Undefined	Undefined	Undefined	0	0	0	0	0
R/W	:	—	—	—	R/W	R/W	R/W	R/W	R/W

PGDR is an 8-bit readable/writable register that stores output data for the port G pins (PG_4 to PG_0).

Bits 7 to 5 are reserved; they return an undetermined value if read, and cannot be modified.

PGDR is initialized to H'00 (bits 4 to 0) by a power-on reset, and in hardware standby mode. It retains its prior state after a manual reset*, and in software standby mode.

Note: * Manual reset is only supported in the H8S/2357 ZTAT.

Port G Register (PORTG)

Bit :	7	6	5	4	3	2	1	0
	—	—	—	PG4	PG3	PG2	PG1	PG0
Initial value :	Undefined	Undefined	Undefined	—*	—*	—*	—*	—*
R/W :	—	—	—	R	R	R	R	R

Note: * Determined by state of pins PG_4 to PG_0.

PORTG is an 8-bit read-only register that shows the pin states. It cannot be written to. Writing of output data for the port G pins (PG_4 to PG_0) must always be performed on PGDR.

Bits 7 to 5 are reserved; they return an undetermined value if read, and cannot be modified.

If a port G read is performed while PGDDR bits are set to 1, the PGDR values are read. If a port G read is performed while PGDDR bits are cleared to 0, the pin states are read.

After a power-on reset and in hardware standby mode, PORTG contents are determined by the pin states, as PGDDR and PGDR are initialized. PORTG retains its prior state after a manual reset*, and in software standby mode.

Note: * Manual reset is only supported in the H8S/2357 ZTAT.

9.14.3 Pin Functions

Port G pins also function as bus control signal output pins ($\overline{CS0}$ to $\overline{CS3}$, and $\overline{CAS}$). The pin functions are different in mode 7, and modes 4 to 6. Port G pin functions are shown in table 9-26.

Table 9-26 Port G Pin Functions

<table>
<tr><th>Pin</th><th>Selection Method and Pin Functions</th></tr>
<tr><td>$PG_4/\overline{CS0}$</td><td>The pin function is switched as shown below according to the operating mode and bit PG4DDR.
<table>
<tr><td>Operating Mode</td><td colspan="2">Mode 7*</td><td colspan="2">Modes 4 to 6*</td></tr>
<tr><td>PG4DDR</td><td>0</td><td>1</td><td>0</td><td>1</td></tr>
<tr><td>Pin function</td><td>PG_4 input pin</td><td>PG_4 output pin</td><td>PG_4 input pin</td><td>$\overline{CS0}$ output pin</td></tr>
</table>
Note: * Modes 6 and 7 are provided in the on-chip ROM version only.</td></tr>
<tr><td>$PG_3/\overline{CS1}$</td><td>The pin function is switched as shown below according to the operating mode and bit PG3DDR.
<table>
<tr><td>Operating Mode</td><td colspan="2">Mode 7*</td><td colspan="2">Modes 4 to 6*</td></tr>
<tr><td>PG3DDR</td><td>0</td><td>1</td><td>0</td><td>1</td></tr>
<tr><td>Pin function</td><td>PG_3 input pin</td><td>PG_3 output pin</td><td>PG_3 input pin</td><td>$\overline{CS1}$ output pin</td></tr>
</table>
Note: * Modes 6 and 7 are provided in the on-chip ROM version only.</td></tr>
<tr><td>$PG_2/\overline{CS2}$</td><td>The pin function is switched as shown below according to the operating mode and bit PG2DDR.
<table>
<tr><td>Operating Mode</td><td colspan="2">Mode 7*</td><td colspan="2">Modes 4 to 6*</td></tr>
<tr><td>PG2DDR</td><td>0</td><td>1</td><td>0</td><td>1</td></tr>
<tr><td>Pin function</td><td>PG_2 input pin</td><td>PG_2 output pin</td><td>PG_2 input pin</td><td>$\overline{CS2}$ output pin</td></tr>
</table>
Note: * Modes 6 and 7 are provided in the on-chip ROM version only.</td></tr>
<tr><td>$PG_1/\overline{CS3}$</td><td>The pin function is switched as shown below according to the operating mode and bit PG1DDR.
<table>
<tr><td>Operating Mode</td><td colspan="2">Mode 7*</td><td colspan="2">Modes 4 to 6*</td></tr>
<tr><td>PG1DDR</td><td>0</td><td>1</td><td>0</td><td>1</td></tr>
<tr><td>Pin function</td><td>PG_1 input pin</td><td>PG_1 output pin</td><td>PG_1 input pin</td><td>$\overline{CS3}$ output pin</td></tr>
</table>
Note: * Modes 6 and 7 are provided in the on-chip ROM version only.</td></tr>
<tr><td>$PG_0/\overline{CAS}$</td><td>The pin function is switched as shown below according to the combination of the operating mode and bits RMTS2 to RMTS0 and PG0DDR.
<table>
<tr><td>Operating Mode</td><td colspan="2">Mode 7*</td><td colspan="2">Modes 4 to 6*</td><td></td></tr>
<tr><td>RMTS2 to RMTS0</td><td colspan="2">—</td><td colspan="2">B'000,
B'100 to B'111</td><td>B'001 to B'011</td></tr>
<tr><td>PG0DDR</td><td>0</td><td>1</td><td>0</td><td>1</td><td>—</td></tr>
<tr><td>Pin function</td><td>PG_0 input pin</td><td>PG_0 output pin</td><td>PG_0 input pin</td><td>PG_0 output pin</td><td>$\overline{CAS}$ output</td></tr>
</table>
Note: * Modes 6 and 7 are provided in the on-chip ROM version only.</td></tr>
</table>

Section 10 16-Bit Timer Pulse Unit (TPU)

10.1 Overview

The H8S/2357 Group has an on-chip 16-bit timer pulse unit (TPU) that comprises six 16-bit timer channels.

10.1.1 Features

- Maximum 16-pulse input/output
  - A total of 16 timer general registers (TGRs) are provided (four each for channels 0 and 3, and two each for channels 1, 2, 4, and 5), each of which can be set independently as an output compare/input capture register
  - TGRC and TGRD for channels 0 and 3 can also be used as buffer registers
- Selection of 8 counter input clocks for each channel
- The following operations can be set for each channel:
  - Waveform output at compare match: Selection of 0, 1, or toggle output
  - Input capture function: Selection of rising edge, falling edge, or both edge detection
  - Counter clear operation: Counter clearing possible by compare match or input capture
  - Synchronous operation: Multiple timer counters (TCNT) can be written to simultaneously. Simultaneous clearing by compare match and input capture possible. Register simultaneous input/output possible by counter synchronous operation
  - PWM mode: Any PWM output duty can be set. Maximum of 15-phase PWM output possible by combination with synchronous operation
- Buffer operation settable for channels 0 and 3
  - Input capture register double-buffering possible
  - Automatic rewriting of output compare register possible
- Phase counting mode settable independently for each of channels 1, 2, 4, and 5
  - Two-phase encoder pulse up/down-count possible
- Cascaded operation
  - Channel 2 (channel 5) input clock operates as 32-bit counter by setting channel 1 (channel 4) overflow/underflow
- Fast access via internal 16-bit bus
  - Fast access is possible via a 16-bit bus interface
- 26 interrupt sources
  - For channels 0 and 3, four compare match/input capture dual-function interrupts and one overflow interrupt can be requested independently
  - For channels 1, 2, 4, and 5, two compare match/input capture dual-function interrupts, one overflow interrupt, and one underflow interrupt can be requested independently
- Automatic transfer of register data
  - Block transfer, 1-word data transfer, and 1-byte data transfer possible by data transfer controller (DTC) or DMA controller (DMAC) activation
- Programmable pulse generator (PPG) output trigger can be generated
  - Channel 0 to 3 compare match/input capture signals can be used as PPG output trigger

- A/D converter conversion start trigger can be generated
  — Channel 0 to 5 compare match A/input capture A signals can be used as A/D converter conversion start trigger

- Module stop mode can be set
  — As the initial setting, TPU operation is halted. Register access is enabled by exiting module stop mode.

Table 10-1 lists the functions of the TPU.

Table 10-1 TPU Functions

Item		Channel 0	Channel 1	Channel 2	Channel 3	Channel 4	Channel 5
Count clock		ø/1 ø/4 ø/16 ø/64 TCLKA TCLKB TCLKC TCLKD	ø/1 ø/4 ø/16 ø/64 ø/256 TCLKA TCLKB	ø/1 ø/4 ø/16 ø/64 ø/1024 TCLKA TCLKB TCLKC	ø/1 ø/4 ø/16 ø/64 ø/256 ø/1024 ø/4096 TCLKA	ø/1 ø/4 ø/16 ø/64 ø/1024 TCLKA TCLKC	ø/1 ø/4 ø/16 ø/64 ø/256 TCLKA TCLKC TCLKD
General registers		TGR0A TGR0B	TGR1A TGR1B	TGR2A TGR2B	TGR3A TGR3B	TGR4A TGR4B	TGR5A TGR5B
General registers/ buffer registers		TGR0C TGR0D	—	—	TGR3C TGR3D	—	—
I/O pins		TIOCA0 TIOCB0 TIOCC0 TIOCD0	TIOCA1 TIOCB1	TIOCA2 TIOCB2	TIOCA3 TIOCB3 TIOCC3 TIOCD3	TIOCA4 TIOCB4	TIOCA5 TIOCB5
Counter clear function		TGR compare match or input capture	TGR compare match or input capture	TGR compare match or input capture	TGR compare match or input capture	TGR compare match or input capture	TGR compare match or input capture
Compare match output	0 output	○	○	○	○	○	○
	1 output	○	○	○	○	○	○
	Toggle output	○	○	○	○	○	○
Input capture function		○	○	○	○	○	○
Synchronous operation		○	○	○	○	○	○
PWM mode		○	○	○	○	○	○
Phase counting mode		—	○	○	—	○	○
Buffer operation		○	—	—	○	—	—

Item	Channel 0	Channel 1	Channel 2	Channel 3	Channel 4	Channel 5
DMAC activation	TGR0A compare match or input capture	TGR1A compare match or input capture	TGR2A compare match or input capture	TGR3A compare match or input capture	TGR4A compare match or input capture	TGR5A compare match or input capture
DTC activation	TGR compare match or input capture	TGR compare match or input capture	TGR compare match or input capture	TGR compare match or input capture	TGR compare match or input capture	TGR compare match or input capture
A/D converter trigger	TGR0A compare match or input capture	TGR1A compare match or input capture	TGR2A compare match or input capture	TGR3A compare match or input capture	TGR4A compare match or input capture	TGR5A compare match or input capture
PPG trigger	TGR0A/ TGR0B compare match or input capture	TGR1A/ TGR1B compare match or input capture	TGR2A/ TGR2B compare match or input capture	TGR3A/ TGR3B compare match or input capture	—	—
Interrupt sources	5 sources • Compare match or input capture 0A • Compare match or input capture 0B • Compare match or input capture 0C • Compare match or input capture 0D • Overflow	4 sources • Compare match or input capture 1A • Compare match or input capture 1B • Overflow • Underflow	4 sources • Compare match or input capture 2A • Compare match or input capture 2B • Overflow • Underflow	5 sources • Compare match or input capture 3A • Compare match or input capture 3B • Compare match or input capture 3C • Compare match or input capture 3D • Overflow	4 sources • Compare match or input capture 4A • Compare match or input capture 4B • Overflow • Underflow	4 sources • Compare match or input capture 5A • Compare match or input capture 5B • Overflow • Underflow

Legend:
○ : Possible
— : Not possible

10.1.2 Block Diagram

Figure 10-1 shows a block diagram of the TPU.

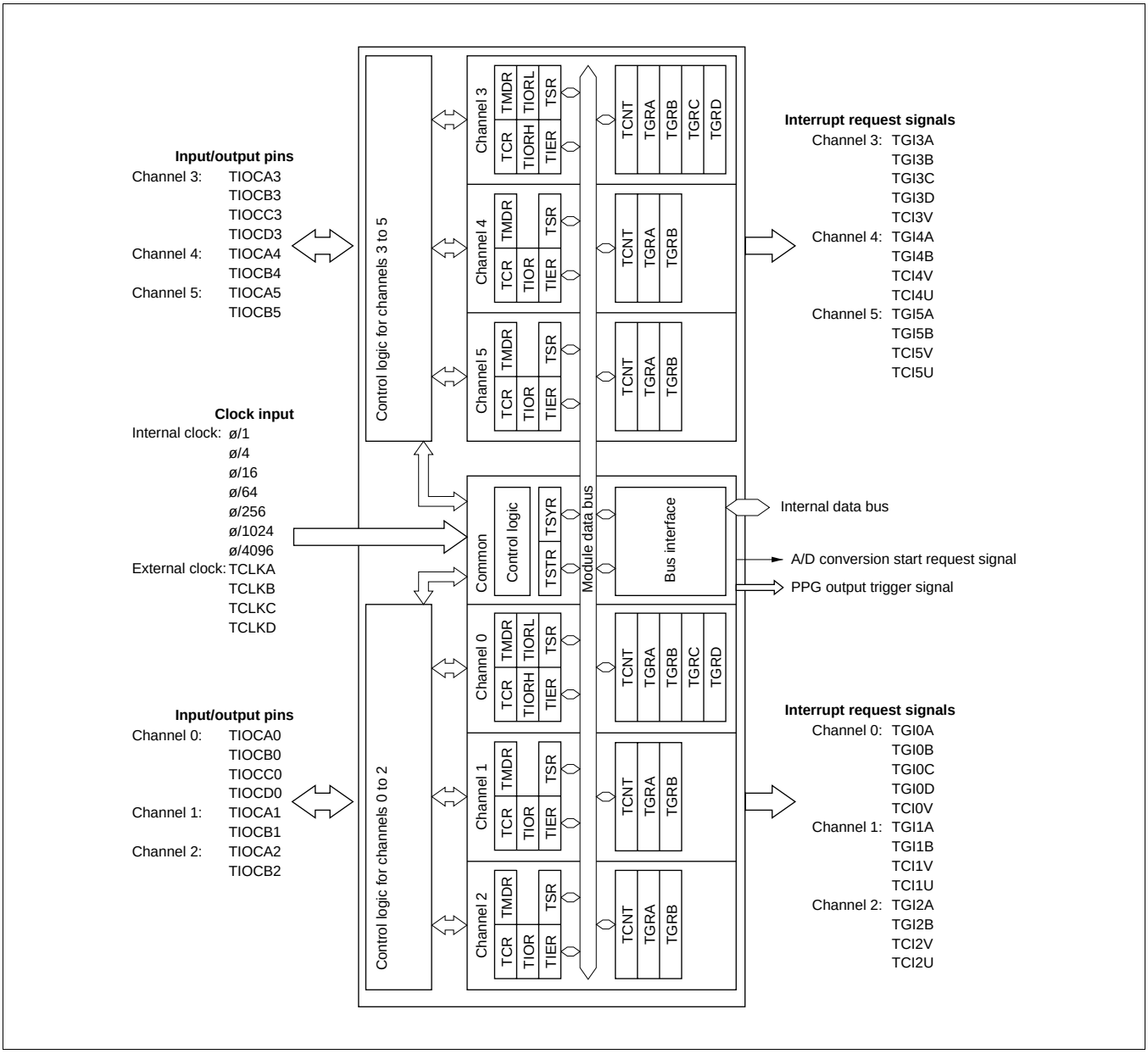

Figure 10-1 Block Diagram of TPU

10.1.3 Pin Configuration

Table 10-2 summarizes the TPU pins.

Table 10-2 TPU Pins

Channel	Name	Symbol	I/O	Function
All	Clock input A	TCLKA	Input	External clock A input pin (Channel 1 and 5 phase counting mode A phase inputs)
	Clock input B	TCLKB	Input	External clock B input pin (Channel 1 and 5 phase counting mode B phase inputs)
	Clock input C	TCLKC	Input	External clock C input pin (Channel 2 and 4 phase counting mode A phase inputs)
	Clock input D	TCLKD	Input	External clock D input pin (Channel 2 and 4 phase counting mode B phase inputs)
0	Input capture/out compare match A0	TIOCA0	I/O	TGR0A input capture input/output compare output/PWM output pin
	Input capture/out compare match B0	TIOCB0	I/O	TGR0B input capture input/output compare output/PWM output pin
	Input capture/out compare match C0	TIOCC0	I/O	TGR0C input capture input/output compare output/PWM output pin
	Input capture/out compare match D0	TIOCD0	I/O	TGR0D input capture input/output compare output/PWM output pin
1	Input capture/out compare match A1	TIOCA1	I/O	TGR1A input capture input/output compare output/PWM output pin
	Input capture/out compare match B1	TIOCB1	I/O	TGR1B input capture input/output compare output/PWM output pin
2	Input capture/out compare match A2	TIOCA2	I/O	TGR2A input capture input/output compare output/PWM output pin
	Input capture/out compare match B2	TIOCB2	I/O	TGR2B input capture input/output compare output/PWM output pin
3	Input capture/out compare match A3	TIOCA3	I/O	TGR3A input capture input/output compare output/PWM output pin
	Input capture/out compare match B3	TIOCB3	I/O	TGR3B input capture input/output compare output/PWM output pin
	Input capture/out compare match C3	TIOCC3	I/O	TGR3C input capture input/output compare output/PWM output pin
	Input capture/out compare match D3	TIOCD3	I/O	TGR3D input capture input/output compare output/PWM output pin
4	Input capture/out compare match A4	TIOCA4	I/O	TGR4A input capture input/output compare output/PWM output pin
	Input capture/out compare match B4	TIOCB4	I/O	TGR4B input capture input/output compare output/PWM output pin
5	Input capture/out compare match A5	TIOCA5	I/O	TGR5A input capture input/output compare output/PWM output pin
	Input capture/out compare match B5	TIOCB5	I/O	TGR5B input capture input/output compare output/PWM output pin

10.1.4 Register Configuration

Table 10-3 summarizes the TPU registers.

Table 10-3 TPU Registers

Channel	Name	Abbreviation	R/W	Initial Value	Address *1
0	Timer control register 0	TCR0	R/W	H'00	H'FFD0
	Timer mode register 0	TMDR0	R/W	H'C0	H'FFD1
	Timer I/O control register 0H	TIOR0H	R/W	H'00	H'FFD2
	Timer I/O control register 0L	TIOR0L	R/W	H'00	H'FFD3
	Timer interrupt enable register 0	TIER0	R/W	H'40	H'FFD4
	Timer status register 0	TSR0	R/(W)*2	H'C0	H'FFD5
	Timer counter 0	TCNT0	R/W	H'0000	H'FFD6
	Timer general register 0A	TGR0A	R/W	H'FFFF	H'FFD8
	Timer general register 0B	TGR0B	R/W	H'FFFF	H'FFDA
	Timer general register 0C	TGR0C	R/W	H'FFFF	H'FFDC
	Timer general register 0D	TGR0D	R/W	H'FFFF	H'FFDE
1	Timer control register 1	TCR1	R/W	H'00	H'FFE0
	Timer mode register 1	TMDR1	R/W	H'C0	H'FFE1
	Timer I/O control register 1	TIOR1	R/W	H'00	H'FFE2
	Timer interrupt enable register 1	TIER1	R/W	H'40	H'FFE4
	Timer status register 1	TSR1	R/(W) *2	H'C0	H'FFE5
	Timer counter 1	TCNT1	R/W	H'0000	H'FFE6
	Timer general register 1A	TGR1A	R/W	H'FFFF	H'FFE8
	Timer general register 1B	TGR1B	R/W	H'FFFF	H'FFEA
2	Timer control register 2	TCR2	R/W	H'00	H'FFF0
	Timer mode register 2	TMDR2	R/W	H'C0	H'FFF1
	Timer I/O control register 2	TIOR2	R/W	H'00	H'FFF2
	Timer interrupt enable register 2	TIER2	R/W	H'40	H'FFF4
	Timer status register 2	TSR2	R/(W) *2	H'C0	H'FFF5
	Timer counter 2	TCNT2	R/W	H'0000	H'FFF6
	Timer general register 2A	TGR2A	R/W	H'FFFF	H'FFF8
	Timer general register 2B	TGR2B	R/W	H'FFFF	H'FFFA

Channel	Name	Abbreviation	R/W	Initial Value	Address*[1]
3	Timer control register 3	TCR3	R/W	H'00	H'FE80
	Timer mode register 3	TMDR3	R/W	H'C0	H'FE81
	Timer I/O control register 3H	TIOR3H	R/W	H'00	H'FE82
	Timer I/O control register 3L	TIOR3L	R/W	H'00	H'FE83
	Timer interrupt enable register 3	TIER3	R/W	H'40	H'FE84
	Timer status register 3	TSR3	R/(W)*[2]	H'C0	H'FE85
	Timer counter 3	TCNT3	R/W	H'0000	H'FE86
	Timer general register 3A	TGR3A	R/W	H'FFFF	H'FE88
	Timer general register 3B	TGR3B	R/W	H'FFFF	H'FE8A
	Timer general register 3C	TGR3C	R/W	H'FFFF	H'FE8C
	Timer general register 3D	TGR3D	R/W	H'FFFF	H'FE8E
4	Timer control register 4	TCR4	R/W	H'00	H'FE90
	Timer mode register 4	TMDR4	R/W	H'C0	H'FE91
	Timer I/O control register 4	TIOR4	R/W	H'00	H'FE92
	Timer interrupt enable register 4	TIER4	R/W	H'40	H'FE94
	Timer status register 4	TSR4	R/(W) *[2]	H'C0	H'FE95
	Timer counter 4	TCNT4	R/W	H'0000	H'FE96
	Timer general register 4A	TGR4A	R/W	H'FFFF	H'FE98
	Timer general register 4B	TGR4B	R/W	H'FFFF	H'FE9A
5	Timer control register 5	TCR5	R/W	H'00	H'FEA0
	Timer mode register 5	TMDR5	R/W	H'C0	H'FEA1
	Timer I/O control register 5	TIOR5	R/W	H'00	H'FEA2
	Timer interrupt enable register 5	TIER5	R/W	H'40	H'FEA4
	Timer status register 5	TSR5	R/(W) *[2]	H'C0	H'FEA5
	Timer counter 5	TCNT5	R/W	H'0000	H'FEA6
	Timer general register 5A	TGR5A	R/W	H'FFFF	H'FEA8
	Timer general register 5B	TGR5B	R/W	H'FFFF	H'FEAA
All	Timer start register	TSTR	R/W	H'00	H'FFC0
	Timer synchro register	TSYR	R/W	H'00	H'FFC1
	Module stop control register	MSTPCR	R/W	H'3FFF	H'FF3C

Notes: 1. Lower 16 bits of the address.
2. Can only be written with 0 for flag clearing.

10.2 Register Descriptions

10.2.1 Timer Control Register (TCR)

Channel 0: TCR0

Channel 3: TCR3

Bit	:	7	6	5	4	3	2	1	0
		CCLR2	CCLR1	CCLR0	CKEG1	CKEG0	TPSC2	TPSC1	TPSC0
Initial value	:	0	0	0	0	0	0	0	0
R/W	:	R/W	R/W	R/W	R/W	R/W	R/W	R/W	R/W

Channel 1: TCR1

Channel 2: TCR2

Channel 4: TCR4

Channel 5: TCR5

Bit	:	7	6	5	4	3	2	1	0
		—	CCLR1	CCLR0	CKEG1	CKEG0	TPSC2	TPSC1	TPSC0
Initial value	:	0	0	0	0	0	0	0	0
R/W	:	—	R/W	R/W	R/W	R/W	R/W	R/W	R/W

The TCR registers are 8-bit registers that control the TCNT channels. The TPU has six TCR registers, one for each of channels 0 to 5. The TCR registers are initialized to H'00 by a reset, and in hardware standby mode.

TCR register settings should be made only when TCNT operation is stopped.

Bits 7 to 5—Counter Clear 2, 1, and 0 (CCLR2, CCLR1, CCLR0): These bits select the TCNT counter clearing source.

Channel	Bit 7 CCLR2	Bit 6 CCLR1	Bit 5 CCLR0	Description
0, 3	0	0	0	TCNT clearing disabled (Initial value)
			1	TCNT cleared by TGRA compare match/input capture
		1	0	TCNT cleared by TGRB compare match/input capture
			1	TCNT cleared by counter clearing for another channel performing synchronous clearing/ synchronous operation *1
	1	0	0	TCNT clearing disabled
			1	TCNT cleared by TGRC compare match/input capture *2
		1	0	TCNT cleared by TGRD compare match/input capture *2
			1	TCNT cleared by counter clearing for another channel performing synchronous clearing/ synchronous operation *1

Channel	Bit 7 Reserved*3	Bit 6 CCLR1	Bit 5 CCLR0	Description
1, 2, 4, 5	0	0	0	TCNT clearing disabled (Initial value)
			1	TCNT cleared by TGRA compare match/input capture
		1	0	TCNT cleared by TGRB compare match/input capture
			1	TCNT cleared by counter clearing for another channel performing synchronous clearing/ synchronous operation *1

Notes: 1. Synchronous operation setting is performed by setting the SYNC bit in TSYR to 1.
2. When TGRC or TGRD is used as a buffer register, TCNT is not cleared because the buffer register setting has priority, and compare match/input capture does not occur.
3. Bit 7 is reserved in channels 1, 2, 4, and 5. It is always read as 0 and cannot be modified.

Bits 4 and 3—Clock Edge 1 and 0 (CKEG1, CKEG0): These bits select the input clock edge. When the input clock is counted using both edges, the input clock period is halved (e.g. ø/4 both edges = ø/2 rising edge). If phase counting mode is used on channels 1, 2, 4, and 5, this setting is ignored and the phase counting mode setting has priority.

Bit 4 CKEG1	Bit 3 CKEG0	Description	
0	0	Count at rising edge	(Initial value)
	1	Count at falling edge	
1	—	Count at both edges	

Note: Internal clock edge selection is valid when the input clock is ø/4 or slower. This setting is ignored if the input clock is ø/1, or when overflow/underflow of another channel is selected.

Bits 2 to 0—Time Prescaler 2 to 0 (TPSC2 to TPSC0): These bits select the TCNT counter clock. The clock source can be selected independently for each channel. Table 10-4 shows the clock sources that can be set for each channel.

Table 10-4 TPU Clock Sources

	Internal Clock							External Clock				Overflow/ Underflow on Another
Channel	ø/1	ø/4	ø/16	ø/64	ø/256	ø/1024	ø/4096	TCLKA	TCLKB	TCLKC	TCLKD	Channel
0	○	○	○	○				○	○	○	○	
1	○	○	○	○	○			○	○			○
2	○	○	○	○		○		○	○	○		
3	○	○	○	○	○	○	○	○				
4	○	○	○	○		○		○		○		○
5	○	○	○	○	○			○		○	○	

Legend:

○: Setting

Blank: No setting

Channel	Bit 2 TPSC2	Bit 1 TPSC1	Bit 0 TPSC0	Description	
0	0	0	0	Internal clock: counts on ø/1	(Initial value)
			1	Internal clock: counts on ø/4	
		1	0	Internal clock: counts on ø/16	
			1	Internal clock: counts on ø/64	
	1	0	0	External clock: counts on TCLKA pin input	
			1	External clock: counts on TCLKB pin input	
		1	0	External clock: counts on TCLKC pin input	
			1	External clock: counts on TCLKD pin input	

Channel	Bit 2 TPSC2	Bit 1 TPSC1	Bit 0 TPSC0	Description	
1	0	0	0	Internal clock: counts on ø/1	(Initial value)
			1	Internal clock: counts on ø/4	
		1	0	Internal clock: counts on ø/16	
			1	Internal clock: counts on ø/64	
	1	0	0	External clock: counts on TCLKA pin input	
			1	External clock: counts on TCLKB pin input	
		1	0	Internal clock: counts on ø/256	
			1	Counts on TCNT2 overflow/underflow	

Note: This setting is ignored when channel 1 is in phase counting mode.

Channel	Bit 2 TPSC2	Bit 1 TPSC1	Bit 0 TPSC0	Description	
2	0	0	0	Internal clock: counts on ø/1	(Initial value)
			1	Internal clock: counts on ø/4	
		1	0	Internal clock: counts on ø/16	
			1	Internal clock: counts on ø/64	
	1	0	0	External clock: counts on TCLKA pin input	
			1	External clock: counts on TCLKB pin input	
		1	0	External clock: counts on TCLKC pin input	
			1	Internal clock: counts on ø/1024	

Note: This setting is ignored when channel 2 is in phase counting mode.

Channel	Bit 2 TPSC2	Bit 1 TPSC1	Bit 0 TPSC0	Description	
3	0	0	0	Internal clock: counts on ø/1	(Initial value)
			1	Internal clock: counts on ø/4	
		1	0	Internal clock: counts on ø/16	
			1	Internal clock: counts on ø/64	
	1	0	0	External clock: counts on TCLKA pin input	
			1	Internal clock: counts on ø/1024	
		1	0	Internal clock: counts on ø/256	
			1	Internal clock: counts on ø/4096	

Channel	Bit 2 TPSC2	Bit 1 TPSC1	Bit 0 TPSC0	Description	
4	0	0	0	Internal clock: counts on ø/1	(Initial value)
			1	Internal clock: counts on ø/4	
		1	0	Internal clock: counts on ø/16	
			1	Internal clock: counts on ø/64	
	1	0	0	External clock: counts on TCLKA pin input	
			1	External clock: counts on TCLKC pin input	
		1	0	Internal clock: counts on ø/1024	
			1	Counts on TCNT5 overflow/underflow	

Note: This setting is ignored when channel 4 is in phase counting mode.

Channel	Bit 2 TPSC2	Bit 1 TPSC1	Bit 0 TPSC0	Description	
5	0	0	0	Internal clock: counts on ø/1	(Initial value)
			1	Internal clock: counts on ø/4	
		1	0	Internal clock: counts on ø/16	
			1	Internal clock: counts on ø/64	
	1	0	0	External clock: counts on TCLKA pin input	
			1	External clock: counts on TCLKC pin input	
		1	0	Internal clock: counts on ø/256	
			1	External clock: counts on TCLKD pin input	

Note: This setting is ignored when channel 5 is in phase counting mode.

10.2.2 Timer Mode Register (TMDR)

Channel 0: TMDR0

Channel 3: TMDR3

Bit :	7	6	5	4	3	2	1	0
	—	—	BFB	BFA	MD3	MD2	MD1	MD0
Initial value :	1	1	0	0	0	0	0	0
R/W :	—	—	R/W	R/W	R/W	R/W	R/W	R/W

Channel 1: TMDR1

Channel 2: TMDR2

Channel 4: TMDR4

Channel 5: TMDR5

Bit :	7	6	5	4	3	2	1	0
	—	—	—	—	MD3	MD2	MD1	MD0
Initial value :	1	1	0	0	0	0	0	0
R/W :	—	—	—	—	R/W	R/W	R/W	R/W

The TMDR registers are 8-bit readable/writable registers that are used to set the operating mode for each channel. The TPU has six TMDR registers, one for each channel. The TMDR registers are initialized to H'C0 by a reset, and in hardware standby mode.

TMDR register settings should be made only when TCNT operation is stopped.

Bits 7 and 6—Reserved: These bits cannot be modified and are always read as 1.

Bit 5—Buffer Operation B (BFB): Specifies whether TGRB is to operate in the normal way, or TGRB and TGRD are to be used together for buffer operation. When TGRD is used as a buffer register, TGRD input capture/output compare is not generated.

In channels 1, 2, 4, and 5, which have no TGRD, bit 5 is reserved. It is always read as 0 and cannot be modified.

Bit 5 BFB	Description	
0	TGRB operates normally	(Initial value)
1	TGRB and TGRD used together for buffer operation	

Bit 4—Buffer Operation A (BFA): Specifies whether TGRA is to operate in the normal way, or TGRA and TGRC are to be used together for buffer operation. When TGRC is used as a buffer register, TGRC input capture/output compare is not generated.

In channels 1, 2, 4, and 5, which have no TGRC, bit 4 is reserved. It is always read as 0 and cannot be modified.

Bit 4 BFA	Description	
0	TGRA operates normally	(Initial value)
1	TGRA and TGRC used together for buffer operation	

Bits 3 to 0—Modes 3 to 0 (MD3 to MD0): These bits are used to set the timer operating mode.

Bit 3 MD3*[1]	Bit 2 MD2*[2]	Bit 1 MD1	Bit 0 MD0	Description	
0	0	0	0	Normal operation	(Initial value)
			1	Reserved	
		1	0	PWM mode 1	
			1	PWM mode 2	
	1	0	0	Phase counting mode 1	
			1	Phase counting mode 2	
		1	0	Phase counting mode 3	
			1	Phase counting mode 4	
1	×	×	×	—	

×: Don’t care

Notes: 1. MD3 is a reserved bit. In a write, it should always be written with 0.
2. Phase counting mode cannot be set for channels 0 and 3. In this case, 0 should always be written to MD2.

10.2.3 Timer I/O Control Register (TIOR)

Channel 0: TIOR0H

Channel 1: TIOR1

Channel 2: TIOR2

Channel 3: TIOR3H

Channel 4: TIOR4

Channel 5: TIOR5

Bit :	7	6	5	4	3	2	1	0
	IOB3	IOB2	IOB1	IOB0	IOA3	IOA2	IOA1	IOA0
Initial value :	0	0	0	0	0	0	0	0
R/W :	R/W	R/W	R/W	R/W	R/W	R/W	R/W	R/W

Channel 0: TIOR0L

Channel 3: TIOR3L

Bit :	7	6	5	4	3	2	1	0
	IOD3	IOD2	IOD1	IOD0	IOC3	IOC2	IOC1	IOC0
Initial value :	0	0	0	0	0	0	0	0
R/W :	R/W	R/W	R/W	R/W	R/W	R/W	R/W	R/W

Note: When TGRC or TGRD is designated for buffer operation, this setting is invalid and the register operates as a buffer register.

The TIOR registers are 8-bit registers that control the TGR registers. The TPU has eight TIOR registers, two each for channels 0 and 3, and one each for channels 1, 2, 4, and 5. The TIOR registers are initialized to H'00 by a reset, and in hardware standby mode.

Care is required since TIOR is affected by the TMDR setting. The initial output specified by TIOR is valid when the counter is stopped (the CST bit in TSTR is cleared to 0). Note also that, in PWM mode 2, the output at the point at which the counter is cleared to 0 is specified.

Bits 7 to 4— I/O Control B3 to B0 (IOB3 to IOB0)
I/O Control D3 to D0 (IOD3 to IOD0):

Bits IOB3 to IOB0 specify the function of TGRB.
Bits IOD3 to IOD0 specify the function of TGRD.

Channel	Bit 7 IOB3	Bit 6 IOB2	Bit 5 IOB1	Bit 4 IOB0	Description		
0	0	0	0	0	TGR0B is output compare register	Output disabled	(Initial value)
				1		Initial output is 0 output	0 output at compare match
			1	0			1 output at compare match
				1			Toggle output at compare match
		1	0	0		Output disabled	
				1		Initial output is 1 output	0 output at compare match
			1	0			1 output at compare match
				1			Toggle output at compare match
	1	0	0	0	TGR0B is input capture register	Capture input source is TIOCB0 pin	Input capture at rising edge
				1			Input capture at falling edge
			1	×			Input capture at both edges
		1	×	×		Capture input source is channel 1/count clock	Input capture at TCNT1 count- up/count-down*

×: Don't care

Note: * When bits TPSC2 to TPSC0 in TCR1 are set to B'000 and ø/1 is used as the TCNT1 count clock, this setting is invalid and input capture is not generated.

Channel	Bit 7 IOD3	Bit 6 IOD2	Bit 5 IOD1	Bit 4 IOD0	Description		
0	0	0	0	0	TGR0D is output compare register*2	Output disabled	(Initial value)
				1		Initial output is 0 output	0 output at compare match
			1	0			1 output at compare match
				1			Toggle output at compare match
		1	0	0		Output disabled	
				1		Initial output is 1 output	0 output at compare match
			1	0			1 output at compare match
				1			Toggle output at compare match
	1	0	0	0	TGR0D is input capture register*2	Capture input source is TIOCD0 pin	Input capture at rising edge
				1			Input capture at falling edge
			1	×			Input capture at both edges
		1	×	×		Capture input source is channel 1/count clock	Input capture at TCNT1 count-up/count-down*1

×: Don’t care

Notes: 1. When bits TPSC2 to TPSC0 in TCR1 are set to B'000 and ø/1 is used as the TCNT1 count clock, this setting is invalid and input capture is not generated.

2. When the BFB bit in TMDR0 is set to 1 and TGR0D is used as a buffer register, this setting is invalid and input capture/output compare is not generated.

Channel	Bit 7 IOB3	Bit 6 IOB2	Bit 5 IOB1	Bit 4 IOB0	Description		
1	0	0	0	0	TGR1B is output compare register	Output disabled	(Initial value)
				1		Initial output is 0 output	0 output at compare match
			1	0			1 output at compare match
				1			Toggle output at compare match
		1	0	0		Output disabled	
				1		Initial output is 1 output	0 output at compare match
			1	0			1 output at compare match
				1			Toggle output at compare match
	1	0	0	0	TGR1B is input capture register	Capture input source is TIOCB1 pin	Input capture at rising edge
				1			Input capture at falling edge
			1	×			Input capture at both edges
		1	×	×		Capture input source is TGR0C compare match/ input capture	Input capture at generation of TGR0C compare match/input capture

×: Don’t care

Channel	Bit 7 IOB3	Bit 6 IOB2	Bit 5 IOB1	Bit 4 IOB0	Description		
2	0	0	0	0	TGR2B is output compare register	Output disabled	(Initial value)
				1		Initial output is 0 output	0 output at compare match
			1	0			1 output at compare match
				1			Toggle output at compare match
		1	0	0		Output disabled	
				1		Initial output is 1 output	0 output at compare match
			1	0			1 output at compare match
				1			Toggle output at compare match
	1	×	0	0	TGR2B is input capture register	Capture input source is TIOCB2 pin	Input capture at rising edge
				1			Input capture at falling edge
			1	×			Input capture at both edges

×: Don't care

Channel	Bit 7 IOB3	Bit 6 IOB2	Bit 5 IOB1	Bit 4 IOB0	Description		
3	0	0	0	0	TGR3B is output compare register	Output disabled	(Initial value)
				1		Initial output is 0 output	0 output at compare match
			1	0			1 output at compare match
				1			Toggle output at compare match
		1	0	0		Output disabled	
				1		Initial output is 1 output	0 output at compare match
			1	0			1 output at compare match
				1			Toggle output at compare match
	1	0	0	0	TGR3B is input capture register	Capture input source is TIOCB3 pin	Input capture at rising edge
				1			Input capture at falling edge
			1	×			Input capture at both edges
		1	×	×		Capture input source is channel 4/count clock	Input capture at TCNT4 count-up/count-down*

×: Don't care

Note: * When bits TPSC2 to TPSC0 in TCR4 are set to B'000 and ø/1 is used as the TCNT4 count clock, this setting is invalid and input capture is not generated.

Channel	Bit 7 IOD3	Bit 6 IOD2	Bit 5 IOD1	Bit 4 IOD0	Description		
3	0	0	0	0	TGR3D is output compare register*2	Output disabled	(Initial value)
				1		Initial output is 0 output	0 output at compare match
			1	0			1 output at compare match
				1			Toggle output at compare match
		1	0	0		Output disabled	
				1		Initial output is 1 output	0 output at compare match
			1	0			1 output at compare match
				1			Toggle output at compare match
	1	0	0	0	TGR3D is input capture register*2	Capture input source is TIOCD3 pin	Input capture at rising edge
				1			Input capture at falling edge
			1	×			Input capture at both edges
		1	×	×		Capture input source is channel 4/count clock	Input capture at TCNT4 count-up/count-down*1

×: Don't care

Notes: 1. When bits TPSC2 to TPSC0 in TCR4 are set to B'000 and ø/1 is used as the TCNT4 count clock, this setting is invalid and input capture is not generated.

2. When the BFB bit in TMDR3 is set to 1 and TGR3D is used as a buffer register, this setting is invalid and input capture/output compare is not generated.

Channel	Bit 7 IOB3	Bit 6 IOB2	Bit 5 IOB1	Bit 4 IOB0	Description		
4	0	0	0	0	TGR4B is output compare register	Output disabled	(Initial value)
				1		Initial output is 0 output	0 output at compare match
			1	0			1 output at compare match
				1			Toggle output at compare match
		1	0	0		Output disabled	
				1		Initial output is 1 output	0 output at compare match
			1	0			1 output at compare match
				1			Toggle output at compare match
	1	0	0	0	TGR4B is input capture register	Capture input source is TIOCB4 pin	Input capture at rising edge
				1			Input capture at falling edge
			1	×			Input capture at both edges
		1	×	×		Capture input source is TGR3C compare match/ input capture	Input capture at generation of TGR3C compare match/ input capture

×: Don't care

Channel	Bit 7 IOB3	Bit 6 IOB2	Bit 5 IOB1	Bit 4 IOB0	Description		
5	0	0	0	0	TGR5B is output compare register	Output disabled	(Initial value)
				1		Initial output is 0 output	0 output at compare match
			1	0			1 output at compare match
				1			Toggle output at compare match
		1	0	0		Output disabled	
				1		Initial output is 1 output	0 output at compare match
			1	0			1 output at compare match
				1			Toggle output at compare match
	1	×	0	0	TGR5B is input capture register	Capture input source is TIOCB5 pin	Input capture at rising edge
				1			Input capture at falling edge
			1	×			Input capture at both edges

×: Don't care

Bits 3 to 0— I/O Control A3 to A0 (IOA3 to IOA0)
I/O Control C3 to C0 (IOC3 to IOC0):

IOA3 to IOA0 specify the function of TGRA.
IOC3 to IOC0 specify the function of TGRC.

Channel	Bit 3 IOA3	Bit 2 IOA2	Bit 1 IOA1	Bit 0 IOA0	Description		
0	0	0	0	0	TGR0A is output compare register	Output disabled	(Initial value)
				1		Initial output is 0 output	0 output at compare match
			1	0			1 output at compare match
				1			Toggle output at compare match
		1	0	0		Output disabled	
				1		Initial output is 1 output	0 output at compare match
			1	0			1 output at compare match
				1			Toggle output at compare match
	1	0	0	0	TGR0A is input capture register	Capture input source is TIOCA0 pin	Input capture at rising edge
				1			Input capture at falling edge
			1	×			Input capture at both edges
		1	×	×		Capture input source is channel 1/ count clock	Input capture at TCNT1 count-up/count-down

×: Don't care

Channel	Bit 3 IOC3	Bit 2 IOC2	Bit 1 IOC1	Bit 0 IOC0	Description		
0	0	0	0	0	TGR0C is output compare register*[1]	Output disabled	(Initial value)
				1		Initial output is 0 output	0 output at compare match
			1	0			1 output at compare match
				1			Toggle output at compare match
		1	0	0		Output disabled	
				1		Initial output is 1 output	0 output at compare match
			1	0			1 output at compare match
				1			Toggle output at compare match
	1	0	0	0	TGR0C is input capture register*	Capture input source is TIOCC0 pin	Input capture at rising edge
				1			Input capture at falling edge
			1	×			Input capture at both edges
		1	×	×		Capture input source is channel 1/count clock	Input capture at TCNT1 count-up/count-down

×: Don't care

Note: * When the BFA bit in TMDR0 is set to 1 and TGR0C is used as a buffer register, this setting is invalid and input capture/output compare is not generated.

Channel	Bit 3 IOA3	Bit 2 IOA2	Bit 1 IOA1	Bit 0 IOA0	Description		
1	0	0	0	0	TGR1A is output compare register	Output disabled	(Initial value)
				1		Initial output is 0 output	0 output at compare match
			1	0			1 output at compare match
				1			Toggle output at compare match
		1	0	0		Output disabled	
				1		Initial output is 1 output	0 output at compare match
			1	0			1 output at compare match
				1			Toggle output at compare match
	1	0	0	0	TGR1A is input capture register	Capture input source is TIOCA1 pin	Input capture at rising edge
				1			Input capture at falling edge
			1	×			Input capture at both edges
		1	×	×		Capture input source is TGR0A compare match/ input capture	Input capture at generation of channel 0/TGR0A compare match/input capture

×: Don’t care

Channel	Bit 3 IOA3	Bit 2 IOA2	Bit 1 IOA1	Bit 0 IOA0	Description		
2	0	0	0	0	TGR2A is output compare register	Output disabled	(Initial value)
				1		Initial output is 0 output	0 output at compare match
			1	0			1 output at compare match
				1			Toggle output at compare match
		1	0	0		Output disabled	
				1		Initial output is 1 output	0 output at compare match
			1	0			1 output at compare match
				1			Toggle output at compare match
	1	×	0	0	TGR2A is input capture register	Capture input source is TIOCA2 pin	Input capture at rising edge
				1			Input capture at falling edge
			1	×			Input capture at both edges

×: Don’t care

Channel	Bit 3 IOA3	Bit 2 IOA2	Bit 1 IOA1	Bit 0 IOA0	Description		
3	0	0	0	0	TGR3A is output compare register	Output disabled	(Initial value)
				1		Initial output is 0 output	0 output at compare match
			1	0			1 output at compare match
				1			Toggle output at compare match
		1	0	0		Output disabled	
				1		Initial output is 1 output	0 output at compare match
			1	0			1 output at compare match
				1			Toggle output at compare match
	1	0	0	0	TGR3A is input capture register	Capture input source is TIOCA3 pin	Input capture at rising edge
				1			Input capture at falling edge
			1	×			Input capture at both edges
		1	×	×		Capture input source is channel 4/count clock	Input capture at TCNT4 count-up/count-down

×: Don't care

Channel	Bit 3 IOC3	Bit 2 IOC2	Bit 1 IOC1	Bit 0 IOC0	Description		
3	0	0	0	0	TGR3C is output compare register*[1]	Output disabled	(Initial value)
				1		Initial output is 0 output	0 output at compare match
			1	0			1 output at compare match
				1			Toggle output at compare match
		1	0	0		Output disabled	
				1		Initial output is 1 output	0 output at compare match
			1	0			1 output at compare match
				1			Toggle output at compare match
	1	0	0	0	TGR3C is input capture register*	Capture input source is TIOCC3 pin	Input capture at rising edge
				1			Input capture at falling edge
			1	×			Input capture at both edges
		1	×	×		Capture input source is channel 4/count clock	Input capture at TCNT4 count-up/count-down

×: Don't care

Note: * When the BFA bit in TMDR3 is set to 1 and TGR3C is used as a buffer register, this setting is invalid and input capture/output compare is not generated.

Channel	Bit 3 IOA3	Bit 2 IOA2	Bit 1 IOA1	Bit 0 IOA0	Description		
4	0	0	0	0	TGR4A is output compare register	Output disabled	(Initial value)
				1		Initial output is 0 output	0 output at compare match
			1	0			1 output at compare match
				1			Toggle output at compare match
		1	0	0		Output disabled	
				1		Initial output is 1 output	0 output at compare match
			1	0			1 output at compare match
				1			Toggle output at compare match
	1	0	0	0	TGR4A is input capture register	Capture input source is TIOCA4 pin	Input capture at rising edge
				1			Input capture at falling edge
			1	×			Input capture at both edges
		1	×	×		Capture input source is TGR3A compare match/ input capture	Input capture at generation of TGR3A compare match/input capture

×: Don't care

Channel	Bit 3 IOA3	Bit 2 IOA2	Bit 1 IOA1	Bit 0 IOA0	Description		
5	0	0	0	0	TGR5A is output compare register	Output disabled	(Initial value)
				1		Initial output is 0 output	0 output at compare match
			1	0			1 output at compare match
				1			Toggle output at compare match
		1	0	0		Output disabled	
				1		Initial output is 1 output	0 output at compare match
			1	0			1 output at compare match
				1			Toggle output at compare match
	1	×	0	0	TGR5A is input capture register	Capture input source is TIOCA5 pin	Input capture at rising edge
				1			Input capture at falling edge
			1	×			Input capture at both edges

×: Don't care

10.2.4 Timer Interrupt Enable Register (TIER)

Channel 0: TIER0

Channel 3: TIER3

Bit	:	7	6	5	4	3	2	1	0
		TTGE	—	—	TCIEV	TGIED	TGIEC	TGIEB	TGIEA
Initial value	:	0	1	0	0	0	0	0	0
R/W	:	R/W	—	—	R/W	R/W	R/W	R/W	R/W

Channel 1: TIER1

Channel 2: TIER2

Channel 4: TIER4

Channel 5: TIER5

Bit	:	7	6	5	4	3	2	1	0
		TTGE	—	TCIEU	TCIEV	—	—	TGIEB	TGIEA
Initial value	:	0	1	0	0	0	0	0	0
R/W	:	R/W	—	R/W	R/W	—	—	R/W	R/W

The TIER registers are 8-bit registers that control enabling or disabling of interrupt requests for each channel. The TPU has six TIER registers, one for each channel. The TIER registers are initialized to H'40 by a reset, and in hardware standby mode.

Bit 7—A/D Conversion Start Request Enable (TTGE): Enables or disables generation of A/D conversion start requests by TGRA input capture/compare match.

Bit 7 TTGE	Description	
0	A/D conversion start request generation disabled	(Initial value)
1	A/D conversion start request generation enabled	

Bit 6—Reserved: This bit cannot be modified and is always read as 1.

Bit 5—Underflow Interrupt Enable (TCIEU): Enables or disables interrupt requests (TCIU) by the TCFU flag when the TCFU flag in TSR is set to 1 in channels 1 and 2.

In channels 0 and 3, bit 5 is reserved. It is always read as 0 and cannot be modified.

Bit 5 TCIEU	Description	
0	Interrupt requests (TCIU) by TCFU disabled	(Initial value)
1	Interrupt requests (TCIU) by TCFU enabled	

Bit 4—Overflow Interrupt Enable (TCIEV): Enables or disables interrupt requests (TCIV) by the TCFV flag when the TCFV flag in TSR is set to 1.

Bit 4 TCIEV	Description	
0	Interrupt requests (TCIV) by TCFV disabled	(Initial value)
1	Interrupt requests (TCIV) by TCFV enabled	

Bit 3—TGR Interrupt Enable D (TGIED): Enables or disables interrupt requests (TGID) by the TGFD bit when the TGFD bit in TSR is set to 1 in channels 0 and 3.

In channels 1, 2, 4, and 5, bit 3 is reserved. It is always read as 0 and cannot be modified.

Bit 3 TGIED	Description	
0	Interrupt requests (TGID) by TGFD bit disabled	(Initial value)
1	Interrupt requests (TGID) by TGFD bit enabled	

Bit 2—TGR Interrupt Enable C (TGIEC): Enables or disables interrupt requests (TGIC) by the TGFC bit when the TGFC bit in TSR is set to 1 in channels 0 and 3.

In channels 1, 2, 4, and 5, bit 2 is reserved. It is always read as 0 and cannot be modified.

Bit 2 TGIEC	Description	
0	Interrupt requests (TGIC) by TGFC bit disabled	(Initial value)
1	Interrupt requests (TGIC) by TGFC bit enabled	

Bit 1—TGR Interrupt Enable B (TGIEB): Enables or disables interrupt requests (TGIB) by the TGFB bit when the TGFB bit in TSR is set to 1.

Bit 1 TGIEB	Description	
0	Interrupt requests (TGIB) by TGFB bit disabled	(Initial value)
1	Interrupt requests (TGIB) by TGFB bit enabled	

Bit 0—TGR Interrupt Enable A (TGIEA): Enables or disables interrupt requests (TGIA) by the TGFA bit when the TGFA bit in TSR is set to 1.

Bit 0 TGIEA	Description	
0	Interrupt requests (TGIA) by TGFA bit disabled	(Initial value)
1	Interrupt requests (TGIA) by TGFA bit enabled	

10.2.5 Timer Status Register (TSR)

Channel 0: TSR0

Channel 3: TSR3

Bit	:	7	6	5	4	3	2	1	0
		—	—	—	TCFV	TGFD	TGFC	TGFB	TGFA
Initial value	:	1	1	0	0	0	0	0	0
R/W	:	—	—	—	R/(W)*	R/(W)*	R/(W)*	R/(W)*	R/(W)*

Note: * Can only be written with 0 for flag clearing.

Channel 1: TSR1

Channel 2: TSR2

Channel 4: TSR4

Channel 5: TSR5

Bit	:	7	6	5	4	3	2	1	0
		TCFD	—	TCFU	TCFV	—	—	TGFB	TGFA
Initial value	:	1	1	0	0	0	0	0	0
R/W	:	R	—	R/(W)*	R/(W)*	—	—	R/(W)*	R/(W)*

Note: * Can only be written with 0 for flag clearing.

The TSR registers are 8-bit registers that indicate the status of each channel. The TPU has six TSR registers, one for each channel. The TSR registers are initialized to H'C0 by a reset, and in hardware standby mode.

Bit 7—Count Direction Flag (TCFD): Status flag that shows the direction in which TCNT counts in channels 1, 2, 4, and 5.

In channels 0 and 3, bit 7 is reserved. It is always read as 1 and cannot be modified.

Bit 7 TCFD	Description	
0	TCNT counts down	
1	TCNT counts up	(Initial value)

Bit 6—Reserved: This bit cannot be modified and is always read as 1.

Bit 5—Underflow Flag (TCFU): Status flag that indicates that TCNT underflow has occurred when channels 1, 2, 4, and 5 are set to phase counting mode.

In channels 0 and 3, bit 5 is reserved. It is always read as 0 and cannot be modified.

Bit 5 TCFU	Description	
0	[Clearing condition] When 0 is written to TCFU after reading TCFU = 1	(Initial value)
1	[Setting condition] When the TCNT value underflows (changes from H'0000 to H'FFFF)	

Bit 4—Overflow Flag (TCFV): Status flag that indicates that TCNT overflow has occurred.

Bit 4 TCFV	Description
0	[Clearing condition] (Initial value) When 0 is written to TCFV after reading TCFV = 1
1	[Setting condition] When the TCNT value overflows (changes from H'FFFF to H'0000)

Bit 3—Input Capture/Output Compare Flag D (TGFD): Status flag that indicates the occurrence of TGRD input capture or compare match in channels 0 and 3.

In channels 1, 2, 4, and 5, bit 3 is reserved. It is always read as 0 and cannot be modified.

Bit 3 TGFD	Description
0	[Clearing conditions] (Initial value) • When DTC is activated by TGID interrupt while DISEL bit of MRB in DTC is 0 • When 0 is written to TGFD after reading TGFD = 1
1	[Setting conditions] • When TCNT = TGRD while TGRD is functioning as output compare register • When TCNT value is transferred to TGRD by input capture signal while TGRD is functioning as input capture register

Bit 2—Input Capture/Output Compare Flag C (TGFC): Status flag that indicates the occurrence of TGRC input capture or compare match in channels 0 and 3.

In channels 1, 2, 4, and 5, bit 2 is reserved. It is always read as 0 and cannot be modified.

Bit 2 TGFC	Description
0	[Clearing conditions] (Initial value) • When DTC is activated by TGIC interrupt while DISEL bit of MRB in DTC is 0 • When 0 is written to TGFC after reading TGFC = 1
1	[Setting conditions] • When TCNT = TGRC while TGRC is functioning as output compare register • When TCNT value is transferred to TGRC by input capture signal while TGRC is functioning as input capture register

Bit 1—Input Capture/Output Compare Flag B (TGFB): Status flag that indicates the occurrence of TGRB input capture or compare match.

Bit 1 TGFB	Description
0	[Clearing conditions] (Initial value) • When DTC is activated by TGIB interrupt while DISEL bit of MRB in DTC is 0 • When 0 is written to TGFB after reading TGFB = 1
1	[Setting conditions] • When TCNT = TGRB while TGRB is functioning as output compare register • When TCNT value is transferred to TGRB by input capture signal while TGRB is functioning as input capture register

Bit 0—Input Capture/Output Compare Flag A (TGFA): Status flag that indicates the occurrence of TGRA input capture or compare match.

Bit 0 TGFA	Description
0	[Clearing conditions] (Initial value) • When DTC is activated by TGIA interrupt while DISEL bit of MRB in DTC is 0 • When DMAC is activated by TGIA interrupt while DTA bit of DMABCR in DMAC is 1 • When 0 is written to TGFA after reading TGFA = 1
1	[Setting conditions] • When TCNT = TGRA while TGRA is functioning as output compare register • When TCNT value is transferred to TGRA by input capture signal while TGRA is functioning as input capture register

10.2.6 Timer Counter (TCNT)

Channel 0: TCNT0 (up-counter)

Channel 1: TCNT1 (up/down-counter*)

Channel 2: TCNT2 (up/down-counter*)

Channel 3: TCNT3 (up-counter)

Channel 4: TCNT4 (up/down-counter*)

Channel 5: TCNT5 (up/down-counter*)

Bit	:	15	14	13	12	11	10	9	8	7	6	5	4	3	2	1	0
Initial value	:	0	0	0	0	0	0	0	0	0	0	0	0	0	0	0	0
R/W	:	R/W	R/W	R/W	R/W	R/W	R/W	R/W	R/W	R/W	R/W	R/W	R/W	R/W	R/W	R/W	R/W

Note: * These counters can be used as up/down-counters only in phase counting mode or when counting overflow/underflow on another channel. In other cases they function as up-counters.

The TCNT registers are 16-bit counters. The TPU has six TCNT counters, one for each channel.

The TCNT counters are initialized to H'0000 by a reset, and in hardware standby mode.

The TCNT counters cannot be accessed in 8-bit units; they must always be accessed as a 16-bit unit.

10.2.7 Timer General Register (TGR)

Bit	:	15	14	13	12	11	10	9	8	7	6	5	4	3	2	1	0
Initial value	:	1	1	1	1	1	1	1	1	1	1	1	1	1	1	1	1
R/W	:	R/W	R/W	R/W	R/W	R/W	R/W	R/W	R/W	R/W	R/W	R/W	R/W	R/W	R/W	R/W	R/W

The TGR registers are 16-bit registers with a dual function as output compare and input capture registers. The TPU has 16 TGR registers, four each for channels 0 and 3 and two each for channels 1, 2, 4, and 5. TGRC and TGRD for channels 0 and 3 can also be designated for operation as buffer registers*. The TGR registers are initialized to H'FFFF by a reset, and in hardware standby mode.

The TGR registers cannot be accessed in 8-bit units; they must always be accessed as a 16-bit unit.

Note: * TGR buffer register combinations are TGRA—TGRC and TGRB—TGRD.

10.2.8 Timer Start Register (TSTR)

Bit	:	7	6	5	4	3	2	1	0
		—	—	CST5	CST4	CST3	CST2	CST1	CST0
Initial value	:	0	0	0	0	0	0	0	0
R/W	:	—	—	R/W	R/W	R/W	R/W	R/W	R/W

TSTR is an 8-bit readable/writable register that selects operation/stoppage for channels 0 to 5. TSTR is initialized to H'00 by a reset, and in hardware standby mode. When setting the operating mode in TMDR or setting the count clock in TCR, first stop the TCNT counter.

Bits 7 and 6—Reserved: Should always be written with 0.

Bits 5 to 0—Counter Start 5 to 0 (CST5 to CST0): These bits select operation or stoppage for TCNT.

Bit n CSTn	Description	
0	TCNTn count operation is stopped	(Initial value)
1	TCNTn performs count operation	

n = 5 to 0

Note: If 0 is written to the CST bit during operation with the TIOC pin designated for output, the counter stops but the TIOC pin output compare output level is retained. If TIOR is written to when the CST bit is cleared to 0, the pin output level will be changed to the set initial output value.

10.2.9 Timer Synchro Register (TSYR)

Bit :	7	6	5	4	3	2	1	0
	—	—	SYNC5	SYNC4	SYNC3	SYNC2	SYNC1	SYNC0
Initial value :	0	0	0	0	0	0	0	0
R/W :	—	—	R/W	R/W	R/W	R/W	R/W	R/W

TSYR is an 8-bit readable/writable register that selects independent operation or synchronous operation for the channel 0 to 4 TCNT counters. A channel performs synchronous operation when the corresponding bit in TSYR is set to 1.

TSYR is initialized to H'00 by a reset, and in hardware standby mode.

Bits 7 and 6—Reserved: Should always be written with 0.

Bits 5 to 0—Timer Synchro 5 to 0 (SYNC5 to SYNC0): These bits select whether operation is independent of or synchronized with other channels.

When synchronous operation is selected, synchronous presetting of multiple channels*[1], and synchronous clearing through counter clearing on another channel*[2] are possible.

Notes: 1. To set synchronous operation, the SYNC bits for at least two channels must be set to 1.
2. To set synchronous clearing, in addition to the SYNC bit, the TCNT clearing source must also be set by means of bits CCLR2 to CCLR0 in TCR.

Bit n SYNCn	Description	
0	TCNTn operates independently (TCNT presetting/clearing is unrelated to other channels)	(Initial value)
1	TCNTn performs synchronous operation TCNT synchronous presetting/synchronous clearing is possible	

n = 5 to 0

10.2.10 Module Stop Control Register (MSTPCR)

	MSTPCRH								MSTPCRL							
Bit :	15	14	13	12	11	10	9	8	7	6	5	4	3	2	1	0
Initial value :	0	0	1	1	1	1	1	1	1	1	1	1	1	1	1	1
R/W :	R/W	R/W	R/W	R/W	R/W	R/W	R/W	R/W	R/W	R/W	R/W	R/W	R/W	R/W	R/W	R/W

MSTPCR is a 16-bit readable/writable register that performs module stop mode control.

When the MSTP13 bit in MSTPCR is set to 1, TPU operation stops at the end of the bus cycle and a transition is made to module stop mode. Registers cannot be read or written to in module stop mode. For details, see section 21.5, Module Stop Mode.

MSTPCR is initialized to H'3FFF by a reset and in hardware standby mode. It is not initialized in software standby mode.

Bit 13—Module Stop (MSTP13): Specifies the TPU module stop mode.

Bit 13 MSTP13	Description	
0	TPU module stop mode cleared	
1	TPU module stop mode set	(Initial value)

10.3 Interface to Bus Master

10.3.1 16-Bit Registers

TCNT and TGR are 16-bit registers. As the data bus to the bus master is 16 bits wide, these registers can be read and written to in 16-bit units.

These registers cannot be read or written to in 8-bit units; 16-bit access must always be used.

An example of 16-bit register access operation is shown in figure 10-2.

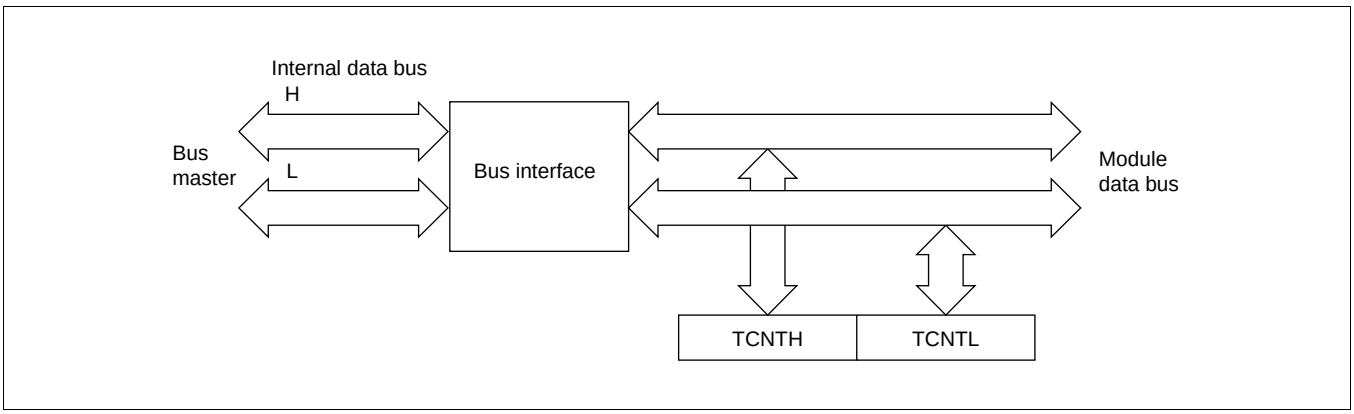

Figure 10-2 16-Bit Register Access Operation [Bus Master ↔ TCNT (16 Bits)]

10.3.2 8-Bit Registers

Registers other than TCNT and TGR are 8-bit. As the data bus to the CPU is 16 bits wide, these registers can be read and written to in 16-bit units. They can also be read and written to in 8-bit units.

Examples of 8-bit register access operation are shown in figures 10-3 to 10-5.

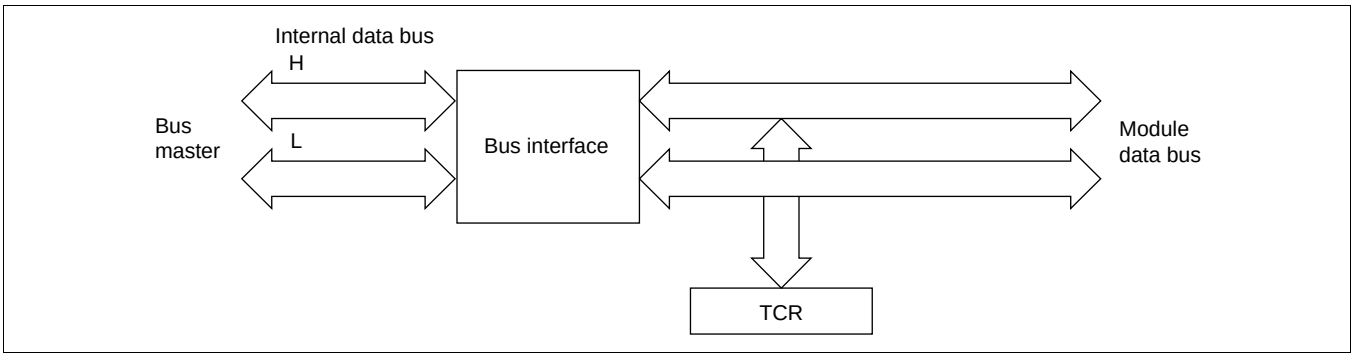

Figure 10-3 8-Bit Register Access Operation [Bus Master ↔ TCR (Upper 8 Bits)]

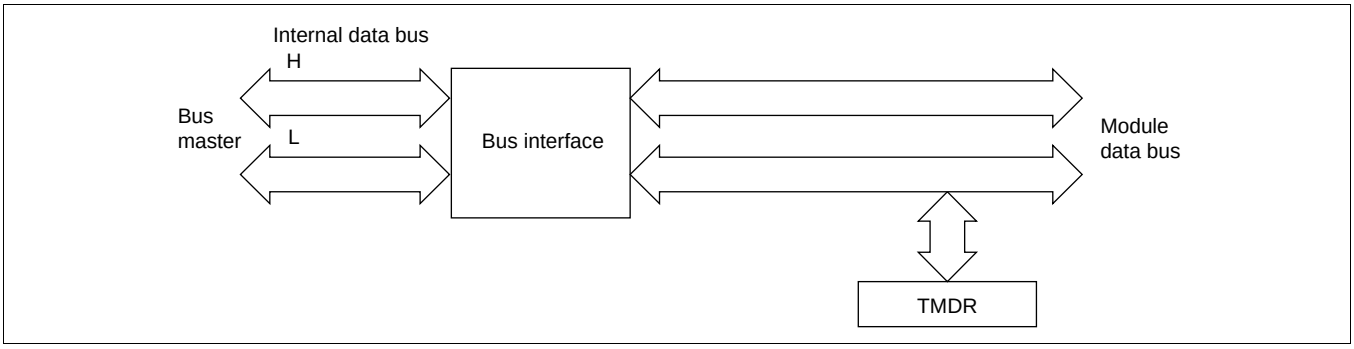

Figure 10-4 8-Bit Register Access Operation [Bus Master ↔ TMDR (Lower 8 Bits)]

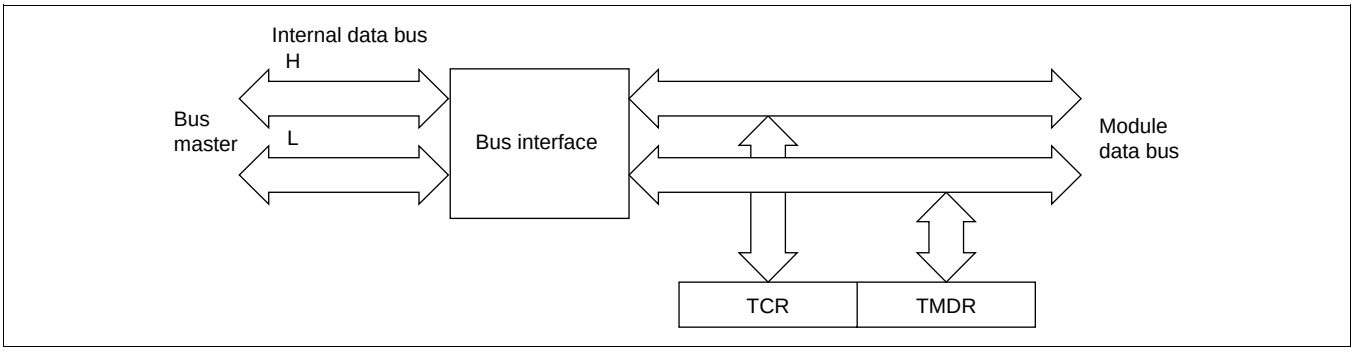

Figure 10-5 8-Bit Register Access Operation [Bus Master ↔ TCR and TMDR (16 Bits)]

10.4 Operation

10.4.1 Overview

Operation in each mode is outlined below.

Normal Operation: Each channel has a TCNT and TGR register. TCNT performs up-counting, and is also capable of free-running operation, synchronous counting, and external event counting.

Each TGR can be used as an input capture register or output compare register.

Synchronous Operation: When synchronous operation is designated for a channel, TCNT for that channel performs synchronous presetting. That is, when TCNT for a channel designated for synchronous operation is rewritten, the TCNT counters for the other channels are also rewritten at the same time. Synchronous clearing of the TCNT counters is also possible by setting the timer synchronization bits in TSYR for channels designated for synchronous operation.

Buffer Operation

- When TGR is an output compare register
  When a compare match occurs, the value in the buffer register for the relevant channel is transferred to TGR.
- When TGR is an input capture register
  When input capture occurs, the value in TCNT is transfer to TGR and the value previously held in TGR is transferred to the buffer register.

Cascaded Operation: The channel 1 counter (TCNT1), channel 2 counter (TCNT2), channel 4 counter (TCNT4), and channel 5 counter (TCNT5) can be connected together to operate as a 32-bit counter.

PWM Mode: In this mode, a PWM waveform is output. The output level can be set by means of TIOR. A PWM waveform with a duty of between 0% and 100% can be output, according to the setting of each TGR register.

Phase Counting Mode: In this mode, TCNT is incremented or decremented by detecting the phases of two clocks input from the external clock input pins in channels 1, 2, 4, and 5. When phase counting mode is set, the corresponding TCLK pin functions as the clock pin, and TCNT performs up- or down-counting.

This can be used for two-phase encoder pulse input.

10.4.2 Basic Functions

Counter Operation: When one of bits CST0 to CST5 is set to 1 in TSTR, the TCNT counter for the corresponding channel starts counting. TCNT can operate as a free-running counter, periodic counter, and so on.

- Example of count operation setting procedure

  Figure 10-6 shows an example of the count operation setting procedure.

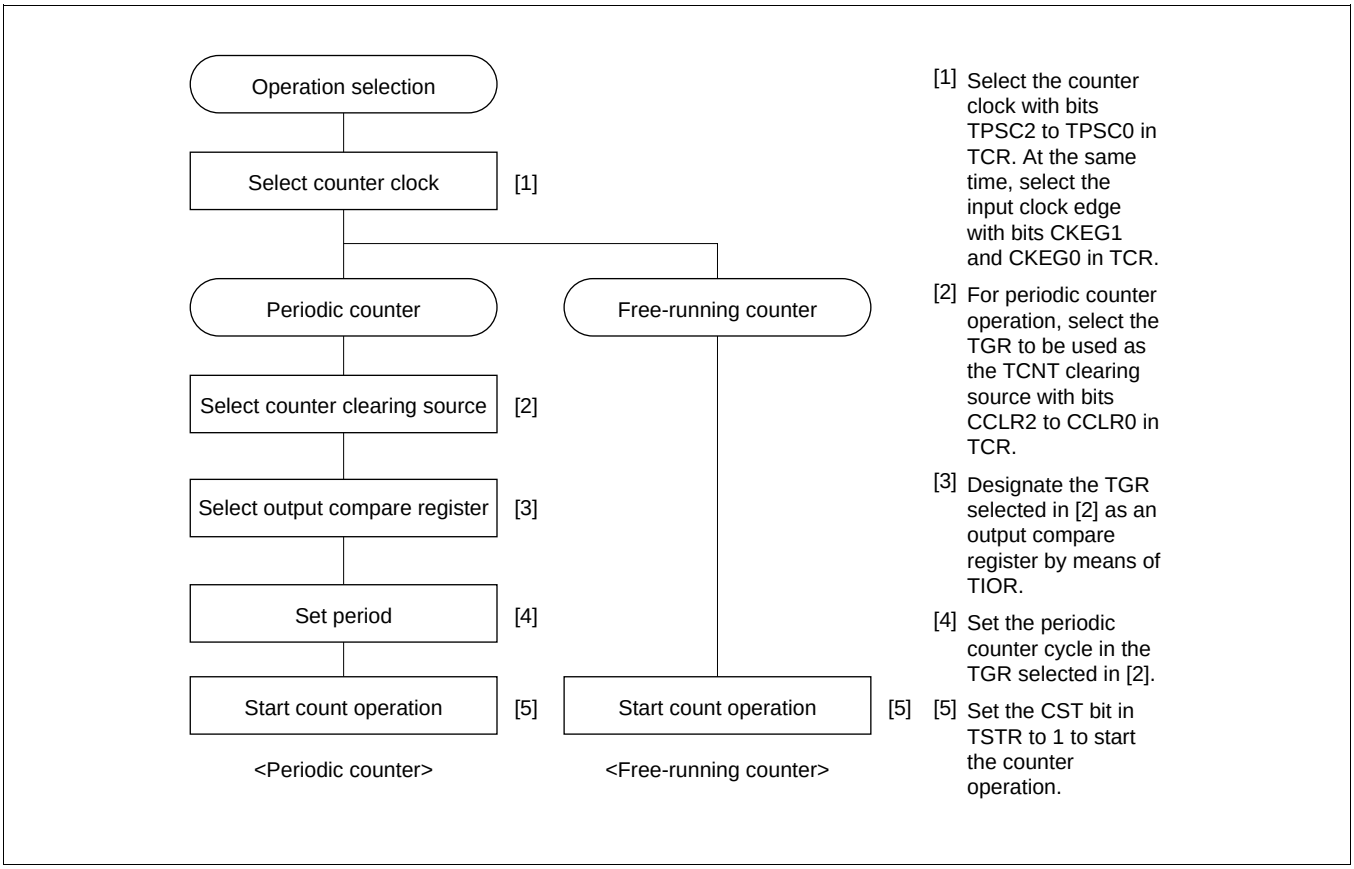

Figure 10-6 Example of Counter Operation Setting Procedure

- Free-running count operation and periodic count operation

  Immediately after a reset, the TPU's TCNT counters are all designated as free-running counters. When the relevant bit in TSTR is set to 1 the corresponding TCNT counter starts up-count operation as a free-running counter. When TCNT overflows (from H'FFFF to H'0000), the TCFV bit in TSR is set to 1. If the value of the corresponding TCIEV bit in TIER is 1 at this point, the TPU requests an interrupt. After overflow, TCNT starts counting up again from H'0000.

  Figure 10-7 illustrates free-running counter operation.

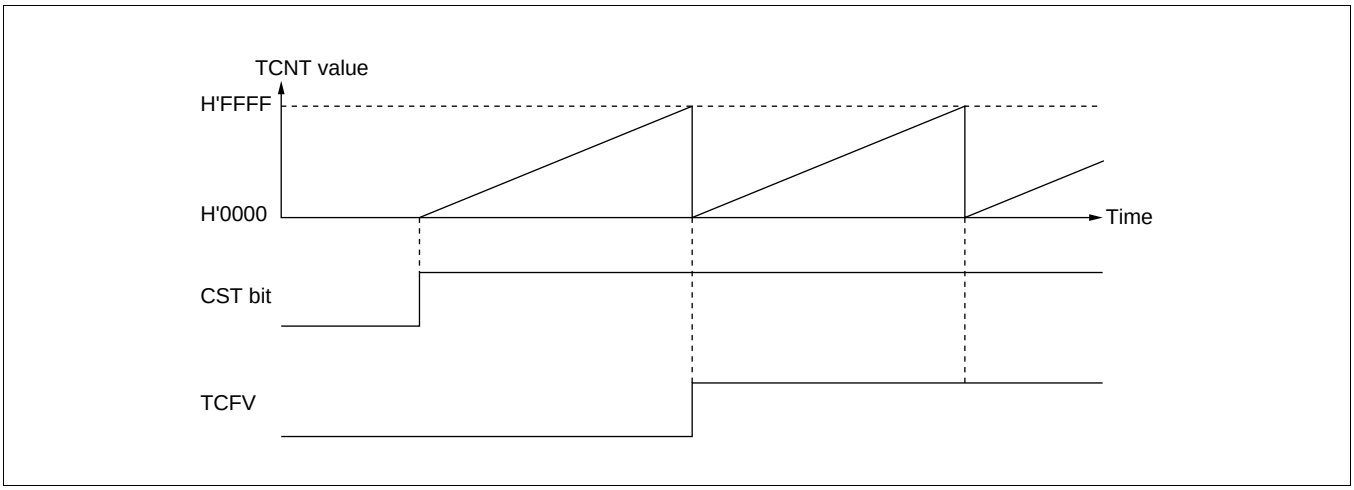

Figure 10-7 Free-Running Counter Operation

When compare match is selected as the TCNT clearing source, the TCNT counter for the relevant channel performs periodic count operation. The TGR register for setting the period is designated as an output compare register, and counter clearing by compare match is selected by means of bits CCLR2 to CCLR0 in TCR. After the settings have been made, TCNT starts up-count operation as periodic counter when the corresponding bit in TSTR is set to 1. When the count value matches the value in TGR, the TGF bit in TSR is set to 1 and TCNT is cleared to H'0000.

If the value of the corresponding TGIE bit in TIER is 1 at this point, the TPU requests an interrupt. After a compare match, TCNT starts counting up again from H'0000.

Figure 10-8 illustrates periodic counter operation.

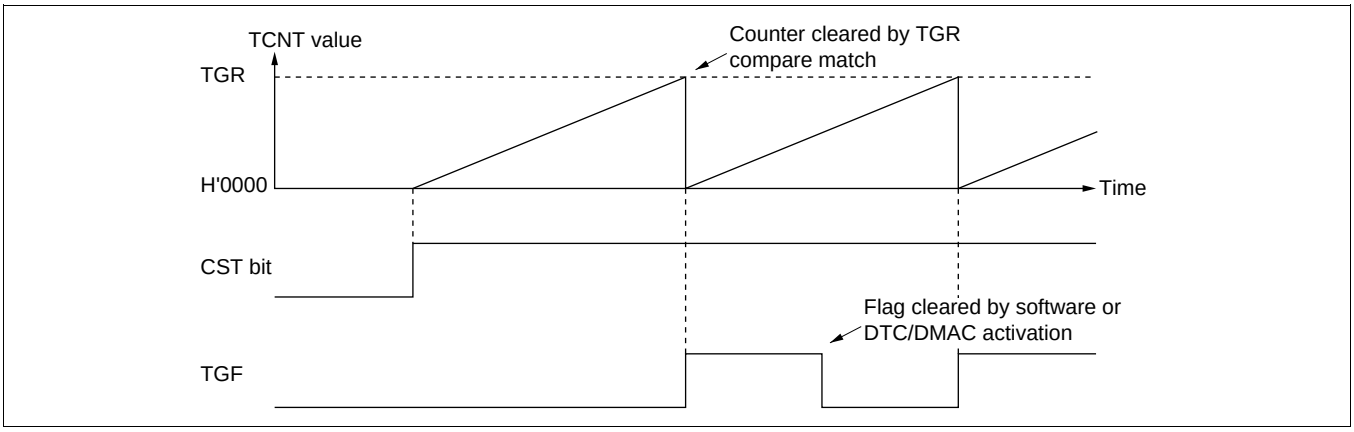

Figure 10-8 Periodic Counter Operation

Waveform Output by Compare Match: The TPU can perform 0, 1, or toggle output from the corresponding output pin using compare match.

- Example of setting procedure for waveform output by compare match

  Figure 10-9 shows an example of the setting procedure for waveform output by compare match

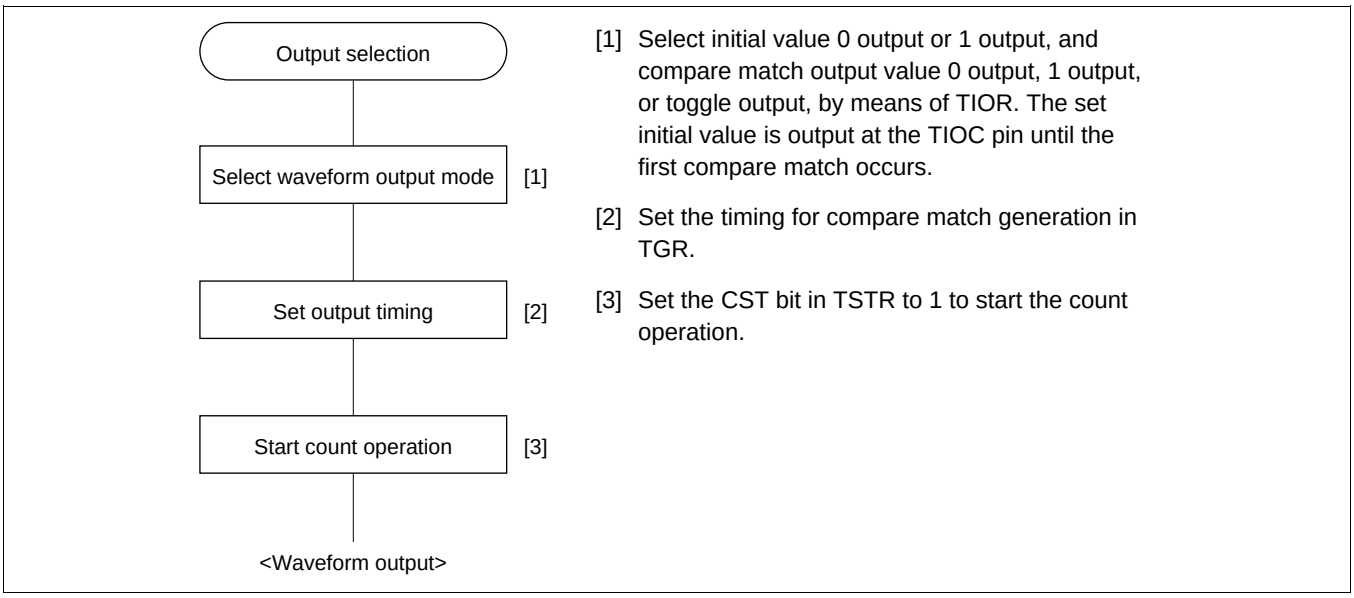

Figure 10-9 Example of Setting Procedure for Waveform Output by Compare Match

- Examples of waveform output operation

  Figure 10-10 shows an example of 0 output/1 output.

  In this example TCNT has been designated as a free-running counter, and settings have been made so that 1 is output by compare match A, and 0 is output by compare match B. When the set level and the pin level coincide, the pin level does not change.

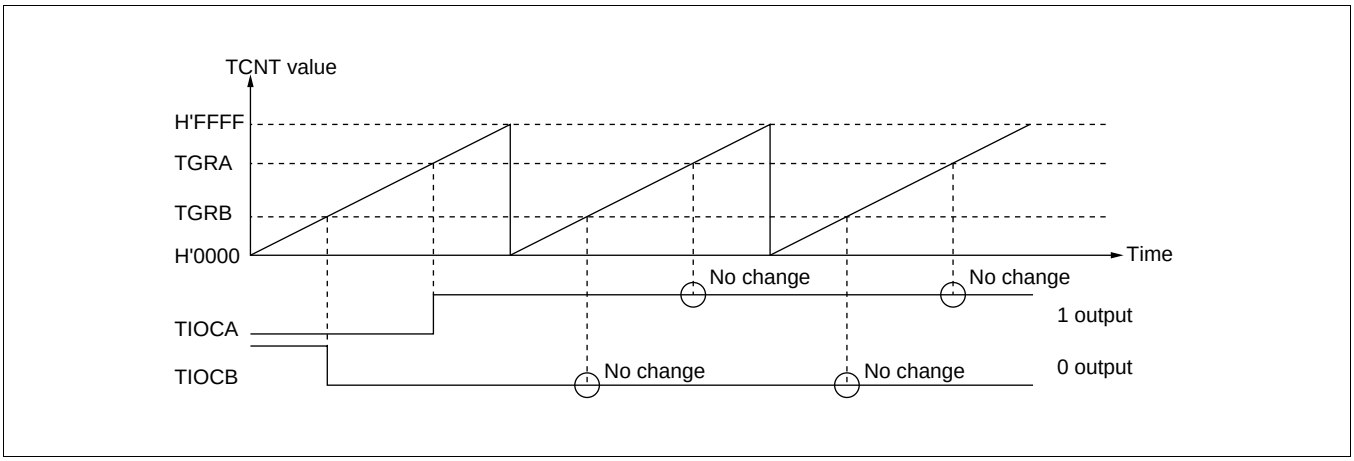

Figure 10-10 Example of 0 Output/1 Output Operation

Figure 10-11 shows an example of toggle output.

In this example TCNT has been designated as a periodic counter (with counter clearing performed by compare match B), and settings have been made so that output is toggled by both compare match A and compare match B.

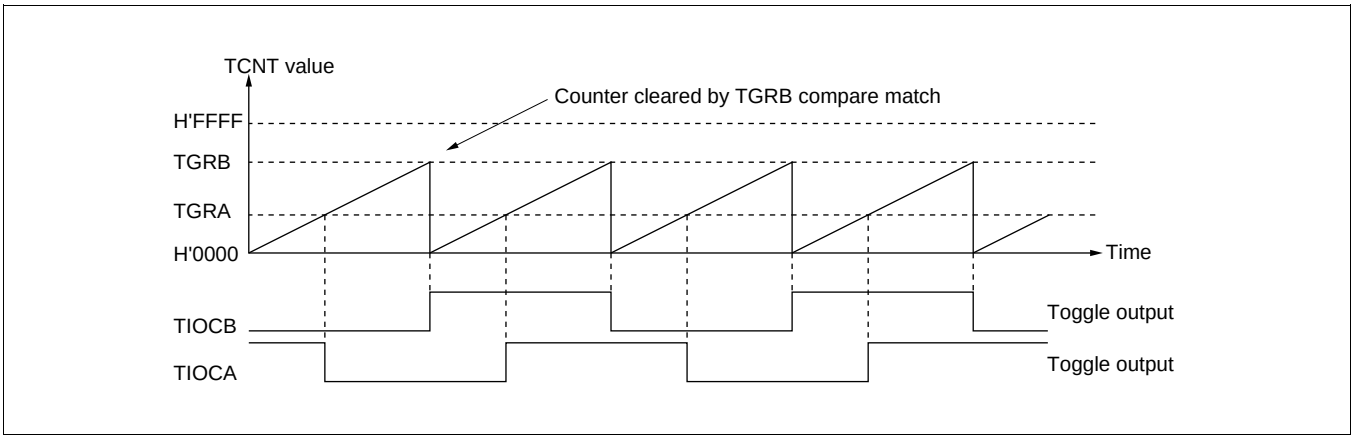

Figure 10-11 Example of Toggle Output Operation

Input Capture Function: The TCNT value can be transferred to TGR on detection of the TIOC pin input edge.

Rising edge, falling edge, or both edges can be selected as the detected edge. For channels 0, 1, 3, and 4, it is also possible to specify another channel's counter input clock or compare match signal as the input capture source.

Note: When another channel's counter input clock is used as the input capture input for channels 0 and 3, ø/1 should not be selected as the counter input clock used for input capture input. Input capture will not be generated if ø/1 is selected.

- Example of input capture operation setting procedure

  Figure 10-12 shows an example of the input capture operation setting procedure.

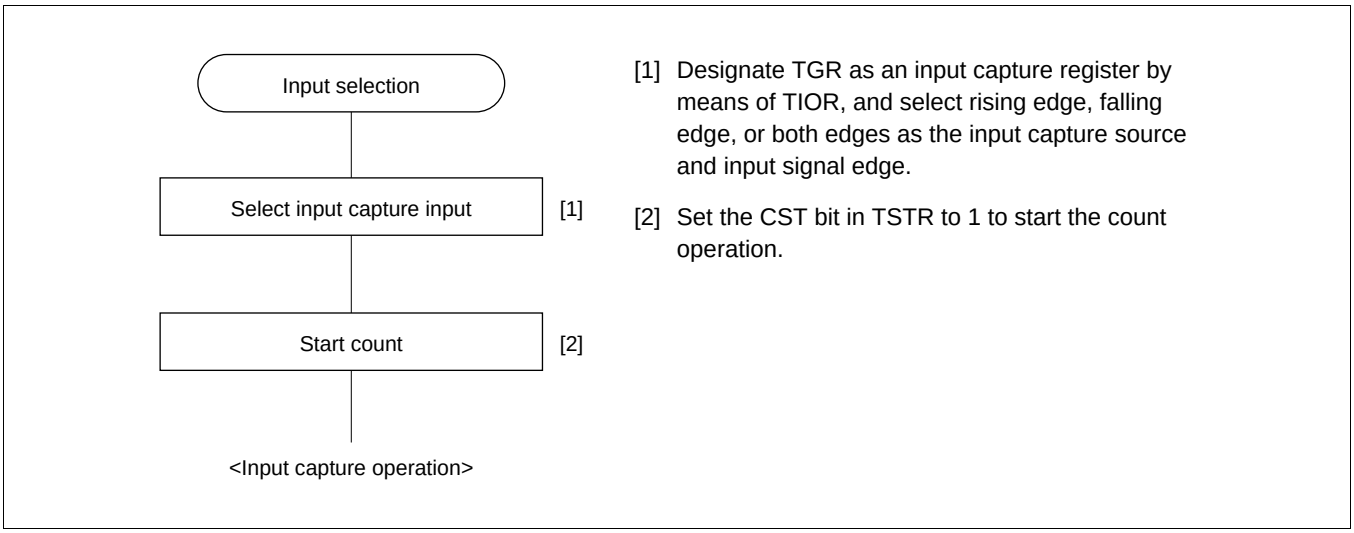

Figure 10-12 Example of Input Capture Operation Setting Procedure

- Example of input capture operation

  Figure 10-13 shows an example of input capture operation.

  In this example both rising and falling edges have been selected as the TIOCA pin input capture input edge, falling edge has been selected as the TIOCB pin input capture input edge, and counter clearing by TGRB input capture has been designated for TCNT.

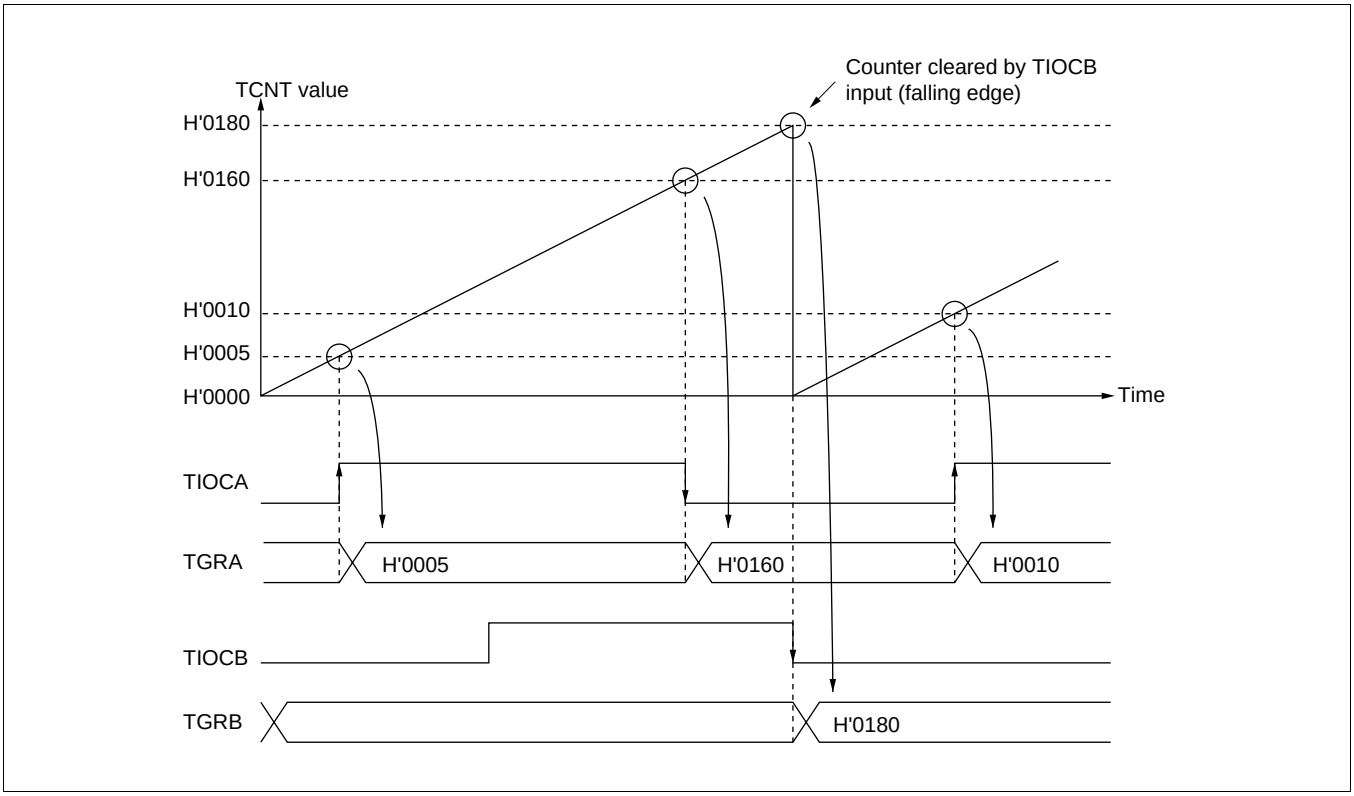

Figure 10-13 Example of Input Capture Operation

10.4.3 Synchronous Operation

In synchronous operation, the values in a number of TCNT counters can be rewritten simultaneously (synchronous presetting). Also, a number of TCNT counters can be cleared simultaneously by making the appropriate setting in TCR (synchronous clearing).

Synchronous operation enables TGR to be incremented with respect to a single time base.

Channels 0 to 5 can all be designated for synchronous operation.

Example of Synchronous Operation Setting Procedure: Figure 10-14 shows an example of the synchronous operation setting procedure.

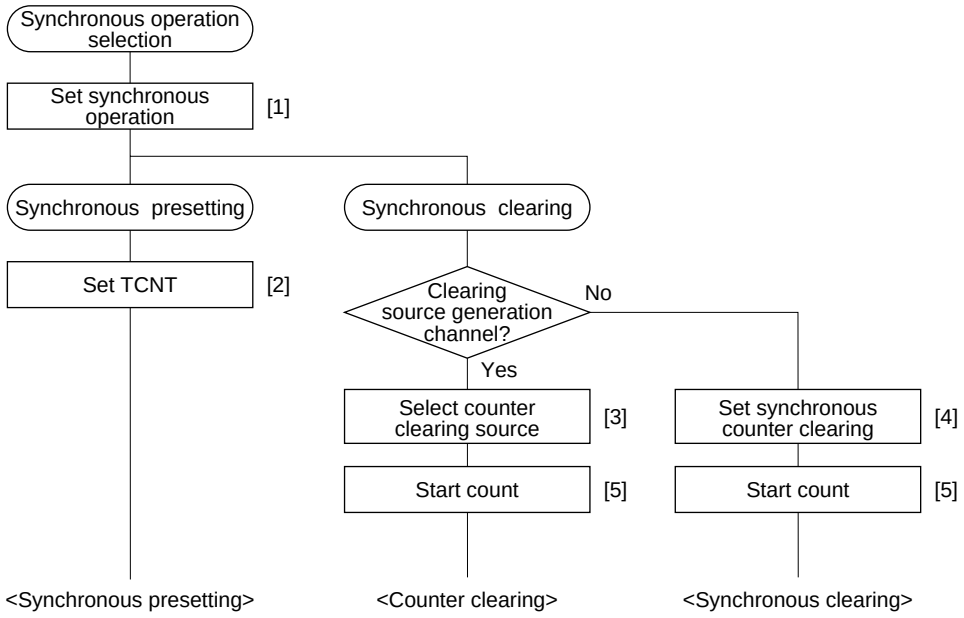

[1] Set to 1 the SYNC bits in TSYR corresponding to the channels to be designated for synchronous operation.

[2] When the TCNT counter of any of the channels designated for synchronous operation is written to, the same value is simultaneously written to the other TCNT counters.

[3] Use bits CCLR2 to CCLR0 in TCR to specify TCNT clearing by input capture/output compare, etc.

[4] Use bits CCLR2 to CCLR0 in TCR to designate synchronous clearing for the counter clearing source.

[5] Set to 1 the CST bits in TSTR for the relevant channels, to start the count operation.

Figure 10-14 Example of Synchronous Operation Setting Procedure

Example of Synchronous Operation: Figure 10-15 shows an example of synchronous operation.

In this example, synchronous operation and PWM mode 1 have been designated for channels 0 to 2, TGR0B compare match has been set as the channel 0 counter clearing source, and synchronous clearing has been set for the channel 1 and 2 counter clearing sources.

Three-phase PWM waveforms are output from pins TIOC0A, TIOC1A, and TIOC2A. At this time, synchronous presetting, and synchronous clearing by TGR0B compare match, is performed for channel 0 to 2 TCNT counters, and the data set in TGR0B is used as the PWM cycle.

For details of PWM modes, see section 10.4.6, PWM Modes.

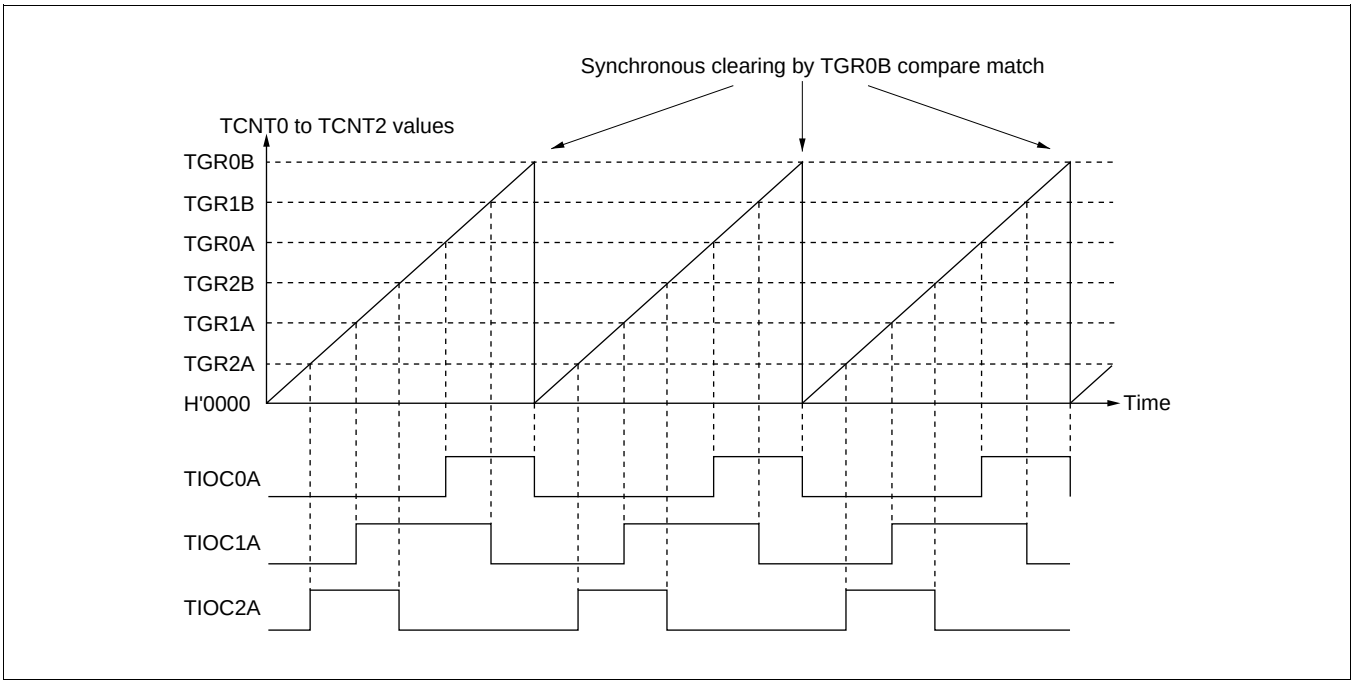

Figure 10-15 Example of Synchronous Operation

10.4.4 Buffer Operation

Buffer operation, provided for channels 0 and 3, enables TGRC and TGRD to be used as buffer registers.

Buffer operation differs depending on whether TGR has been designated as an input capture register or as a compare match register.

Table 10-5 shows the register combinations used in buffer operation.

Table 10-5 Register Combinations in Buffer Operation

Channel	Timer General Register	Buffer Register
0	TGR0A	TGR0C
	TGR0B	TGR0D
3	TGR3A	TGR3C
	TGR3B	TGR3D

- When TGR is an output compare register

  When a compare match occurs, the value in the buffer register for the corresponding channel is transferred to the timer general register.

  This operation is illustrated in figure 10-16.

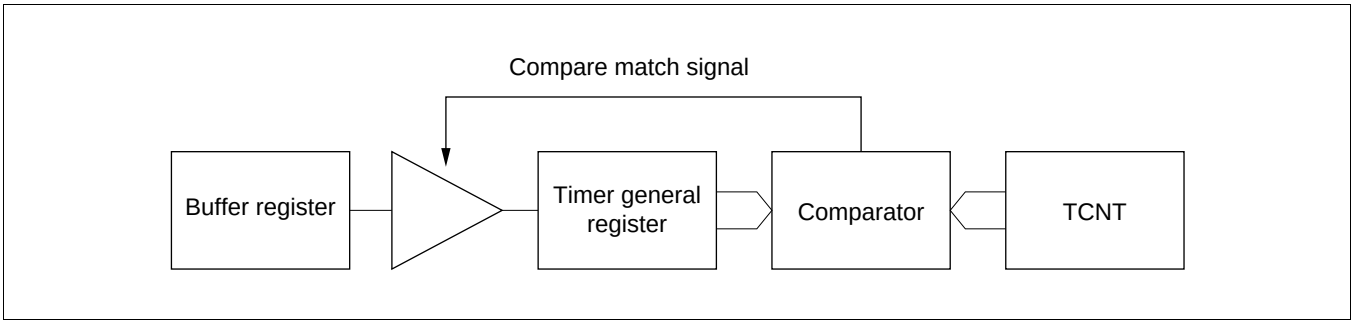

Figure 10-16 Compare Match Buffer Operation

- When TGR is an input capture register

  When input capture occurs, the value in TCNT is transferred to TGR and the value previously held in the timer general register is transferred to the buffer register.

  This operation is illustrated in figure 10-17.

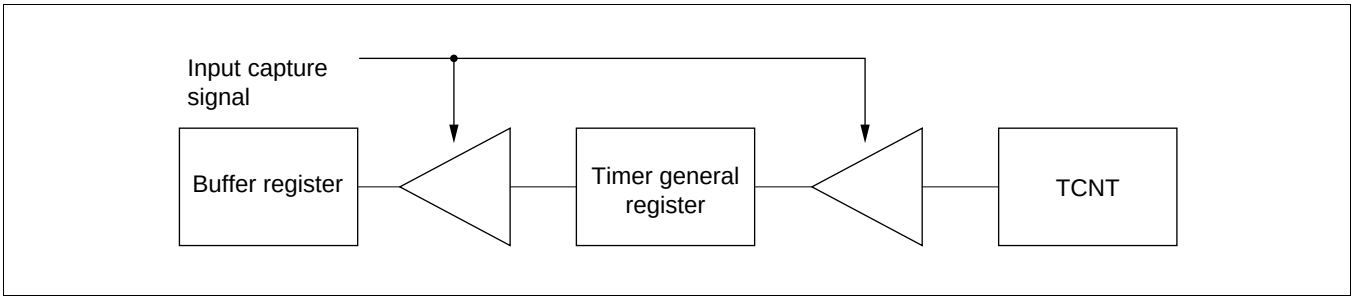

Figure 10-17 Input Capture Buffer Operation

Example of Buffer Operation Setting Procedure: Figure 10-18 shows an example of the buffer operation setting procedure.

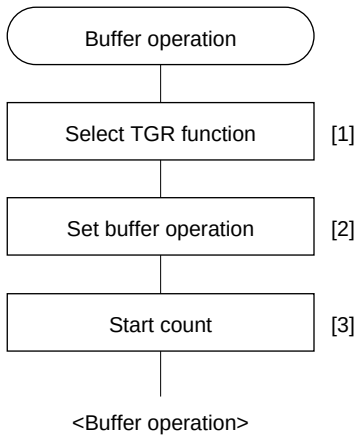

[1] Designate TGR as an input capture register or output compare register by means of TIOR.

[2] Designate TGR for buffer operation with bits BFA and BFB in TMDR.

[3] Set the CST bit in TSTR to 1 to start the count operation.

Figure 10-18 Example of Buffer Operation Setting Procedure

Examples of Buffer Operation

- When TGR is an output compare register

  Figure 10-19 shows an operation example in which PWM mode 1 has been designated for channel 0, and buffer operation has been designated for TGRA and TGRC. The settings used in this example are TCNT clearing by compare match B, 1 output at compare match A, and 0 output at compare match B.

  As buffer operation has been set, when compare match A occurs the output changes and the value in buffer register TGRC is simultaneously transferred to timer general register TGRA. This operation is repeated each time compare match A occurs.

  For details of PWM modes, see section 10.4.6, PWM Modes.

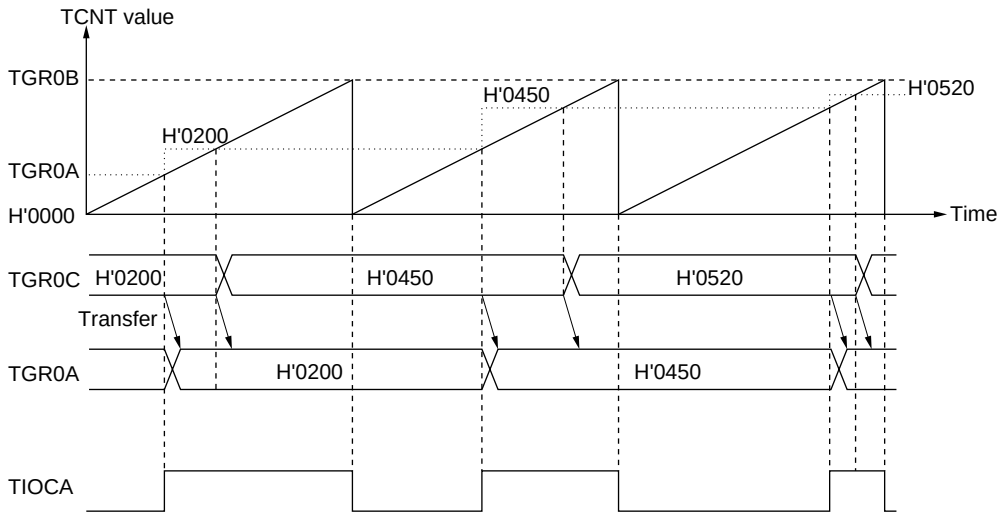

Figure 10-19 Example of Buffer Operation (1)

- When TGR is an input capture register

  Figure 10-20 shows an operation example in which TGRA has been designated as an input capture register, and buffer operation has been designated for TGRA and TGRC.

  Counter clearing by TGRA input capture has been set for TCNT, and both rising and falling edges have been selected as the TIOCA pin input capture input edge.

  As buffer operation has been set, when the TCNT value is stored in TGRA upon occurrence of input capture A, the value previously stored in TGRA is simultaneously transferred to TGRC.

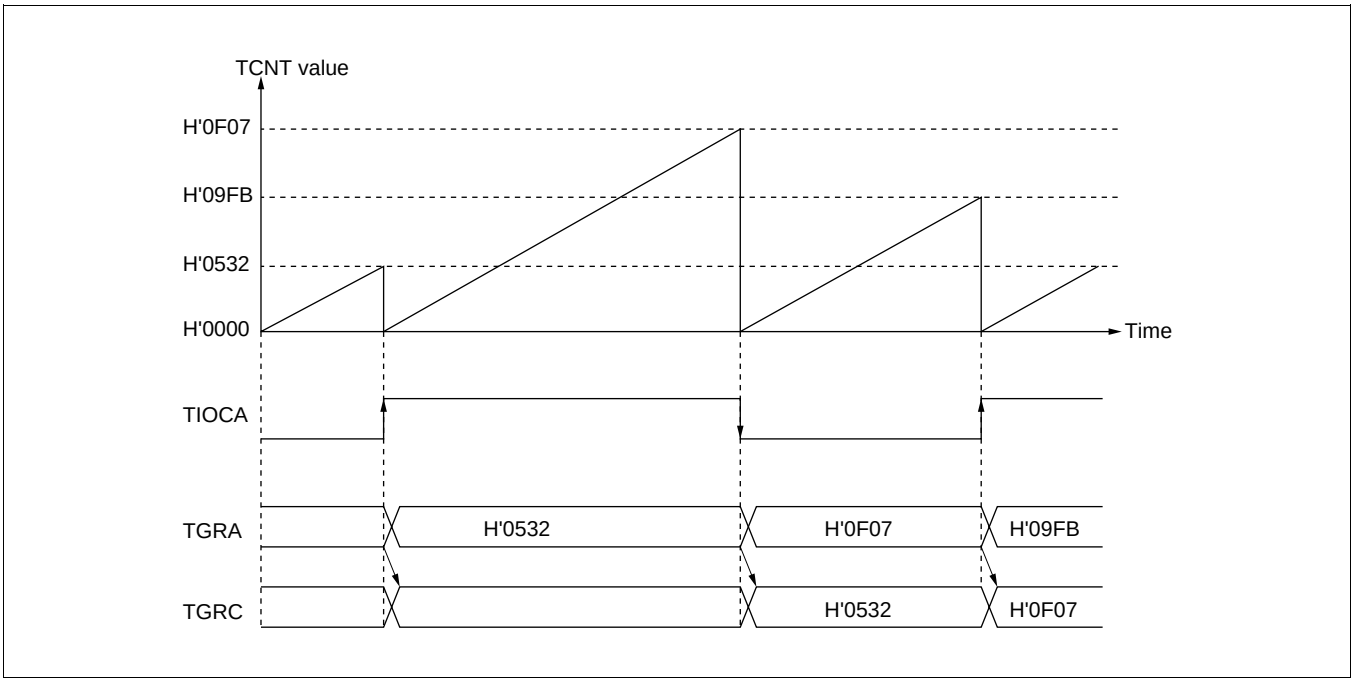

Figure 10-20 Example of Buffer Operation (2)

10.4.5 Cascaded Operation

In cascaded operation, two 16-bit counters for different channels are used together as a 32-bit counter.

This function works by counting the channel 1 (channel 4) counter clock upon overflow/underflow of TCNT2 (TCNT5) as set in bits TPSC2 to TPSC0 in TCR.

Underflow occurs only when the lower 16-bit TCNT is in phase-counting mode.

Table 10-6 shows the register combinations used in cascaded operation.

Note: When phase counting mode is set for channel 1 or 4, the counter clock setting is invalid and the counter operates independently in phase counting mode.

Table 10-6 Cascaded Combinations

Combination	Upper 16 Bits	Lower 16 Bits
Channels 1 and 2	TCNT1	TCNT2
Channels 4 and 5	TCNT4	TCNT5

Example of Cascaded Operation Setting Procedure: Figure 10-21 shows an example of the setting procedure for cascaded operation.

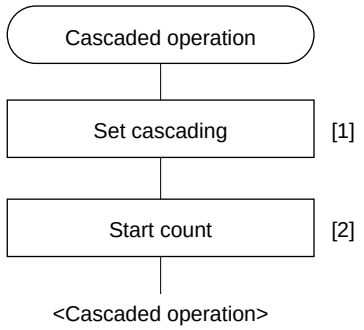

[1] Set bits TPSC2 to TPSC0 in the channel 1 (channel 4) TCR to B'111 to select TCNT2 (TCNT5) overflow/underflow counting.

[2] Set the CST bit in TSTR for the upper and lower channel to 1 to start the count operation.

Figure 10-21 Cascaded Operation Setting Procedure

Examples of Cascaded Operation: Figure 10-22 illustrates the operation when counting upon TCNT2 overflow/underflow has been set for TCNT1, TGR1A and TGR2A have been designated as input capture registers, and TIOC pin rising edge has been selected.

When a rising edge is input to the TIOCA1 and TIOCA2 pins simultaneously, the upper 16 bits of the 32-bit data are transferred to TGR1A, and the lower 16 bits to TGR2A.

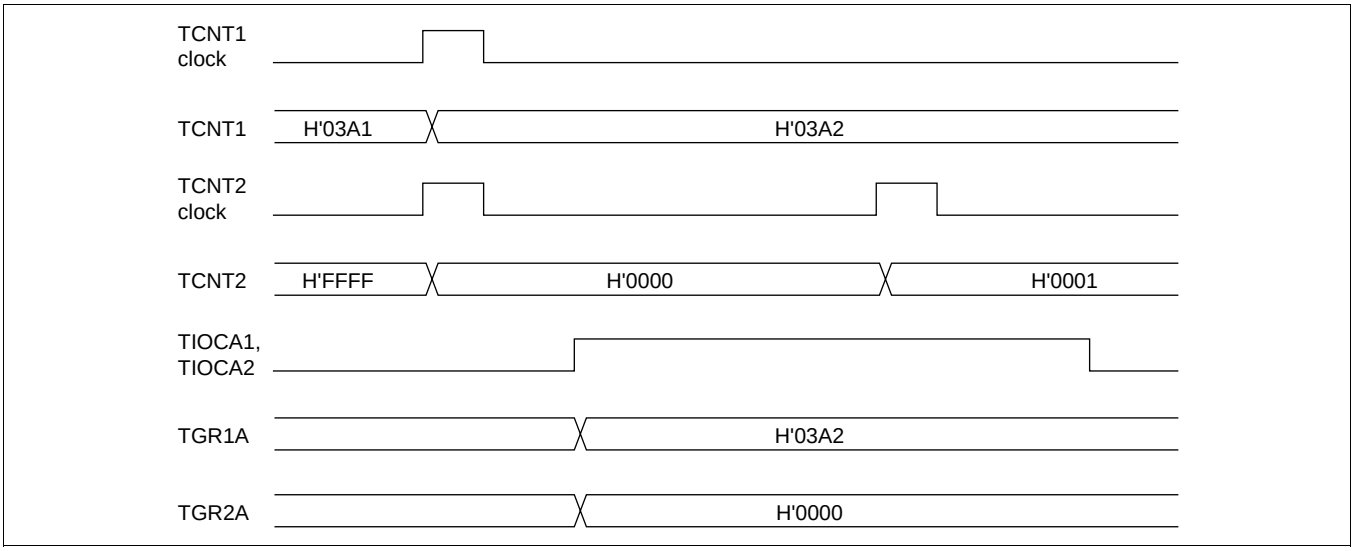

Figure 10-22 Example of Cascaded Operation (1)

Figure 10-23 illustrates the operation when counting upon TCNT2 overflow/underflow has been set for TCNT1, and phase counting mode has been designated for channel 2.

TCNT1 is incremented by TCNT2 overflow and decremented by TCNT2 underflow.

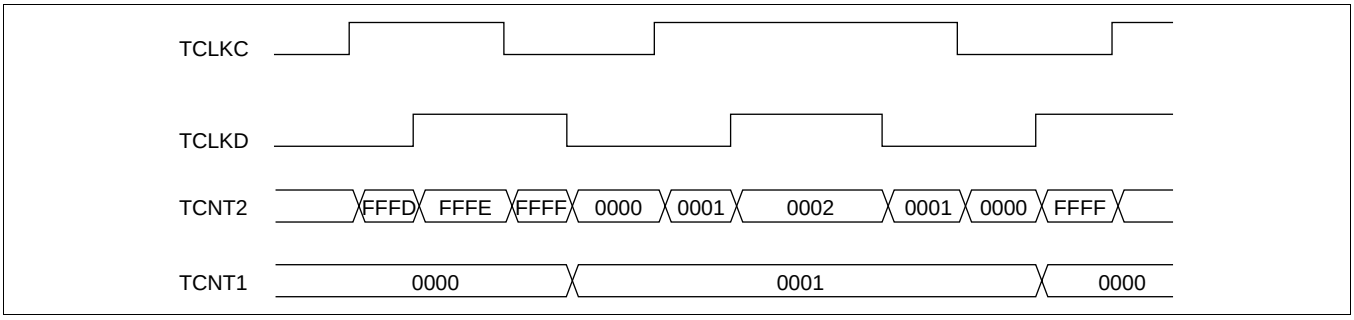

Figure 10-23 Example of Cascaded Operation (2)

10.4.6 PWM Modes

In PWM mode, PWM waveforms are output from the output pins. 0, 1, or toggle output can be selected as the output level in response to compare match of each TGR.

Designating TGR compare match as the counter clearing source enables the period to be set in that register. All channels can be designated for PWM mode independently. Synchronous operation is also possible.

There are two PWM modes, as described below.

- PWM mode 1

PWM output is generated from the TIOCA and TIOCC pins by pairing TGRA with TGRB and TGRC with TGRD. The output specified by bits IOA3 to IOA0 and IOC3 to IOC0 in TIOR is output from the TIOCA and TIOCC pins at compare matches A and C, and the output specified by bits IOB3 to IOB0 and IOD3 to IOD0 in TIOR is output at compare matches B and D. The initial output value is the value set in TGRA or TGRC. If the set values of paired TGRs are identical, the output value does not change when a compare match occurs.

In PWM mode 1, a maximum 8-phase PWM output is possible.

- PWM mode 2

  PWM output is generated using one TGR as the cycle register and the others as duty registers. The output specified in TIOR is performed by means of compare matches. Upon counter clearing by a synchronization register compare match, the output value of each pin is the initial value set in TIOR. If the set values of the cycle and duty registers are identical, the output value does not change when a compare match occurs.

  In PWM mode 2, a maximum 15-phase PWM output is possible by combined use with synchronous operation.

The correspondence between PWM output pins and registers is shown in table 10-7.

Table 10-7 PWM Output Registers and Output Pins

		Output Pins	
Channel	**Registers**	**PWM Mode 1**	**PWM Mode 2**
0	TGR0A	TIOCA0	TIOCA0
	TGR0B		TIOCB0
	TGR0C	TIOCC0	TIOCC0
	TGR0D		TIOCD0
1	TGR1A	TIOCA1	TIOCA1
	TGR1B		TIOCB1
2	TGR2A	TIOCA2	TIOCA2
	TGR2B		TIOCB2
3	TGR3A	TIOCA3	TIOCA3
	TGR3B		TIOCB3
	TGR3C	TIOCC3	TIOCC3
	TGR3D		TIOCD3
4	TGR4A	TIOCA4	TIOCA4
	TGR4B		TIOCB4
5	TGR5A	TIOCA5	TIOCA5
	TGR5B		TIOCB5

Note: In PWM mode 2, PWM output is not possible for the TGR register in which the period is set.

Example of PWM Mode Setting Procedure: Figure 10-24 shows an example of the PWM mode setting procedure.

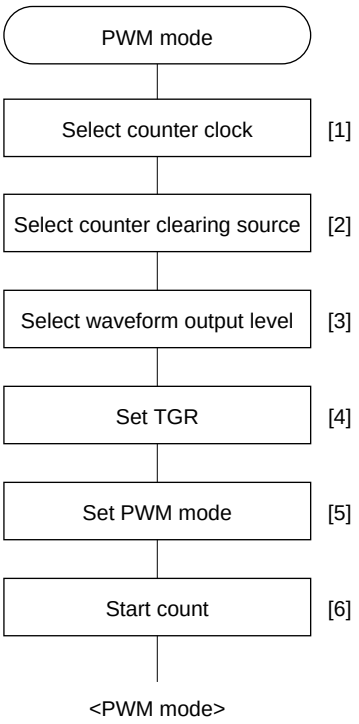

[1] Select the counter clock with bits TPSC2 to TPSC0 in TCR. At the same time, select the input clock edge with bits CKEG1 and CKEG0 in TCR.

[2] Use bits CCLR2 to CCLR0 in TCR to select the TGR to be used as the TCNT clearing source.

[3] Use TIOR to designate the TGR as an output compare register, and select the initial value and output value.

[4] Set the cycle in the TGR selected in [2], and set the duty in the other the TGR.

[5] Select the PWM mode with bits MD3 to MD0 in TMDR.

[6] Set the CST bit in TSTR to 1 to start the count operation.

Figure 10-24 Example of PWM Mode Setting Procedure

Examples of PWM Mode Operation: Figure 10-25 shows an example of PWM mode 1 operation.

In this example, TGRA compare match is set as the TCNT clearing source, 0 is set for the TGRA initial output value and output value, and 1 is set as the TGRB output value.

In this case, the value set in TGRA is used as the period, and the values set in TGRB registers as the duty.

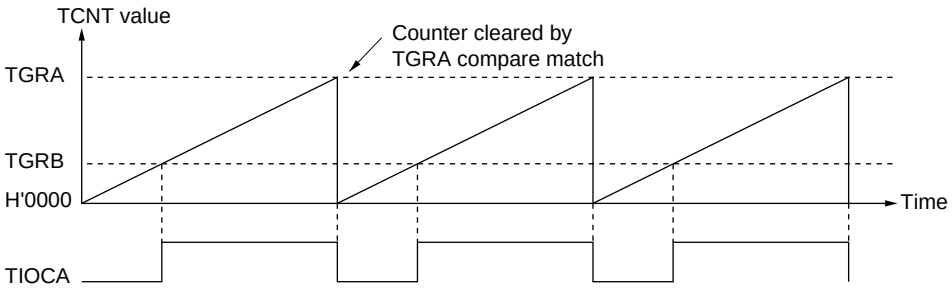

Figure 10-25 Example of PWM Mode Operation (1)

Figure 10-26 shows an example of PWM mode 2 operation.

In this example, synchronous operation is designated for channels 0 and 1, TGR1B compare match is set as the TCNT clearing source, and 0 is set for the initial output value and 1 for the output value of the other TGR registers (TGR0A to TGR0D, TGR1A), to output a 5-phase PWM waveform.

In this case, the value set in TGR1B is used as the cycle, and the values set in the other TGRs as the duty.

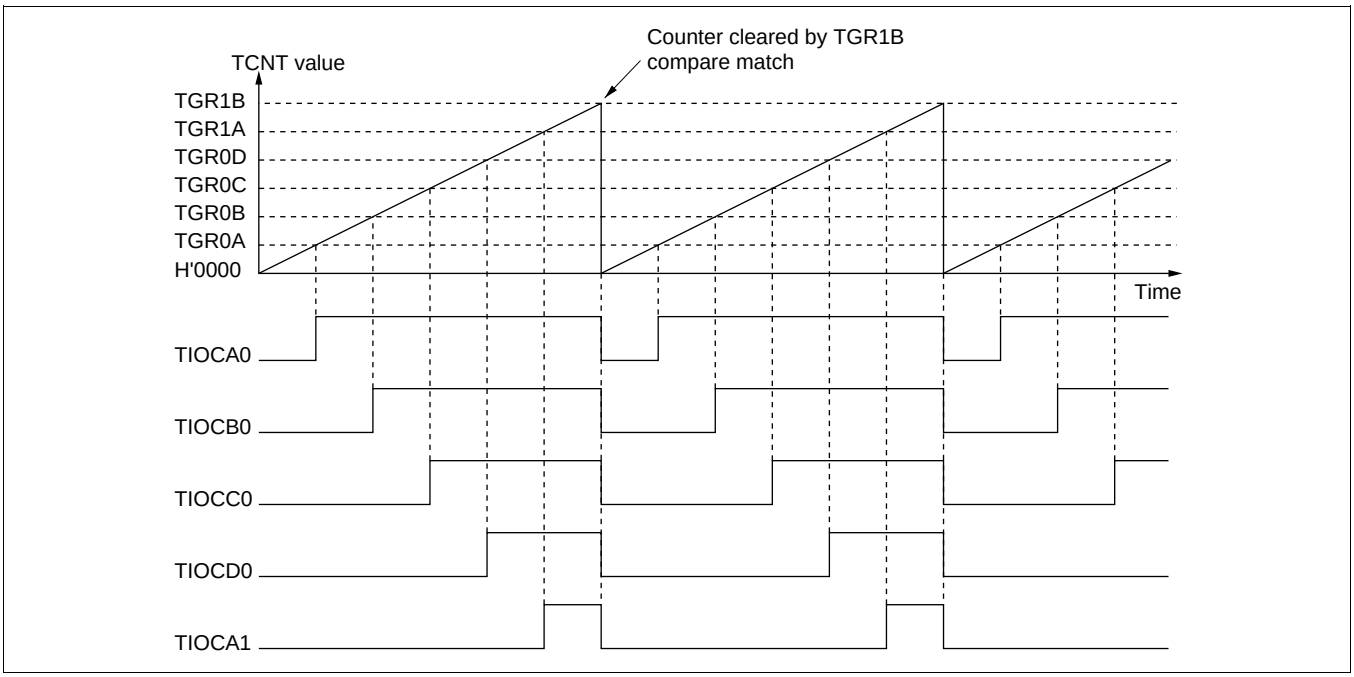

Figure 10-26 Example of PWM Mode Operation (2)

Figure 10-27 shows examples of PWM waveform output with 0% duty and 100% duty in PWM mode.

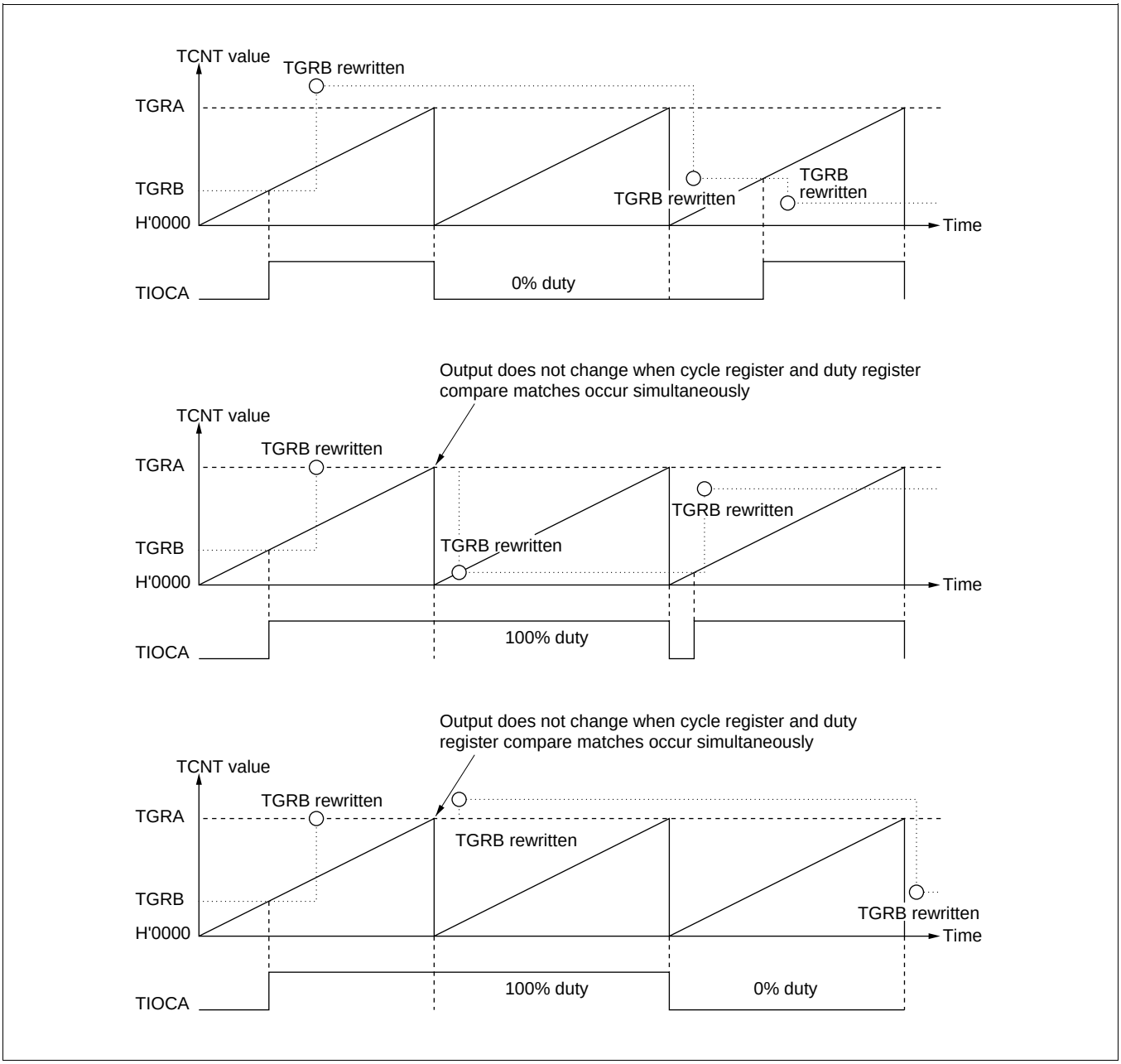

Figure 10-27 Example of PWM Mode Operation (3)

10.4.7 Phase Counting Mode

In phase counting mode, the phase difference between two external clock inputs is detected and TCNT is incremented/decremented accordingly. This mode can be set for channels 1, 2, 4, and 5.

When phase counting mode is set, an external clock is selected as the counter input clock and TCNT operates as an up/down-counter regardless of the setting of bits TPSC2 to TPSC0 and bits CKEG1 and CKEG0 in TCR. However, the functions of bits CCLR1 and CCLR0 in TCR, and of TIOR, TIER, and TGR are valid, and input capture/compare match and interrupt functions can be used.

When overflow occurs while TCNT is counting up, the TCFV flag in TSR is set; when underflow occurs while TCNT is counting down, the TCFU flag is set.

The TCFD bit in TSR is the count direction flag. Reading the TCFD flag provides an indication of whether TCNT is counting up or down.

Table 10-8 shows the correspondence between external clock pins and channels.

Table 10-8 Phase Counting Mode Clock Input Pins

	External Clock Pins	
Channels	**A-Phase**	**B-Phase**
When channel 1 or 5 is set to phase counting mode	TCLKA	TCLKB
When channel 2 or 4 is set to phase counting mode	TCLKC	TCLKD

Example of Phase Counting Mode Setting Procedure: Figure 10-28 shows an example of the phase counting mode setting procedure.

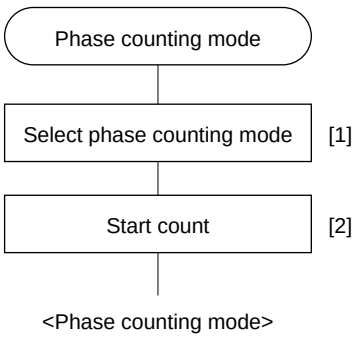

[1] Select phase counting mode with bits MD3 to MD0 in TMDR.

[2] Set the CST bit in TSTR to 1 to start the count operation.

Figure 10-28 Example of Phase Counting Mode Setting Procedure

Examples of Phase Counting Mode Operation: In phase counting mode, TCNT counts up or down according to the phase difference between two external clocks. There are four modes, according to the count conditions.

- Phase counting mode 1

  Figure 10-29 shows an example of phase counting mode 1 operation, and table 10-9 summarizes the TCNT up/down-count conditions.

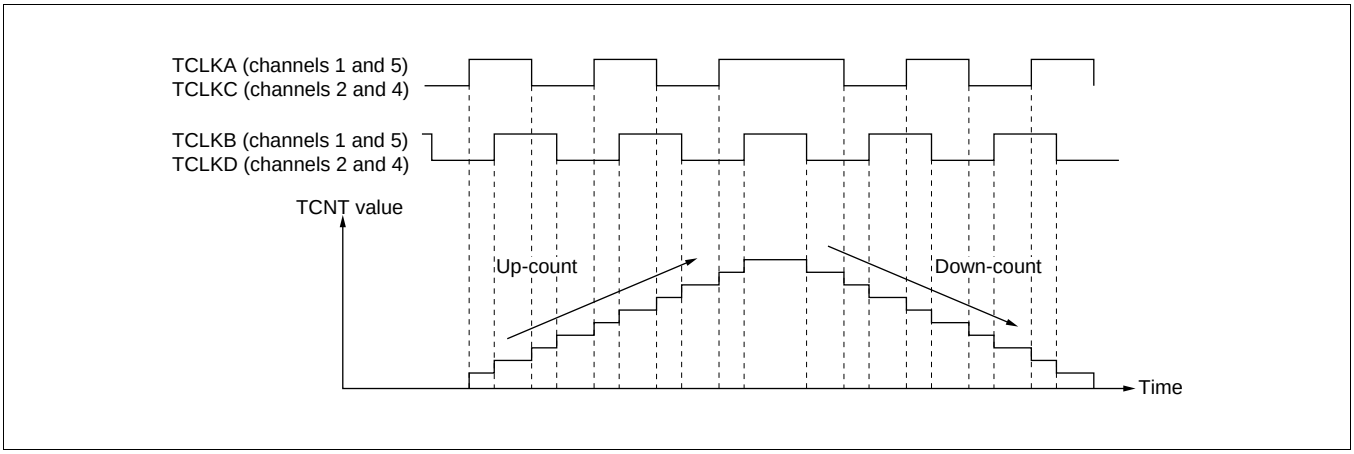

Figure 10-29 Example of Phase Counting Mode 1 Operation

Table 10-9 Up/Down-Count Conditions in Phase Counting Mode 1

TCLKA (Channels 1 and 5) TCLKC (Channels 2 and 4)	TCLKB (Channels 1 and 5) TCLKD (Channels 2 and 4)	Operation
High level	↑	Up-count
Low level	↓	
↑	Low level	
↓	High level	
High level	↓	Down-count
Low level	↑	
↑	High level	
↓	Low level	

Legend:
↑ : Rising edge
↓ : Falling edge

- Phase counting mode 2

  Figure 10-30 shows an example of phase counting mode 2 operation, and table 10-10 summarizes the TCNT up/down-count conditions.

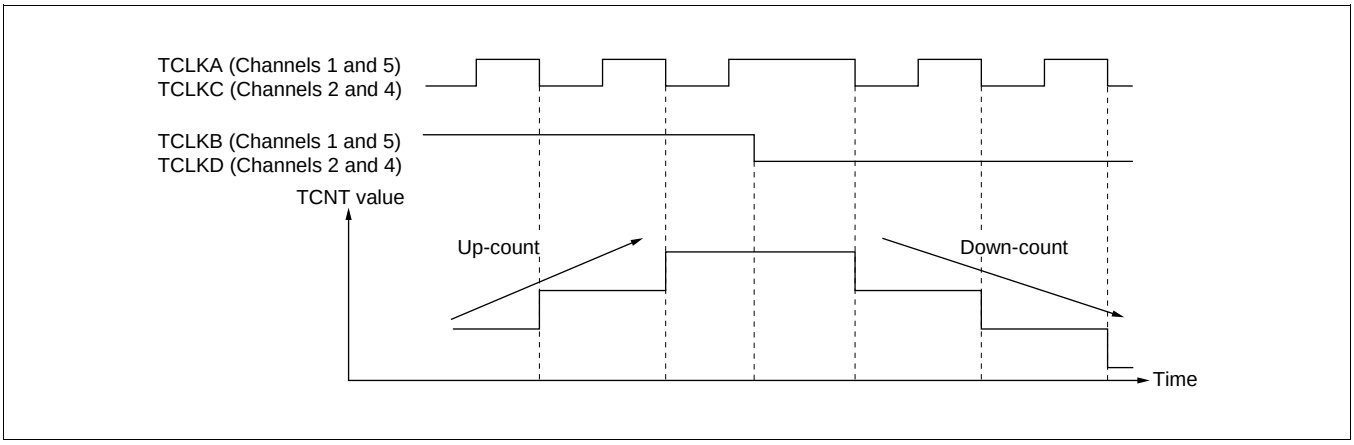

Figure 10-30 Example of Phase Counting Mode 2 Operation

Table 10-10 Up/Down-Count Conditions in Phase Counting Mode 2

TCLKA (Channels 1 and 5) TCLKC (Channels 2 and 4)	TCLKB (Channels 1 and 5) TCLKD (Channels 2 and 4)	Operation
High level	↑	Don't care
Low level	↓	Don't care
↑	Low level	Don't care
↓	High level	Up-count
High level	↓	Don't care
Low level	↑	Don't care
↑	High level	Don't care
↓	Low level	Down-count

Legend:

↑ : Rising edge

↓ : Falling edge

- Phase counting mode 3

  Figure 10-31 shows an example of phase counting mode 3 operation, and table 10-11 summarizes the TCNT up/down-count conditions.

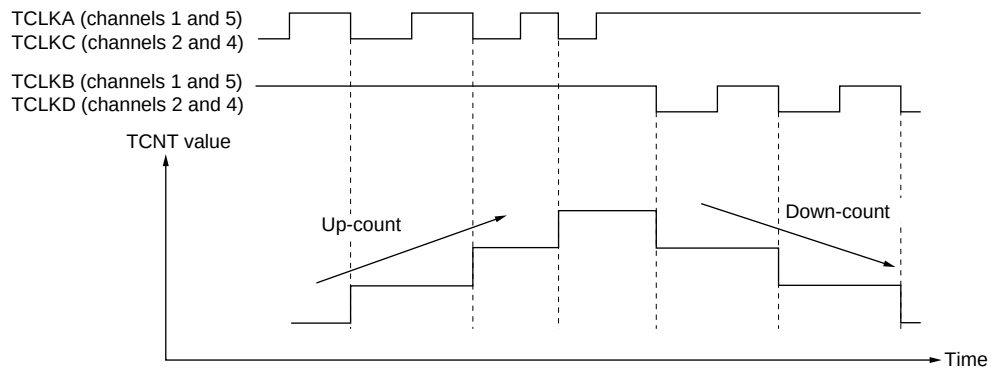

Figure 10-31 Example of Phase Counting Mode 3 Operation

Table 10-11 Up/Down-Count Conditions in Phase Counting Mode 3

TCLKA (Channels 1 and 5) TCLKC (Channels 2 and 4)	TCLKB (Channels 1 and 5) TCLKD (Channels 2 and 4)	Operation
High level	↑	Don't care
Low level	↓	Don't care
↑	Low level	Don't care
↓	High level	Up-count
High level	↓	Down-count
Low level	↑	Don't care
↑	High level	Don't care
↓	Low level	Don't care

Legend:
↑ : Rising edge
↓ : Falling edge

- Phase counting mode 4

  Figure 10-32 shows an example of phase counting mode 4 operation, and table 10-12 summarizes the TCNT up/down-count conditions.

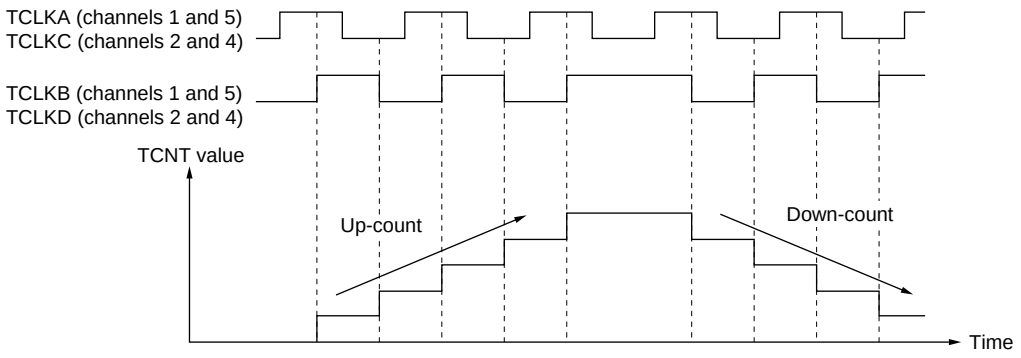

Figure 10-32 Example of Phase Counting Mode 4 Operation

Table 10-12 Up/Down-Count Conditions in Phase Counting Mode 4

TCLKA (Channels 1 and 5) TCLKC (Channels 2 and 4)	TCLKB (Channels 1 and 5) TCLKD (Channels 2 and 4)	Operation
High level	↑	Up-count
Low level	↓	
↑	Low level	Don't care
↓	High level	
High level	↓	Down-count
Low level	↑	
↑	High level	Don't care
↓	Low level	

Legend:

↑ : Rising edge

↓ : Falling edge

Phase Counting Mode Application Example: Figure 10-33 shows an example in which phase counting mode is designated for channel 1, and channel 1 is coupled with channel 0 to input servo motor 2-phase encoder pulses in order to detect the position or speed.

Channel 1 is set to phase counting mode 1, and the encoder pulse A-phase and B-phase are input to TCLKA and TCLKB.

Channel 0 operates with TCNT counter clearing by TGR0C compare match; TGR0A and TGR0C are used for the compare match function, and are set with the speed control period and position control period. TGR0B is used for input capture, with TGR0B and TGR0D operating in buffer mode. The channel 1 counter input clock is designated as the TGR0B input capture source, and detection of the pulse width of 2-phase encoder 4-multiplication pulses is performed.

TGR1A and TGR1B for channel 1 are designated for input capture, channel 0 TGR0A and TGR0C compare matches are selected as the input capture source, and store the up/down-counter values for the control periods.

This procedure enables accurate position/speed detection to be achieved.

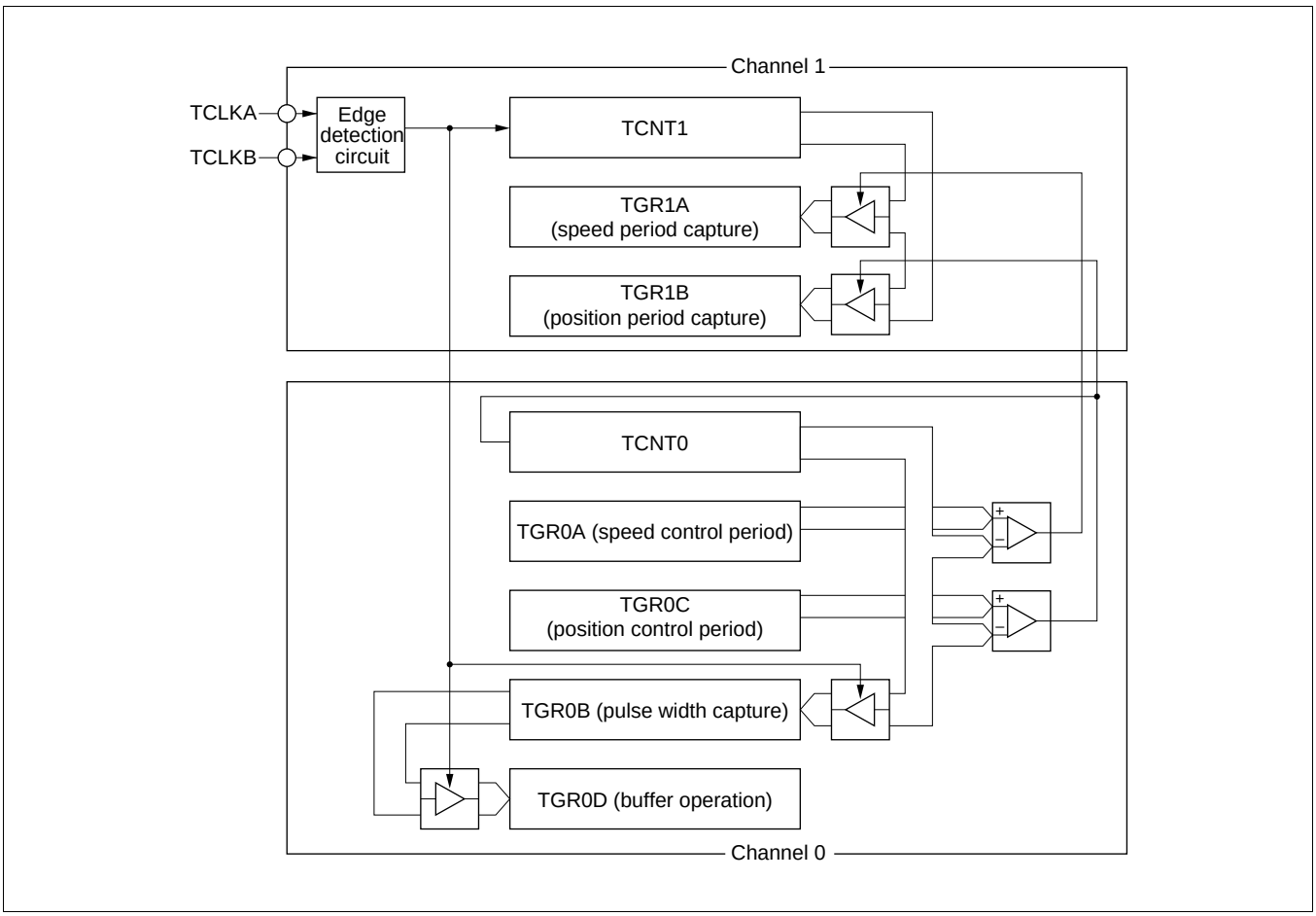

Figure 10-33 Phase Counting Mode Application Example

10.5 Interrupts

10.5.1 Interrupt Sources and Priorities

There are three kinds of TPU interrupt source: TGR input capture/compare match, TCNT overflow, and TCNT underflow. Each interrupt source has its own status flag and enable/disabled bit, allowing generation of interrupt request signals to be enabled or disabled individually.

When an interrupt request is generated, the corresponding status flag in TSR is set to 1. If the corresponding enable/disable bit in TIER is set to 1 at this time, an interrupt is requested. The interrupt request is cleared by clearing the status flag to 0.

Relative channel priorities can be changed by the interrupt controller, but the priority order within a channel is fixed. For details, see section 5, Interrupt Controller.

Table 10-13 lists the TPU interrupt sources.

Table 10-13 TPU Interrupts

Channel	Interrupt Source	Description	DMAC Activation	DTC Activation	Priority
0	TGI0A	TGR0A input capture/compare match	Possible	Possible	High
	TGI0B	TGR0B input capture/compare match	Not possible	Possible	
	TGI0C	TGR0C input capture/compare match	Not possible	Possible	
	TGI0D	TGR0D input capture/compare match	Not possible	Possible	
	TCI0V	TCNT0 overflow	Not possible	Not possible	
1	TGI1A	TGR1A input capture/compare match	Possible	Possible	
	TGI1B	TGR1B input capture/compare match	Not possible	Possible	
	TCI1V	TCNT1 overflow	Not possible	Not possible	
	TCI1U	TCNT1 underflow	Not possible	Not possible	
2	TGI2A	TGR2A input capture/compare match	Possible	Possible	
	TGI2B	TGR2B input capture/compare match	Not possible	Possible	
	TCI2V	TCNT2 overflow	Not possible	Not possible	
	TCI2U	TCNT2 underflow	Not possible	Not possible	
3	TGI3A	TGR3A input capture/compare match	Possible	Possible	
	TGI3B	TGR3B input capture/compare match	Not possible	Possible	
	TGI3C	TGR3C input capture/compare match	Not possible	Possible	
	TGI3D	TGR3D input capture/compare match	Not possible	Possible	
	TCI3V	TCNT3 overflow	Not possible	Not possible	
4	TGI4A	TGR4A input capture/compare match	Possible	Possible	
	TGI4B	TGR4B input capture/compare match	Not possible	Possible	
	TCI4V	TCNT4 overflow	Not possible	Not possible	
	TCI4U	TCNT4 underflow	Not possible	Not possible	
5	TGI5A	TGR5A input capture/compare match	Possible	Possible	
	TGI5B	TGR5B input capture/compare match	Not possible	Possible	
	TCI5V	TCNT5 overflow	Not possible	Not possible	
	TCI5U	TCNT5 underflow	Not possible	Not possible	Low

Note: This table shows the initial state immediately after a reset. The relative channel priorities can be changed by the interrupt controller.

Input Capture/Compare Match Interrupt: An interrupt is requested if the TGIE bit in TIER is set to 1 when the TGF flag in TSR is set to 1 by the occurrence of a TGR input capture/compare match on a particular channel. The interrupt request is cleared by clearing the TGF flag to 0. The TPU has 16 input capture/compare match interrupts, four each for channels 0 and 3, and two each for channels 1, 2, 4, and 5.

Overflow Interrupt: An interrupt is requested if the TCIEV bit in TIER is set to 1 when the TCFV flag in TSR is set to 1 by the occurrence of TCNT overflow on a channel. The interrupt request is cleared by clearing the TCFV flag to 0. The TPU has six overflow interrupts, one for each channel.

Underflow Interrupt: An interrupt is requested if the TCIEU bit in TIER is set to 1 when the TCFU flag in TSR is set to 1 by the occurrence of TCNT underflow on a channel. The interrupt request is cleared by clearing the TCFU flag to 0. The TPU has four underflow interrupts, one each for channels 1, 2, 4, and 5.

10.5.2 DTC/DMAC Activation

DTC Activation: The DTC can be activated by the TGR input capture/compare match interrupt for a channel. For details, see section 8, Data Transfer Controller.

A total of 16 TPU input capture/compare match interrupts can be used as DTC activation sources, four each for channels 0 and 3, and two each for channels 1, 2, 4, and 5.

DMAC Activation: The DMAC can be activated by the TGRA input capture/compare match interrupt for a channel. For details, see section 7, DMA Controller.

In the TPU, a total of six TGRA input capture/compare match interrupts can be used as DMAC activation sources, one for each channel.

10.5.3 A/D Converter Activation

The A/D converter can be activated by the TGRA input capture/compare match for a channel.

If the TTGE bit in TIER is set to 1 when the TGFA flag in TSR is set to 1 by the occurrence of a TGRA input capture/compare match on a particular channel, a request to start A/D conversion is sent to the A/D converter. If the TPU conversion start trigger has been selected on the A/D converter side at this time, A/D conversion is started.

In the TPU, a total of six TGRA input capture/compare match interrupts can be used as A/D converter conversion start sources, one for each channel.

10.6 Operation Timing

10.6.1 Input/Output Timing

TCNT Count Timing: Figure 10-34 shows TCNT count timing in internal clock operation, and figure 10-35 shows TCNT count timing in external clock operation.

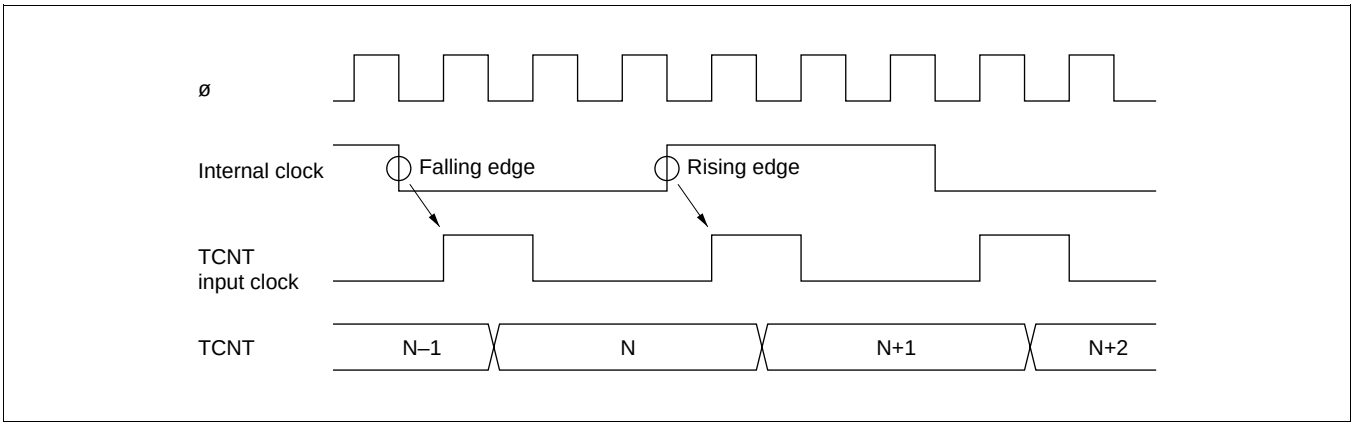

Figure 10-34 Count Timing in Internal Clock Operation

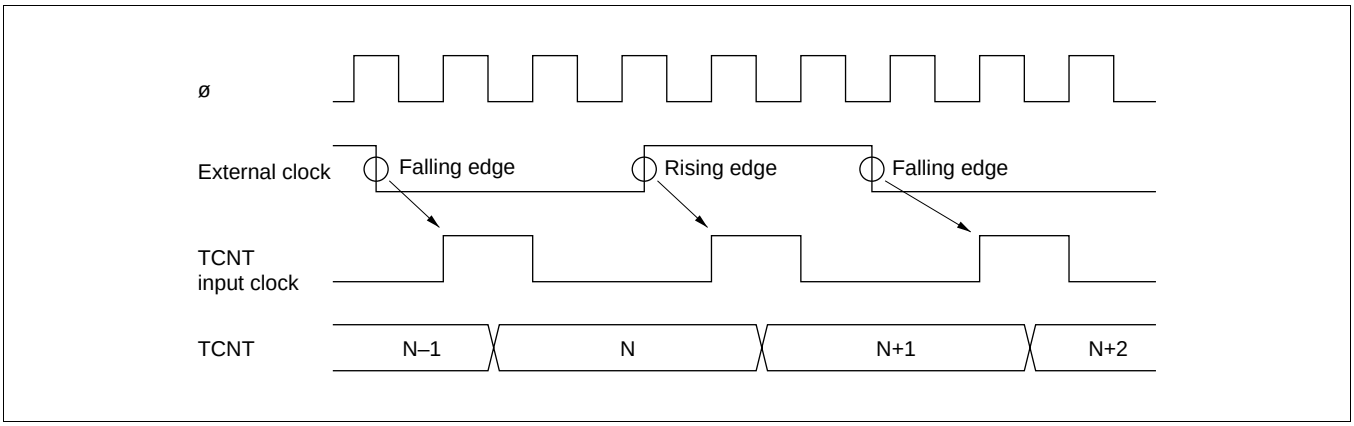

Figure 10-35 Count Timing in External Clock Operation

Output Compare Output Timing: A compare match signal is generated in the final state in which TCNT and TGR match (the point at which the count value matched by TCNT is updated). When a compare match signal is generated, the output value set in TIOR is output at the output compare output pin. After a match between TCNT and TGR, the compare match signal is not generated until the TCNT input clock is generated.

Figure 10-36 shows output compare output timing.

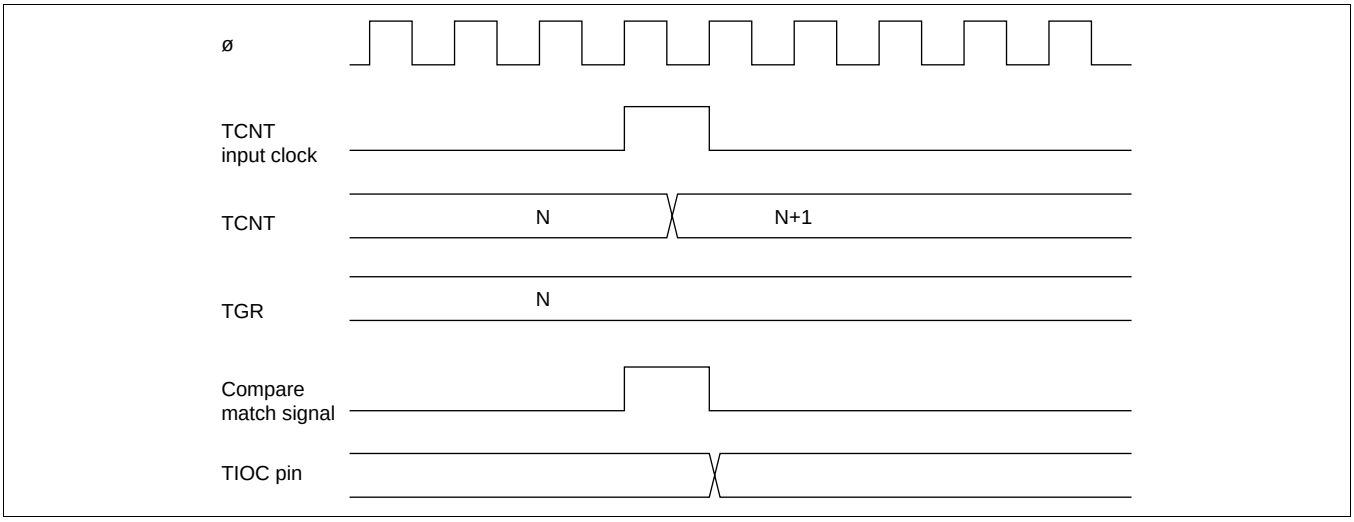

Figure 10-36 Output Compare Output Timing

Input Capture Signal Timing: Figure 10-37 shows input capture signal timing.

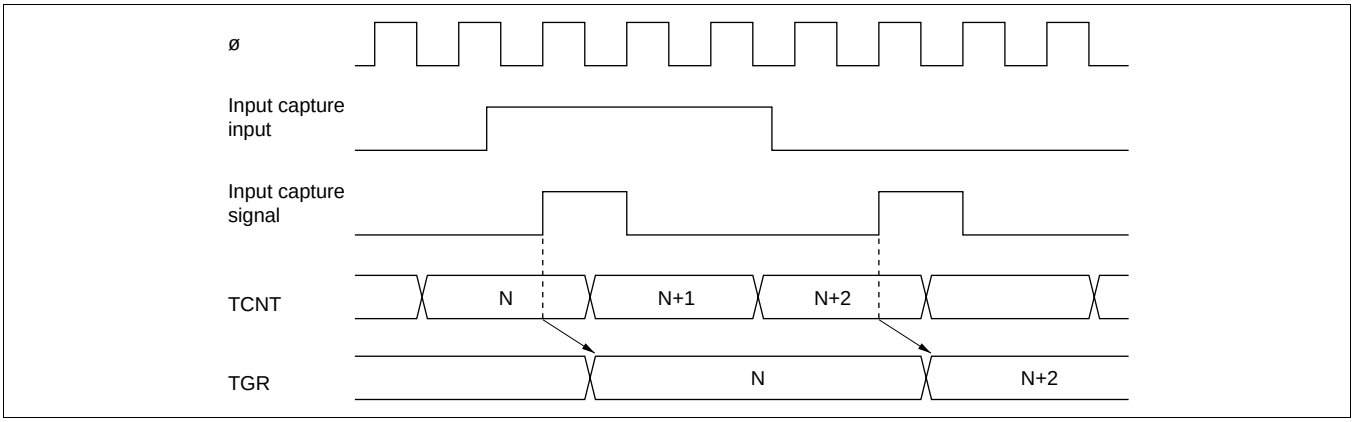

Figure 10-37 Input Capture Input Signal Timing

Timing for Counter Clearing by Compare Match/Input Capture: Figure 10-38 shows the timing when counter clearing by compare match occurrence is specified, and figure 10-39 shows the timing when counter clearing by input capture occurrence is specified.

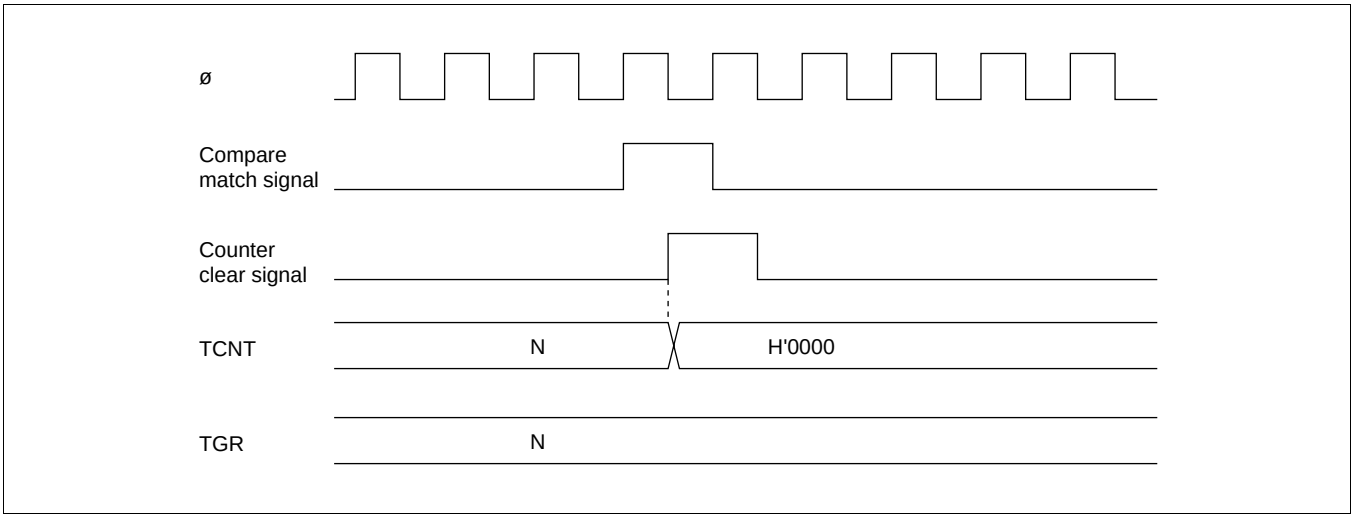

Figure 10-38 Counter Clear Timing (Compare Match)

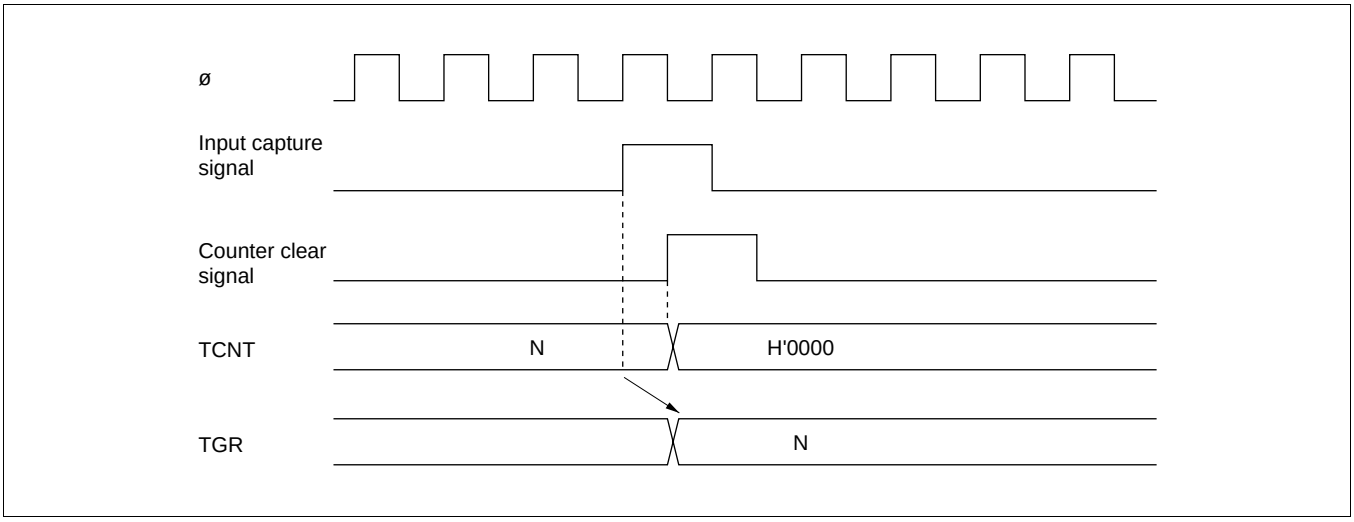

Figure 10-39 Counter Clear Timing (Input Capture)

Buffer Operation Timing: Figures 10-40 and 10-41 show the timing in buffer operation.

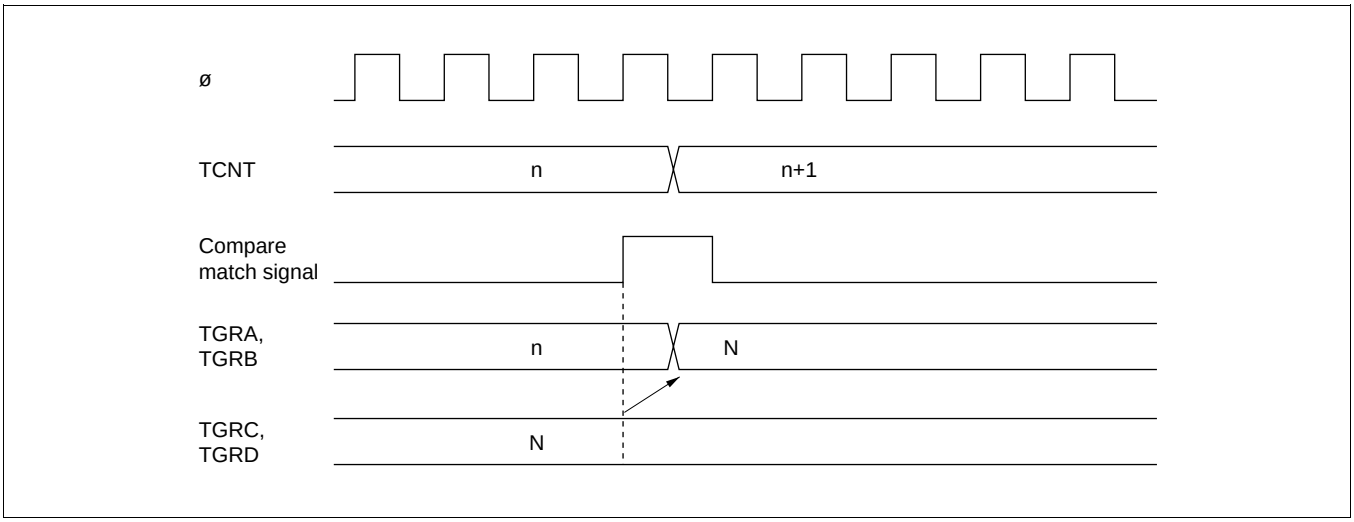

Figure 10-40 Buffer Operation Timing (Compare Match)

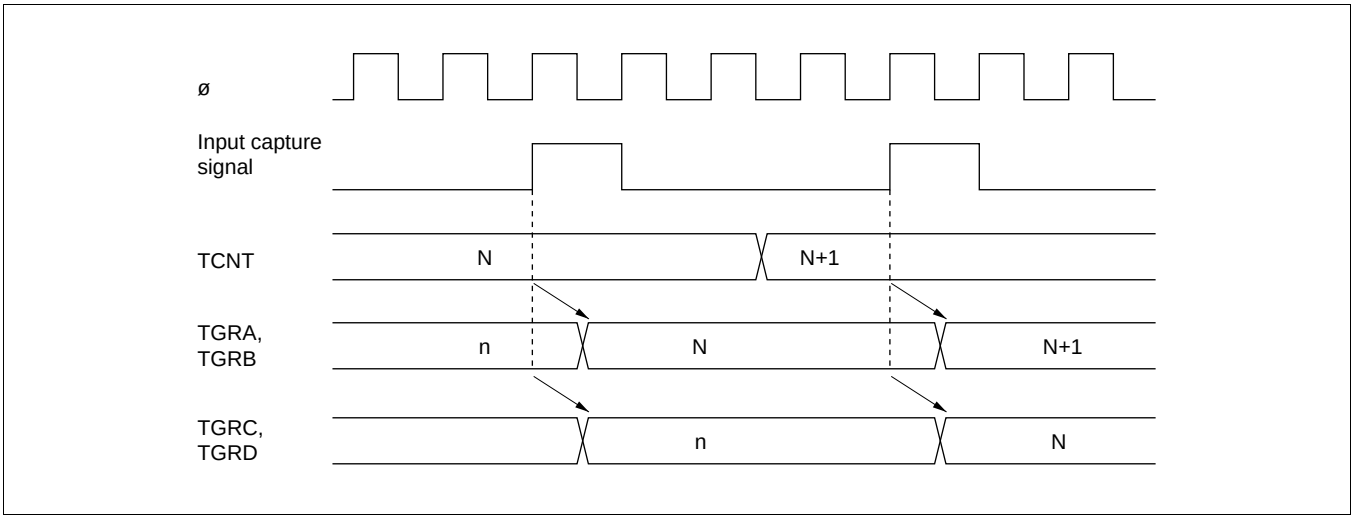

Figure 10-41 Buffer Operation Timing (Input Capture)

10.6.2 Interrupt Signal Timing

TGF Flag Setting Timing in Case of Compare Match: Figure 10-42 shows the timing for setting of the TGF flag in TSR by compare match occurrence, and TGI interrupt request signal timing.

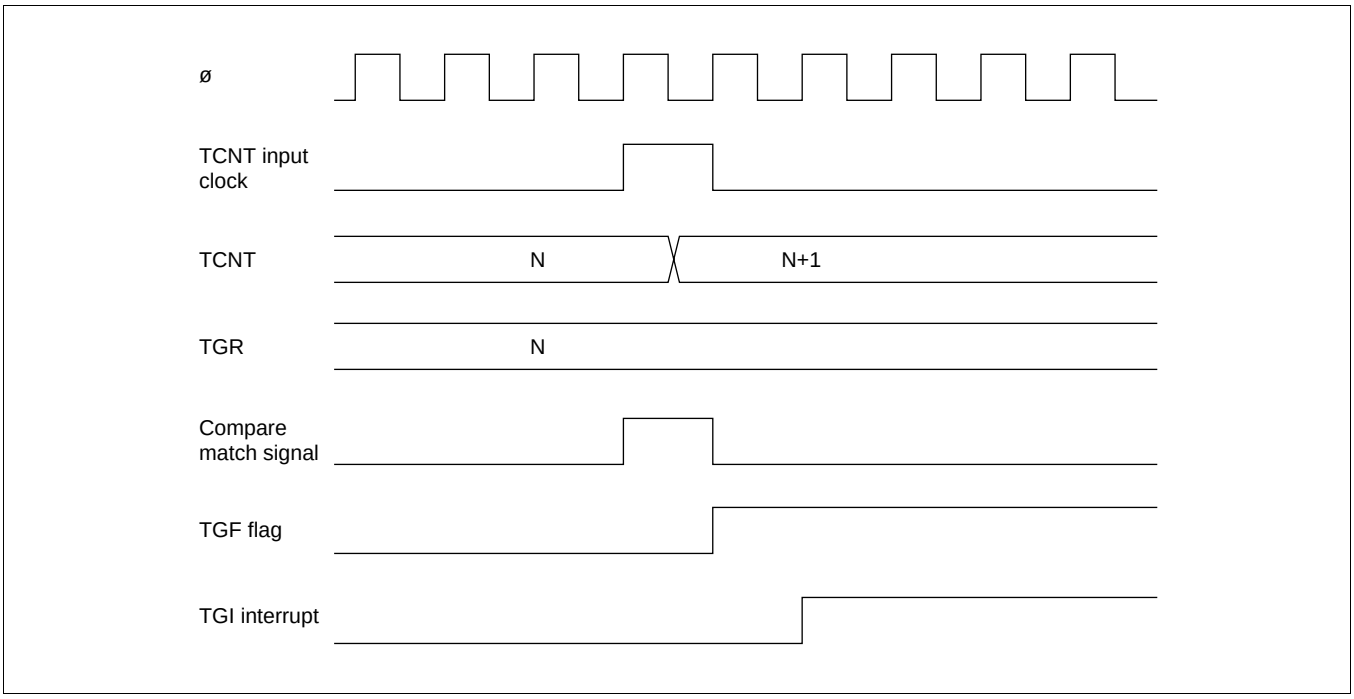

Figure 10-42 TGI Interrupt Timing (Compare Match)

TGF Flag Setting Timing in Case of Input Capture: Figure 10-43 shows the timing for setting of the TGF flag in TSR by input capture occurrence, and TGI interrupt request signal timing.

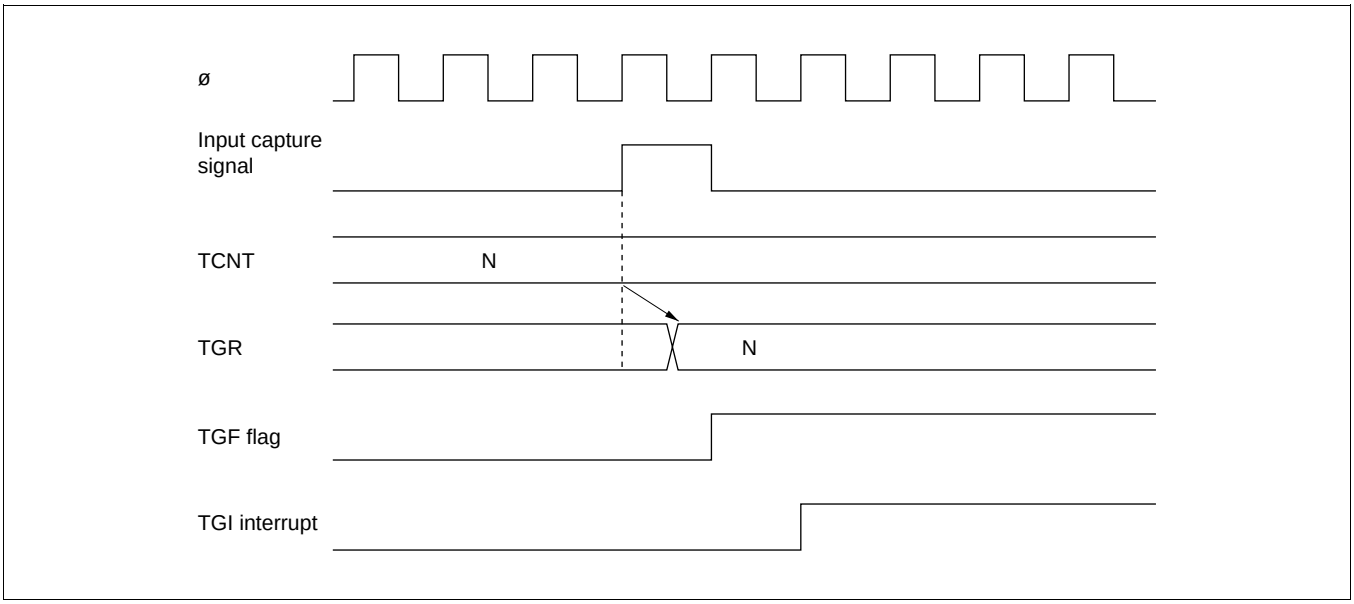

Figure 10-43 TGI Interrupt Timing (Input Capture)

TCFV Flag/TCFU Flag Setting Timing: Figure 10-44 shows the timing for setting of the TCFV flag in TSR by overflow occurrence, and TCIV interrupt request signal timing.

Figure 10-45 shows the timing for setting of the TCFU flag in TSR by underflow occurrence, and TCIU interrupt request signal timing.

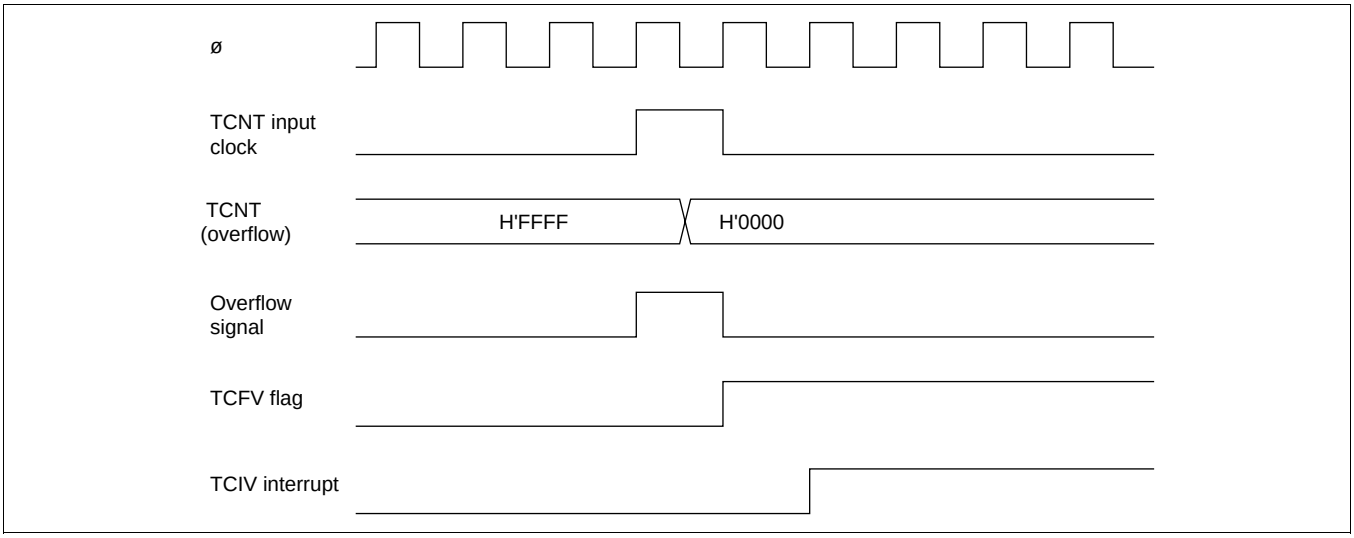

Figure 10-44 TCIV Interrupt Setting Timing

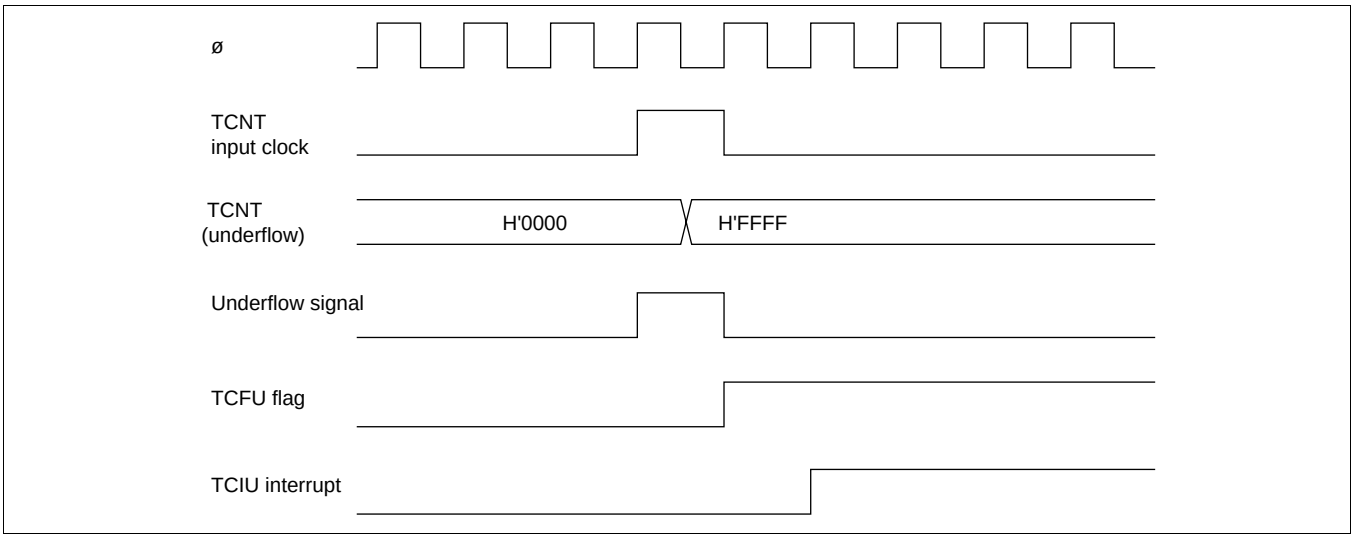

Figure 10-45 TCIU Interrupt Setting Timing

Status Flag Clearing Timing: After a status flag is read as 1 by the CPU, it is cleared by writing 0 to it. When the DTC or DMAC is activated, the flag is cleared automatically. Figure 10-46 shows the timing for status flag clearing by the CPU, and figure 10-47 shows the timing for status flag clearing by the DTC or DMAC.

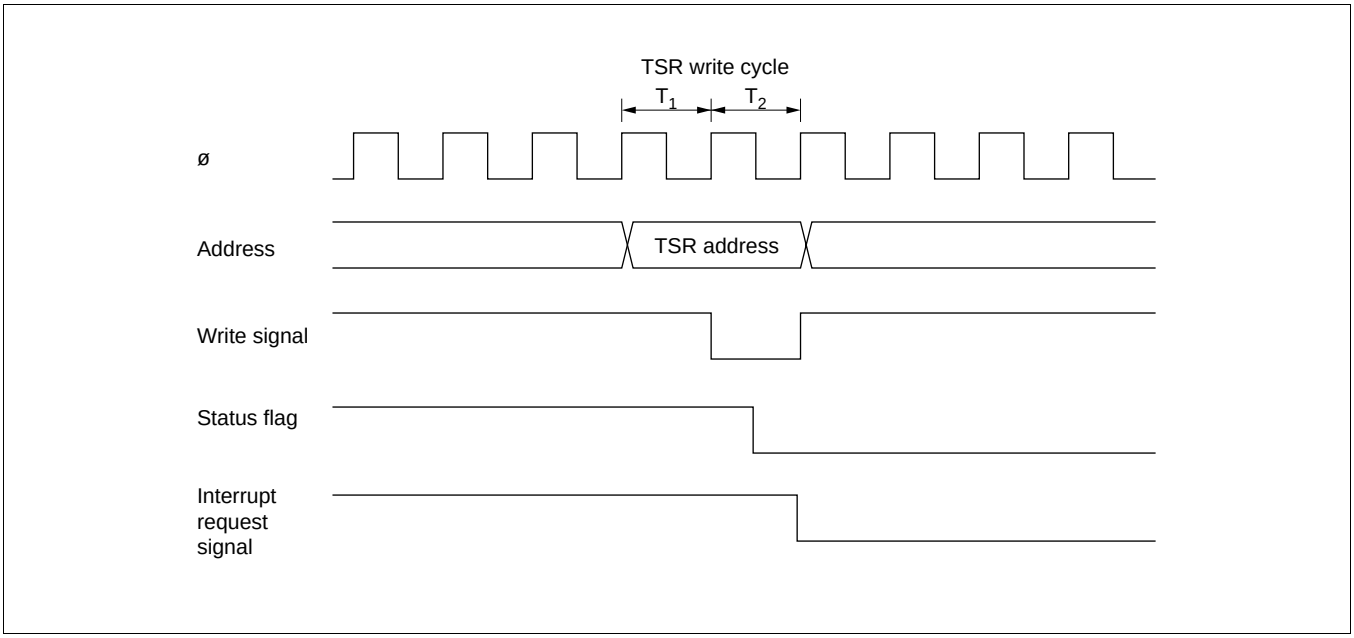

Figure 10-46 Timing for Status Flag Clearing by CPU

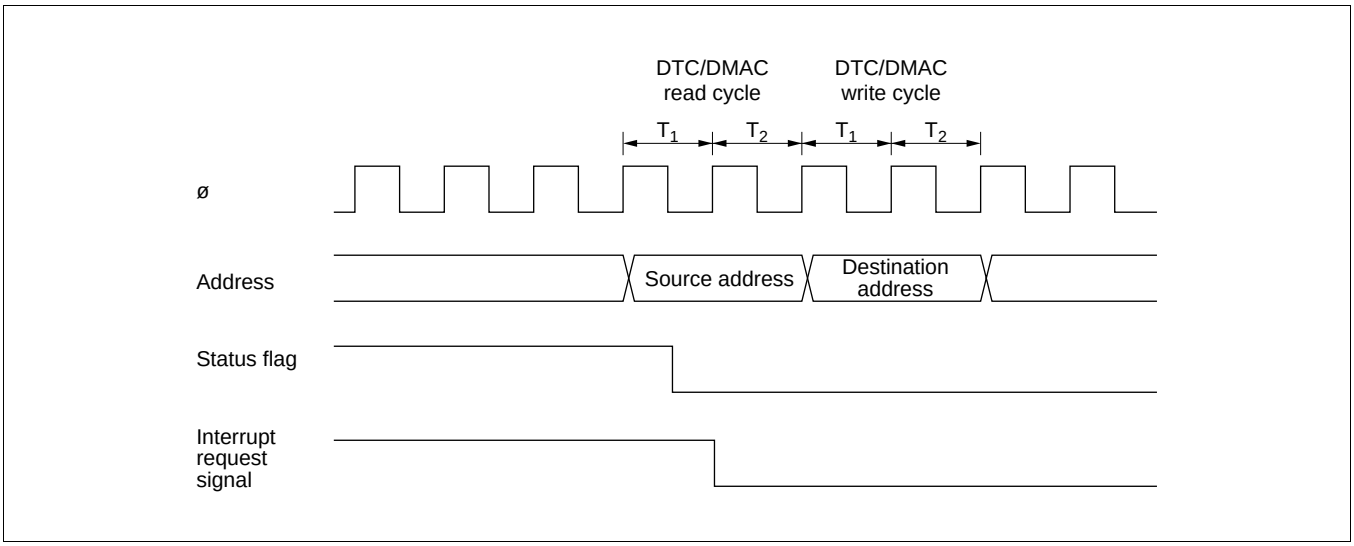

Figure 10-47 Timing for Status Flag Clearing by DTC/DMAC Activation

10.7 Usage Notes

Note that the kinds of operation and contention described below occur during TPU operation.

Input Clock Restrictions: The input clock pulse width must be at least 1.5 states in the case of single-edge detection, and at least 2.5 states in the case of both-edge detection. The TPU will not operate properly with a narrower pulse width.

In phase counting mode, the phase difference and overlap between the two input clocks must be at least 1.5 states, and the pulse width must be at least 2.5 states. Figure 10-48 shows the input clock conditions in phase counting mode.

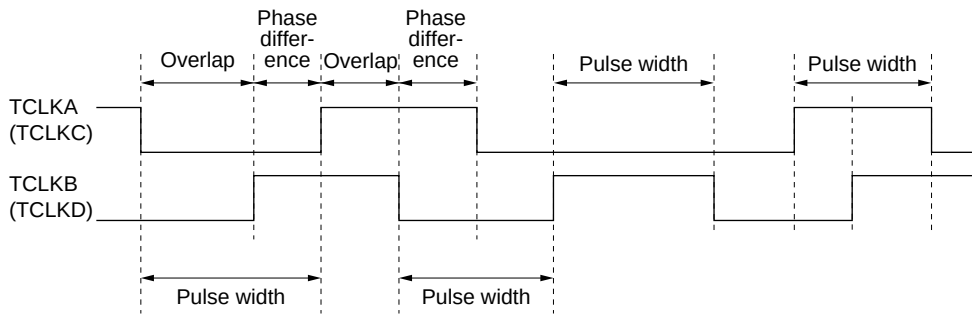

Notes: Phase difference and overlap: 1.5 states or more
Pulse width : 2.5 states or more

Figure 10-48 Phase Difference, Overlap, and Pulse Width in Phase Counting Mode

Caution on Period Setting: When counter clearing by compare match is set, TCNT is cleared in the final state in which it matches the TGR value (the point at which the count value matched by TCNT is updated). Consequently, the actual counter frequency is given by the following formula:

$$f = \frac{ø}{(N + 1)}$$

Where f : Counter frequency
ø : Operating frequency
N : TGR set value

Contention between TCNT Write and Clear Operations: If the counter clear signal is generated in the T_2 state of a TCNT write cycle, TCNT clearing takes precedence and the TCNT write is not performed.

Figure 10-49 shows the timing in this case.

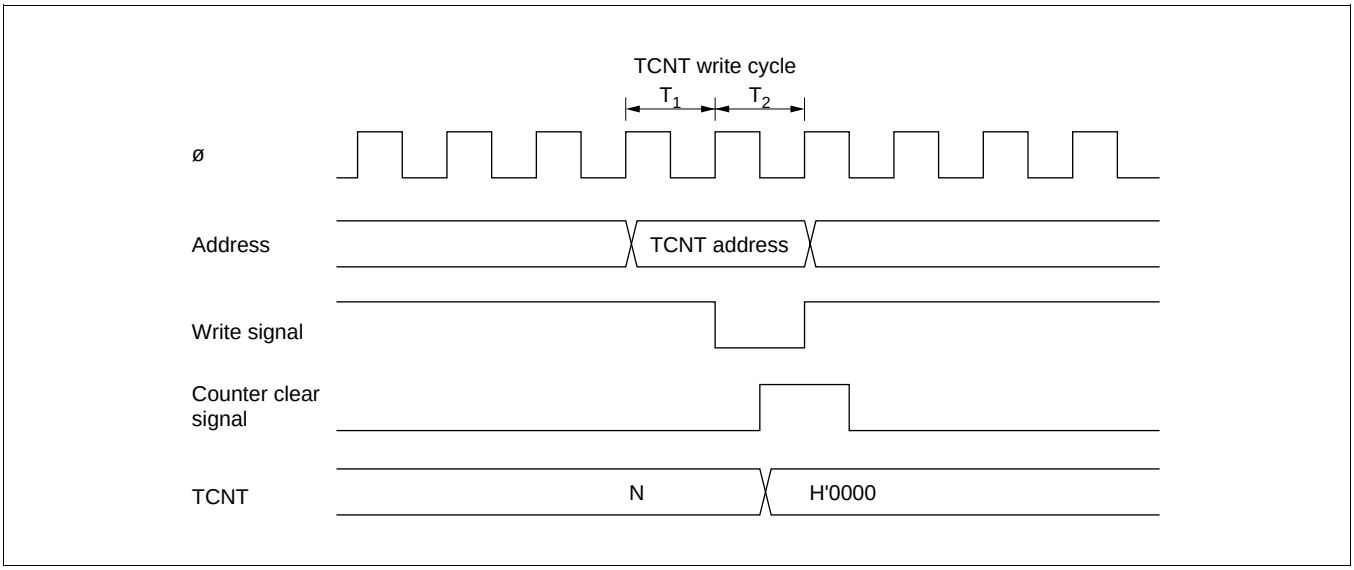

Figure 10-49 Contention between TCNT Write and Clear Operations

Contention between TCNT Write and Increment Operations: If incrementing occurs in the T_2 state of a TCNT write cycle, the TCNT write takes precedence and TCNT is not incremented.

Figure 10-50 shows the timing in this case.

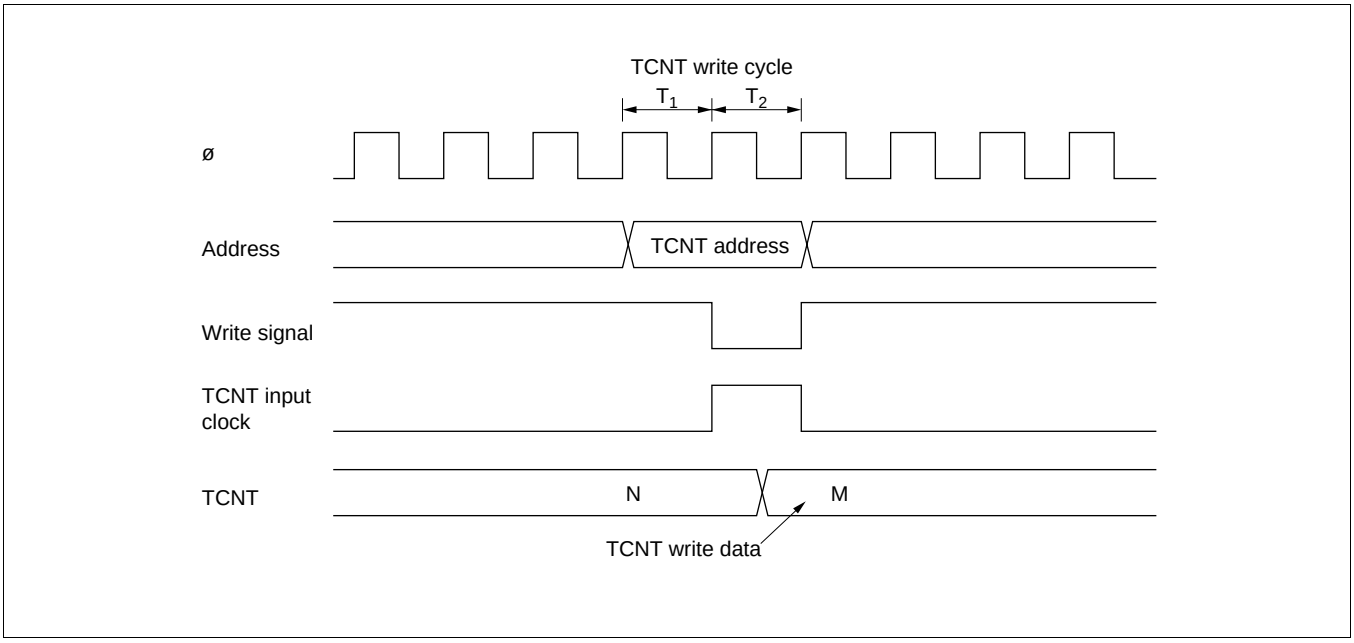

Figure 10-50 Contention between TCNT Write and Increment Operations

Contention between TGR Write and Compare Match: If a compare match occurs in the T_2 state of a TGR write cycle, the TGR write takes precedence and the compare match signal is inhibited. A compare match does not occur even if the same value as before is written.

Figure 10-51 shows the timing in this case.

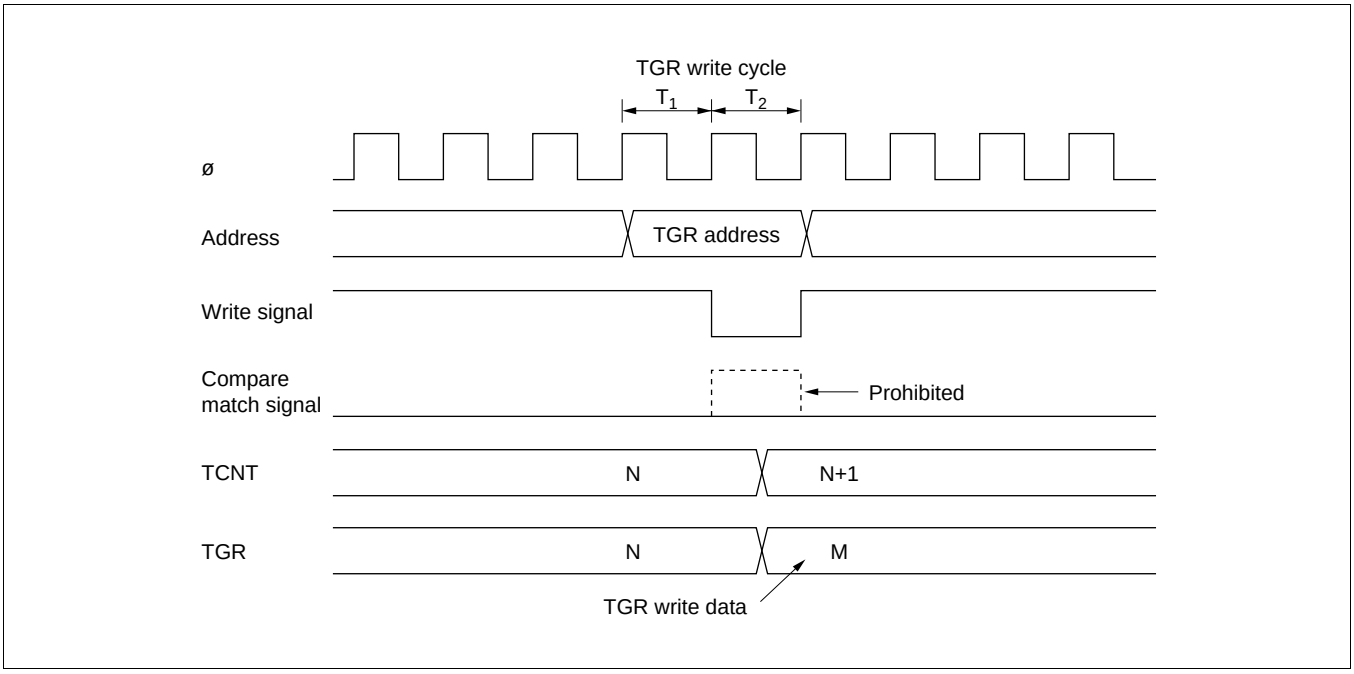

Figure 10-51 Contention between TGR Write and Compare Match

Contention between Buffer Register Write and Compare Match: If a compare match occurs in the T_2 state of a TGR write cycle, the data transferred to TGR by the buffer operation will be the data prior to the write.

Figure 10-52 shows the timing in this case.

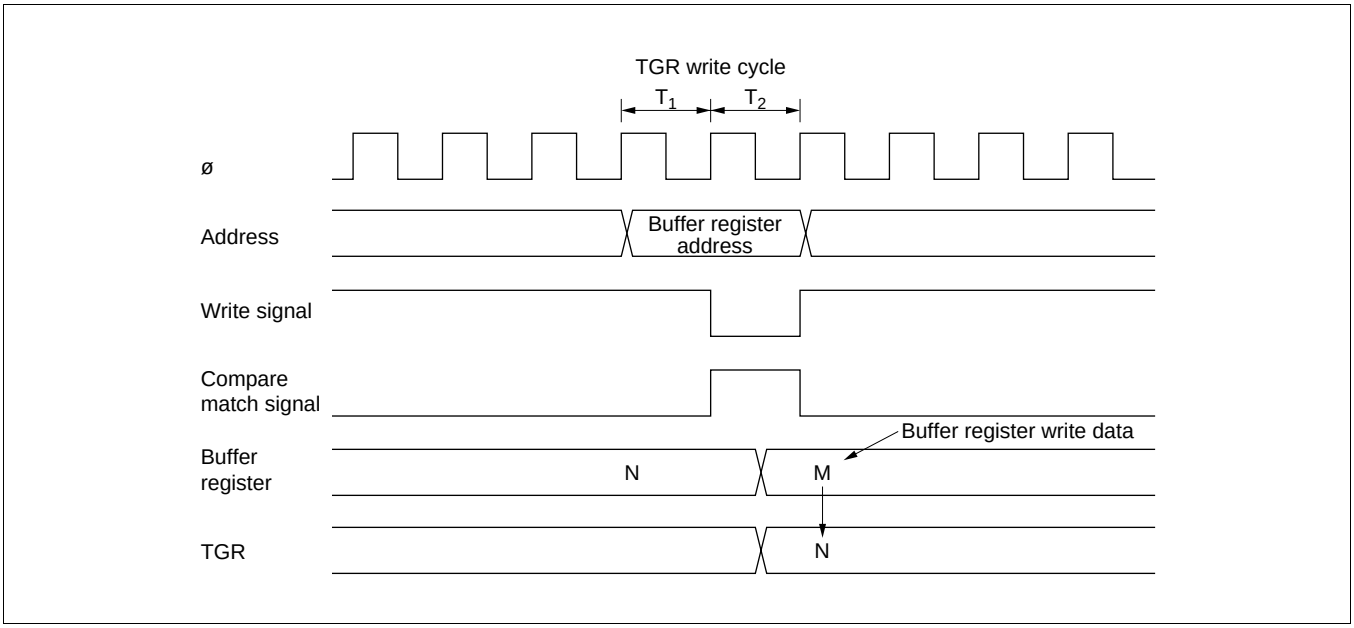

Figure 10-52 Contention between Buffer Register Write and Compare Match

Contention between TGR Read and Input Capture: If the input capture signal is generated in the T_1 state of a TGR read cycle, the data that is read will be the data after input capture transfer.

Figure 10-53 shows the timing in this case.

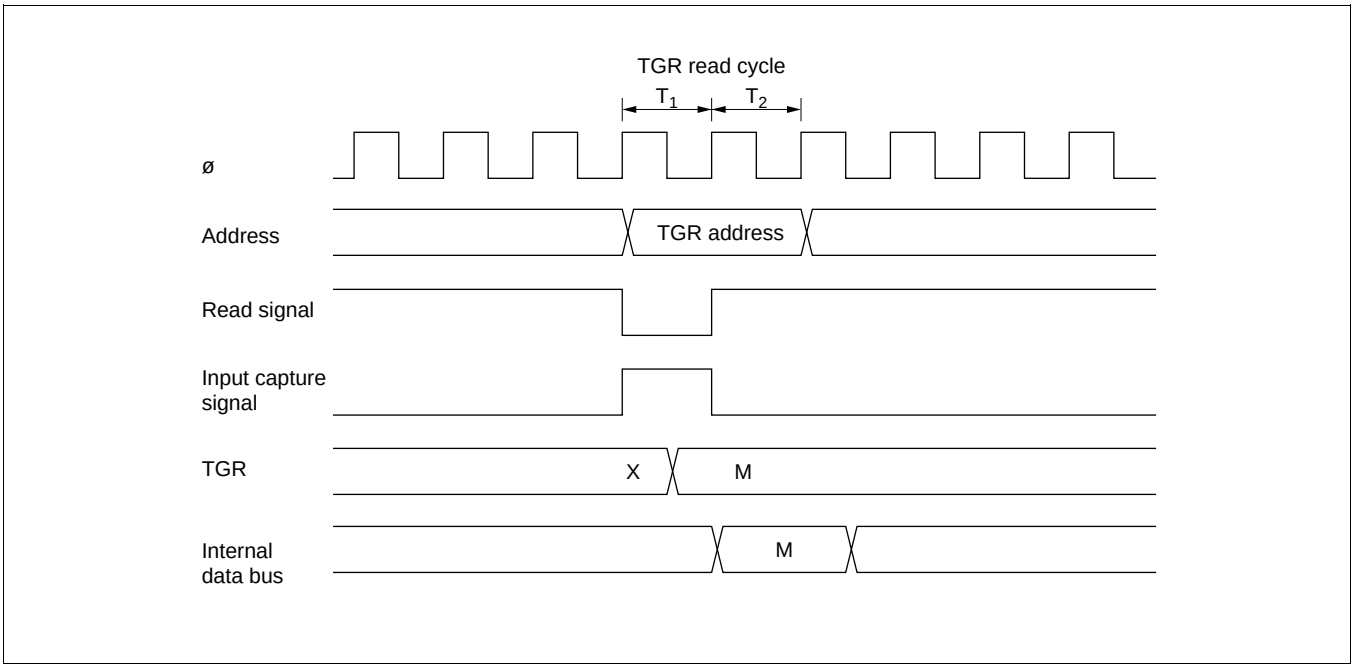

Figure 10-53 Contention between TGR Read and Input Capture

Contention between TGR Write and Input Capture: If the input capture signal is generated in the T_2 state of a TGR write cycle, the input capture operation takes precedence and the write to TGR is not performed.

Figure 10-54 shows the timing in this case.

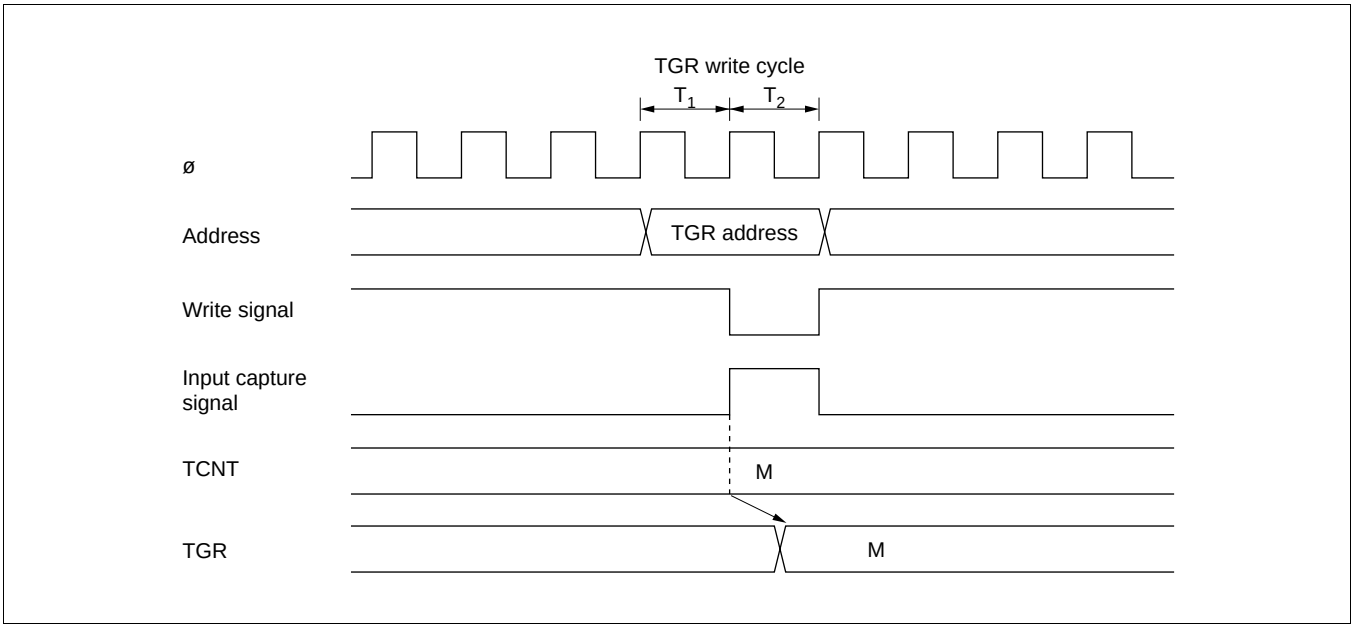

Figure 10-54 Contention between TGR Write and Input Capture

Contention between Buffer Register Write and Input Capture: If the input capture signal is generated in the T_2 state of a buffer write cycle, the buffer operation takes precedence and the write to the buffer register is not performed.

Figure 10-55 shows the timing in this case.

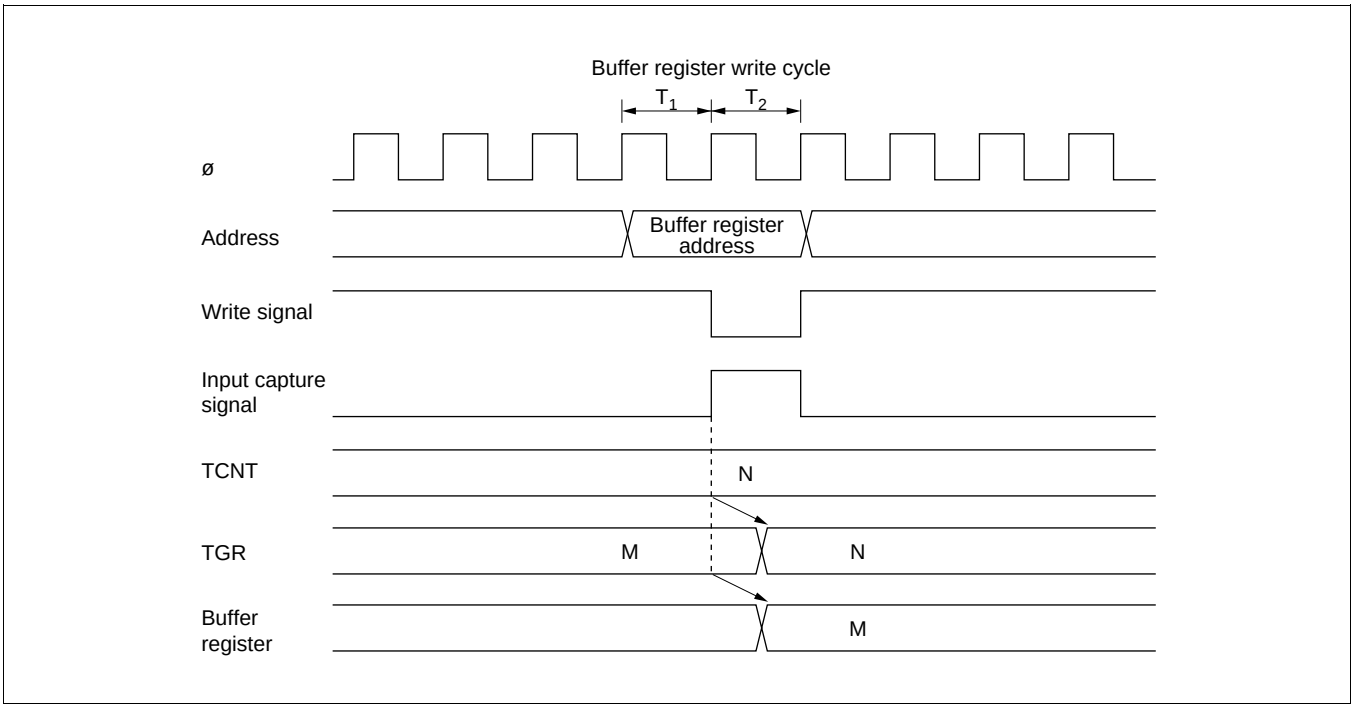

Figure 10-55 Contention between Buffer Register Write and Input Capture

Contention between Overflow/Underflow and Counter Clearing: If overflow/underflow and counter clearing occur simultaneously, the TCFV/TCFU flag in TSR is not set and TCNT clearing takes precedence.

Figure 10-56 shows the operation timing when a TGR compare match is specified as the clearing source, and H'FFFF is set in TGR.

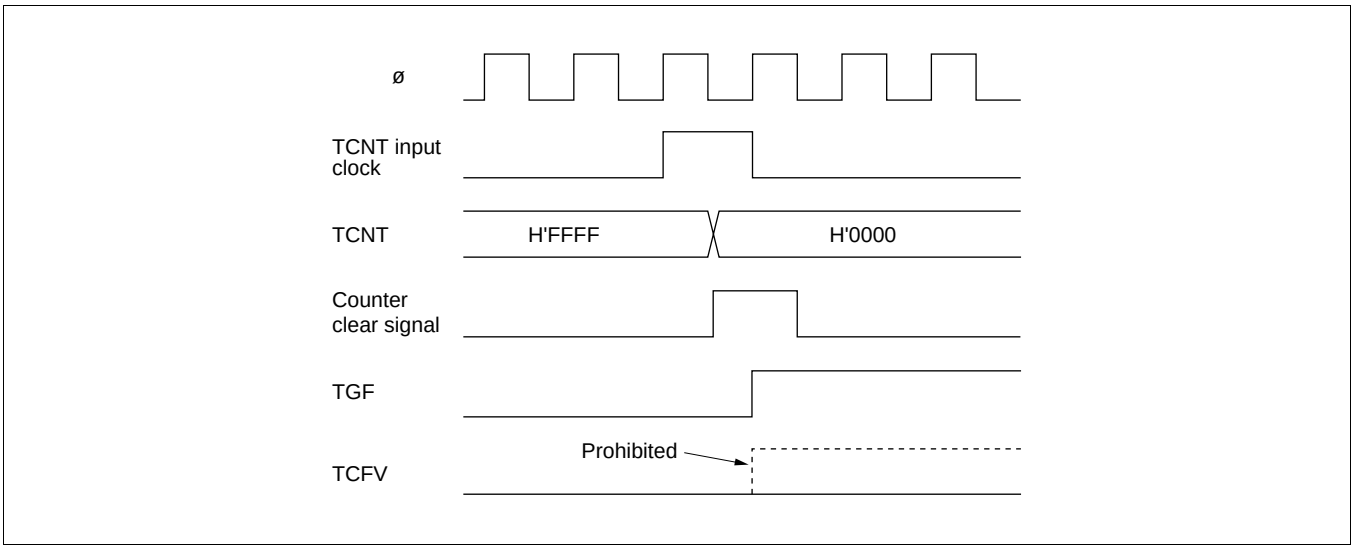

Figure 10-56 Contention between Overflow and Counter Clearing

Contention between TCNT Write and Overflow/Underflow: If there is an up-count or down-count in the T_2 state of a TCNT write cycle, and overflow/underflow occurs, the TCNT write takes precedence and the TCFV/TCFU flag in TSR is not set.

Figure 10-57 shows the operation timing when there is contention between TCNT write and overflow.

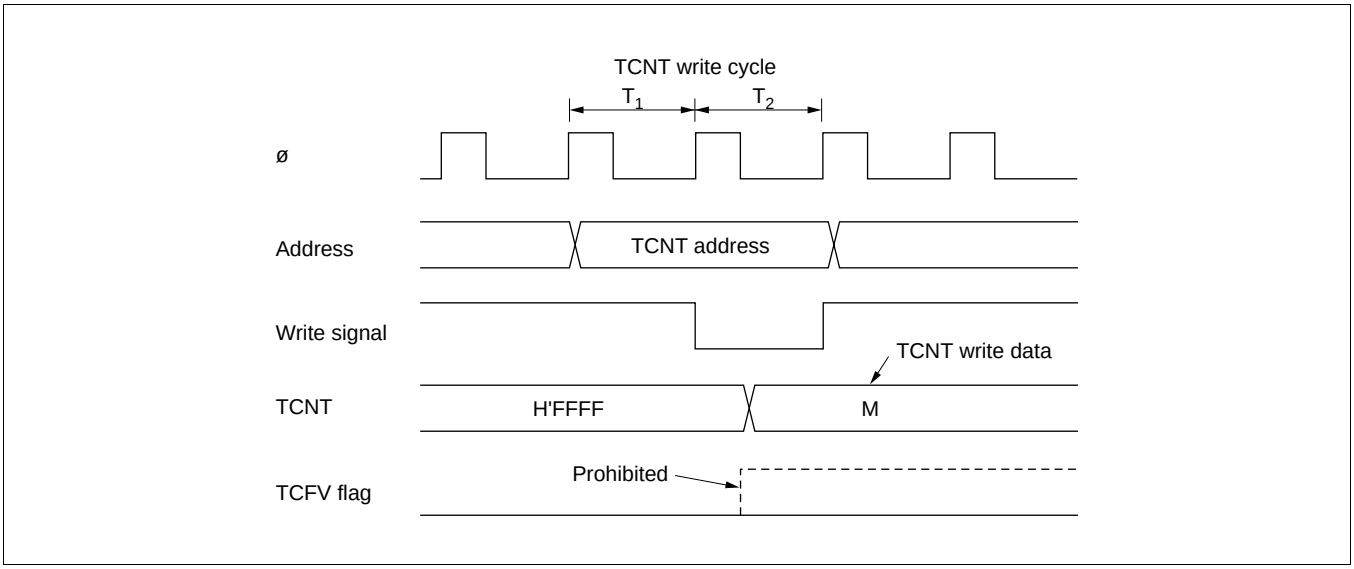

Figure 10-57 Contention between TCNT Write and Overflow

Multiplexing of I/O Pins: In the H8S/2357 Group, the TCLKA input pin is multiplexed with the TIOCC0 I/O pin, the TCLKB input pin with the TIOCD0 I/O pin, the TCLKC input pin with the TIOCB1 I/O pin, and the TCLKD input pin with the TIOCB2 I/O pin. When an external clock is input, compare match output should not be performed from a multiplexed pin.

Interrupts and Module Stop Mode: If module stop mode is entered when an interrupt has been requested, it will not be possible to clear the CPU interrupt source or the DMAC or DTC activation source. Interrupts should therefore be disabled before entering module stop mode.

Section 11 Programmable Pulse Generator (PPG)

11.1 Overview

The H8S/2357 Group has a on-chip programmable pulse generator (PPG) that provides pulse outputs by using the 16-bit timer-pulse unit (TPU) as a time base. The PPG pulse outputs are divided into 4-bit groups (group 3 to group 0) that can operate both simultaneously and independently.

11.1.1 Features

PPG features are listed below.

- 16-bit output data
  — Maximum 16-bit data can be output, and output can be enabled on a bit-by-bit basis
- Four output groups
  — Output trigger signals can be selected in 4-bit groups to provide up to four different 4-bit outputs
- Selectable output trigger signals
  — Output trigger signals can be selected for each group from the compare match signals of four TPU channels
- Non-overlap mode
  — A non-overlap margin can be provided between pulse outputs
- Can operate together with the data transfer controller (DTC) and DMA controller (DMAC)
  — The compare match signals selected as output trigger signals can activate the DTC or DMAC for sequential output of data without CPU intervention
- Settable inverted output
  — Inverted data can be output for each group
- Module stop mode can be set
  — As the initial setting, PPG operation is halted. Register access is enabled by exiting module stop mode

11.1.2 Block Diagram

Figure 11-1 shows a block diagram of the PPG.

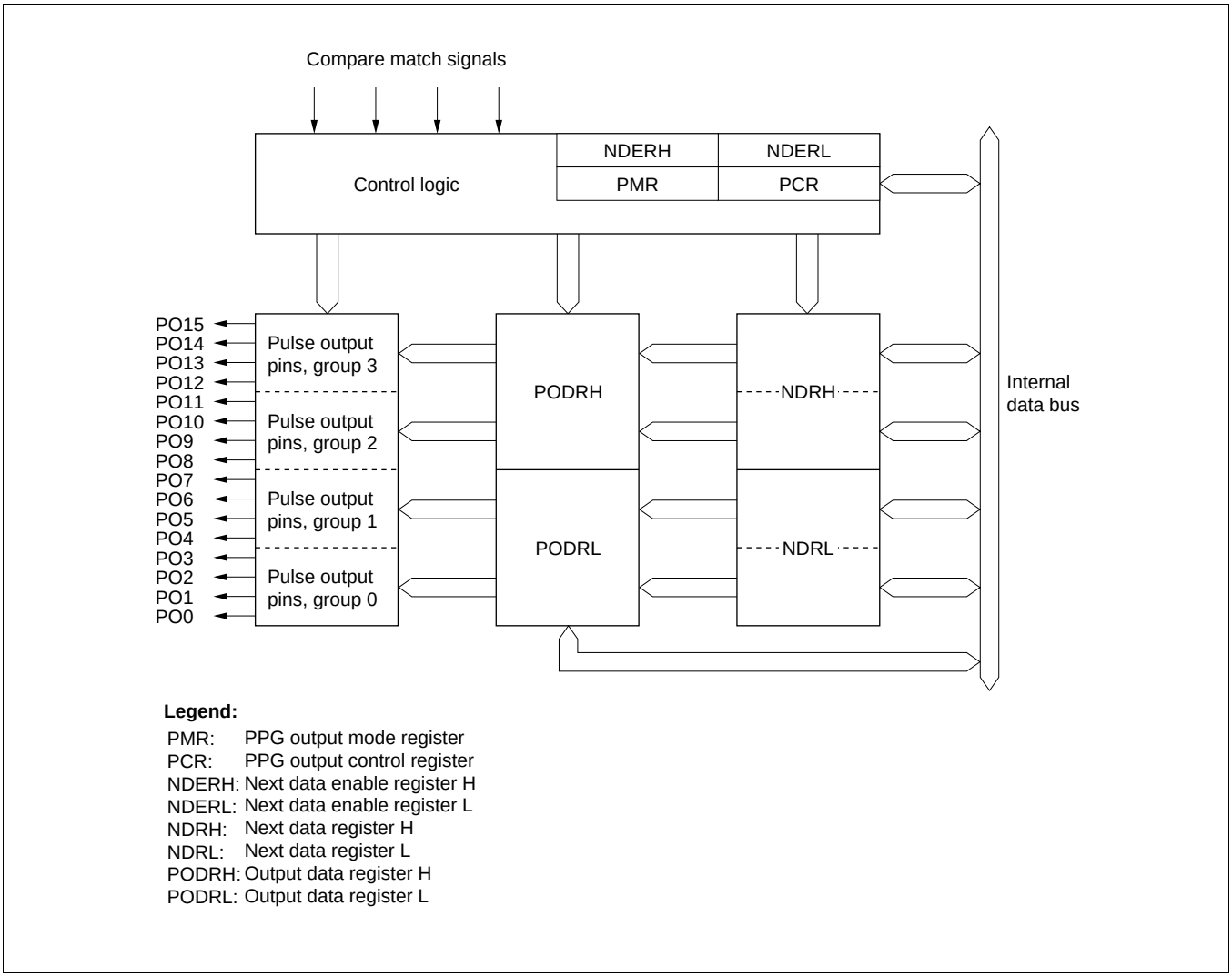

Figure 11-1 Block Diagram of PPG

11.1.3 Pin Configuration

Table 11-1 summarizes the PPG pins.

Table 11-1 PPG Pins

Name	Symbol	I/O	Function
Pulse output 0	PO0	Output	Group 0 pulse output
Pulse output 1	PO1	Output	
Pulse output 2	PO2	Output	
Pulse output 3	PO3	Output	
Pulse output 4	PO4	Output	Group 1 pulse output
Pulse output 5	PO5	Output	
Pulse output 6	PO6	Output	
Pulse output 7	PO7	Output	
Pulse output 8	PO8	Output	Group 2 pulse output
Pulse output 9	PO9	Output	
Pulse output 10	PO10	Output	
Pulse output 11	PO11	Output	
Pulse output 12	PO12	Output	Group 3 pulse output
Pulse output 13	PO13	Output	
Pulse output 14	PO14	Output	
Pulse output 15	PO15	Output	

11.1.4 Registers

Table 11-2 summarizes the PPG registers.

Table 11-2 PPG Registers

Name	Abbreviation	R/W	Initial Value	Address*[1]
PPG output control register	PCR	R/W	H'FF	H'FF46
PPG output mode register	PMR	R/W	H'F0	H'FF47
Next data enable register H	NDERH	R/W	H'00	H'FF48
Next data enable register L	NDERL	R/W	H'00	H'FF49
Output data register H	PODRH	R/(W)*[2]	H'00	H'FF4A
Output data register L	PODRL	R/(W)*[2]	H'00	H'FF4B
Next data register H	NDRH	R/W	H'00	H'FF4C*[3] H'FF4E
Next data register L	NDRL	R/W	H'00	H'FF4D*[3] H'FF4F
Port 1 data direction register	P1DDR	W	H'00	H'FEB0
Port 2 data direction register	P2DDR	W	H'00	H'FEB1
Module stop control register	MSTPCR	R/W	H'3FFF	H'FF3C

Notes: 1. Lower 16 bits of the address.

2. Bits used for pulse output cannot be written to.

3. When the same output trigger is selected for pulse output groups 2 and 3 by the PCR setting, the NDRH address is H'FF4C. When the output triggers are different, the NDRH address is H'FF4E for group 2 and H'FF4C for group 3.

   Similarly, when the same output trigger is selected for pulse output groups 0 and 1 by the PCR setting, the NDRL address is H'FF4D. When the output triggers are different, the NDRL address is H'FF4F for group 0 and H'FF4D for group 1.

11.2 Register Descriptions

11.2.1 Next Data Enable Registers H and L (NDERH, NDERL)

NDERH

Bit :	7	6	5	4	3	2	1	0
	NDER15	NDER14	NDER13	NDER12	NDER11	NDER10	NDER9	NDER8
Initial value :	0	0	0	0	0	0	0	0
R/W :	R/W	R/W	R/W	R/W	R/W	R/W	R/W	R/W

NDERL

Bit :	7	6	5	4	3	2	1	0
	NDER7	NDER6	NDER5	NDER4	NDER3	NDER2	NDER1	NDER0
Initial value :	0	0	0	0	0	0	0	0
R/W :	R/W	R/W	R/W	R/W	R/W	R/W	R/W	R/W

NDERH and NDERL are 8-bit readable/writable registers that enable or disable pulse output on a bit-by-bit basis.

If a bit is enabled for pulse output by NDERH or NDERL, the NDR value is automatically transferred to the corresponding PODR bit when the TPU compare match event specified by PCR occurs, updating the output value. If pulse output is disabled, the bit value is not transferred from NDR to PODR and the output value does not change.

NDERH and NDERL are each initialized to H'00 by a reset and in hardware standby mode. They are not initialized in software standby mode.

NDERH Bits 7 to 0—Next Data Enable 15 to 8 (NDER15 to NDER8): These bits enable or disable pulse output on a bit-by-bit basis.

Bits 7 to 0 NDER15 to NDER8	Description
0	Pulse outputs PO15 to PO8 are disabled (NDR15 to NDR8 are not transferred to POD15 to POD8) (Initial value)
1	Pulse outputs PO15 to PO8 are enabled (NDR15 to NDR8 are transferred to POD15 to POD8)

NDERL Bits 7 to 0—Next Data Enable 7 to 0 (NDER7 to NDER0): These bits enable or disable pulse output on a bit-by-bit basis.

Bits 7 to 0 NDER7 to NDER0	Description
0	Pulse outputs PO7 to PO0 are disabled (NDR7 to NDR0 are not transferred to POD7 to POD0) (Initial value)
1	Pulse outputs PO7 to PO0 are enabled (NDR7 to NDR0 are transferred to POD7 to POD0)

11.2.2 Output Data Registers H and L (PODRH, PODRL)

PODRH

Bit	:	7	6	5	4	3	2	1	0
		POD15	POD14	POD13	POD12	POD11	POD10	POD9	POD8
Initial value	:	0	0	0	0	0	0	0	0
R/W	:	R/(W)*	R/(W)*	R/(W)*	R/(W)*	R/(W)*	R/(W)*	R/(W)*	R/(W)*

PODRL

Bit	:	7	6	5	4	3	2	1	0
		POD7	POD6	POD5	POD4	POD3	POD2	POD1	POD0
Initial value	:	0	0	0	0	0	0	0	0
R/W	:	R/(W)*	R/(W)*	R/(W)*	R/(W)*	R/(W)*	R/(W)*	R/(W)*	R/(W)*

Note: * A bit that has been set for pulse output by NDER is read-only.

PODRH and PODRL are 8-bit readable/writable registers that store output data for use in pulse output.

11.2.3 Next Data Registers H and L (NDRH, NDRL)

NDRH and NDRL are 8-bit readable/writable registers that store the next data for pulse output. During pulse output, the contents of NDRH and NDRL are transferred to the corresponding bits in PODRH and PODRL when the TPU compare match event specified by PCR occurs. The NDRH and NDRL addresses differ depending on whether pulse output groups have the same output trigger or different output triggers. For details see section 11.2.4, Notes on NDR Access.

NDRH and NDRL are each initialized to H'00 by a reset and in hardware standby mode. They are not initialized in software standby mode.

11.2.4 Notes on NDR Access

The NDRH and NDRL addresses differ depending on whether pulse output groups have the same output trigger or different output triggers.

Same Trigger for Pulse Output Groups: If pulse output groups 2 and 3 are triggered by the same compare match event, the NDRH address is H'FF4C. The upper 4 bits belong to group 3 and the lower 4 bits to group 2. Address H'FF4E consists entirely of reserved bits that cannot be modified and are always read as 1.

Address H'FF4C

Bit	:	7	6	5	4	3	2	1	0
		NDR15	NDR14	NDR13	NDR12	NDR11	NDR10	NDR9	NDR8
Initial value	:	0	0	0	0	0	0	0	0
R/W	:	R/W	R/W	R/W	R/W	R/W	R/W	R/W	R/W

Address H'FF4E

Bit :	7	6	5	4	3	2	1	0
	—	—	—	—	—	—	—	—
Initial value :	1	1	1	1	1	1	1	1
R/W :	—	—	—	—	—	—	—	—

If pulse output groups 0 and 1 are triggered by the same compare match event, the NDRL address is H'FF4D. The upper 4 bits belong to group 1 and the lower 4 bits to group 0. Address H'FF4F consists entirely of reserved bits that cannot be modified and are always read as 1.

Address H'FF4D

Bit :	7	6	5	4	3	2	1	0
	NDR7	NDR6	NDR5	NDR4	NDR3	NDR2	NDR1	NDR0
Initial value :	0	0	0	0	0	0	0	0
R/W :	R/W	R/W	R/W	R/W	R/W	R/W	R/W	R/W

Address H'FF4F

Bit :	7	6	5	4	3	2	1	0
	—	—	—	—	—	—	—	—
Initial value :	1	1	1	1	1	1	1	1
R/W :	—	—	—	—	—	—	—	—

Different Triggers for Pulse Output Groups: If pulse output groups 2 and 3 are triggered by different compare match events, the address of the upper 4 bits in NDRH (group 3) is H'FF4C and the address of the lower 4 bits (group 2) is H'FF4E. Bits 3 to 0 of address H'FF4C and bits 7 to 4 of address H'FF4E are reserved bits that cannot be modified and are always read as 1.

Address H'FF4C

Bit :	7	6	5	4	3	2	1	0
	NDR15	NDR14	NDR13	NDR12	—	—	—	—
Initial value :	0	0	0	0	1	1	1	1
R/W :	R/W	R/W	R/W	R/W	—	—	—	—

Address H'FF4E

Bit :	7	6	5	4	3	2	1	0
	—	—	—	—	NDR11	NDR10	NDR9	NDR8
Initial value :	1	1	1	1	0	0	0	0
R/W :	—	—	—	—	R/W	R/W	R/W	R/W

If pulse output groups 0 and 1 are triggered by different compare match event, the address of the upper 4 bits in NDRL (group 1) is H'FF4D and the address of the lower 4 bits (group 0) is H'FF4F. Bits 3 to 0 of address H'FF4D and bits 7 to 4 of address H'FF4F are reserved bits that cannot be modified and are always read as 1.

Address H'FF4D

Bit :	7	6	5	4	3	2	1	0
	NDR7	NDR6	NDR5	NDR4	—	—	—	—
Initial value :	0	0	0	0	1	1	1	1
R/W :	R/W	R/W	R/W	R/W	—	—	—	—

Address H'FF4F

Bit :	7	6	5	4	3	2	1	0
	—	—	—	—	NDR3	NDR2	NDR1	NDR0
Initial value :	1	1	1	1	0	0	0	0
R/W :	—	—	—	—	R/W	R/W	R/W	R/W

11.2.5 PPG Output Control Register (PCR)

Bit :	7	6	5	4	3	2	1	0
	G3CMS1	G3CMS0	G2CMS1	G2CMS0	G1CMS1	G1CMS0	G0CMS1	G0CMS0
Initial value :	1	1	1	1	1	1	1	1
R/W :	R/W	R/W	R/W	R/W	R/W	R/W	R/W	R/W

PCR is an 8-bit readable/writable register that selects output trigger signals for PPG outputs on a group-by-group basis.

PCR is initialized to H'FF by a reset and in hardware standby mode. It is not initialized in software standby mode.

Bits 7 and 6—Group 3 Compare Match Select 1 and 0 (G3CMS1, G3CMS0): These bits select the compare match that triggers pulse output group 3 (pins PO15 to PO12).

		Description
Bit 7 G3CMS1	**Bit 6 G3CMS0**	**Output Trigger for Pulse Output Group 3**
0	0	Compare match in TPU channel 0
	1	Compare match in TPU channel 1
1	0	Compare match in TPU channel 2
	1	Compare match in TPU channel 3 (Initial value)

Bits 5 and 4—Group 2 Compare Match Select 1 and 0 (G2CMS1, G2CMS0): These bits select the compare match that triggers pulse output group 2 (pins PO11 to PO8).

		Description
Bit 5 G2CMS1	**Bit 4 G2CMS0**	**Output Trigger for Pulse Output Group 2**
0	0	Compare match in TPU channel 0
	1	Compare match in TPU channel 1
1	0	Compare match in TPU channel 2
	1	Compare match in TPU channel 3 (Initial value)

Bits 3 and 2—Group 1 Compare Match Select 1 and 0 (G1CMS1, G1CMS0): These bits select the compare match that triggers pulse output group 1 (pins PO7 to PO4).

Bit 3 G1CMS1	Bit 2 G1CMS0	Description Output Trigger for Pulse Output Group 1
0	0	Compare match in TPU channel 0
	1	Compare match in TPU channel 1
1	0	Compare match in TPU channel 2
	1	Compare match in TPU channel 3 (Initial value)

Bits 1 and 0—Group 0 Compare Match Select 1 and 0 (G0CMS1, G0CMS0): These bits select the compare match that triggers pulse output group 0 (pins PO3 to PO0).

Bit 1 G0CMS1	Bit 0 G0CMS0	Description Output Trigger for Pulse Output Group 0
0	0	Compare match in TPU channel 0
	1	Compare match in TPU channel 1
1	0	Compare match in TPU channel 2
	1	Compare match in TPU channel 3 (Initial value)

11.2.6 PPG Output Mode Register (PMR)

Bit :	7	6	5	4	3	2	1	0
	G3INV	G2INV	G1INV	G0INV	G3NOV	G2NOV	G1NOV	G0NOV
Initial value :	1	1	1	1	0	0	0	0
R/W :	R/W	R/W	R/W	R/W	R/W	R/W	R/W	R/W

PMR is an 8-bit readable/writable register that selects pulse output inversion and non-overlapping operation for each group.

The output trigger period of a non-overlapping operation PPG output waveform is set in TGRB and the non-overlap margin is set in TGRA. The output values change at compare match A and B.

For details, see section 11.3.4, Non-Overlapping Pulse Output.

PMR is initialized to H'F0 by a reset and in hardware standby mode. It is not initialized in software standby mode.

Bit 7—Group 3 Inversion (G3INV): Selects direct output or inverted output for pulse output group 3 (pins PO15 to PO12).

Bit 7 G3INV	Description
0	Inverted output for pulse output group 3 (low-level output at pin for a 1 in PODRH)
1	Direct output for pulse output group 3 (high-level output at pin for a 1 in PODRH) (Initial value)

Bit 6—Group 2 Inversion (G2INV): Selects direct output or inverted output for pulse output group 2 (pins PO11 to PO8).

Bit 6 G2INV	Description
0	Inverted output for pulse output group 2 (low-level output at pin for a 1 in PODRH)
1	Direct output for pulse output group 2 (high-level output at pin for a 1 in PODRH) (Initial value)

Bit 5—Group 1 Inversion (G1INV): Selects direct output or inverted output for pulse output group 1 (pins PO7 to PO4).

Bit 5 G1INV	Description
0	Inverted output for pulse output group 1 (low-level output at pin for a 1 in PODRL)
1	Direct output for pulse output group 1 (high-level output at pin for a 1 in PODRL) (Initial value)

Bit 4—Group 0 Inversion (G0INV): Selects direct output or inverted output for pulse output group 0 (pins PO3 to PO0).

Bit 4 G0INV	Description
0	Inverted output for pulse output group 0 (low-level output at pin for a 1 in PODRL)
1	Direct output for pulse output group 0 (high-level output at pin for a 1 in PODRL) (Initial value)

Bit 3—Group 3 Non-Overlap (G3NOV): Selects normal or non-overlapping operation for pulse output group 3 (pins PO15 to PO12).

Bit 3 G3NOV	Description
0	Normal operation in pulse output group 3 (output values updated at compare match A in the selected TPU channel) (Initial value)
1	Non-overlapping operation in pulse output group 3 (independent 1 and 0 output at compare match A or B in the selected TPU channel)

Bit 2—Group 2 Non-Overlap (G2NOV): Selects normal or non-overlapping operation for pulse output group 2 (pins PO11 to PO8).

Bit 2 G2NOV	Description
0	Normal operation in pulse output group 2 (output values updated at compare match A in the selected TPU channel) (Initial value)
1	Non-overlapping operation in pulse output group 2 (independent 1 and 0 output at compare match A or B in the selected TPU channel)

Bit 1—Group 1 Non-Overlap (G1NOV): Selects normal or non-overlapping operation for pulse output group 1 (pins PO7 to PO4).

Bit 1 G1NOV	Description
0	Normal operation in pulse output group 1 (output values updated at compare match A in the selected TPU channel) (Initial value)
1	Non-overlapping operation in pulse output group 1 (independent 1 and 0 output at compare match A or B in the selected TPU channel)

Bit 0—Group 0 Non-Overlap (G0NOV): Selects normal or non-overlapping operation for pulse output group 0 (pins PO3 to PO0).

Bit 0 G0NOV	Description
0	Normal operation in pulse output group 0 (output values updated at compare match A in the selected TPU channel) (Initial value)
1	Non-overlapping operation in pulse output group 0 (independent 1 and 0 output at compare match A or B in the selected TPU channel)

11.2.7 Port 1 Data Direction Register (P1DDR)

Bit :	7	6	5	4	3	2	1	0
	P17DDR	P16DDR	P15DDR	P14DDR	P13DDR	P12DDR	P11DDR	P10DDR
Initial value :	0	0	0	0	0	0	0	0
R/W :	W	W	W	W	W	W	W	W

P1DDR is an 8-bit write-only register, the individual bits of which specify input or output for the pins of port 1.

Port 1 is multiplexed with pins PO15 to PO8. Bits corresponding to pins used for PPG output must be set to 1. For further information about P1DDR, see section 9.2, Port 1.

11.2.8 Port 2 Data Direction Register (P2DDR)

Bit :	7	6	5	4	3	2	1	0
	P27DDR	P26DDR	P25DDR	P24DDR	P23DDR	P22DDR	P21DDR	P20DDR
Initial value :	0	0	0	0	0	0	0	0
R/W :	W	W	W	W	W	W	W	W

P2DDR is an 8-bit write-only register, the individual bits of which specify input or output for the pins of port 2.

Port 2 is multiplexed with pins PO7 to PO0. Bits corresponding to pins used for PPG output must be set to 1. For further information about P2DDR, see section 9.3, Port 2.

11.2.9 Module Stop Control Register (MSTPCR)

	MSTPCRH								MSTPCRL							
Bit :	15	14	13	12	11	10	9	8	7	6	5	4	3	2	1	0
Initial value :	0	0	1	1	1	1	1	1	1	1	1	1	1	1	1	1
R/W :	R/W	R/W	R/W	R/W	R/W	R/W	R/W	R/W	R/W	R/W	R/W	R/W	R/W	R/W	R/W	R/W

MSTPCR is a 16-bit readable/writable register that performs module stop mode control.

When the MSTP11 bit in MSTPCR is set to 1, PPG operation stops at the end of the bus cycle and a transition is made to module stop mode. Registers cannot be read or written to in module stop mode. For details, see section 21.5, Module Stop Mode.

MSTPCR is initialized to H'3FFF by a reset and in hardware standby mode. It is not initialized in software standby mode.

Bit 11—Module Stop (MSTP11): Specifies the PPG module stop mode.

Bit 11 MSTP11	Description	
0	PPG module stop mode cleared	
1	PPG module stop mode set	(Initial value)

11.3 Operation

11.3.1 Overview

PPG pulse output is enabled when the corresponding bits in P1DDR, P2DDR, and NDER are set to 1. In this state the corresponding PODR contents are output.

When the compare match event specified by PCR occurs, the corresponding NDR bit contents are transferred to PODR to update the output values.

Figure 11-2 illustrates the PPG output operation and table 11-3 summarizes the PPG operating conditions.

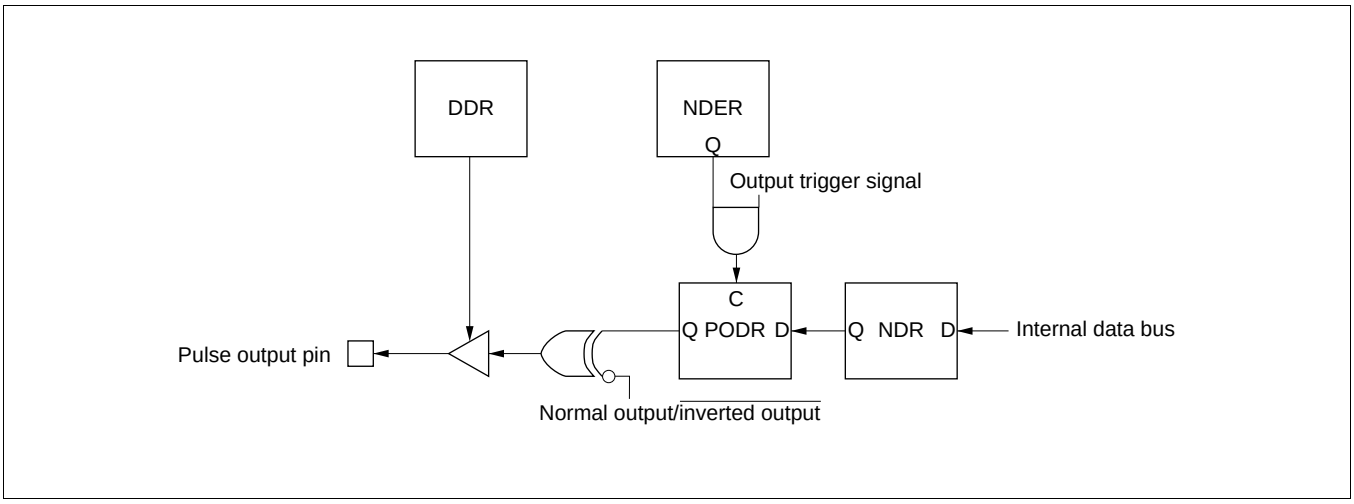

Figure 11-2 PPG Output Operation

Table 11-3 PPG Operating Conditions

NDER	DDR	Pin Function
0	0	Generic input port
	1	Generic output port
1	0	Generic input port (but the PODR bit is a read-only bit, and when compare match occurs, the NDR bit value is transferred to the PODR bit)
	1	PPG pulse output

Sequential output of data of up to 16 bits is possible by writing new output data to NDR before the next compare match. For details of non-overlapping operation, see section 11.3.4, Non-Overlapping Pulse Output.

11.3.2 Output Timing

If pulse output is enabled, NDR contents are transferred to PODR and output when the specified compare match event occurs. Figure 11-3 shows the timing of these operations for the case of normal output in groups 2 and 3, triggered by compare match A.

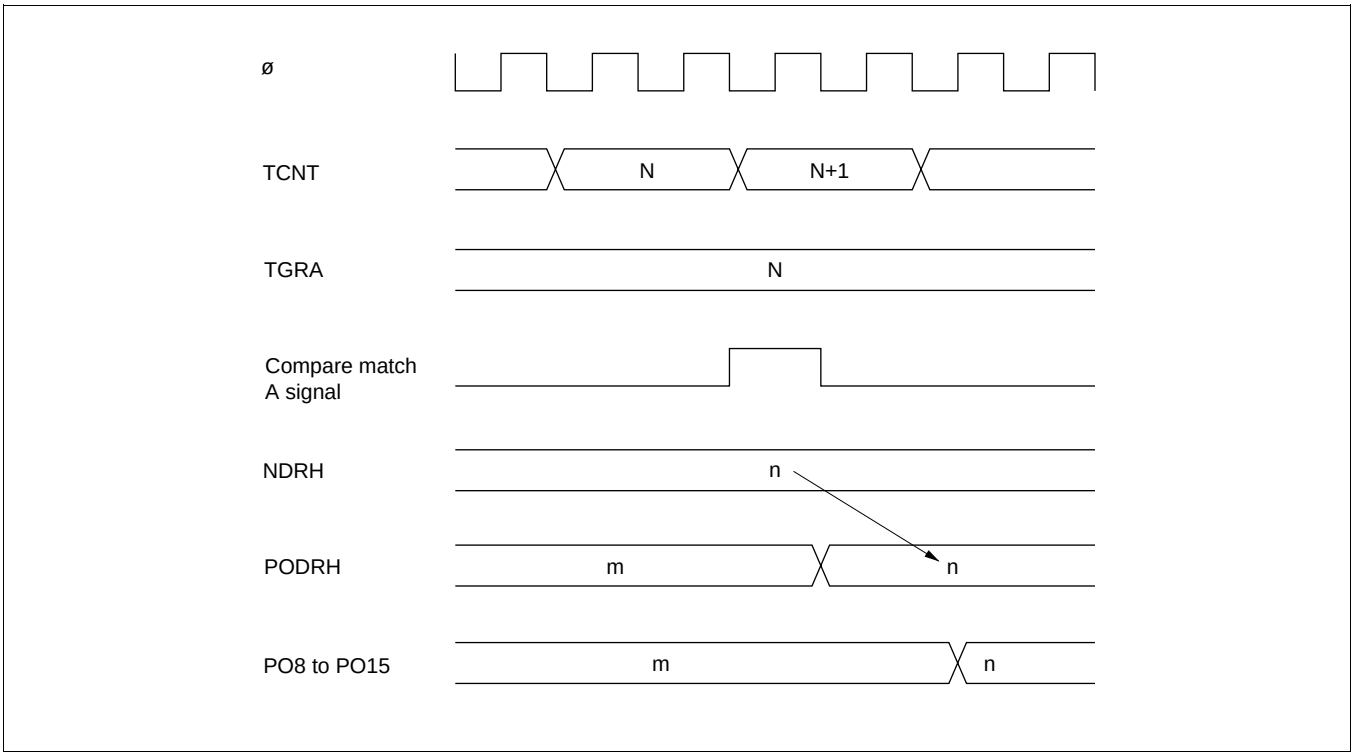

Figure 11-3 Timing of Transfer and Output of NDR Contents (Example)

11.3.3 Normal Pulse Output

Sample Setup Procedure for Normal Pulse Output: Figure 11-4 shows a sample procedure for setting up normal pulse output.

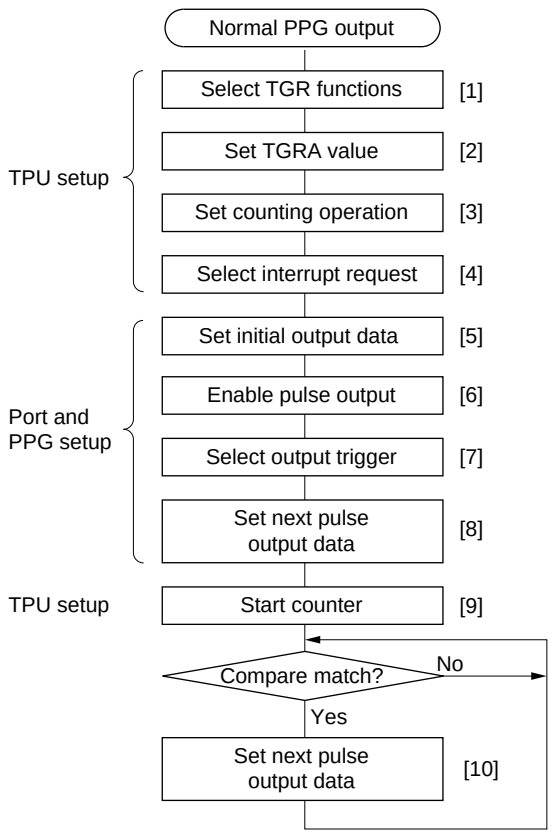

[1] Set TIOR to make TGRA an output compare register (with output disabled)

[2] Set the PPG output trigger period

[3] Select the counter clock source with bits TPSC2 to TPSC0 in TCR. Select the counter clear source with bits CCLR1 and CCLR0.

[4] Enable the TGIA interrupt in TIER. The DTC or DMAC can also be set up to transfer data to NDR.

[5] Set the initial output values in PODR.

[6] Set the DDR and NDER bits for the pins to be used for pulse output to 1.

[7] Select the TPU compare match event to be used as the output trigger in PCR.

[8] Set the next pulse output values in NDR.

[9] Set the CST bit in TSTR to 1 to start the TCNT counter.

[10] At each TGIA interrupt, set the next output values in NDR.

Figure 11-4 Setup Procedure for Normal Pulse Output (Example)

Example of Normal Pulse Output (Example of Five-Phase Pulse Output): Figure 11-5 shows an example in which pulse output is used for cyclic five-phase pulse output.

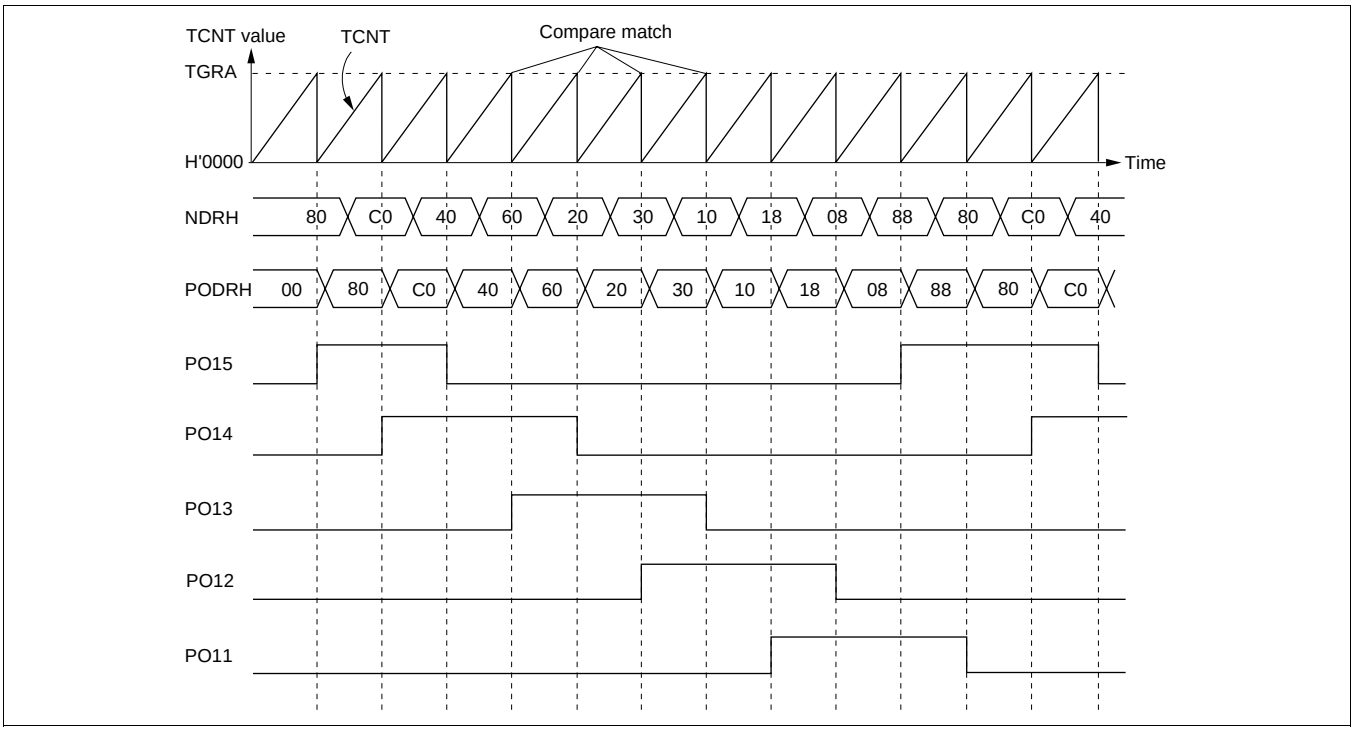

Figure 11-5 Normal Pulse Output Example (Five-Phase Pulse Output)

[1] Set up the TPU channel to be used as the output trigger channel so that TGRA is an output compare register and the counter will be cleared by compare match A. Set the trigger period in TGRA and set the TGIEA bit in TIER to 1 to enable the compare match A (TGIA) interrupt.

[2] Write H'F8 in P1DDR and NDERH, and set the G3CMS1, G3CMS0, G2CMS1, and G2CMS0 bits in PCR to select compare match in the TPU channel set up in the previous step to be the output trigger. Write output data H'80 in NDRH.

[3] The timer counter in the TPU channel starts. When compare match A occurs, the NDRH contents are transferred to PODRH and output. The TGIA interrupt handling routine writes the next output data (H'C0) in NDRH.

[4] Five-phase overlapping pulse output (one or two phases active at a time) can be obtained subsequently by writing H'40, H'60, H'20, H'30. H'10, H'18, H'08, H'88... at successive TGIA interrupts. If the DTC or DMAC is set for activation by this interrupt, pulse output can be obtained without imposing a load on the CPU.

11.3.4 Non-Overlapping Pulse Output

Sample Setup Procedure for Non-Overlapping Pulse Output: Figure 11-6 shows a sample procedure for setting up non-overlapping pulse output.

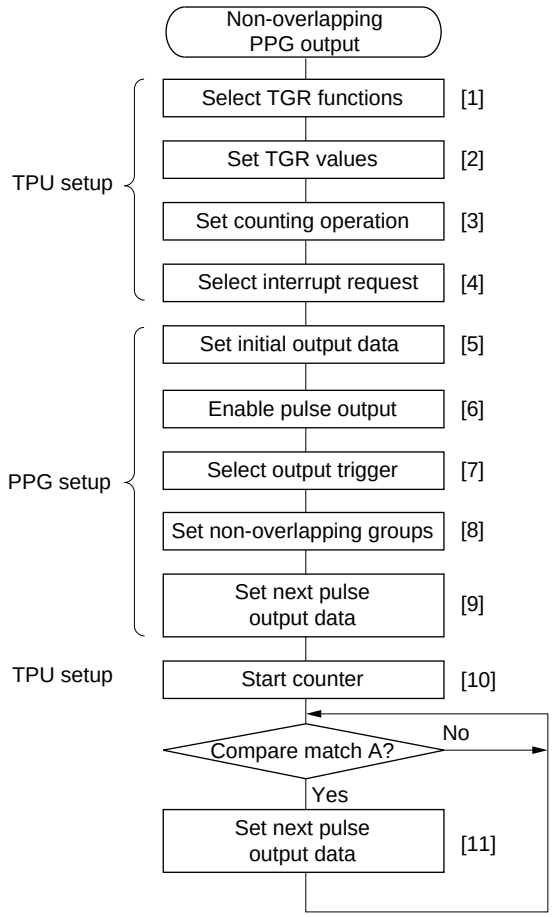

[1] Set TIOR to make TGRA and TGRB an output compare registers (with output disabled)

[2] Set the pulse output trigger period in TGRB and the non-overlap margin in TGRA.

[3] Select the counter clock source with bits TPSC2 to TPSC0 in TCR. Select the counter clear source with bits CCLR1 and CCLR0.

[4] Enable the TGIA interrupt in TIER. The DTC or DMAC can also be set up to transfer data to NDR.

[5] Set the initial output values in PODR.

[6] Set the DDR and NDER bits for the pins to be used for pulse output to 1.

[7] Select the TPU compare match event to be used as the pulse output trigger in PCR.

[8] In PMR, select the groups that will operate in non-overlap mode.

[9] Set the next pulse output values in NDR.

[10] Set the CST bit in TSTR to 1 to start the TCNT counter.

[11] At each TGIA interrupt, set the next output values in NDR.

Figure 11-6 Setup Procedure for Non-Overlapping Pulse Output (Example)

Example of Non-Overlapping Pulse Output (Example of Four-Phase Complementary Non-Overlapping Output):
Figure 11-7 shows an example in which pulse output is used for four-phase complementary non-overlapping pulse output.

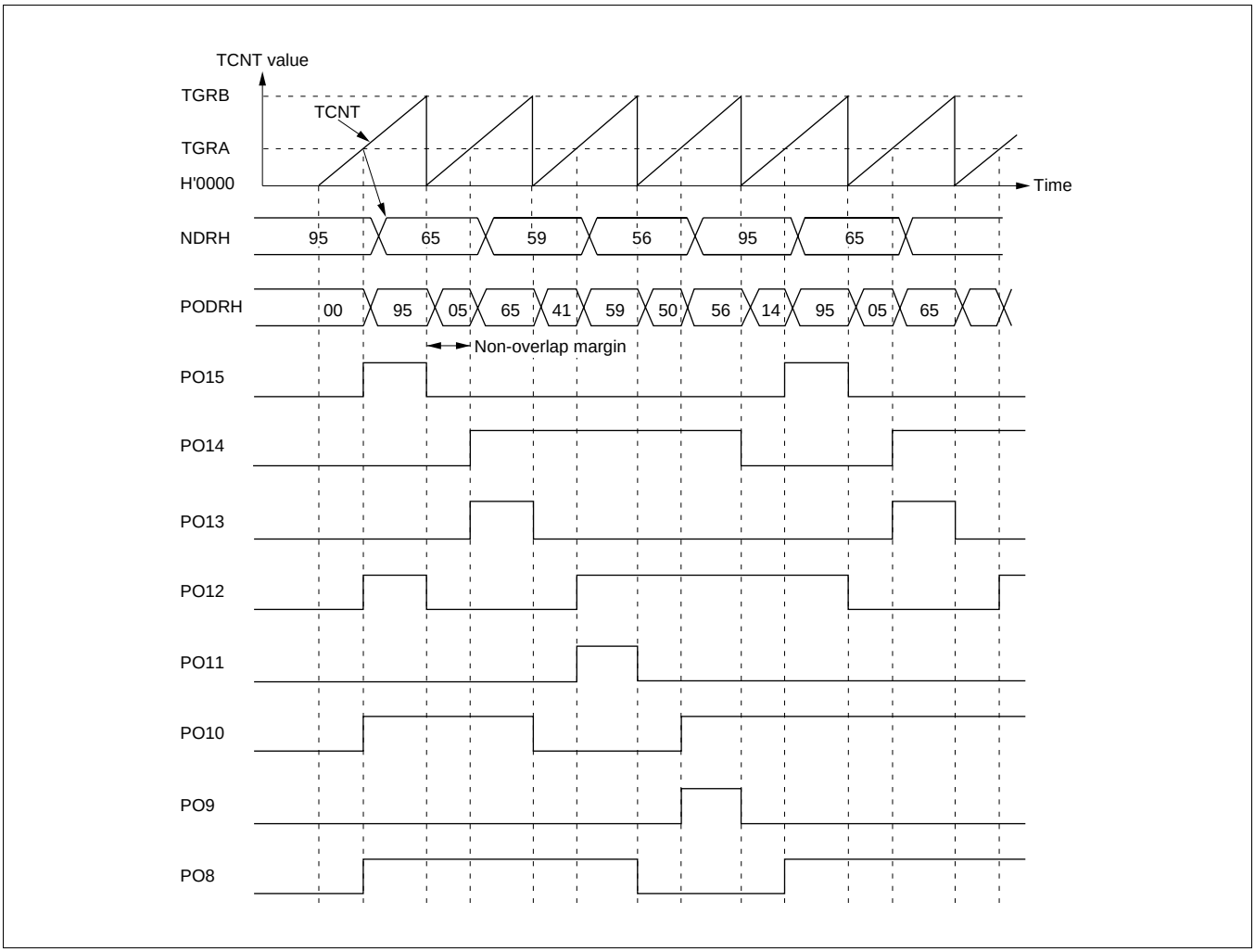

Figure 11-7 Non-Overlapping Pulse Output Example (Four-Phase Complementary)

[1] Set up the TPU channel to be used as the output trigger channel so that TGRA and TGRB are output compare registers. Set the trigger period in TGRB and the non-overlap margin in TGRA, and set the counter to be cleared by compare match B. Set the TGIEA bit in TIER to 1 to enable the TGIA interrupt.

[2] Write H'FF in P1DDR and NDERH, and set the G3CMS1, G3CMS0, G2CMS1, and G2CMS0 bits in PCR to select compare match in the TPU channel set up in the previous step to be the output trigger. Set the G3NOV and G2NOV bits in PMR to 1 to select non-overlapping output. Write output data H'95 in NDRH.

[3] The timer counter in the TPU channel starts. When a compare match with TGRB occurs, outputs change from 1 to 0. When a compare match with TGRA occurs, outputs change from 0 to 1 (the change from 0 to 1 is delayed by the value set in TGRA). The TGIA interrupt handling routine writes the next output data (H'65) in NDRH.

[4] Four-phase complementary non-overlapping pulse output can be obtained subsequently by writing H'59, H'56, H'95... at successive TGIA interrupts. If the DTC or DMAC is set for activation by this interrupt, pulse output can be obtained without imposing a load on the CPU.

11.3.5 Inverted Pulse Output

If the G3INV, G2INV, G1INV, and G0INV bits in PMR are cleared to 0, values that are the inverse of the PODR contents can be output.

Figure 11-8 shows the outputs when G3INV and G2INV are cleared to 0, in addition to the settings of figure 11-7.

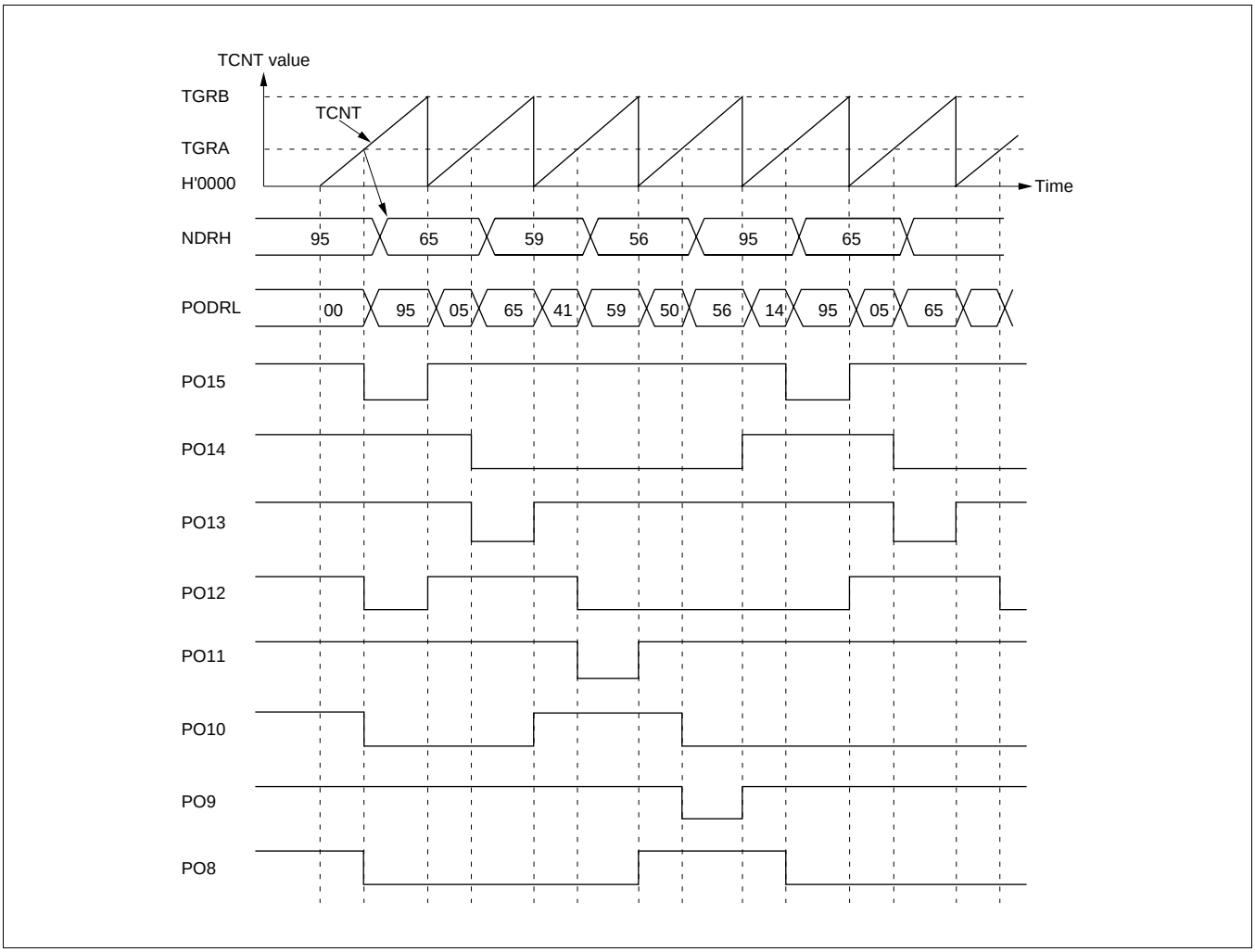

Figure 11-8 Inverted Pulse Output (Example)

11.3.6 Pulse Output Triggered by Input Capture

Pulse output can be triggered by TPU input capture as well as by compare match. If TGRA functions as an input capture register in the TPU channel selected by PCR, pulse output will be triggered by the input capture signal.

Figure 11-9 shows the timing of this output.

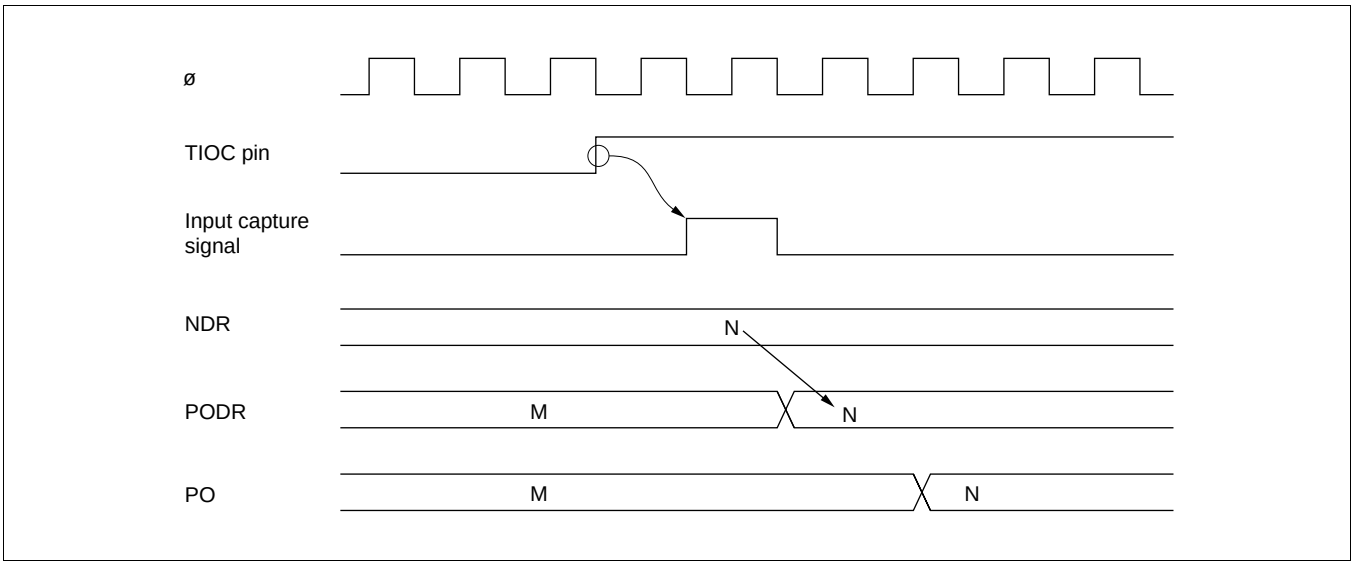

Figure 11-9 Pulse Output Triggered by Input Capture (Example)

11.4 Usage Notes

Operation of Pulse Output Pins: Pins PO0 to PO15 are also used for other peripheral functions such as the TPU. When output by another peripheral function is enabled, the corresponding pins cannot be used for pulse output. Note, however, that data transfer from NDR bits to PODR bits takes place, regardless of the usage of the pins.

Pin functions should be changed only under conditions in which the output trigger event will not occur.

Note on Non-Overlapping Output: During non-overlapping operation, the transfer of NDR bit values to PODR bits takes place as follows.

- NDR bits are always transferred to PODR bits at compare match A.
- At compare match B, NDR bits are transferred only if their value is 0. Bits are not transferred if their value is 1.

Figure 11-10 illustrates the non-overlapping pulse output operation.

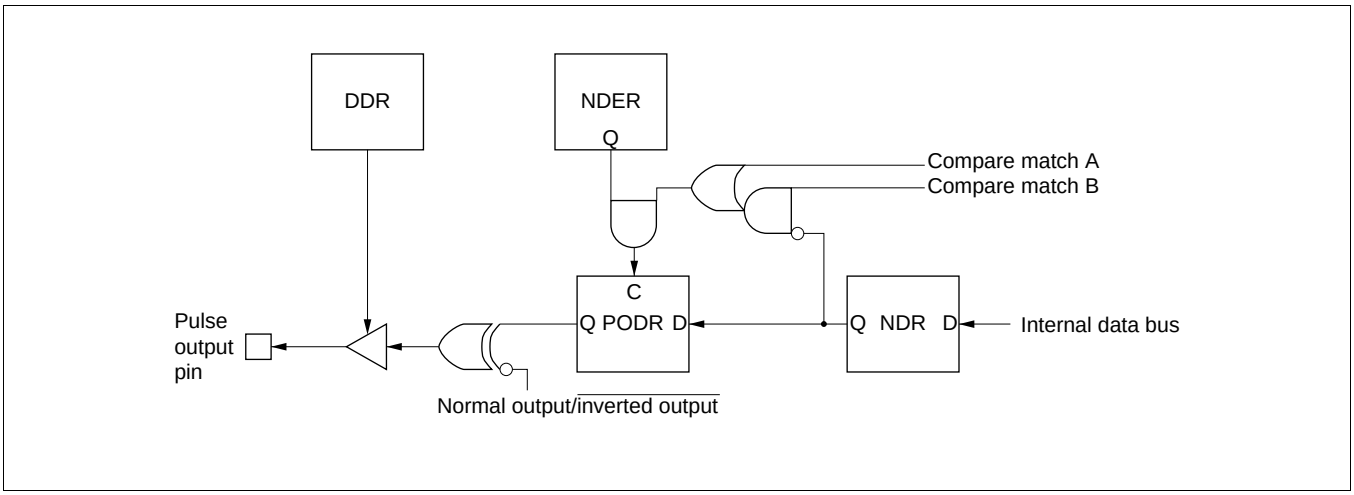

Figure 11-10 Non-Overlapping Pulse Output

Therefore, 0 data can be transferred ahead of 1 data by making compare match B occur before compare match A. The NDR contents should not be altered during the interval from compare match B to compare match A (the non-overlap margin).

This can be accomplished by having the TGIA interrupt handling routine write the next data in NDR, or by having the TGIA interrupt activate the DTC or DMAC. Note, however, that the next data must be written before the next compare match B occurs.

Figure 11-11 shows the timing of this operation.

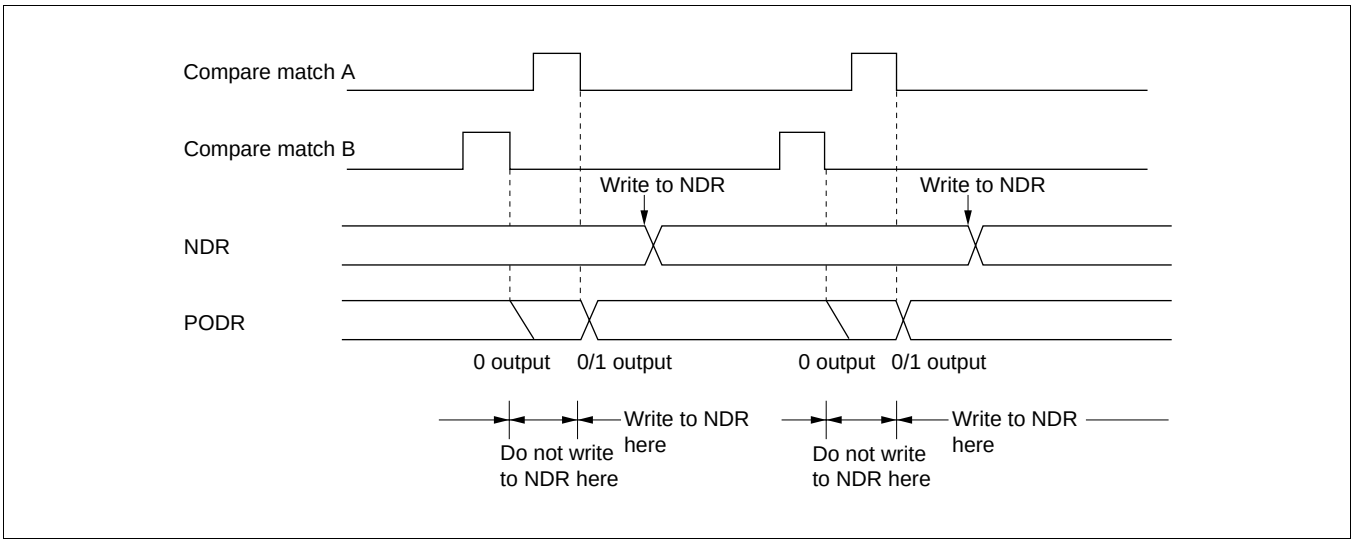

Figure 11-11 Non-Overlapping Operation and NDR Write Timing

Section 12 8-Bit Timers

12.1 Overview

The H8S/2357 Group includes an 8-bit timer module with two channels (TMR0 and TMR1). Each channel has an 8-bit counter (TCNT) and two time constant registers (TCORA and TCORB) that are constantly compared with the TCNT value to detect compare match events. The 8-bit timer module can thus be used for a variety of functions, including pulse output with an arbitrary duty cycle.

12.1.1 Features

The features of the 8-bit timer module are listed below.

- Selection of four clock sources
  The counters can be driven by one of three internal clock signals (ø/8, ø/64, or ø/8192) or an external clock input (enabling use as an external event counter).
- Selection of three ways to clear the counters
  The counters can be cleared on compare match A or B, or by an external reset signal.
- Timer output control by a combination of two compare match signals
  The timer output signal in each channel is controlled by a combination of two independent compare match signals, enabling the timer to generate output waveforms with an arbitrary duty cycle or PWM output.
- Provision for cascading of two channels
  — Operation as a 16-bit timer is possible, using channel 0 for the upper 8 bits and channel 1 for the lower 8 bits (16-bit count mode).
  — Channel 1 can be used to count channel 0 compare matches (compare match count mode).
- Three independent interrupts
  Compare match A and B and overflow interrupts can be requested independently.
- A/D converter conversion start trigger can be generated
  Channel 0 compare match A signal can be used as an A/D converter conversion start trigger.
- Module stop mode can be set
  — As the initial setting, 8-bit timer operation is halted. Register access is enabled by exiting module stop mode.

12.1.2 Block Diagram

Figure 12-1 shows a block diagram of the 8-bit timer module.

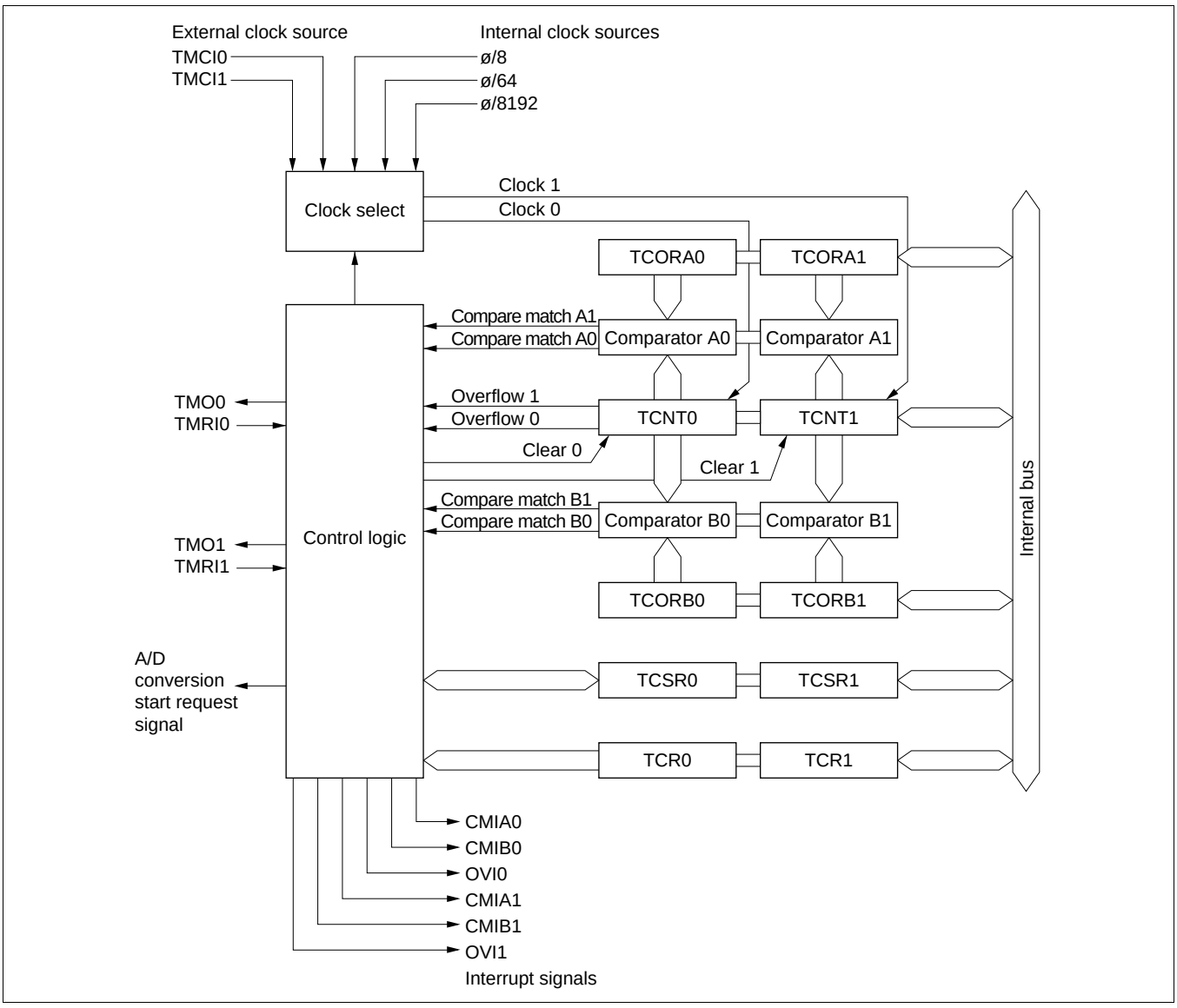

Figure 12-1 Block Diagram of 8-Bit Timer

12.1.3 Pin Configuration

Table 12-1 summarizes the input and output pins of the 8-bit timer.

Table 12-1 Input and Output Pins of 8-Bit Timer

Channel	Name	Symbol	I/O	Function
0	Timer output pin 0	TMO0	Output	Outputs at compare match
	Timer clock input pin 0	TMCI0	Input	Inputs external clock for counter
	Timer reset input pin 0	TMRI0	Input	Inputs external reset to counter
1	Timer output pin 1	TMO1	Output	Outputs at compare match
	Timer clock input pin 1	TMCI1	Input	Inputs external clock for counter
	Timer reset input pin 1	TMRI1	Input	Inputs external reset to counter

12.1.4 Register Configuration

Table 12-2 summarizes the registers of the 8-bit timer module.

Table 12-2 8-Bit Timer Registers

Channel	Name	Abbreviation	R/W	Initial value	Address*[1]
0	Timer control register 0	TCR0	R/W	H'00	H'FFB0
	Timer control/status register 0	TCSR0	R/(W)*[2]	H'00	H'FFB2
	Time constant register A0	TCORA0	R/W	H'FF	H'FFB4
	Time constant register B0	TCORB0	R/W	H'FF	H'FFB6
	Timer counter 0	TCNT0	R/W	H'00	H'FFB8
1	Timer control register 1	TCR1	R/W	H'00	H'FFB1
	Timer control/status register 1	TCSR1	R/(W)*[2]	H'10	H'FFB3
	Time constant register A1	TCORA1	R/W	H'FF	H'FFB5
	Time constant register B1	TCORB1	R/W	H'FF	H'FFB7
	Timer counter 1	TCNT1	R/W	H'00	H'FFB9
All	Module stop control register	MSTPCR	R/W	H'3FFF	H'FF3C

Notes: 1. Lower 16 bits of the address
2. Only 0 can be written to bits 7 to 5, to clear these flags.

Each pair of registers for channel 0 and channel 1 is a 16-bit register with the upper 8 bits for channel 0 and the lower 8 bits for channel 1, so they can be accessed together by word transfer instruction.

12.2 Register Descriptions

12.2.1 Timer Counters 0 and 1 (TCNT0, TCNT1)

	TCNT0								TCNT1							
Bit :	15	14	13	12	11	10	9	8	7	6	5	4	3	2	1	0
Initial value :	0	0	0	0	0	0	0	0	0	0	0	0	0	0	0	0
R/W :	R/W	R/W	R/W	R/W	R/W	R/W	R/W	R/W	R/W	R/W	R/W	R/W	R/W	R/W	R/W	R/W

TCNT0 and TCNT1 are 8-bit readable/writable up-counters that increment on pulses generated from an internal or external clock source. This clock source is selected by clock select bits CKS2 to CKS0 of TCR. The CPU can read or write to TCNT0 and TCNT1 at all times.

TCNT0 and TCNT1 comprise a single 16-bit register, so they can be accessed together by word transfer instruction.

TCNT0 and TCNT1 can be cleared by an external reset input or by a compare match signal. Which signal is to be used for clearing is selected by clock clear bits CCLR1 and CCLR0 of TCR.

When a timer counter overflows from H'FF to H'00, OVF in TCSR is set to 1.

TCNT0 and TCNT1 are each initialized to H'00 by a reset and in hardware standby mode.

12.2.2 Time Constant Registers A0 and A1 (TCORA0, TCORA1)

	TCORA0								TCORA1							
Bit :	15	14	13	12	11	10	9	8	7	6	5	4	3	2	1	0
Initial value :	1	1	1	1	1	1	1	1	1	1	1	1	1	1	1	1
R/W :	R/W	R/W	R/W	R/W	R/W	R/W	R/W	R/W	R/W	R/W	R/W	R/W	R/W	R/W	R/W	R/W

TCORA0 and TCORA1 are 8-bit readable/writable registers. TCORA0 and TCORA1 comprise a single 16-bit register so they can be accessed together by word transfer instruction.

TCORA is continually compared with the value in TCNT. When a match is detected, the corresponding CMFA flag of TCSR is set. Note, however, that comparison is disabled during the T_2 state of a TCOR write cycle.

The timer output can be freely controlled by these compare match signals and the settings of bits OS1 and OS0 of TCSR.

TCORA0 and TCORA1 are each initialized to H'FF by a reset and in hardware standby mode.

12.2.3 Time Constant Registers B0 and B1 (TCORB0, TCORB1)

	TCORB0								TCORB1							
Bit :	15	14	13	12	11	10	9	8	7	6	5	4	3	2	1	0
Initial value :	1	1	1	1	1	1	1	1	1	1	1	1	1	1	1	1
R/W :	R/W	R/W	R/W	R/W	R/W	R/W	R/W	R/W	R/W	R/W	R/W	R/W	R/W	R/W	R/W	R/W

TCORB0 and TCORB1 are 8-bit readable/writable registers. TCORB0 and TCORB1 comprise a single 16-bit register so they can be accessed together by word transfer instruction.

TCORB is continually compared with the value in TCNT. When a match is detected, the corresponding CMFB flag of TCSR is set. Note, however, that comparison is disabled during the T_2 state of a TCOR write cycle.

The timer output can be freely controlled by these compare match signals and the settings of output select bits OS3 and OS2 of TCSR.

TCORB0 and TCORB1 are each initialized to H'FF by a reset and in hardware standby mode.

12.2.4 Time Control Registers 0 and 1 (TCR0, TCR1)

Bit :	7	6	5	4	3	2	1	0
	CMIEB	CMIEA	OVIE	CCLR1	CCLR0	CKS2	CKS1	CKS0
Initial value :	0	0	0	0	0	0	0	0
R/W :	R/W	R/W	R/W	R/W	R/W	R/W	R/W	R/W

TCR0 and TCR1 are 8-bit readable/writable registers that select the clock source and the time at which TCNT is cleared, and enable interrupts.

TCR0 and TCR1 are each initialized to H'00 by a reset and in hardware standby mode.

For details of this timing, see section 12.3, Operation.

Bit 7—Compare Match Interrupt Enable B (CMIEB): Selects whether CMFB interrupt requests (CMIB) are enabled or disabled when the CMFB flag of TCSR is set to 1.

Bit 7 CMIEB	Description	
0	CMFB interrupt requests (CMIB) are disabled	(Initial value)
1	CMFB interrupt requests (CMIB) are enabled	

Bit 6—Compare Match Interrupt Enable A (CMIEA): Selects whether CMFA interrupt requests (CMIA) are enabled or disabled when the CMFA flag of TCSR is set to 1.

Bit 6 CMIEA	Description	
0	CMFA interrupt requests (CMIA) are disabled	(Initial value)
1	CMFA interrupt requests (CMIA) are enabled	

Bit 5—Timer Overflow Interrupt Enable (OVIE): Selects whether OVF interrupt requests (OVI) are enabled or disabled when the OVF flag of TCSR is set to 1.

Bit 5 OVIE	Description	
0	OVF interrupt requests (OVI) are disabled	(Initial value)
1	OVF interrupt requests (OVI) are enabled	

Bits 4 and 3—Counter Clear 1 and 0 (CCLR1 and CCLR0): These bits select the method by which TCNT is cleared: by compare match A or B, or by an external reset input.

Bit 4 CCLR1	Bit 3 CCLR0	Description	
0	0	Clear is disabled	(Initial value)
	1	Clear by compare match A	
1	0	Clear by compare match B	
	1	Clear by rising edge of external reset input	

Bits 2 to 0—Clock Select 2 to 0 (CKS2 to CKS0): These bits select whether the clock input to TCNT is an internal or external clock.

Three internal clocks can be selected, all divided from the system clock (ø): ø/8, ø/64, and ø/8192. The falling edge of the selected internal clock triggers the count.

When use of an external clock is selected, three types of count can be selected: at the rising edge, the falling edge, and both rising and falling edges.

Some functions differ between channel 0 and channel 1.

Bit 2 CKS2	Bit 1 CKS1	Bit 0 CKS0	Description	
0	0	0	Clock input disabled	(Initial value)
		1	Internal clock, counted at falling edge of ø/8	
	1	0	Internal clock, counted at falling edge of ø/64	
		1	Internal clock, counted at falling edge of ø/8192	
1	0	0	For channel 0: count at TCNT1 overflow signal* For channel 1: count at TCNT0 compare match A*	
		1	External clock, counted at rising edge	
	1	0	External clock, counted at falling edge	
		1	External clock, counted at both rising and falling edges	

Note: * If the count input of channel 0 is the TCNT1 overflow signal and that of channel 1 is the TCNT0 compare match signal, no incrementing clock is generated. Do not use this setting.

12.2.5 Timer Control/Status Registers 0 and 1 (TCSR0, TCSR1)

TCSR0

Bit	:	7	6	5	4	3	2	1	0
		CMFB	CMFA	OVF	ADTE	OS3	OS2	OS1	OS0
Initial value	:	0	0	0	0	0	0	0	0
R/W	:	R/(W)*	R/(W)*	R/(W)*	R/W	R/W	R/W	R/W	R/W

TCSR1

Bit	:	7	6	5	4	3	2	1	0
		CMFB	CMFA	OVF	—	OS3	OS2	OS1	OS0
Initial value	:	0	0	0	1	0	0	0	0
R/W	:	R/(W)*	R/(W)*	R/(W)*	—	R/W	R/W	R/W	R/W

Note: * Only 0 can be written to bits 7 to 5, to clear these flags.

TCSR0 and TCSR1 are 8-bit registers that display compare match and overflow statuses, and control compare match output.

TCSR0 is initialized to H'00, and TCSR1 to H'10, by a reset and in hardware standby mode.

Bit 7—Compare Match Flag B (CMFB): Status flag indicating whether the values of TCNT and TCORB match.

Bit 7 CMFB	Description
0	[Clearing conditions] (Initial value) • Cleared by reading CMFB when CMFB = 1, then writing 0 to CMFB • When DTC is activated by CMIB interrupt while DISEL bit of MRB in DTC is 0
1	[Setting condition] Set when TCNT matches TCORB

Bit 6—Compare Match Flag A (CMFA): Status flag indicating whether the values of TCNT and TCORA match.

Bit 6 CMFA	Description
0	[Clearing conditions] (Initial value) • Cleared by reading CMFA when CMFA = 1, then writing 0 to CMFA • When DTC is activated by CMIA interrupt while DISEL bit of MRB in DTC is 0
1	[Setting condition] Set when TCNT matches TCORA

Bit 5—Timer Overflow Flag (OVF): Status flag indicating that TCNT has overflowed (changed from H'FF to H'00).

Bit 5 OVF	Description	
0	[Clearing condition] Cleared by reading OVF when OVF = 1, then writing 0 to OVF	(Initial value)
1	[Setting condition] Set when TCNT overflows from H'FF to H'00	

Bit 4—A/D Trigger Enable (ADTE) (TCSR0 Only): Selects enabling or disabling of A/D converter start requests by compare-match A.

In TCSR1, this bit is reserved: it is always read as 1 and cannot be modified.

Bit 4 ADTE	Description	
0	A/D converter start requests by compare match A are disabled	(Initial value)
1	A/D converter start requests by compare match A are enabled	

Bits 3 to 0—Output Select 3 to 0 (OS3 to OS0): These bits specify how the timer output level is to be changed by a compare match of TCOR and TCNT.

Bits OS3 and OS2 select the effect of compare match B on the output level, bits OS1 and OS0 select the effect of compare match A on the output level, and both of them can be controlled independently.

Note, however, that priorities are set such that: toggle output > 1 output > 0 output. If compare matches occur simultaneously, the output changes according to the compare match with the higher priority.

Timer output is disabled when bits OS3 to OS0 are all 0.

After a reset, the timer output is 0 until the first compare match event occurs.

Bit 3 OS3	Bit 2 OS2	Description	
0	0	No change when compare match B occurs	(Initial value)
	1	0 is output when compare match B occurs	
1	0	1 is output when compare match B occurs	
	1	Output is inverted when compare match B occurs (toggle output)	

Bit 1 OS1	Bit 0 OS0	Description	
0	0	No change when compare match A occurs	(Initial value)
	1	0 is output when compare match A occurs	
1	0	1 is output when compare match A occurs	
	1	Output is inverted when compare match A occurs (toggle output)	

12.2.6 Module Stop Control Register (MSTPCR)

	MSTPCRH								MSTPCRL							
Bit :	15	14	13	12	11	10	9	8	7	6	5	4	3	2	1	0
Initial value :	0	0	1	1	1	1	1	1	1	1	1	1	1	1	1	1
R/W :	R/W	R/W	R/W	R/W	R/W	R/W	R/W	R/W	R/W	R/W	R/W	R/W	R/W	R/W	R/W	R/W

MSTPCR is a 16-bit readable/writable register that performs module stop mode control.

When the MSTP12 bit in MSTPCR is set to 1, the 8-bit timer operation stops at the end of the bus cycle and a transition is made to module stop mode. Registers cannot be read or written to in module stop mode. For details, see section 21.5, Module Stop Mode.

MSTPCR is initialized to H'3FFF by a reset and in hardware standby mode. It is not initialized in software standby mode.

Bit 12—Module Stop (MSTP12): Specifies the 8-bit timer module stop mode.

Bit 12 MSTP12	Description	
0	8-bit timer module stop mode cleared	
1	8-bit timer module stop mode set	(Initial value)

12.3 Operation

12.3.1 TCNT Incrementation Timing

TCNT is incremented by input clock pulses (either internal or external).

Internal Clock: Three different internal clock signals (ø/8, ø/64, or ø/8192) divided from the system clock (ø) can be selected, by setting bits CKS2 to CKS0 in TCR. Figure 12-2 shows the count timing.

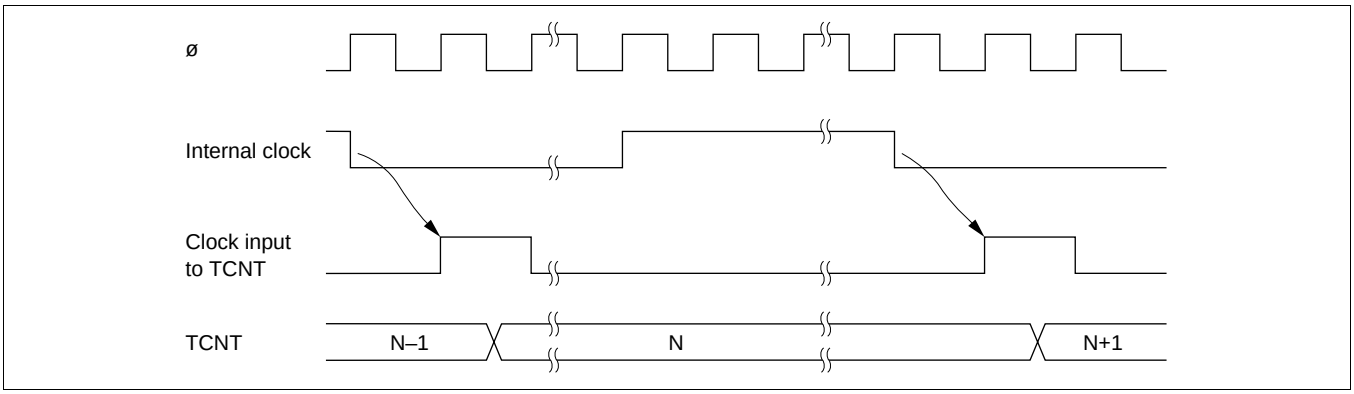

Figure 12-2 Count Timing for Internal Clock Input

External Clock: Three incrementation methods can be selected by setting bits CKS2 to CKS0 in TCR: at the rising edge, the falling edge, and both rising and falling edges.

Note that the external clock pulse width must be at least 1.5 states for incrementation at a single edge, and at least 2.5 states for incrementation at both edges. The counter will not increment correctly if the pulse width is less than these values.

Figure 12-3 shows the timing of incrementation at both edges of an external clock signal.

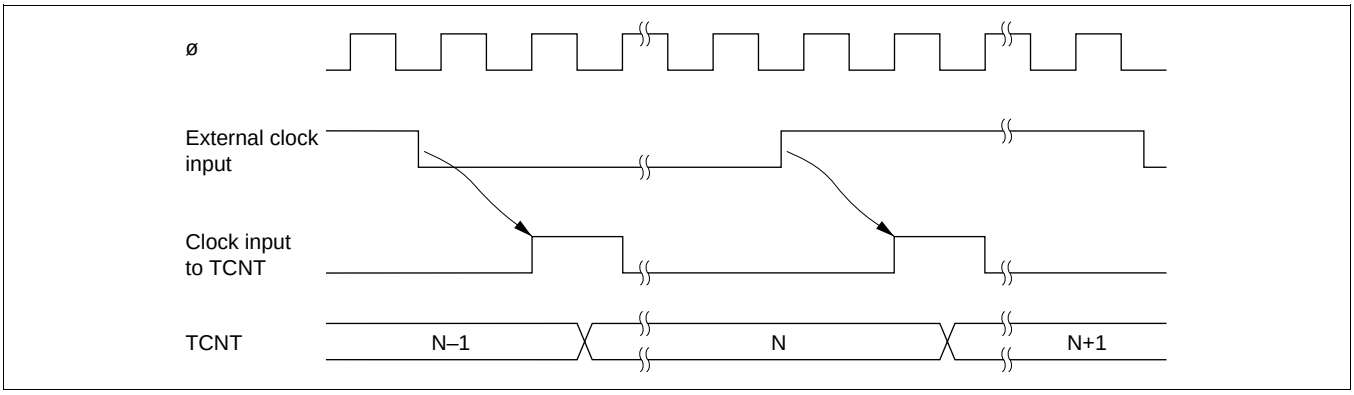

Figure 12-3 Count Timing for External Clock Input

12.3.2 Compare Match Timing

Setting of Compare Match Flags A and B (CMFA, CMFB): The CMFA and CMFB flags in TCSR are set to 1 by a compare match signal generated when the TCOR and TCNT values match. The compare match signal is generated at the last state in which the match is true, just before the timer counter is updated.

Therefore, when TCOR and TCNT match, the compare match signal is not generated until the next incrementation clock input. Figure 12-4 shows this timing.

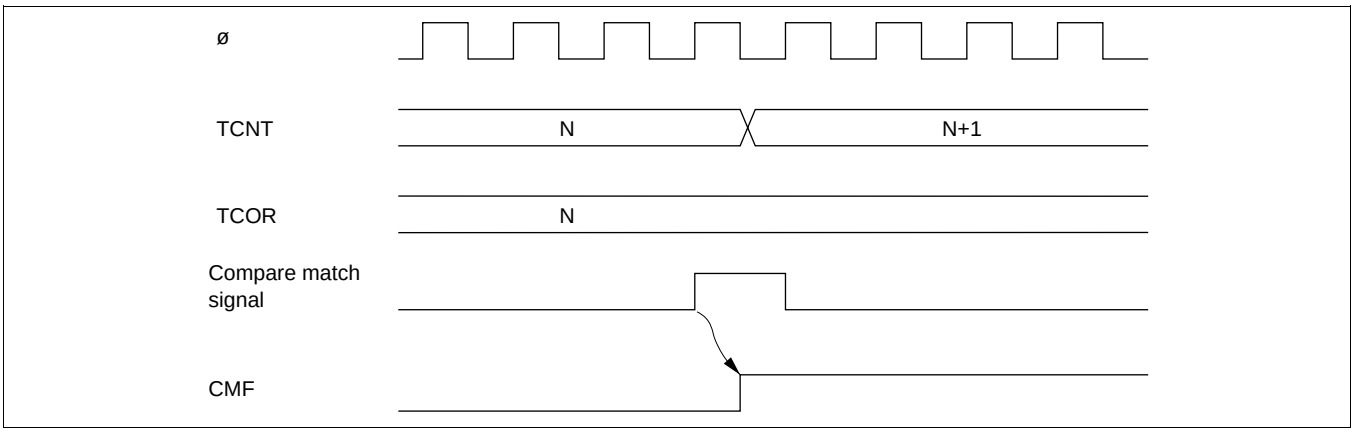

Figure 12-4 Timing of CMF Setting

Timer Output Timing: When compare match A or B occurs, the timer output changes a specified by bits OS3 to OS0 in TCSR. Depending on these bits, the output can remain the same, change to 0, change to 1, or toggle.

Figure 12-5 shows the timing when the output is set to toggle at compare match A.

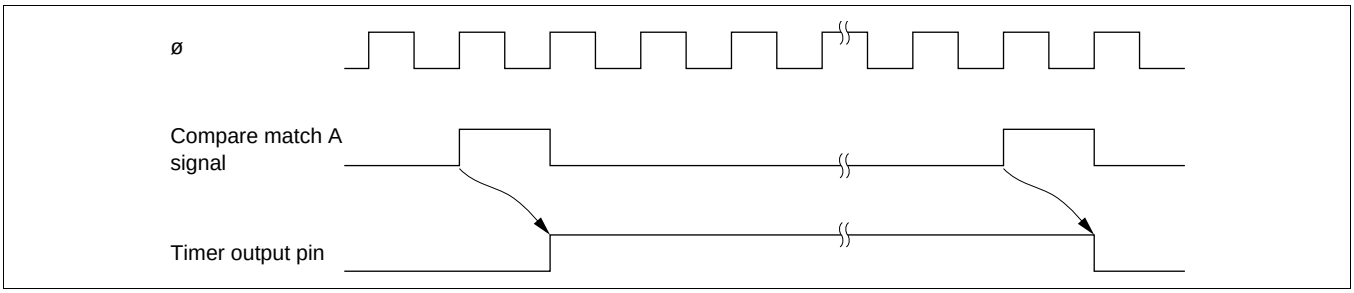

Figure 12-5 Timing of Timer Output

Timing of Compare Match Clear: The timer counter is cleared when compare match A or B occurs, depending on the setting of the CCLR1 and CCLR0 bits in TCR. Figure 12-6 shows the timing of this operation.

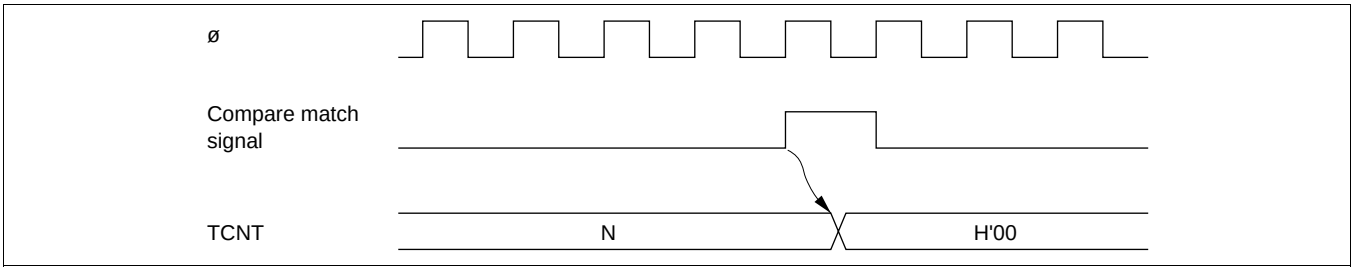

Figure 12-6 Timing of Compare Match Clear

12.3.3 Timing of External RESET on TCNT

TCNT is cleared at the rising edge of an external reset input, depending on the settings of the CCLR1 and CCLR0 bits in TCR. The clear pulse width must be at least 1.5 states. Figure 12-7 shows the timing of this operation.

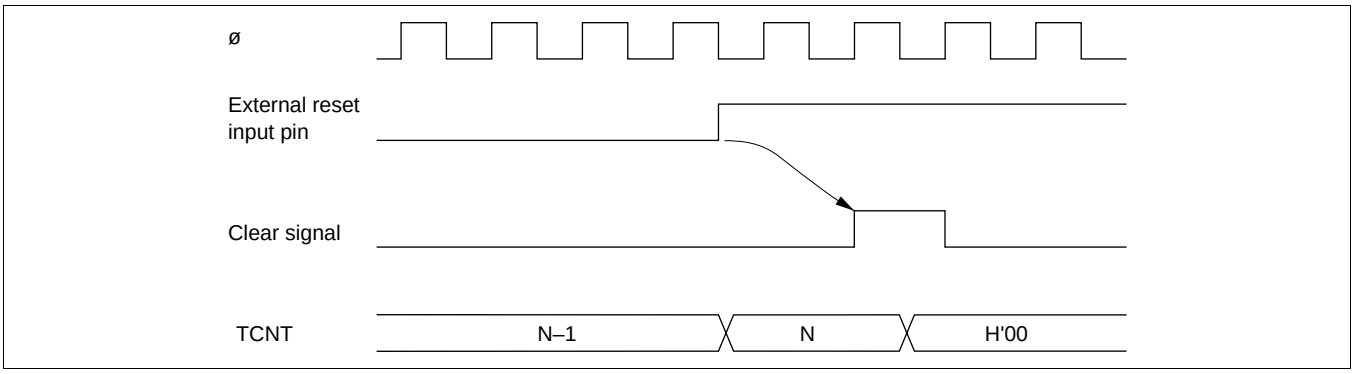

Figure 12-7 Timing of External Reset

12.3.4 Timing of Overflow Flag (OVF) Setting

The OVF in TCSR is set to 1 when the timer count overflows (changes from H'FF to H'00). Figure 12-8 shows the timing of this operation.

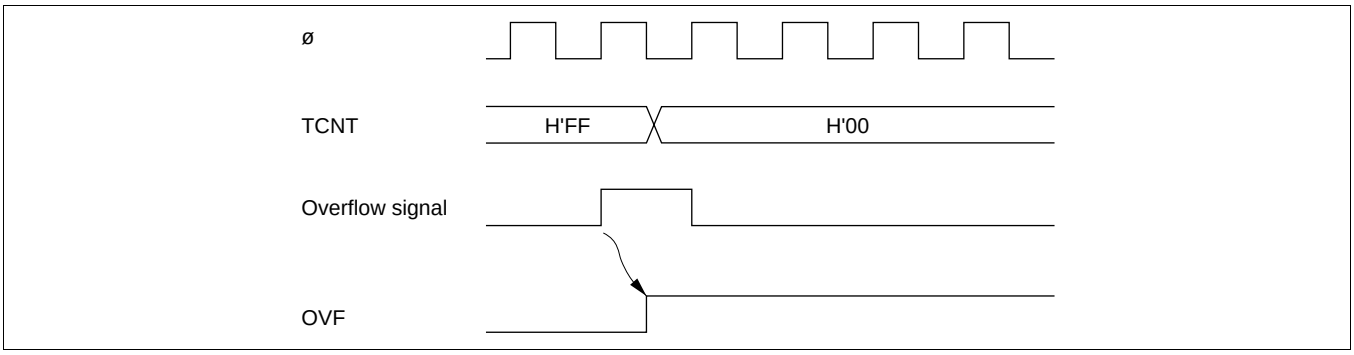

Figure 12-8 Timing of OVF Setting

12.3.5 Operation with Cascaded Connection

If bits CKS2 to CKS0 in either TCR0 or TCR1 are set to B’100, the 8-bit timers of the two channels are cascaded. With this configuration, a single 16-bit timer could be used (16-bit timer mode) or compare matches of the 8-bit channel 0 could be counted by the timer of channel 1 (compare match counter mode). In this case, the timer operates as below.

16-Bit Counter Mode: When bits CKS2 to CKS0 in TCR0 are set to B'100, the timer functions as a single 16-bit timer with channel 0 occupying the upper 8 bits and channel 1 occupying the lower 8 bits.

- Setting of compare match flags
  - The CMF flag in TCSR0 is set to 1 when a 16-bit compare match event occurs.
  - The CMF flag in TCSR1 is set to 1 when a lower 8-bit compare match event occurs.
- Counter clear specification
  - If the CCLR1 and CCLR0 bits in TCR0 have been set for counter clear at compare match, the 16-bit counter (TCNT0 and TCNT1 together) is cleared when a 16-bit compare match event occurs. The 16-bit counter (TCNT0 and TCNT1 together) is cleared even if counter clear by the TMRI0 pin has also been set.
  - The settings of the CCLR1 and CCLR0 bits in TCR1 are ignored. The lower 8 bits cannot be cleared independently.
- Pin output
  - Control of output from the TMO0 pin by bits OS3 to OS0 in TCSR0 is in accordance with the 16-bit compare match conditions.
  - Control of output from the TMO1 pin by bits OS3 to OS0 in TCSR1 is in accordance with the lower 8-bit compare match conditions.

Compare Match Counter Mode: When bits CKS2 to CKS0 in TCR1 are B'100, TCNT1 counts compare match A’s for channel 0.

Channels 0 and 1 are controlled independently. Conditions such as setting of the CMF flag, generation of interrupts, output from the TMO pin, and counter clear are in accordance with the settings for each channel.

Note on Usage: If the 16-bit counter mode and compare match counter mode are set simultaneously, the input clock pulses for TCNT0 and TCNT1 are not generated and thus the counters will stop operating. Software should therefore avoid using both these modes.

12.4 Interrupts

12.4.1 Interrupt Sources and DTC Activation

There are three 8-bit timer interrupt sources: CMIA, CMIB, and OVI. Their relative priorities are shown in table 12-3. Each interrupt source is set as enabled or disabled by the corresponding interrupt enable bit in TCR, and independent interrupt requests are sent for each to the interrupt controller. It is also possible to activate the DTC by means of CMIA and CMIB interrupts.

Table 12-3 8-Bit Timer Interrupt Sources

Channel	Interrupt Source	Description	DTC Activation	Priority
0	CMIA0	Interrupt by CMFA	Possible	High
	CMIB0	Interrupt by CMFB	Possible	↑
	OVI0	Interrupt by OVF	Not possible	
1	CMIA1	Interrupt by CMFA	Possible	
	CMIB1	Interrupt by CMFB	Possible	
	OVI1	Interrupt by OVF	Not possible	Low

Note: This table shows the initial state immediately after a reset. The relative channel priorities can be changed by the interrupt controller.

12.4.2 A/D Converter Activation

The A/D converter can be activated only by channel 0 compare match A.

If the ADTE bit in TCSR0 is set to 1 when the CMFA flag is set to 1 by the occurrence of channel 0 compare match A, a request to start A/D conversion is sent to the A/D converter. If the 8-bit timer conversion start trigger has been selected on the A/D converter side at this time, A/D conversion is started.

12.5 Sample Application

In the example below, the 8-bit timer is used to generate a pulse output with a selected duty cycle, as shown in figure 12-9. The control bits are set as follows:

[1] In TCR, bit CCLR1 is cleared to 0 and bit CCLR0 is set to 1 so that the timer counter is cleared when its value matches the constant in TCORA.

[2] In TCSR, bits OS3 to OS0 are set to B'0110, causing the output to change to 1 at a TCORA compare match and to 0 at a TCORB compare match.

With these settings, the 8-bit timer provides output of pulses at a rate determined by TCORA with a pulse width determined by TCORB. No software intervention is required.

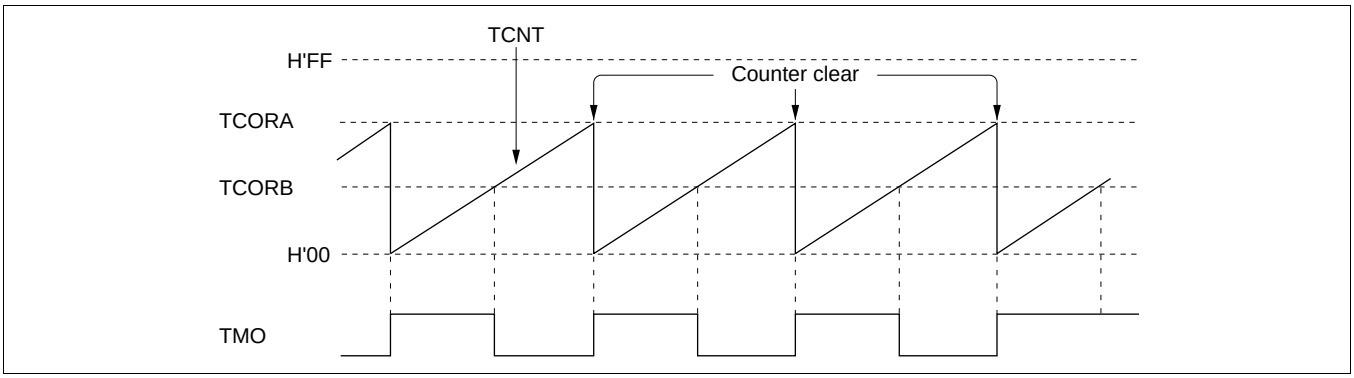

Figure 12-9 Example of Pulse Output

12.6 Usage Notes

Application programmers should note that the following kinds of contention can occur in the 8-bit timer.

12.6.1 Contention between TCNT Write and Clear

If a timer counter clock pulse is generated during the T_2 state of a TCNT write cycle, the clear takes priority, so that the counter is cleared and the write is not performed.

Figure 12-10 shows this operation.

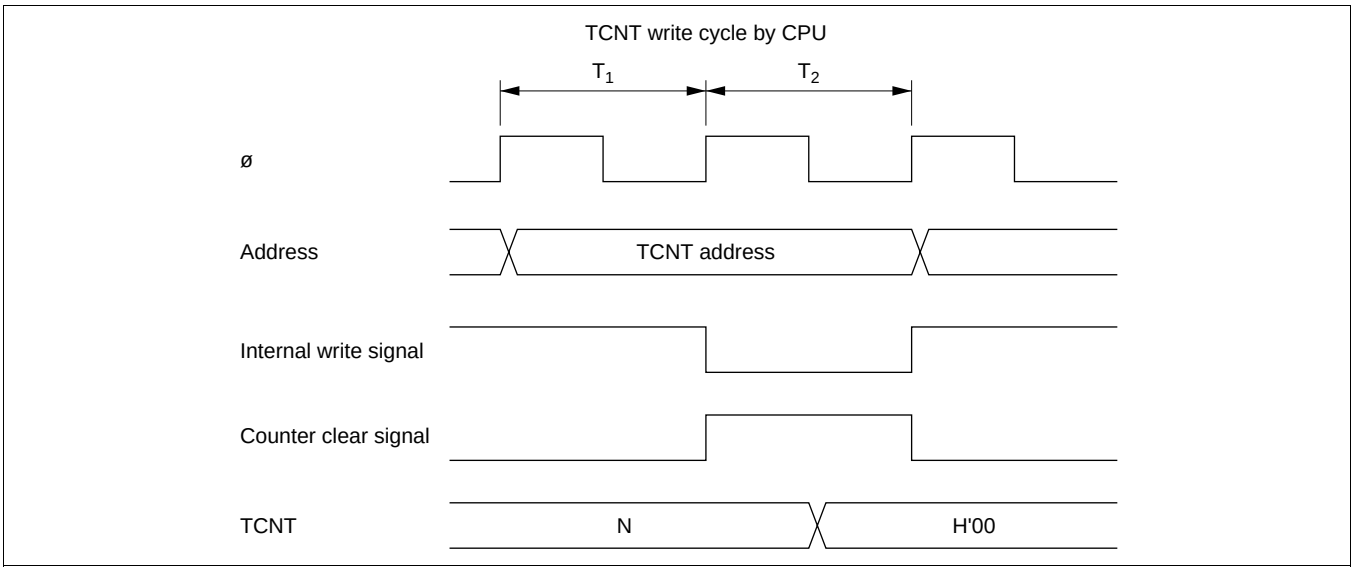

Figure 12-10 Contention between TCNT Write and Clear

12.6.2 Contention between TCNT Write and Increment

If a timer counter clock pulse is generated during the T_2 state of a TCNT write cycle, the write takes priority and the counter is not incremented.

Figure 12-11 shows this operation.

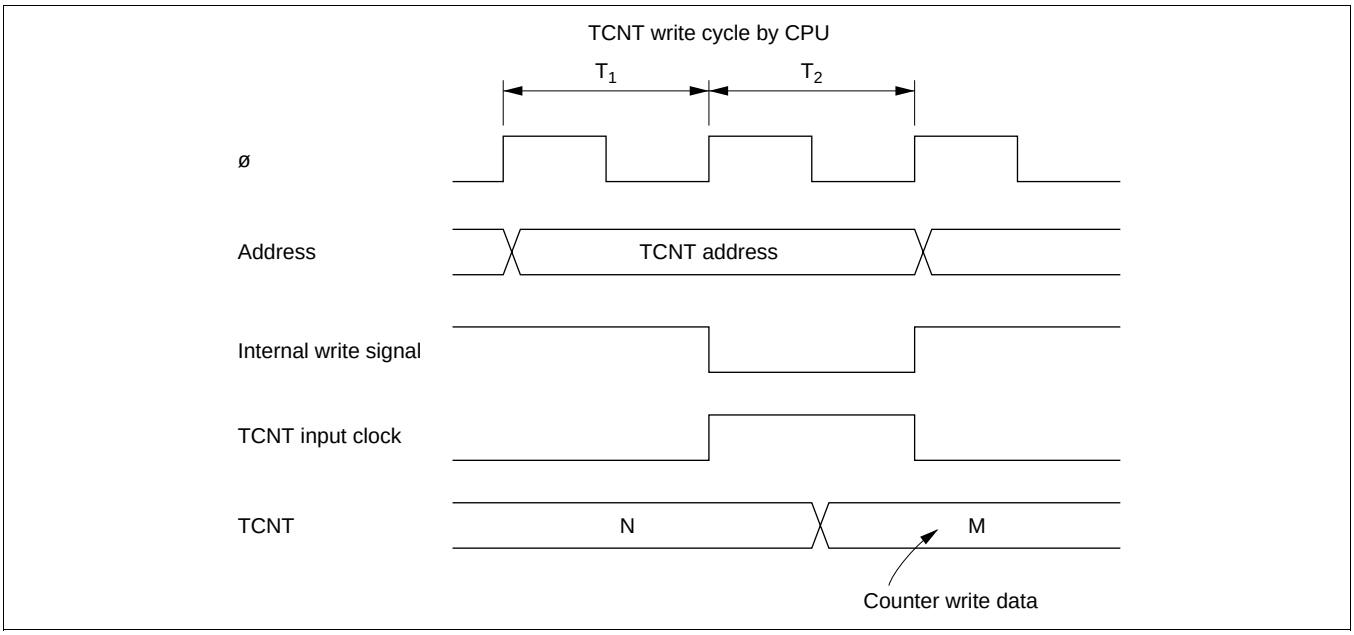

Figure 12-11 Contention between TCNT Write and Increment

12.6.3 Contention between TCOR Write and Compare Match

During the T_2 state of a TCOR write cycle, the TCOR write has priority and the compare match signal is disabled even if a compare match event occurs.

Figure 12-12 shows this operation.

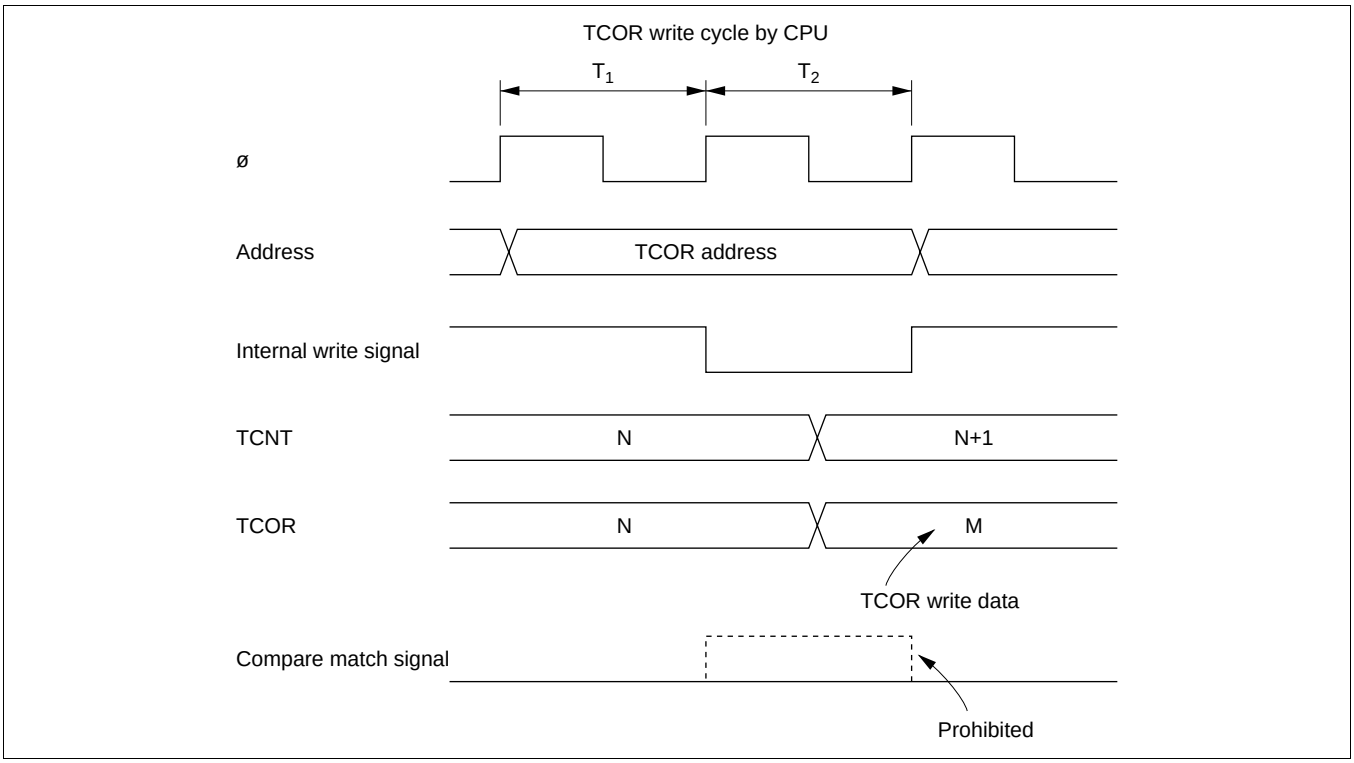

Figure 12-12 Contention between TCOR Write and Compare Match

12.6.4 Contention between Compare Matches A and B

If compare match events A and B occur at the same time, the 8-bit timer operates in accordance with the priorities for the output statuses set for compare match A and compare match B, as shown in table 12-4.

Table 12-4 Timer Output Priorities

Output Setting	Priority
Toggle output	High
1 output	↑
0 output	
No change	Low

12.6.5 Switching of Internal Clocks and TCNT Operation

TCNT may increment erroneously when the internal clock is switched over. Table 12-5 shows the relationship between the timing at which the internal clock is switched (by writing to the CKS1 and CKS0 bits) and the TCNT operation.

When the TCNT clock is generated from an internal clock, the falling edge of the internal clock pulse is detected. If clock switching causes a change from high to low level, as shown in case 3 in table 12-5, a TCNT clock pulse is generated on the assumption that the switchover is a falling edge. This increments TCNT.

The erroneous incrementation can also happen when switching between internal and external clocks.

Table 12-5 Switching of Internal Clock and TCNT Operation

No.	Timing of Switchover by Means of CKS1 and CKS0 Bits	TCNT Clock Operation
1	Switching from low to low*1	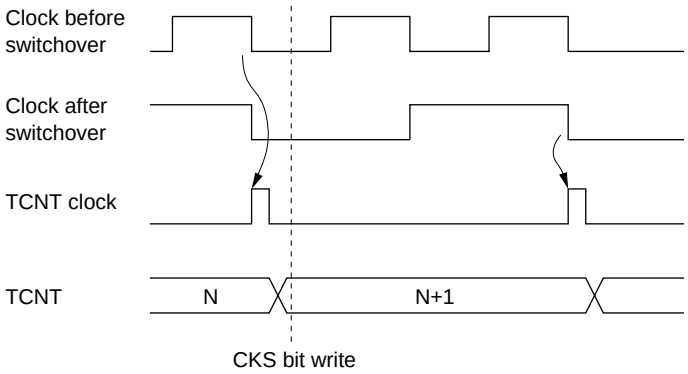
2	Switching from low to high*2	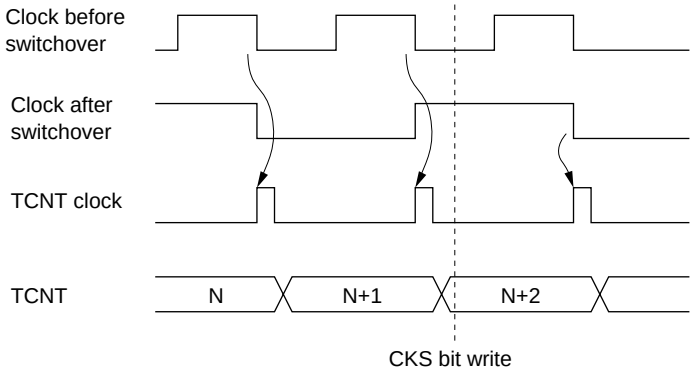
3	Switching from high to low*3	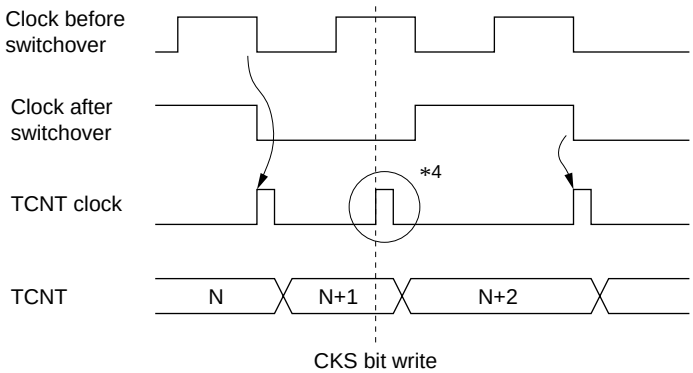

No.	Timing of Switchover by Means of CKS1 and CKS0 Bits	TCNT Clock Operation
4	Switching from high to high	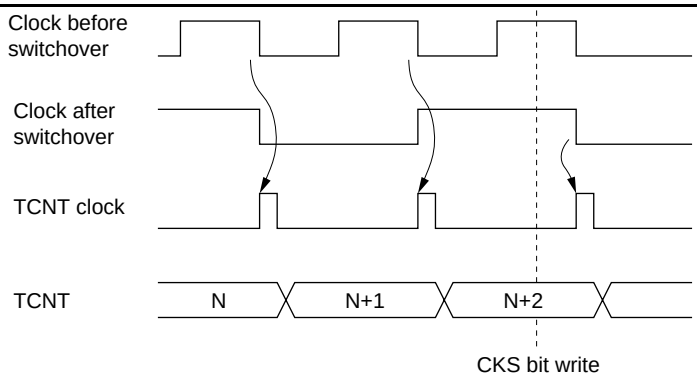

Notes: 1. Includes switching from low to stop, and from stop to low.
2. Includes switching from stop to high.
3. Includes switching from high to stop.
4. Generated on the assumption that the switchover is a falling edge; TCNT is incremented.

12.6.6 Interrupts and Module Stop Mode

If module stop mode is entered when an interrupt has been requested, it will not be possible to clear the CPU interrupt source or the DMAC or DTC activation source. Interrupts should therefore be disabled before entering module stop mode.

Section 13 Watchdog Timer

13.1 Overview

The H8S/2357 Group has a single-channel on-chip watchdog timer (WDT) for monitoring system operation. The WDT outputs an overflow signal ($\overline{\text{WDTOVF}}$) if a system crash prevents the CPU from writing to the timer counter, allowing it to overflow. At the same time, the WDT can also generate an internal reset signal for the H8S/2357 Group.

When this watchdog function is not needed, the WDT can be used as an interval timer. In interval timer operation, an interval timer interrupt is generated each time the counter overflows.

13.1.1 Features

WDT features are listed below.

- Switchable between watchdog timer mode and interval timer mode
- $\overline{\text{WDTOVF}}$ output when in watchdog timer mode*[1]
  If the counter overflows, the WDT outputs $\overline{\text{WDTOVF}}$. It is possible to select whether or not the entire H8S/2357 Group is reset at the same time. This internal reset can be a power-on reset or a manual reset.*[2]
- Interrupt generation when in interval timer mode
  If the counter overflows, the WDT generates an interval timer interrupt.
- Choice of eight counter clock sources.

Notes: 1. The $\overline{\text{WDTOVF}}$ pin function is not available in the F-ZTAT versions, and the H8S/2398, H8S/2394, H8S/2392, and H8S/2390.
2. Manual reset is only supported in the H8S/2357 ZTAT.

13.1.2 Block Diagram

Figure 13-1 shows a block diagram of the WDT.

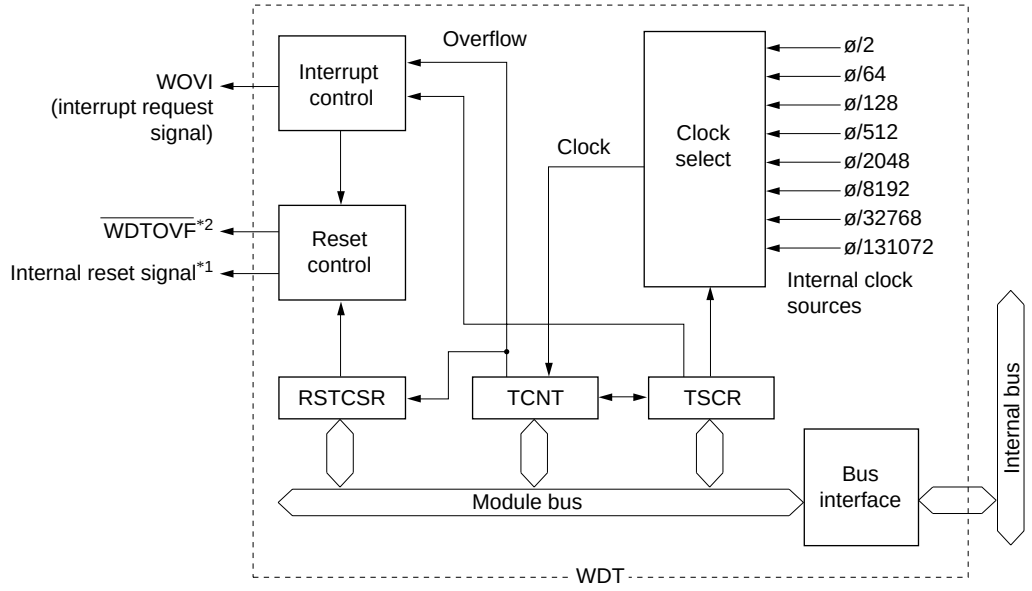

Legend:
TCSR: Timer control/status register
TCNT: Timer counter
RSTCSR: Reset control/status register

Notes: 1. The type of internal reset signal depends on a register setting. Either power-on reset or manual reset can be selected. Manual reset is only supported in the H8S/2357 ZTAT.
2. The $\overline{\text{WDTOVF}}$ pin function is not available in the F-ZTAT version, the H8S/2398, H8S/2394, H8S/2392, or H8S/2390.

Figure 13-1 Block Diagram of WDT

13.1.3 Pin Configuration

Table 13-1 describes the WDT output pin.

Table 13-1 WDT Pin

Name	Symbol	I/O	Function
Watchdog timer overflow	$\overline{\text{WDTOVF}}$*	Output	Outputs counter overflow signal in watchdog timer mode

Note: * The $\overline{\text{WDTOVF}}$ pin function is not available in the F-ZTAT version, the H8S/2398, H8S/2394, H8S/2392 or H8S/2390.

13.1.4 Register Configuration

The WDT has three registers, as summarized in table 13-2. These registers control clock selection, WDT mode switching, and the reset signal.

Table 13-2 WDT Registers

				Address*[1]	
Name	**Abbreviation**	**R/W**	**Initial Value**	**Write*[2]**	**Read**
Timer control/status register	TCSR	R/(W)*[3]	H'18	H'FFBC	H'FFBC
Timer counter	TCNT	R/W	H'00	H'FFBC	H'FFBD
Reset control/status register	RSTCSR	R/(W)*[3]	H'1F	H'FFBE	H'FFBF

Notes: 1. Lower 16 bits of the address.
2. For details of write operations, see section 13.2.4, Notes on Register Access.
3. Only a write of 0 is permitted to bit 7, to clear the flag.

13.2 Register Descriptions

13.2.1 Timer Counter (TCNT)

Bit :	7	6	5	4	3	2	1	0
Initial value :	0	0	0	0	0	0	0	0
R/W :	R/W	R/W	R/W	R/W	R/W	R/W	R/W	R/W

TCNT is an 8-bit readable/writable*[1] up-counter.

When the TME bit is set to 1 in TCSR, TCNT starts counting pulses generated from the internal clock source selected by bits CKS2 to CKS0 in TCSR. When the count overflows (changes from H'FF to H'00), either the watchdog timer overflow signal ($\overline{\text{WDTOVF}}$)*[2] or an interval timer interrupt (WOVI) is generated, depending on the mode selected by the WT/$\overline{\text{IT}}$ bit in TCSR.

TCNT is initialized to H'00 by a reset, in hardware standby mode, or when the TME bit is cleared to 0. It is not initialized in software standby mode.

Notes: 1. TCNT is write-protected by a password to prevent accidental overwriting. For details see section 13.2.4, Notes on Register Access.
2. The $\overline{\text{WDTOVF}}$ pin function is not available in the F-ZTAT version, the H8S/2398, H8S/2394, H8S/2392 or H8S/2390.

13.2.2 Timer Control/Status Register (TCSR)

Bit :	7	6	5	4	3	2	1	0
	OVF	WT/$\overline{\text{IT}}$	TME	—	—	CKS2	CKS1	CKS0
Initial value :	0	0	0	1	1	0	0	0
R/W :	R/(W)*	R/W	R/W	—	—	R/W	R/W	R/W

Note: * Can only be written with 0 for flag clearing.

TCSR is an 8-bit readable/writable* register. Its functions include selecting the clock source to be input to TCNT, and the timer mode.

TCR is initialized to H'18 by a reset and in hardware standby mode. It is not initialized in software standby mode.

Note: * TCSR is write-protected by a password to prevent accidental overwriting. For details see section 13.2.4, Notes on Register Access.

Bit 7—Overflow Flag (OVF): Indicates that TCNT has overflowed from H'FF to H'00, when in interval timer mode. This flag cannot be set during watchdog timer operation.

Bit 7 OVF	Description
0	[Clearing condition] Cleared by reading TCSR when OVF = 1, then writing 0 to OVF (Initial value)
1	[Setting condition] Set when TCNT overflows (changes from H'FF to H'00) in interval timer mode

Bit 6—Timer Mode Select (WT/$\overline{\text{IT}}$): Selects whether the WDT is used as a watchdog timer or interval timer. If used as an interval timer, the WDT generates an interval timer interrupt request (WOVI) when TCNT overflows. If used as a watchdog timer, the WDT generates the $\overline{\text{WDTOVF}}$ signal*[1] when TCNT overflows.

Bit 6 WT/$\overline{\text{IT}}$	Description
0	Interval timer: Sends the CPU an interval timer interrupt request (WOVI) when TCNT overflows (Initial value)
1	Watchdog timer: Generates the $\overline{\text{WDTOVF}}$ signal*[1] when TCNT overflows*[2]

Notes: 1. The $\overline{\text{WDTOVF}}$ pin function is not available in the F-ZTAT version, the H8S/2398, H8S/2394, H8S/2392 or H8S/2390.
2. For details of the case where TCNT overflows in watchdog timer mode, see section 13.2.3, Reset Control/Status Register (RSTCSR).

Bit 5—Timer Enable (TME): Selects whether TCNT runs or is halted.

Bit 5 TME	Description
0	TCNT is initialized to H'00 and halted (Initial value)
1	TCNT counts

Bits 4 and 3—Reserved: These bits cannot be modified and are always read as 1.

Bits 2 to 0—Clock Select 2 to 0 (CKS2 to CKS0): These bits select one of eight internal clock sources, obtained by dividing the system clock (ø), for input to TCNT.

			Description	
Bit 2 CKS2	**Bit 1 CKS1**	**Bit 0 CKS0**	**Clock**	**Overflow Period (when ø = 20 MHz)***
0	0	0	ø/2 (Initial value)	25.6 µs
		1	ø/64	819.2 µs
	1	0	ø/128	1.6 ms
		1	ø/512	6.6 ms
1	0	0	ø/2048	26.2 ms
		1	ø/8192	104.9 ms
	1	0	ø/32768	419.4 ms
		1	ø/131072	1.68 s

Note: * The overflow period is the time from when TCNT starts counting up from H'00 until overflow occurs.

13.2.3 Reset Control/Status Register (RSTCSR)

Bit :	7	6	5	4	3	2	1	0
	WOVF	RSTE	RSTS	—	—	—	—	—
Initial value :	0	0	0	1	1	1	1	1
R/W :	R/(W)*	R/W	R/W	—	—	—	—	—

Note: * Can only be written with 0 for flag clearing.

RSTCSR is an 8-bit readable/writable* register that controls the generation of the internal reset signal when TCNT overflows, and selects the type of internal reset signal.

RSTCSR is initialized to H'1F by a reset signal from the $\overline{\text{RES}}$ pin, but not by the WDT internal reset signal caused by overflows.

Note: * RSTCSR is write-protected by a password to prevent accidental overwriting. For details see section 13.2.4, Notes on Register Access.

Bit 7—Watchdog Overflow Flag (WOVF): Indicates that TCNT has overflowed (changed from H'FF to H'00) during watchdog timer operation. This bit is not set in interval timer mode.

Bit 7 WOVF	Description	
0	[Clearing condition] Cleared by reading RSTCSR when WOVF = 1, then writing 0 to WOVF	(Initial value)
1	[Setting condition] Set when TCNT overflows (changed from H'FF to H'00) during watchdog timer operation	

Bit 6—Reset Enable (RSTE): Specifies whether or not a reset signal is generated in the H8S/2357 Group if TCNT overflows during watchdog timer operation.

Bit 6 RSTE	Description	
0	Reset signal is not generated if TCNT overflows*	(Initial value)
1	Reset signal is generated if TCNT overflows	

Note: * The modules within the H8S/2357 Group are not reset, but TCNT and TCSR within the WDT are reset.

Bit 5—Reset Select (RSTS): Selects the type of internal reset generated if TCNT overflows during watchdog timer operation.

For details of the types of resets, see section 4, Exception Handling.

Bit 5 RSTS	Description	
0	Power-on reset	(Initial value)
1	Manual reset*	

Note: * Manual reset is supported only in the H8S/2357 ZTAT. In the models except the H8S/2357 ZTAT, only 0 should be written to this bit.

Bits 4 to 0—Reserved: These bits cannot be modified and are always read as 1.

13.2.4 Notes on Register Access

The watchdog timer's TCNT, TCSR, and RSTCSR registers differ from other registers in being more difficult to write to. The procedures for writing to and reading these registers are given below.

Writing to TCNT and TCSR: These registers must be written to by a word transfer instruction. They cannot be written to with byte instructions.

Figure 13-2 shows the format of data written to TCNT and TCSR. TCNT and TCSR both have the same write address. For a write to TCNT, the upper byte of the written word must contain H'5A and the lower byte must contain the write data. For a write to TCSR, the upper byte of the written word must contain H'A5 and the lower byte must contain the write data. This transfers the write data from the lower byte to TCNT or TCSR.

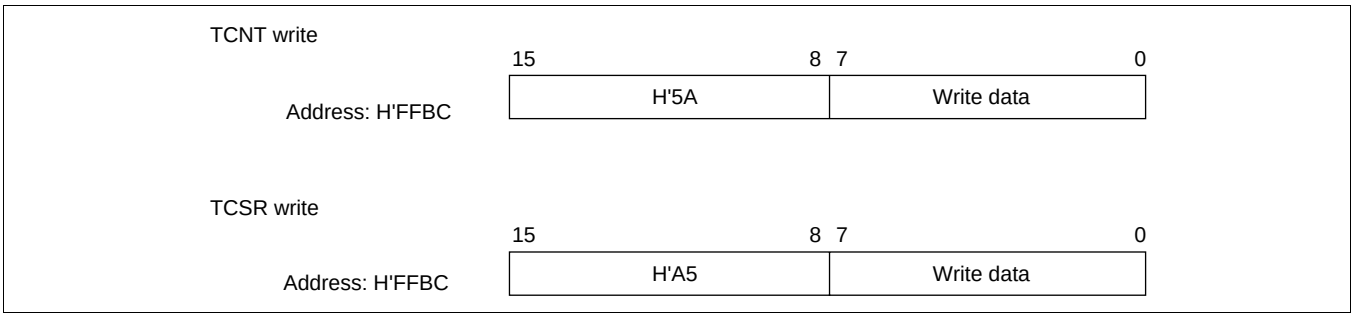

Figure 13-2 Format of Data Written to TCNT and TCSR

Writing to RSTCSR: RSTCSR must be written to by word transfer instruction to address H'FFBE. It cannot be written to with byte instructions.

Figure 13-3 shows the format of data written to RSTCSR. The method of writing 0 to the WOVF bit differs from that for writing to the RSTE and RSTS bits.

To write 0 to the WOVF bit, the write data must have H'A5 in the upper byte and H'00 in the lower byte. This clears the WOVF bit to 0, but has no effect on the RSTE and RSTS bits. To write to the RSTE and RSTS bits, the upper byte must contain H'5A and the lower byte must contain the write data. This writes the values in bits 6 and 5 of the lower byte into the RSTE and RSTS bits, but has no effect on the WOVF bit.

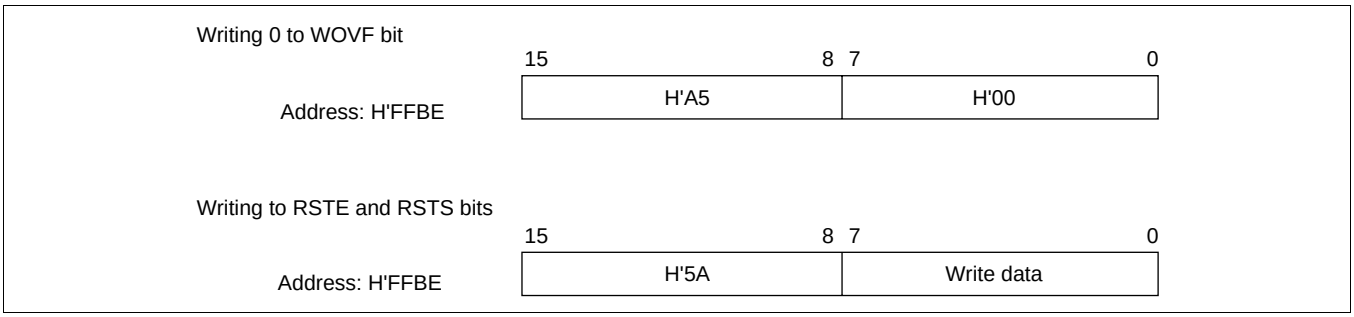

Figure 13-3 Format of Data Written to RSTCSR

Reading TCNT, TCSR, and RSTCSR: These registers are read in the same way as other registers. The read addresses are H'FFBC for TCSR, H'FFBD for TCNT, and H'FFBF for RSTCSR.

13.3 Operation

13.3.1 Watchdog Timer Operation

To use the WDT as a watchdog timer, set the WT/$\overline{\text{IT}}$ and TME bits to 1. Software must prevent TCNT overflows by rewriting the TCNT value (normally be writing H'00) before overflows occurs. This ensures that TCNT does not overflow while the system is operating normally. If TCNT overflows without being rewritten because of a system crash or other error, the $\overline{\text{WDTOVF}}$ signal*[1] is output. This is shown in figure 13-4. This $\overline{\text{WDTOVF}}$ signal*[1] can be used to reset the system. The $\overline{\text{WDTOVF}}$ signal*[1] is output for 132 states when RSTE = 1, and for 130 states when RSTE = 0.

If TCNT overflows when 1 is set in the RSTE bit in RSTCSR, a signal that resets the H8S/2357 Group internally is generated at the same time as the $\overline{\text{WDTOVF}}$ signal*[1]. This reset can be selected as a power-on reset or a manual reset*[2], depending on the setting of the RSTS bit in RSTCSR. The internal reset signal is output for 518 states.

If a reset caused by a signal input to the $\overline{\text{RES}}$ pin occurs at the same time as a reset caused by a WDT overflow, the $\overline{\text{RES}}$ pin reset has priority and the WOVF bit in RSTCSR is cleared to 0.

Notes: 1. In the F-ZTAT version, the H8S/2398, H8S/2394, H8S/2392, or H8S/2390, the $\overline{\text{WDTOVF}}$ pin function is not available.
2. Manual reset is only supported in the H8S/2357 ZTAT.

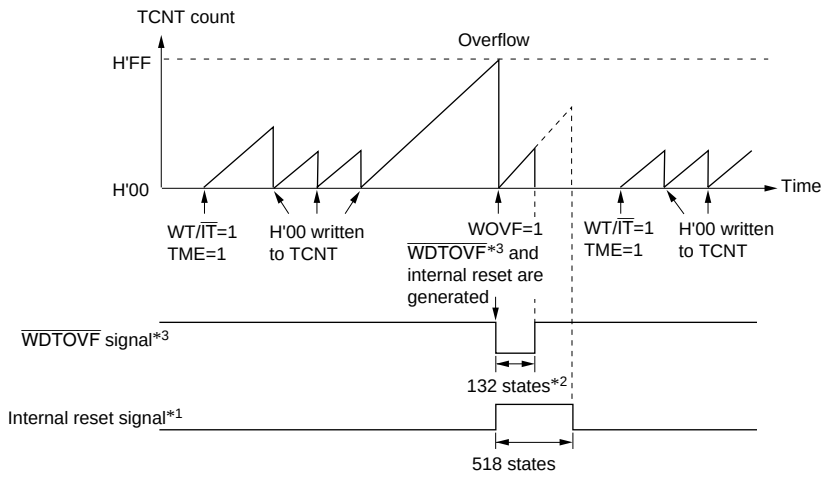

Legend:
WT/$\overline{\text{IT}}$: Timer mode select bit
TME: Timer enable bit

Notes: 1. The internal reset signal is generated only if the RSTE bit is set to 1.
2. 130 states when the RSTE bit is cleared to 0.
3. The $\overline{\text{WDTOVF}}$ pin function is not available in the F-ZTAT version, the H8S/2398, H8S/2394, H8S/2392, or H8S/2390.

Figure 13-4 Watchdog Timer Operation

13.3.2 Interval Timer Operation

To use the WDT as an interval timer, clear the WT/$\overline{\text{IT}}$ bit in TCSR to 0 and set the TME bit to 1. An interval timer interrupt (WOVI) is generated each time TCNT overflows, provided that the WDT is operating as an interval timer, as shown in figure 13-5. This function can be used to generate interrupt requests at regular intervals.

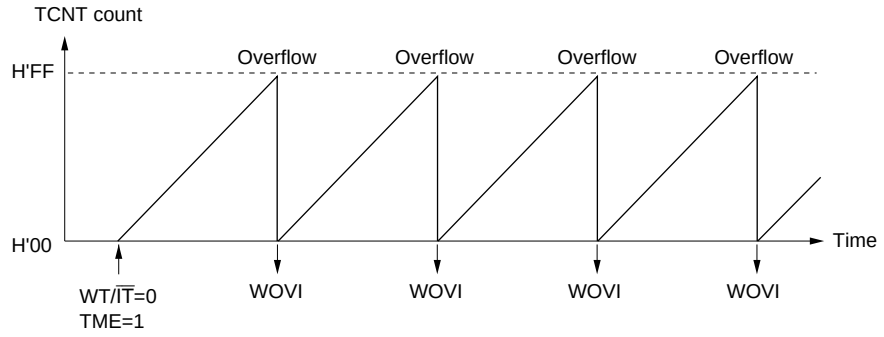

Legend:
WOVI: Interval timer interrupt request generation

Figure 13-5 Interval Timer Operation

13.3.3 Timing of Setting Overflow Flag (OVF)

The OVF flag is set to 1 if TCNT overflows during interval timer operation. At the same time, an interval timer interrupt (WOVI) is requested. This timing is shown in figure 13-6.

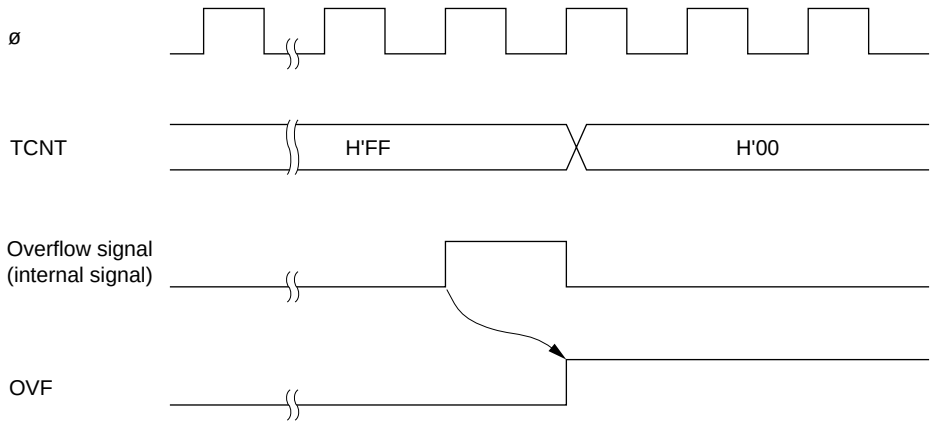

Figure 13-6 Timing of Setting of OVF

13.3.4 Timing of Setting of Watchdog Timer Overflow Flag (WOVF)

The WOVF flag is set to 1 if TCNT overflows during watchdog timer operation. At the same time, the $\overline{\text{WDTOVF}}$ signal* goes low. If TCNT overflows while the RSTE bit in RSTCSR is set to 1, an internal reset signal is generated for the entire H8S/2357 Group chip. Figure 13-7 shows the timing in this case.

Note: * The $\overline{\text{WDTOVF}}$ pin function is not available in the F-ZTAT version, the H8S/2398, H8S/2394, H8S/2392, or H8S/2390.

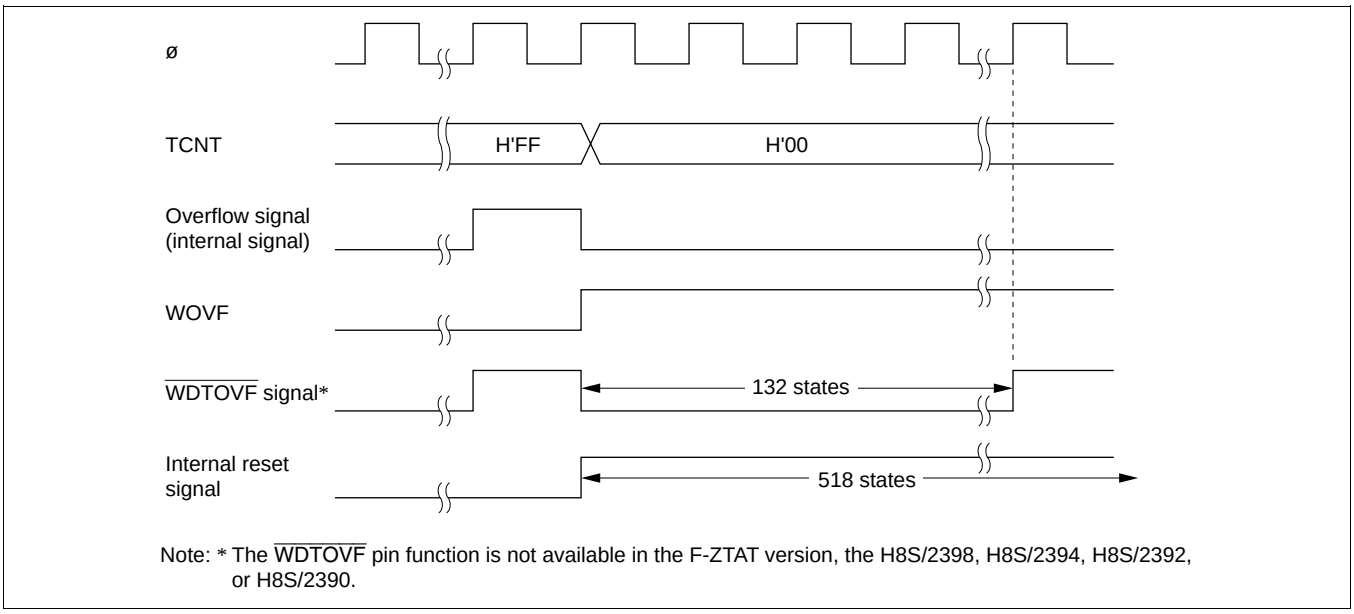

Figure 13-7 Timing of Setting of WOVF

13.4 Interrupts

During interval timer mode operation, an overflow generates an interval timer interrupt (WOVI). The interval timer interrupt is requested whenever the OVF flag is set to 1 in TCSR.

13.5 Usage Notes

13.5.1 Contention between Timer Counter (TCNT) Write and Increment

If a timer counter clock pulse is generated during the T_2 state of a TCNT write cycle, the write takes priority and the timer counter is not incremented. Figure 13-8 shows this operation.

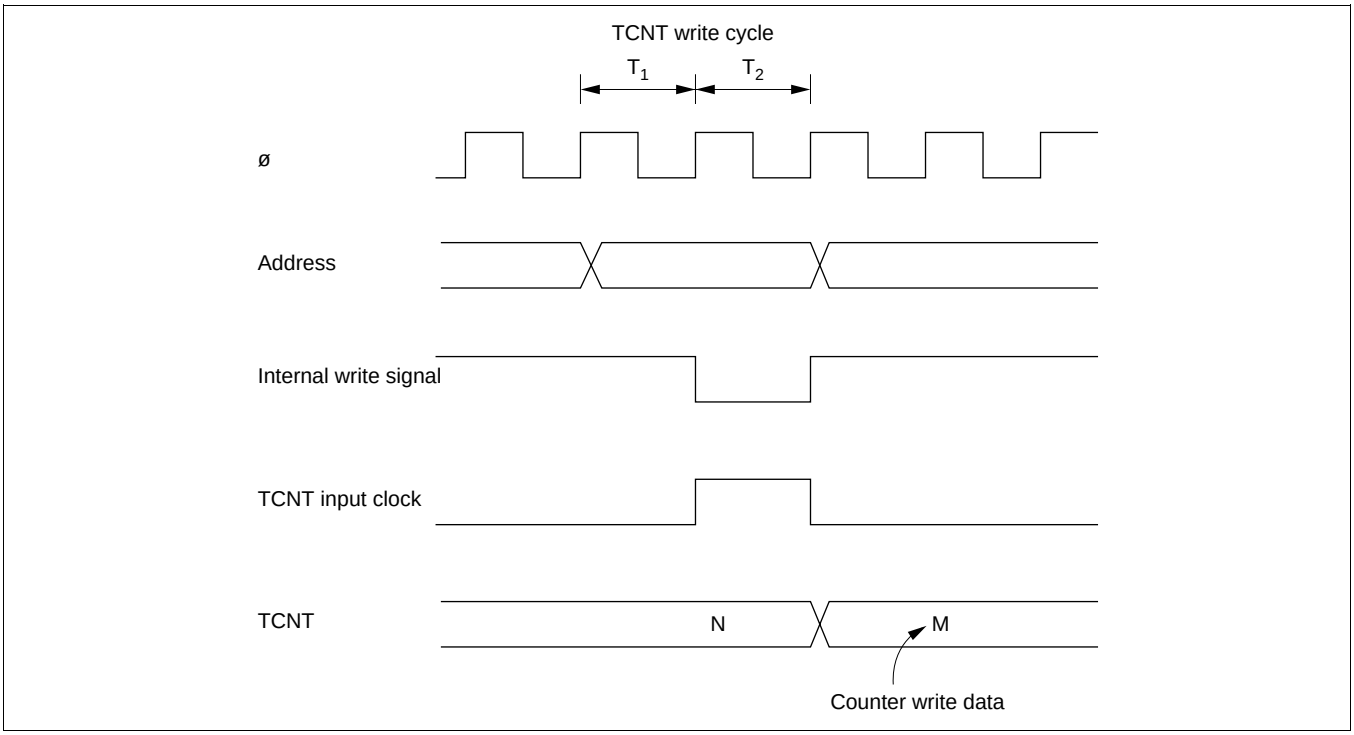

Figure 13-8 Contention between TCNT Write and Increment

13.5.2 Changing Value of CKS2 to CKS0

If bits CKS2 to CKS0 in TCSR are written to while the WDT is operating, errors could occur in the incrementation. Software must stop the watchdog timer (by clearing the TME bit to 0) before changing the value of bits CKS2 to CKS0.

13.5.3 Switching between Watchdog Timer Mode and Interval Timer Mode

If the mode is switched from watchdog timer to interval timer, or vice versa, while the WDT is operating, errors could occur in the incrementation. Software must stop the watchdog timer (by clearing the TME bit to 0) before switching the mode.

13.5.4 System Reset by $\overline{\text{WDTOVF}}$ Signal

If the $\overline{\text{WDTOVF}}$ output signal* is input to the $\overline{\text{RES}}$ pin of the H8S/2357 Group, the H8S/2357 Group will not be initialized correctly. Make sure that the $\overline{\text{WDTOVF}}$ signal* is not input logically to the $\overline{\text{RES}}$ pin. To reset the entire system by means of the $\overline{\text{WDTOVF}}$ signal*, use the circuit shown in figure 13-9.

Note: * The $\overline{\text{WDTOVF}}$ pin function is not available in the F-ZTAT version, the H8S/2398, H8S/2394, H8S/2392 or H8S/2390.

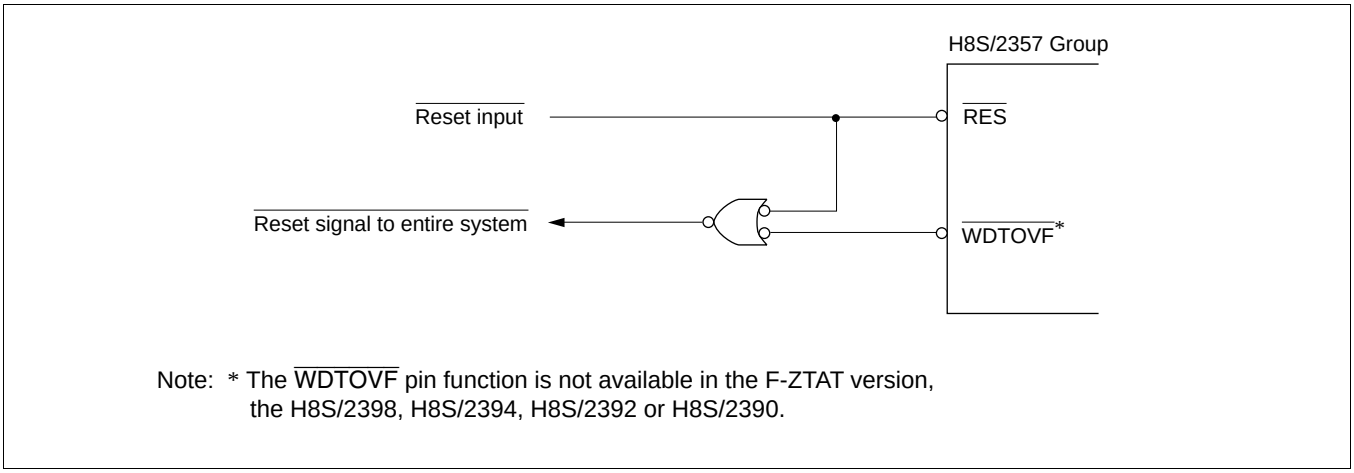

Figure 13-9 Circuit for System Reset by $\overline{\text{WDTOVF}}$ Signal (Example)

13.5.5 Internal Reset in Watchdog Timer Mode

The H8S/2357 Group is not reset internally if TCNT overflows while the RSTE bit is cleared to 0 during watchdog timer operation, but TCNT and TSCR of the WDT are reset.

TCNT, TCSR, and RSTCR cannot be written to while the $\overline{\text{WDTOVF}}$ signal* is low. Also note that a read of the WOVF flag is not recognized during this period. To clear the WOVF falg, therefore, read RSTCSR after the $\overline{\text{WDTOVF}}$ signal* goes high, then write 0 to the WOVF flag.

Note: * The $\overline{\text{WDTOVF}}$ pin function is not available in the F-ZTAT version, the H8S/2398, H8S/2394, H8S/2392 or H8S/2390.

Section 14 Serial Communication Interface (SCI)

14.1 Overview

The H8S/2357 Group is equipped with a three-channel serial communication interface (SCI). All three channels have the same functions. The SCI can handle both asynchronous and clocked synchronous serial communication. A function is also provided for serial communication between processors (multiprocessor communication function).

14.1.1 Features

SCI features are listed below.

- Choice of asynchronous or clocked synchronous serial communication mode

  Asynchronous mode
  - — Serial data communication executed using asynchronous system in which synchronization is achieved character by character
  - — Serial data communication can be carried out with standard asynchronous communication chips such as a Universal Asynchronous Receiver/Transmitter (UART) or Asynchronous Communication Interface Adapter (ACIA)
  - — A multiprocessor communication function is provided that enables serial data communication with a number of processors
  - — Choice of 12 serial data transfer formats

    Data length : 7 or 8 bits
    Stop bit length : 1 or 2 bits
    Parity : Even, odd, or none
    Multiprocessor bit : 1 or 0
  - — Receive error detection : Parity, overrun, and framing errors
  - — Break detection : Break can be detected by reading the RxD pin level directly in case of a framing error

  Clocked Synchronous mode
  - — Serial data communication synchronized with a clock
  - — Serial data communication can be carried out with other chips that have a synchronous communication function
  - — One serial data transfer format

    Data length : 8 bits
  - — Receive error detection : Overrun errors detected

- Full-duplex communication capability
  - — The transmitter and receiver are mutually independent, enabling transmission and reception to be executed simultaneously
  - — Double-buffering is used in both the transmitter and the receiver, enabling continuous transmission and continuous reception of serial data

- Choice of LSB-first or MSB-first transfer
  - — Can be selected regardless of the communication mode* (except in the case of 7-bit data asynchronous mode)

- On-chip baud rate generator allows any bit rate to be selected

- Choice of serial clock source
  - — Internal clock from baud rate generator or external clock from SCK pin

- Four interrupt sources
  - Four interrupt sources — transmit-data-empty, transmit-end, receive-data-full, and receive error — that can issue requests independently
  - The transmit-data-empty interrupt and receive-data-full interrupt can activate the DMA controller (DMAC) or data transfer controller (DTC) to execute data transfer
- Module stop mode can be set
  - As the initial setting, SCI operation is halted. Register access is enabled by exiting module stop mode.

Note: * Descriptions in this section refer to LSB-first transfer.

14.1.2 Block Diagram

Figure 14-1 shows a block diagram of the SCI.

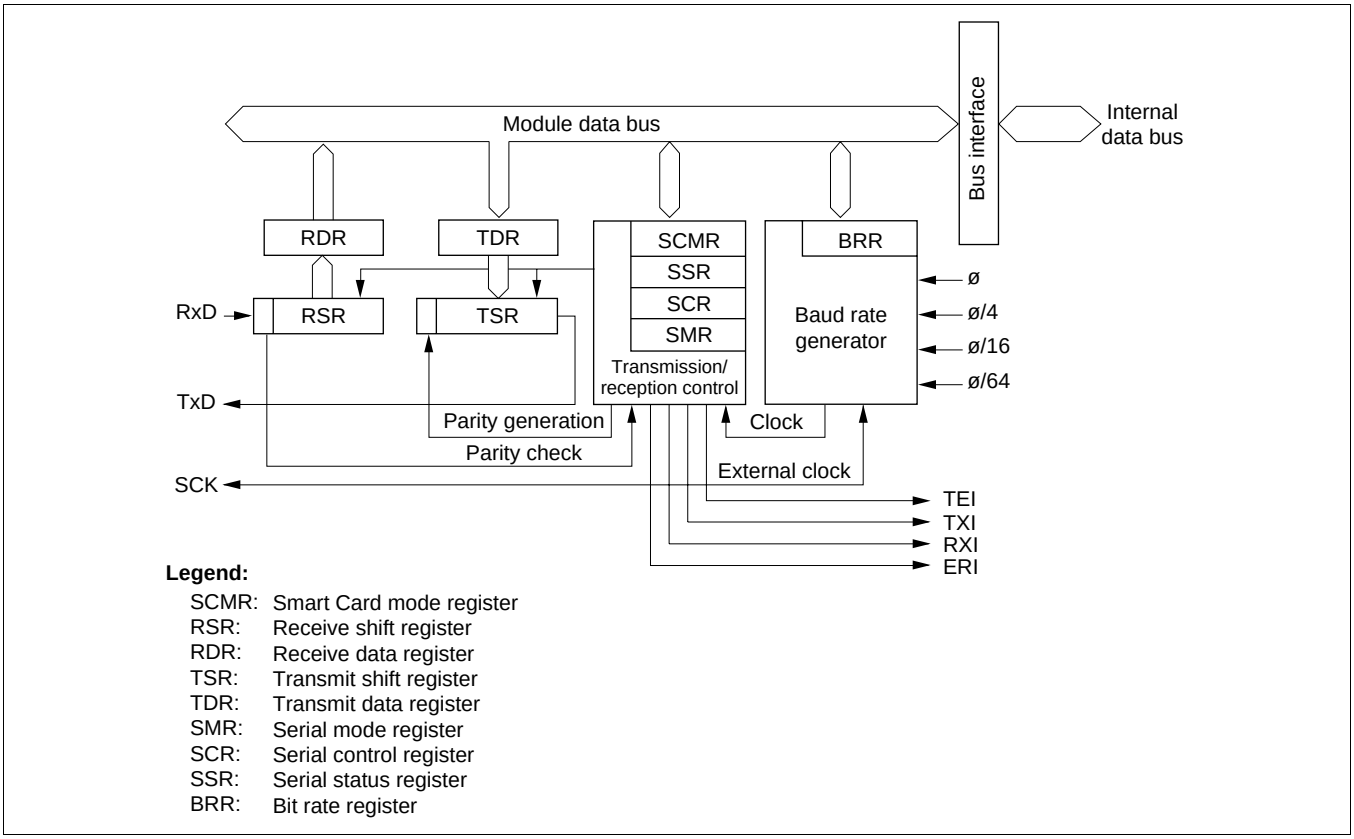

Figure 14-1 Block Diagram of SCI

14.1.3 Pin Configuration

Table 14-1 shows the serial pins for each SCI channel.

Table 14-1 SCI Pins

Channel	Pin Name	Symbol	I/O	Function
0	Serial clock pin 0	SCK0	I/O	SCI0 clock input/output
	Receive data pin 0	RxD0	Input	SCI0 receive data input
	Transmit data pin 0	TxD0	Output	SCI0 transmit data output
1	Serial clock pin 1	SCK1	I/O	SCI1 clock input/output
	Receive data pin 1	RxD1	Input	SCI1 receive data input
	Transmit data pin 1	TxD1	Output	SCI1 transmit data output
2	Serial clock pin 2	SCK2	I/O	SCI2 clock input/output
	Receive data pin 2	RxD2	Input	SCI2 receive data input
	Transmit data pin 2	TxD2	Output	SCI2 transmit data output

14.1.4 Register Configuration

The SCI has the internal registers shown in table 14-2. These registers are used to specify asynchronous mode or clocked synchronous mode, the data format, and the bit rate, and to control transmitter/receiver.

Table 14-2 SCI Registers

Channel	Name	Abbreviation	R/W	Initial Value	Address*[1]
0	Serial mode register 0	SMR0	R/W	H'00	H'FF78
	Bit rate register 0	BRR0	R/W	H'FF	H'FF79
	Serial control register 0	SCR0	R/W	H'00	H'FF7A
	Transmit data register 0	TDR0	R/W	H'FF	H'FF7B
	Serial status register 0	SSR0	R/(W)*[2]	H'84	H'FF7C
	Receive data register 0	RDR0	R	H'00	H'FF7D
	Smart Card mode register 0	SCMR0	R/W	H'F2	H'FF7E
1	Serial mode register 1	SMR1	R/W	H'00	H'FF80
	Bit rate register 1	BRR1	R/W	H'FF	H'FF81
	Serial control register 1	SCR1	R/W	H'00	H'FF82
	Transmit data register 1	TDR1	R/W	H'FF	H'FF83
	Serial status register 1	SSR1	R/(W)*[2]	H'84	H'FF84
	Receive data register 1	RDR1	R	H'00	H'FF85
	Smart Card mode register 1	SCMR1	R/W	H'F2	H'FF86
2	Serial mode register 2	SMR2	R/W	H'00	H'FF88
	Bit rate register 2	BRR2	R/W	H'FF	H'FF89
	Serial control register 2	SCR2	R/W	H'00	H'FF8A
	Transmit data register 2	TDR2	R/W	H'FF	H'FF8B
	Serial status register 2	SSR2	R/(W)*[2]	H'84	H'FF8C
	Receive data register 2	RDR2	R	H'00	H'FF8D
	Smart Card mode register 2	SCMR2	R/W	H'F2	H'FF8E
All	Module stop control register	MSTPCR	R/W	H'3FFF	H'FF3C

Notes: 1. Lower 16 bits of the address.
2. Can only be written with 0 for flag clearing.

14.2 Register Descriptions

14.2.1 Receive Shift Register (RSR)

Bit	:	7	6	5	4	3	2	1	0
R/W	:	—	—	—	—	—	—	—	—

RSR is a register used to receive serial data.

The SCI sets serial data input from the RxD pin in RSR in the order received, starting with the LSB (bit 0), and converts it to parallel data. When one byte of data has been received, it is transferred to RDR automatically.

RSR cannot be directly read or written to by the CPU.

14.2.2 Receive Data Register (RDR)

Bit	:	7	6	5	4	3	2	1	0
Initial value	:	0	0	0	0	0	0	0	0
R/W	:	R	R	R	R	R	R	R	R

RDR is a register that stores received serial data.

When the SCI has received one byte of serial data, it transfers the received serial data from RSR to RDR where it is stored, and completes the receive operation. After this, RSR is receive-enabled.

Since RSR and RDR function as a double buffer in this way, enables continuous receive operations to be performed.

RDR is a read-only register, and cannot be written to by the CPU.

RDR is initialized to H'00 by a reset, and in standby mode or module stop mode.

14.2.3 Transmit Shift Register (TSR)

Bit	:	7	6	5	4	3	2	1	0
R/W	:	—	—	—	—	—	—	—	—

TSR is a register used to transmit serial data.

To perform serial data transmission, the SCI first transfers transmit data from TDR to TSR, then sends the data to the TxD pin starting with the LSB (bit 0).

When transmission of one byte is completed, the next transmit data is transferred from TDR to TSR, and transmission started, automatically. However, data transfer from TDR to TSR is not performed if the TDRE bit in SSR is set to 1.

TSR cannot be directly read or written to by the CPU.

14.2.4 Transmit Data Register (TDR)

Bit :	7	6	5	4	3	2	1	0
Initial value :	1	1	1	1	1	1	1	1
R/W :	R/W	R/W	R/W	R/W	R/W	R/W	R/W	R/W

TDR is an 8-bit register that stores data for serial transmission.

When the SCI detects that TSR is empty, it transfers the transmit data written in TDR to TSR and starts serial transmission. Continuous serial transmission can be carried out by writing the next transmit data to TDR during serial transmission of the data in TSR.

TDR can be read or written to by the CPU at all times.

TDR is initialized to H'FF by a reset, and in standby mode or module stop mode.

14.2.5 Serial Mode Register (SMR)

Bit :	7	6	5	4	3	2	1	0
	C/$\overline{A}$	CHR	PE	O/$\overline{E}$	STOP	MP	CKS1	CKS0
Initial value :	0	0	0	0	0	0	0	0
R/W :	R/W	R/W	R/W	R/W	R/W	R/W	R/W	R/W

SMR is an 8-bit register used to set the SCI's serial transfer format and select the baud rate generator clock source.

SMR can be read or written to by the CPU at all times.

SMR is initialized to H'00 by a reset, and by putting the device in standby mode or module stop mode. In the H8S/2398, H8S/2394, H8S/2392, and H8S/2390, however, the value in SMR is initialized to H'00 by a reset, or in hardware standby mode, but SMR retains its current state when the device enters software standby mode or module stop mode.

Bit 7—Communication Mode (C/$\overline{A}$): Selects asynchronous mode or clocked synchronous mode as the SCI operating mode.

Bit 7 C/$\overline{A}$	Description	
0	Asynchronous mode	(Initial value)
1	Clocked synchronous mode	

Bit 6—Character Length (CHR): Selects 7 or 8 bits as the data length in asynchronous mode. In clocked synchronous mode, a fixed data length of 8 bits is used regardless of the CHR setting.

Bit 6 CHR	Description	
0	8-bit data	(Initial value)
1	7-bit data*	

Note: * When 7-bit data is selected, the MSB (bit 7) of TDR is not transmitted, and it is not possible to choose between LSB-first or MSB-first transfer.

Bit 5—Parity Enable (PE): In asynchronous mode, selects whether or not parity bit addition is performed in transmission, and parity bit checking in reception. In clocked synchronous mode and with a multiprocessor format, parity bit addition and checking is not performed, regardless of the PE bit setting.

Bit 5 PE	Description	
0	Parity bit addition and checking disabled	(Initial value)
1	Parity bit addition and checking enabled*	

Note:* When the PE bit is set to 1, the parity (even or odd) specified by the O/$\overline{E}$ bit is added to transmit data before transmission. In reception, the parity bit is checked for the parity (even or odd) specified by the O/$\overline{E}$ bit.

Bit 4—Parity Mode (O/$\overline{E}$): Selects either even or odd parity for use in parity addition and checking.

The O/$\overline{E}$ bit setting is only valid when the PE bit is set to 1, enabling parity bit addition and checking, in asynchronous mode. The O/$\overline{E}$ bit setting is invalid in clocked synchronous mode, and when parity addition and checking is disabled in asynchronous mode.

Bit 4 O/$\overline{E}$	Description	
0	Even parity*[1]	(Initial value)
1	Odd parity*[2]	

Notes: 1. When even parity is set, parity bit addition is performed in transmission so that the total number of 1 bits in the transmit character plus the parity bit is even.
In reception, a check is performed to see if the total number of 1 bits in the receive character plus the parity bit is even.
2. When odd parity is set, parity bit addition is performed in transmission so that the total number of 1 bits in the transmit character plus the parity bit is odd.
In reception, a check is performed to see if the total number of 1 bits in the receive character plus the parity bit is odd.

Bit 3—Stop Bit Length (STOP): Selects 1 or 2 bits as the stop bit length in asynchronous mode. The STOP bits setting is only valid in asynchronous mode. If clocked synchronous mode is set the STOP bit setting is invalid since stop bits are not added.

Bit 3 STOP	Description	
0	1 stop bit: In transmission, a single 1 bit (stop bit) is added to the end of a transmit character before it is sent.	(Initial value)
1	2 stop bits: In transmission, two 1 bits (stop bits) are added to the end of a transmit character before it is sent.	

In reception, only the first stop bit is checked, regardless of the STOP bit setting. If the second stop bit is 1, it is treated as a stop bit; if it is 0, it is treated as the start bit of the next transmit character.

Bit 2—Multiprocessor Mode (MP): Selects multiprocessor format. When multiprocessor format is selected, the PE bit and O/$\overline{E}$ bit parity settings are invalid. The MP bit setting is only valid in asynchronous mode; it is invalid in clocked synchronous mode.

For details of the multiprocessor communication function, see section 14.3.3, Multiprocessor Communication Function.

Bit 2 MP	Description	
0	Multiprocessor function disabled	(Initial value)
1	Multiprocessor format selected	

Bits 1 and 0—Clock Select 1 and 0 (CKS1, CKS0): These bits select the clock source for the baud rate generator. The clock source can be selected from ø, ø/4, ø/16, and ø/64, according to the setting of bits CKS1 and CKS0.

For the relation between the clock source, the bit rate register setting, and the baud rate, see section 14.2.8, Bit Rate Register (BRR).

Bit 1 CKS1	Bit 0 CKS0	Description	
0	0	ø clock	(Initial value)
	1	ø/4 clock	
1	0	ø/16 clock	
	1	ø/64 clock	

14.2.6 Serial Control Register (SCR)

Bit :	7	6	5	4	3	2	1	0
	TIE	RIE	TE	RE	MPIE	TEIE	CKE1	CKE0
Initial value :	0	0	0	0	0	0	0	0
R/W :	R/W	R/W	R/W	R/W	R/W	R/W	R/W	R/W

SCR is a register that performs enabling or disabling of SCI transfer operations, serial clock output in asynchronous mode, and interrupt requests, and selection of the serial clock source.

SCR can be read or written to by the CPU at all times.

SCR is initialized to H'00 by a reset, and by putting the device in standby mode or module stop mode. In the H8S/2398, H8S/2394, H8S/2392, and H8S/2390, however, the value in SCR is initialized to H'00 by a reset, or in hardware standby mode, but SCR retains its current state when the device enters software standby mode or module stop mode.

Bit 7—Transmit Interrupt Enable (TIE): Enables or disables transmit data empty interrupt (TXI) request generation when serial transmit data is transferred from TDR to TSR and the TDRE flag in SSR is set to 1.

Bit 7 TIE	Description	
0	Transmit data empty interrupt (TXI) requests disabled*	(Initial value)
1	Transmit data empty interrupt (TXI) requests enabled	

Note:* TXI interrupt request cancellation can be performed by reading 1 from the TDRE flag, then clearing it to 0, or clearing the TIE bit to 0.

Bit 6—Receive Interrupt Enable (RIE): Enables or disables receive data full interrupt (RXI) request and receive error interrupt (ERI) request generation when serial receive data is transferred from RSR to RDR and the RDRF flag in SSR is set to 1.

Bit 6 RIE	Description	
0	Receive data full interrupt (RXI) request and receive error interrupt (ERI) request disabled*	(Initial value)
1	Receive data full interrupt (RXI) request and receive error interrupt (ERI) request enabled	

Note:* RXI and ERI interrupt request cancellation can be performed by reading 1 from the RDRF flag, or the FER, PER, or ORER flag, then clearing the flag to 0, or clearing the RIE bit to 0.

Bit 5—Transmit Enable (TE): Enables or disables the start of serial transmission by the SCI.

Bit 5 TE	Description	
0	Transmission disabled*[1]	(Initial value)
1	Transmission enabled*[2]	

Notes: 1. The TDRE flag in SSR is fixed at 1.
2. In this state, serial transmission is started when transmit data is written to TDR and the TDRE flag in SSR is cleared to 0.
SMR setting must be performed to decide the transfer format before setting the TE bit to 1.

Bit 4—Receive Enable (RE): Enables or disables the start of serial reception by the SCI.

Bit 4 RE	Description	
0	Reception disabled*[1]	(Initial value)
1	Reception enabled*[2]	

Notes: 1. Clearing the RE bit to 0 does not affect the RDRF, FER, PER, and ORER flags, which retain their states.
2. Serial reception is started in this state when a start bit is detected in asynchronous mode or serial clock input is detected in clocked synchronous mode.
SMR setting must be performed to decide the transfer format before setting the RE bit to 1.

Bit 3—Multiprocessor Interrupt Enable (MPIE): Enables or disables multiprocessor interrupts. The MPIE bit setting is only valid in asynchronous mode when the MP bit in SMR is set to 1.

The MPIE bit setting is invalid in clocked synchronous mode or when the MP bit is cleared to 0.

Bit 3 MPIE	Description	
0	Multiprocessor interrupts disabled (normal reception performed) [Clearing conditions] • When the MPIE bit is cleared to 0 • When MPB= 1 data is received	(Initial value)
1	Multiprocessor interrupts enabled* Receive data full interrupt (RXI) requests, receive error interrupt (ERI) requests, and setting of the RDRF, FER, and ORER flags in SSR are disabled until data with the multiprocessor bit set to 1 is received.	

Note: * When receive data including MPB = 0 is received, receive data transfer from RSR to RDR, receive error detection, and setting of the RDRF, FER, and ORER flags in SSR, is not performed. When receive data including MPB = 1 is received, the MPB bit in SSR is set to 1, the MPIE bit is cleared to 0 automatically, and generation of RXI and ERI interrupts (when the TIE and RIE bits in SCR are set to 1) and FER and ORER flag setting is enabled.

Bit 2—Transmit End Interrupt Enable (TEIE): Enables or disables transmit end interrupt (TEI) request generation when there is no valid transmit data in TDR in MSB data transmission.

Bit 2 TEIE	Description	
0	Transmit end interrupt (TEI) request disabled*	(Initial value)
1	Transmit end interrupt (TEI) request enabled*	

Note: * TEI cancellation can be performed by reading 1 from the TDRE flag in SSR, then clearing it to 0 and clearing the TEND flag to 0, or clearing the TEIE bit to 0.

Bits 1 and 0—Clock Enable 1 and 0 (CKE1, CKE0): These bits are used to select the SCI clock source and enable or disable clock output from the SCK pin. The combination of the CKE1 and CKE0 bits determines whether the SCK pin functions as an I/O port, the serial clock output pin, or the serial clock input pin.

The setting of the CKE0 bit, however, is only valid for internal clock operation (CKE1 = 0) in asynchronous mode. The CKE0 bit setting is invalid in clocked synchronous mode, and in the case of external clock operation (CKE1 = 1). Note that the SCI's operating mode must be decided using SMR before setting the CKE1 and CKE0 bits.

For details of clock source selection, see table 14-9 in section 14.3, Operation.

Bit 1 CKE1	Bit 0 CKE0	Description	
0	0	Asynchronous mode	Internal clock/SCK pin functions as I/O port*[1]
		Clocked synchronous mode	Internal clock/SCK pin functions as serial clock output
	1	Asynchronous mode	Internal clock/SCK pin functions as clock output*[2]
		Clocked synchronous mode	Internal clock/SCK pin functions as serial clock output
1	0	Asynchronous mode	External clock/SCK pin functions as clock input*[3]
		Clocked synchronous mode	External clock/SCK pin functions as serial clock input
	1	Asynchronous mode	External clock/SCK pin functions as clock input*[3]
		Clocked synchronous mode	External clock/SCK pin functions as serial clock input

Notes: 1. Initial value
2. Outputs a clock of the same frequency as the bit rate.
3. Inputs a clock with a frequency 16 times the bit rate.

14.2.7 Serial Status Register (SSR)

Bit :	7	6	5	4	3	2	1	0
	TDRE	RDRF	ORER	FER	PER	TEND	MPB	MPBT
Initial value :	1	0	0	0	0	1	0	0
R/W :	R/(W)*	R/(W)*	R/(W)*	R/(W)*	R/(W)*	R	R	R/W

Note: * Only 0 can be written, to clear the flag.

SSR is an 8-bit register containing status flags that indicate the operating status of the SCI, and multiprocessor bits.

SSR can be read or written to by the CPU at all times. However, 1 cannot be written to flags TDRE, RDRF, ORER, PER, and FER. Also note that in order to clear these flags they must be read as 1 beforehand. The TEND flag and MPB flag are read-only flags and cannot be modified.

SSR is initialized to H'84 by a reset, and by putting the device in standby mode or module stop mode.

Bit 7—Transmit Data Register Empty (TDRE): Indicates that data has been transferred from TDR to TSR and the next serial data can be written to TDR.

Bit 7 TDRE	Description
0	[Clearing conditions] • When 0 is written to TDRE after reading TDRE = 1 • When the DMAC or DTC is activated by a TXI interrupt and write data to TDR
1	[Setting conditions] (Initial value) • When the TE bit in SCR is 0 • When data is transferred from TDR to TSR and data can be written to TDR

Bit 6—Receive Data Register Full (RDRF): Indicates that the received data is stored in RDR.

Bit 6 RDRF	Description
0	[Clearing conditions] (Initial value) • When 0 is written to RDRF after reading RDRF = 1 • When the DMAC or DTC is activated by an RXI interrupt and read data from RDR
1	[Setting condition] When serial reception ends normally and receive data is transferred from RSR to RDR

Note: RDR and the RDRF flag are not affected and retain their previous values when an error is detected during reception or when the RE bit in SCR is cleared to 0.

If reception of the next data is completed while the RDRF flag is still set to 1, an overrun error will occur and the receive data will be lost.

Bit 5—Overrun Error (ORER): Indicates that an overrun error occurred during reception, causing abnormal termination.

Bit 5 ORER	Description
0	[Clearing condition] (Initial value)*1 When 0 is written to ORER after reading ORER = 1
1	[Setting condition] When the next serial reception is completed while RDRF = 1*2

Notes: 1. The ORER flag is not affected and retains its previous state when the RE bit in SCR is cleared to 0.

2. The receive data prior to the overrun error is retained in RDR, and the data received subsequently is lost. Also, subsequent serial reception cannot be continued while the ORER flag is set to 1. In clocked synchronous mode, serial transmission cannot be continued, either.

Bit 4—Framing Error (FER): Indicates that a framing error occurred during reception in asynchronous mode, causing abnormal termination.

Bit 4 FER	Description
0	[Clearing condition] (Initial value)*1 When 0 is written to FER after reading FER = 1
1	[Setting condition] When the SCI checks whether the stop bit at the end of the receive data when reception ends, and the stop bit is 0 *2

Notes: 1. The FER flag is not affected and retains its previous state when the RE bit in SCR is cleared to 0.

2. In 2-stop-bit mode, only the first stop bit is checked for a value of 0; the second stop bit is not checked. If a framing error occurs, the receive data is transferred to RDR but the RDRF flag is not set. Also, subsequent serial reception cannot be continued while the FER flag is set to 1. In clocked synchronous mode, serial transmission cannot be continued, either.

Bit 3—Parity Error (PER): Indicates that a parity error occurred during reception using parity addition in asynchronous mode, causing abnormal termination.

Bit 3 PER	Description
0	[Clearing condition] (Initial value)*[1] When 0 is written to PER after reading PER = 1
1	[Setting condition] When, in reception, the number of 1 bits in the receive data plus the parity bit does not match the parity setting (even or odd) specified by the O/$\overline{E}$ bit in SMR*[2]

Notes: 1. The PER flag is not affected and retains its previous state when the RE bit in SCR is cleared to 0.
2. If a parity error occurs, the receive data is transferred to RDR but the RDRF flag is not set. Also, subsequent serial reception cannot be continued while the PER flag is set to 1. In clocked synchronous mode, serial transmission cannot be continued, either.

Bit 2—Transmit End (TEND): Indicates that there is no valid data in TDR when the last bit of the transmit character is sent, and transmission has been ended.

The TEND flag is read-only and cannot be modified.

Bit 2 TEND	Description
0	[Clearing conditions] • When 0 is written to TDRE after reading TDRE = 1 • When the DMAC or DTC is activated by a TXI interrupt and write data to TDR
1	[Setting conditions] (Initial value) • When the TE bit in SCR is 0 • When TDRE = 1 at transmission of the last bit of a 1-byte serial transmit character

Bit 1—Multiprocessor Bit (MPB): When reception is performed using multiprocessor format in asynchronous mode, MPB stores the multiprocessor bit in the receive data.

MPB is a read-only bit, and cannot be modified.

Bit 1 MPB	Description
0	[Clearing condition] (Initial value)* When data with a 0 multiprocessor bit is received
1	[Setting condition] When data with a 1 multiprocessor bit is received

Note: * Retains its previous state when the RE bit in SCR is cleared to 0 with multiprocessor format.

Bit 0—Multiprocessor Bit Transfer (MPBT): When transmission is performed using multiprocessor format in asynchronous mode, MPBT stores the multiprocessor bit to be added to the transmit data.

The MPBT bit setting is invalid when multiprocessor format is not used, when not transmitting, and in clocked synchronous mode.

Bit 0 MPBT	Description	
0	Data with a 0 multiprocessor bit is transmitted	(Initial value)
1	Data with a 1 multiprocessor bit is transmitted	

14.2.8 Bit Rate Register (BRR)

Bit :	7	6	5	4	3	2	1	0
Initial value :	1	1	1	1	1	1	1	1
R/W :	R/W	R/W	R/W	R/W	R/W	R/W	R/W	R/W

BRR is an 8-bit register that sets the serial transfer bit rate in accordance with the baud rate generator operating clock selected by bits CKS1 and CKS0 in SMR.

BRR can be read or written to by the CPU at all times.

BRR is initialized to H'FF by a reset, and by putting the device in standby mode or module stop mode. In the H8S/2398, H8S/2394, H8S/2392, and H8S/2390, however, the value in BRR is initialized to H'FF by a reset, or in hardware standby mode, but BRR retains its current state when the device enters software standby mode or module stop mode.

As baud rate generator control is performed independently for each channel, different values can be set for each channel.

Table 14-3 shows sample BRR settings in asynchronous mode, and table 14-4 shows sample BRR settings in clocked synchronous mode.

Table 14-3 BRR Settings for Various Bit Rates (Asynchronous Mode)

	ø = 2 MHz			ø = 2.097152 MHz			ø = 2.4576 MHz			ø = 3 MHz		
Bit Rate (bit/s)	n	N	Error (%)	n	N	Error (%)	n	N	Error (%)	n	N	Error (%)
110	1	141	0.03	1	148	–0.04	1	174	–0.26	1	212	0.03
150	1	103	0.16	1	108	0.21	1	127	0.00	1	155	0.16
300	0	207	0.16	0	217	0.21	0	255	0.00	1	77	0.16
600	0	103	0.16	0	108	0.21	0	127	0.00	0	155	0.16
1200	0	51	0.16	0	54	–0.70	0	63	0.00	0	77	0.16
2400	0	25	0.16	0	26	1.14	0	31	0.00	0	38	0.16
4800	0	12	0.16	0	13	–2.48	0	15	0.00	0	19	–2.34
9600	0	6	—	0	6	–2.48	0	7	0.00	0	9	–2.34
19200	0	2	—	0	2	—	0	3	0.00	0	4	–2.34
31250	0	1	0.00	0	1	—	0	1	—	0	2	0.00
38400	0	1	—	0	1	—	0	1	0.00	—	—	—

Bit Rate (bit/s)	ø = 3.6864 MHz n	N	Error (%)	ø = 4 MHz n	N	Error (%)	ø = 4.9152 MHz n	N	Error (%)	ø = 5 MHz n	N	Error (%)
110	2	64	0.70	2	70	0.03	2	86	0.31	2	88	–0.25
150	1	191	0.00	1	207	0.16	1	255	0.00	2	64	0.16
300	1	95	0.00	1	103	0.16	1	127	0.00	1	129	0.16
600	0	191	0.00	0	207	0.16	0	255	0.00	1	64	0.16
1200	0	95	0.00	0	103	0.16	0	127	0.00	0	129	0.16
2400	0	47	0.00	0	51	0.16	0	63	0.00	0	64	0.16
4800	0	23	0.00	0	25	0.16	0	31	0.00	0	32	–1.36
9600	0	11	0.00	0	12	0.16	0	15	0.00	0	15	1.73
19200	0	5	0.00	0	6	—	0	7	0.00	0	7	1.73
31250	—	—	—	0	3	0.00	0	4	–1.70	0	4	0.00
38400	0	2	0.00	0	2	—	0	3	0.00	0	3	1.73

Bit Rate (bit/s)	ø = 6 MHz n	N	Error (%)	ø = 6.144 MHz n	N	Error (%)	ø = 7.3728 MHz n	N	Error (%)	ø = 8 MHz n	N	Error (%)
110	2	106	–0.44	2	108	0.08	2	130	–0.07	2	141	0.03
150	2	77	0.16	2	79	0.00	2	95	0.00	2	103	0.16
300	1	155	0.16	1	159	0.00	1	191	0.00	1	207	0.16
600	1	77	0.16	1	79	0.00	1	95	0.00	1	103	0.16
1200	0	155	0.16	0	159	0.00	0	191	0.00	0	207	0.16
2400	0	77	0.16	0	79	0.00	0	95	0.00	0	103	0.16
4800	0	38	0.16	0	39	0.00	0	47	0.00	0	51	0.16
9600	0	19	–2.34	0	19	0.00	0	23	0.00	0	25	0.16
19200	0	9	–2.34	0	9	0.00	0	11	0.00	0	12	0.16
31250	0	5	0.00	0	5	2.40	0	6	—	0	7	0.00
38400	0	4	–2.34	0	4	0.00	0	5	0.00	0	6	—

Bit Rate (bit/s)	ø = 9.8304 MHz n	N	Error (%)	ø = 10 MHz n	N	Error (%)	ø = 12 MHz n	N	Error (%)	ø = 12.288 MHz n	N	Error (%)
110	2	174	–0.26	2	177	–0.25	2	212	0.03	2	217	0.08
150	2	127	0.00	2	129	0.16	2	155	0.16	2	159	0.00
300	1	255	0.00	2	64	0.16	2	77	0.16	2	79	0.00
600	1	127	0.00	1	129	0.16	1	155	0.16	1	159	0.00
1200	0	255	0.00	1	64	0.16	1	77	0.16	1	79	0.00
2400	0	127	0.00	0	129	0.16	0	155	0.16	0	159	0.00
4800	0	63	0.00	0	64	0.16	0	77	0.16	0	79	0.00
9600	0	31	0.00	0	32	–1.36	0	38	0.16	0	39	0.00
19200	0	15	0.00	0	15	1.73	0	19	–2.34	0	19	0.00
31250	0	9	–1.70	0	9	0.00	0	11	0.00	0	11	2.40
38400	0	7	0.00	0	7	1.73	0	9	–2.34	0	9	0.00

Bit Rate (bit/s)	ø = 14 MHz n	N	Error (%)	ø = 14.7456 MHz n	N	Error (%)	ø = 16 MHz n	N	Error (%)	ø = 17.2032 MHz n	N	Error (%)
110	2	248	–0.17	3	64	0.70	3	70	0.03	3	75	0.48
150	2	181	0.16	2	191	0.00	2	207	0.16	2	223	0.00
300	2	90	0.16	2	95	0.00	2	103	0.16	2	111	0.00
600	1	181	0.16	1	191	0.00	1	207	0.16	1	223	0.00
1200	1	90	0.16	1	95	0.00	1	103	0.16	1	111	0.00
2400	0	181	0.16	0	191	0.00	0	207	0.16	0	223	0.00
4800	0	90	0.16	0	95	0.00	0	103	0.16	0	111	0.00
9600	0	45	–0.93	0	47	0.00	0	51	0.16	0	55	0.00
19200	0	22	–0.93	0	23	0.00	0	25	0.16	0	27	0.00
31250	0	13	0.00	0	14	–1.70	0	15	0.00	0	16	1.20
38400	0	10	—	0	11	0.00	0	12	0.16	0	13	0.00

Bit Rate (bit/s)	ø = 18 MHz n	N	Error (%)	ø = 19.6608 MHz n	N	Error (%)	ø = 20 MHz n	N	Error (%)
110	3	79	–0.12	3	86	0.31	3	88	–0.25
150	2	233	0.16	2	255	0.00	3	64	0.16
300	2	116	0.16	2	127	0.00	2	129	0.16
600	1	233	0.16	1	255	0.00	2	64	0.16
1200	1	116	0.16	1	127	0.00	1	129	0.16
2400	0	233	0.16	0	255	0.00	1	64	0.16
4800	0	116	0.16	0	127	0.00	0	129	0.16
9600	0	58	–0.69	0	63	0.00	0	64	0.16
19200	0	28	1.02	0	31	0.00	0	32	–1.36
31250	0	17	0.00	0	19	–1.70	0	19	0.00
38400	0	14	–2.34	0	15	0.00	0	15	1.73

Table 14-4 BRR Settings for Various Bit Rates (Clocked Synchronous Mode)

Bit Rate (bit/s)	ø = 2 MHz n	N	ø = 4 MHz n	N	ø = 8 MHz n	N	ø = 10 MHz n	N	ø = 16 MHz n	N	ø = 20 MHz n	N
110	3	70										
250	2	124	2	249	3	124	—	—	3	249		
500	1	249	2	124	2	249	—	—	3	124	—	—
1 k	1	124	1	249	2	124	—	—	2	249	—	—
2.5 k	0	199	1	99	1	199	1	249	2	99	2	124
5 k	0	99	0	199	1	99	1	124	1	199	1	249
10 k	0	49	0	99	0	199	0	249	1	99	1	124
25 k	0	19	0	39	0	79	0	99	0	159	0	199
50 k	0	9	0	19	0	39	0	49	0	79	0	99
100 k	0	4	0	9	0	19	0	24	0	39	0	49
250 k	0	1	0	3	0	7	0	9	0	15	0	19
500 k	0	0*	0	1	0	3	0	4	0	7	0	9
1 M			0	0*	0	1			0	3	0	4
2.5 M							0	0*			0	1
5 M											0	0*

Legend:

Blank: Cannot be set.

— : Can be set, but there will be a degree of error.

* : Continuous transfer is not possible.

The BRR setting is found from the following formulas.

Asynchronous mode:

$$N = \frac{ø}{64 \times 2^{2n-1} \times B} \times 10^6 - 1$$

Clocked synchronous mode:

$$N = \frac{ø}{8 \times 2^{2n-1} \times B} \times 10^6 - 1$$

Where B: Bit rate (bit/s)
N: BRR setting for baud rate generator ($0 \leq N \leq 255$)
ø: Operating frequency (MHz)
n: Baud rate generator input clock (n = 0 to 3)
(See the table below for the relation between n and the clock.)

		SMR Setting	
n	**Clock**	**CKS1**	**CKS0**
0	ø	0	0
1	ø/4	0	1
2	ø/16	1	0
3	ø/64	1	1

The bit rate error in asynchronous mode is found from the following formula:

$$\text{Error (\%)} = \{ \frac{ø \times 10^6}{(N + 1) \times B \times 64 \times 2^{2n-1}} - 1 \} \times 100$$

Table 14-5 shows the maximum bit rate for each frequency in asynchronous mode. Tables 14-6 and 14-7 show the maximum bit rates with external clock input.

Table 14-5 Maximum Bit Rate for Each Frequency (Asynchronous Mode)

ø (MHz)	Maximum Bit Rate (bit/s)	n	N
2	62500	0	0
2.097152	65536	0	0
2.4576	76800	0	0
3	93750	0	0
3.6864	115200	0	0
4	125000	0	0
4.9152	153600	0	0
5	156250	0	0
6	187500	0	0
6.144	192000	0	0
7.3728	230400	0	0
8	250000	0	0
9.8304	307200	0	0
10	312500	0	0
12	375000	0	0
12.288	384000	0	0
14	437500	0	0
14.7456	460800	0	0
16	500000	0	0
17.2032	537600	0	0
18	562500	0	0
19.6608	614400	0	0
20	625000	0	0

Table 14-6 Maximum Bit Rate with External Clock Input (Asynchronous Mode)

ø (MHz)	External Input Clock (MHz)	Maximum Bit Rate (bit/s)
2	0.5000	31250
2.097152	0.5243	32768
2.4576	0.6144	38400
3	0.7500	46875
3.6864	0.9216	57600
4	1.0000	62500
4.9152	1.2288	76800
5	1.2500	78125
6	1.5000	93750
6.144	1.5360	96000
7.3728	1.8432	115200
8	2.0000	125000
9.8304	2.4576	153600
10	2.5000	156250
12	3.0000	187500
12.288	3.0720	192000
14	3.5000	218750
14.7456	3.6864	230400
16	4.0000	250000
17.2032	4.3008	268800
18	4.5000	281250
19.6608	4.9152	307200
20	5.0000	312500

Table 14-7 Maximum Bit Rate with External Clock Input (Clocked Synchronous Mode)

ø (MHz)	External Input Clock (MHz)	Maximum Bit Rate (bit/s)
2	0.3333	333333.3
4	0.6667	666666.7
6	1.0000	1000000.0
8	1.3333	1333333.3
10	1.6667	1666666.7
12	2.0000	2000000.0
14	2.3333	2333333.3
16	2.6667	2666666.7
18	3.0000	3000000.0
20	3.3333	3333333.3

14.2.9 Smart Card Mode Register (SCMR)

Bit :	7	6	5	4	3	2	1	0
	—	—	—	—	SDIR	SINV	—	SMIF
Initial value :	1	1	1	1	0	0	1	0
R/W :	—	—	—	—	R/W	R/W	—	R/W

SCMR selects LSB-first or MSB-first by means of bit SDIR. Except in the case of asynchronous mode 7-bit data, LSB-first or MSB-first can be selected regardless of the serial communication mode. The descriptions in this chapter refer to LSB-first transfer.

For details of the other bits in SCMR, see section 15.2.1, Smart Card Mode Register (SCMR).

SCMR is initialized to H'F2 by a reset, and by putting the device in standby mode or module stop mode. In the H8S/2398, H8S/2394, H8S/2392, and H8S/2390, however, the value in SCMR is initialized to H'F2 by a reset, or in hardware standby mode, but SCMR retains its current state when the device enters software standby mode or module stop mode.

Bits 7 to 4—Reserved: These bits cannot be modified and are always read as 1.

Bit 3—Smart Card Data Transfer Direction (SDIR): Selects the serial/parallel conversion format.

This bit is valid when 8-bit data is used as the transmit/receive format.

Bit 3 SDIR	Description	
0	TDR contents are transmitted LSB-first Receive data is stored in RDR LSB-first	(Initial value)
1	TDR contents are transmitted MSB-first Receive data is stored in RDR MSB-first	

Bit 2—Smart Card Data Invert (SINV): When the Smart Card interface operates as a normal SCI, 0 should be written to this bit.

Bit 1—Reserved: This bit cannot be modified always read as 1.

Bit 0—Smart Card Interface Mode Select (SMIF): When the Smart Card interface operates as a normal SCI, 0 should be written to this bit.

14.2.10 Module Stop Control Register (MSTPCR)

	MSTPCRH								MSTPCRL							
Bit :	15	14	13	12	11	10	9	8	7	6	5	4	3	2	1	0
Initial value :	0	0	1	1	1	1	1	1	1	1	1	1	1	1	1	1
R/W :	R/W	R/W	R/W	R/W	R/W	R/W	R/W	R/W	R/W	R/W	R/W	R/W	R/W	R/W	R/W	R/W

MSTPCR is a 16-bit readable/writable register that performs module stop mode control.

When the corresponding bit of bits MSTP7 to MSTP5 is set to 1, SCI operation stops at the end of the bus cycle and a transition is made to module stop mode. Registers cannot be read or written to in module stop mode. For details, see section 21.5, Module Stop Mode.

MSTPCR is initialized to H'3FFF by a reset and in hardware standby mode. It is not initialized in software standby mode.

Bit 7—Module Stop (MSTP7): Specifies the SCI channel 2 module stop mode.

Bit 7 MSTP7	Description	
0	SCI channel 2 module stop mode cleared	
1	SCI channel 2 module stop mode set	(Initial value)

Bit 6—Module Stop (MSTP6): Specifies the SCI channel 1 module stop mode.

Bit 6 MSTP6	Description	
0	SCI channel 1 module stop mode cleared	
1	SCI channel 1 module stop mode set	(Initial value)

Bit 5—Module Stop (MSTP5): Specifies the SCI channel 0 module stop mode.

Bit 5 MSTP5	Description	
0	SCI channel 0 module stop mode cleared	
1	SCI channel 0 module stop mode set	(Initial value)

14.3 Operation

14.3.1 Overview

The SCI can carry out serial communication in two modes: asynchronous mode in which synchronization is achieved character by character, and clocked synchronous mode in which synchronization is achieved with clock pulses.

Selection of asynchronous or clocked synchronous mode and the transmission format is made using SMR as shown in table 14-8. The SCI clock is determined by a combination of the C/$\overline{A}$ bit in SMR and the CKE1 and CKE0 bits in SCR, as shown in table 14-9.

Asynchronous Mode

- Data length: Choice of 7 or 8 bits
- Choice of parity addition, multiprocessor bit addition, and addition of 1 or 2 stop bits (the combination of these parameters determines the transfer format and character length)
- Detection of framing, parity, and overrun errors, and breaks, during reception
- Choice of internal or external clock as SCI clock source
  - When internal clock is selected:
    The SCI operates on the baud rate generator clock and a clock with the same frequency as the bit rate can be output
  - When external clock is selected:
    A clock with a frequency of 16 times the bit rate must be input (the on-chip baud rate generator is not used)

Clocked Synchronous Mode

- Transfer format: Fixed 8-bit data
- Detection of overrun errors during reception
- Choice of internal or external clock as SCI clock source
  - When internal clock is selected:
    The SCI operates on the baud rate generator clock and a serial clock is output off-chip
  - When external clock is selected:
    The on-chip baud rate generator is not used, and the SCI operates on the input serial clock

Table 14-8 SMR Settings and Serial Transfer Format Selection

SMR Settings						SCI Transfer Format			
Bit 7	Bit 6	Bit 2	Bit 5	Bit 3					
C/$\overline{A}$	CHR	MP	PE	STOP	Mode	Data Length	Multi Processor Bit	Parity Bit	Stop Bit Length
0	0	0	0	0	Asynchronous mode	8-bit data	No	No	1 bit
				1					2 bits
			1	0				Yes	1 bit
				1					2 bits
	1		0	0		7-bit data		No	1 bit
				1					2 bits
			1	0				Yes	1 bit
				1					2 bits
	0	1	—	0	Asynchronous mode (multi-processor format)	8-bit data	Yes	No	1 bit
			—	1					2 bits
	1		—	0		7-bit data			1 bit
			—	1					2 bits
1	—	—	—	—	Clocked synchronous mode	8-bit data	No		None

Table 14-9 SMR and SCR Settings and SCI Clock Source Selection

SMR	SCR Setting				SCI Transmit/Receive Clock	
		Bit 7	Bit 1	Bit 0		Clock
C/$\overline{A}$	CKE1	CKE0	Mode		Source	SCK Pin Function
0	0	0	Asynchronous mode		Internal	SCI does not use SCK pin
		1				Outputs clock with same frequency as bit rate
	1	0			External	Inputs clock with frequency of 16 times the bit rate
		1				
1	0	0	Clocked synchronous mode		Internal	Outputs serial clock
		1				
	1	0			External	Inputs serial clock
		1				

14.3.2 Operation in Asynchronous Mode

In asynchronous mode, characters are sent or received, each preceded by a start bit indicating the start of communication and one or two stop bits indicating the end of communication. Serial communication is thus carried out with synchronization established on a character-by-character basis.

Inside the SCI, the transmitter and receiver are independent units, enabling full-duplex communication. Both the transmitter and the receiver also have a double-buffered structure, so that data can be read or written during transmission or reception, enabling continuous data transfer.

Figure 14-2 shows the general format for asynchronous serial communication.

In asynchronous serial communication, the transmission line is usually held in the mark state (high level). The SCI monitors the transmission line, and when it goes to the space state (low level), recognizes a start bit and starts serial communication.

One serial communication character consists of a start bit (low level), followed by data (in LSB-first order), a parity bit (high or low level), and finally one or two stop bits (high level).

In asynchronous mode, the SCI performs synchronization at the falling edge of the start bit in reception. The SCI samples the data on the 8th pulse of a clock with a frequency of 16 times the length of one bit, so that the transfer data is latched at the center of each bit.

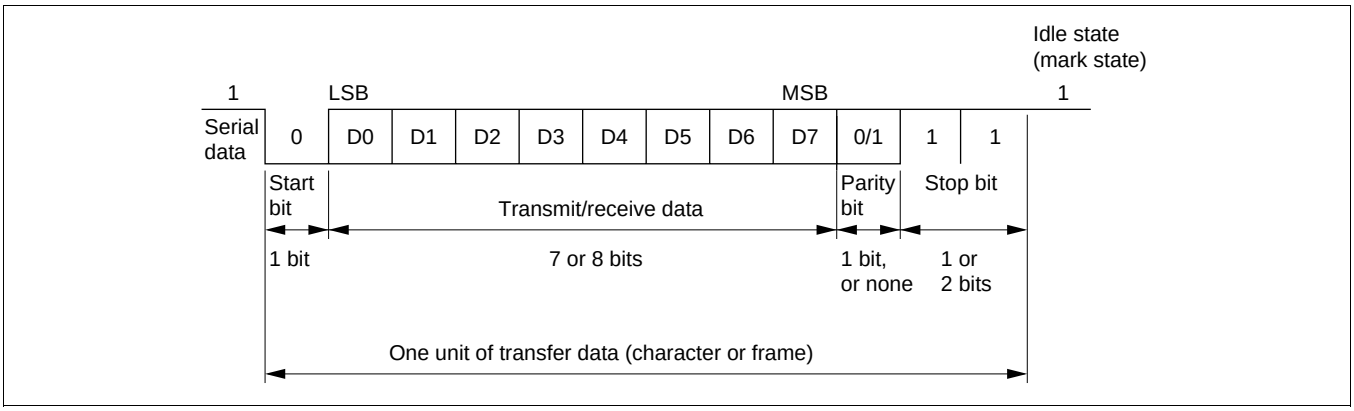

Figure 14-2 Data Format in Asynchronous Communication (Example with 8-Bit Data, Parity, Two Stop Bits)

Data Transfer Format: Table 14-10 shows the data transfer formats that can be used in asynchronous mode. Any of 12 transfer formats can be selected according to the SMR setting.

Table 14-10 Serial Transfer Formats (Asynchronous Mode)

SMR Settings				Serial Transfer Format and Frame Length
CHR	PE	MP	STOP	1 2 3 4 5 6 7 8 9 10 11 12
0	0	0	0	S 8-bit data STOP
0	0	0	1	S 8-bit data STOP STOP
0	1	0	0	S 8-bit data P STOP
0	1	0	1	S 8-bit data P STOP STOP
1	0	0	0	S 7-bit data STOP
1	0	0	1	S 7-bit data STOP STOP
1	1	0	0	S 7-bit data P STOP
1	1	0	1	S 7-bit data P STOP STOP
0	—	1	0	S 8-bit data MPB STOP
0	—	1	1	S 8-bit data MPB STOP STOP
1	—	1	0	S 7-bit data MPB STOP
1	—	1	1	S 7-bit data MPB STOP STOP

Legend:

S: Start bit

STOP: Stop bit

P: Parity bit

MPB: Multiprocessor bit

Clock: Either an internal clock generated by the on-chip baud rate generator or an external clock input at the SCK pin can be selected as the SCI's serial clock, according to the setting of the C/$\overline{A}$ bit in SMR and the CKE1 and CKE0 bits in SCR. For details of SCI clock source selection, see table 14-9.

When an external clock is input at the SCK pin, the clock frequency should be 16 times the bit rate used.

When the SCI is operated on an internal clock, the clock can be output from the SCK pin. The frequency of the clock output in this case is equal to the bit rate, and the phase is such that the rising edge of the clock is in the middle of the transmit data, as shown in figure 14-3.

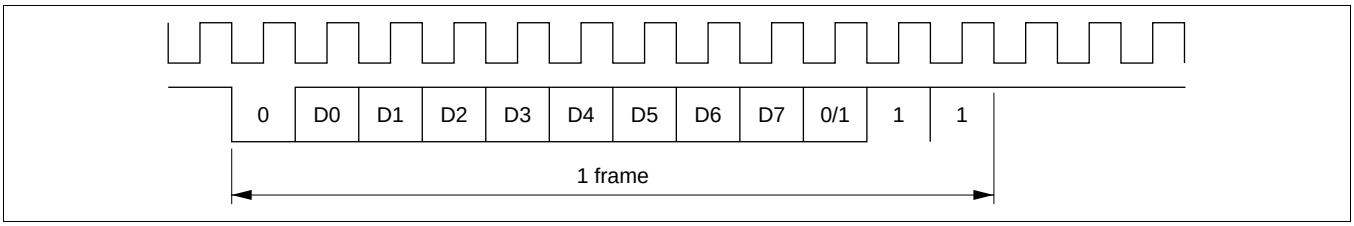

Figure 14-3 Relation between Output Clock and Transfer Data Phase (Asynchronous Mode)

Data Transfer Operations:

- SCI initialization (asynchronous mode)

  Before transmitting and receiving data, you should first clear the TE and RE bits in SCR to 0, then initialize the SCI as described below.

  When the operating mode, transfer format, etc., is changed, the TE and RE bits must be cleared to 0 before making the change using the following procedure. When the TE bit is cleared to 0, the TDRE flag is set to 1 and TSR is initialized. Note that clearing the RE bit to 0 does not change the contents of the RDRF, PER, FER, and ORER flags, or the contents of RDR.

  When an external clock is used the clock should not be stopped during operation, including initialization, since operation is uncertain.

Figure 14-4 shows a sample SCI initialization flowchart.

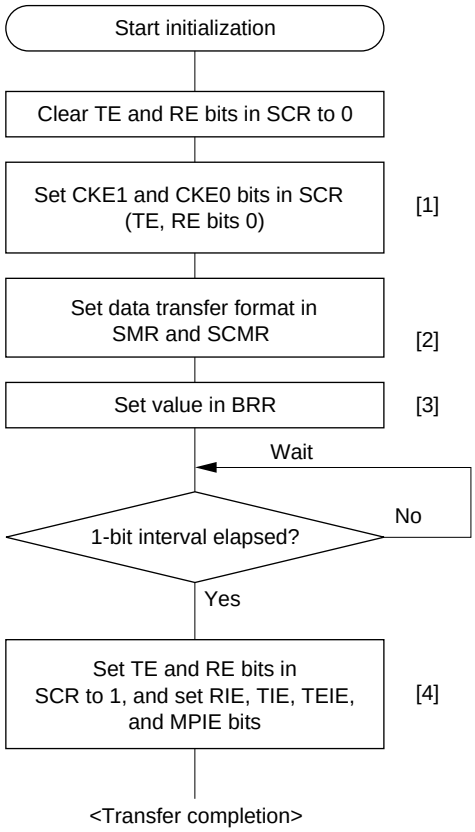

[1] Set the clock selection in SCR. Be sure to clear bits RIE, TIE, TEIE, and MPIE, and bits TE and RE, to 0.

When the clock is selected in asynchronous mode, it is output immediately after SCR settings are made.

[2] Set the data transfer format in SMR and SCMR.

[3] Write a value corresponding to the bit rate to BRR. Not necessary if an external clock is used.

[4] Wait at least one bit interval, then set the TE bit or RE bit in SCR to 1. Also set the RIE, TIE, TEIE, and MPIE bits.

Setting the TE and RE bits enables the TxD and RxD pins to be used.

Figure 14-4 Sample SCI Initialization Flowchart

- Serial data transmission (asynchronous mode)

  Figure 14-5 shows a sample flowchart for serial transmission.

  The following procedure should be used for serial data transmission.

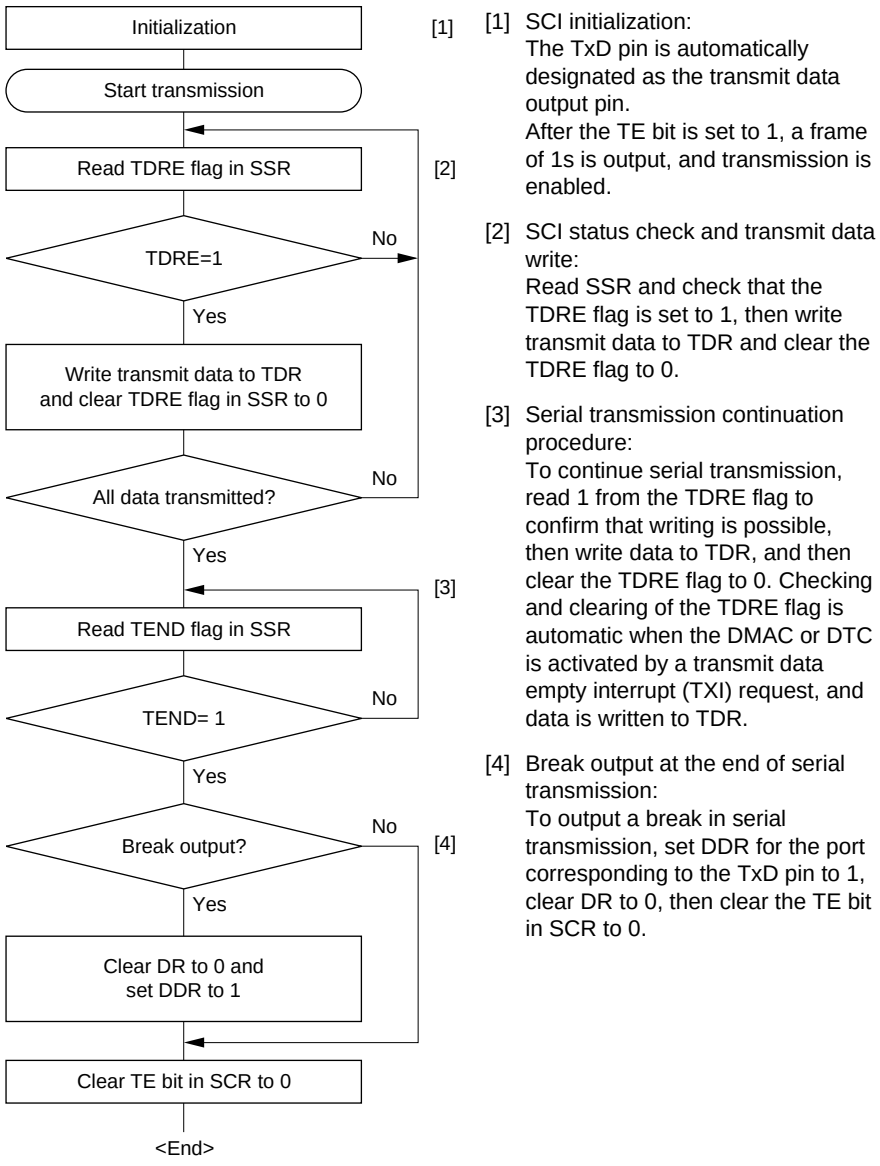

Figure 14-5 Sample Serial Transmission Flowchart

In serial transmission, the SCI operates as described below.

[1] The SCI monitors the TDRE flag in SSR, and if is 0, recognizes that data has been written to TDR, and transfers the data from TDR to TSR.

[2] After transferring data from TDR to TSR, the SCI sets the TDRE flag to 1 and starts transmission.
If the TIE bit is set to 1 at this time, a transmit data empty interrupt (TXI) is generated.
The serial transmit data is sent from the TxD pin in the following order.
[a] Start bit:
One 0-bit is output.

[b] Transmit data:

8-bit or 7-bit data is output in LSB-first order.

[c] Parity bit or multiprocessor bit:

One parity bit (even or odd parity), or one multiprocessor bit is output.

A format in which neither a parity bit nor a multiprocessor bit is output can also be selected.

[d] Stop bit(s):

One or two 1-bits (stop bits) are output.

[e] Mark state:

1 is output continuously until the start bit that starts the next transmission is sent.

[3] The SCI checks the TDRE flag at the timing for sending the stop bit.

If the TDRE flag is cleared to 0, the data is transferred from TDR to TSR, the stop bit is sent, and then serial transmission of the next frame is started.

If the TDRE flag is set to 1, the TEND flag in SSR is set to 1, the stop bit is sent, and then the “mark state” is entered in which 1 is output continuously. If the TEIE bit in SCR is set to 1 at this time, a TEI interrupt request is generated.

Figure 14-6 shows an example of the operation for transmission in asynchronous mode.

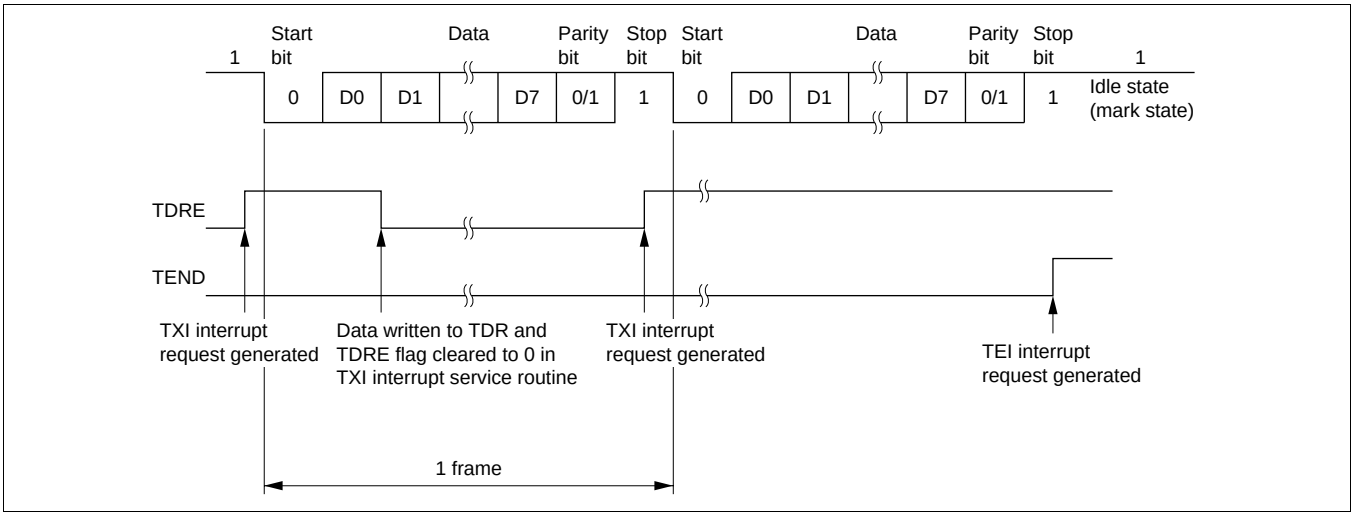

Figure 14-6 Example of Operation in Transmission in Asynchronous Mode (Example with 8-Bit Data, Parity, One Stop Bit)

- Serial data reception (asynchronous mode)

  Figure 14-7 shows a sample flowchart for serial reception.

  The following procedure should be used for serial data reception.

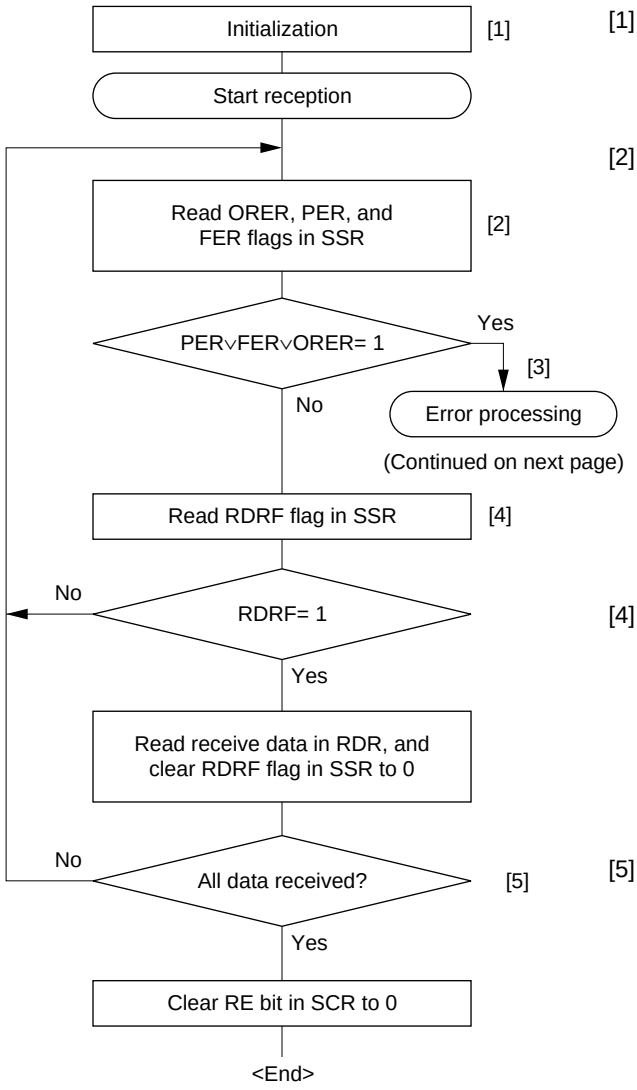

[1] SCI initialization:
The RxD pin is automatically designated as the receive data input pin.

[2] [3] Receive error processing and break detection:
If a receive error occurs, read the ORER, PER, and FER flags in SSR to identify the error. After performing the appropriate error processing, ensure that the ORER, PER, and FER flags are all cleared to 0. Reception cannot be resumed if any of these flags are set to 1. In the case of a framing error, a break can be detected by reading the value of the input port corresponding to the RxD pin.

[4] SCI status check and receive data read :
Read SSR and check that RDRF = 1, then read the receive data in RDR and clear the RDRF flag to 0. Transition of the RDRF flag from 0 to 1 can also be identified by an RXI interrupt.

[5] Serial reception continuation procedure:
To continue serial reception, before the stop bit for the current frame is received, read the RDRF flag, read RDR, and clear the RDRF flag to 0. The RDRF flag is cleared automatically when the DMAC or DTC is activated by an RXI interrupt and the RDR value is read.

Figure 14-7 Sample Serial Reception Data Flowchart

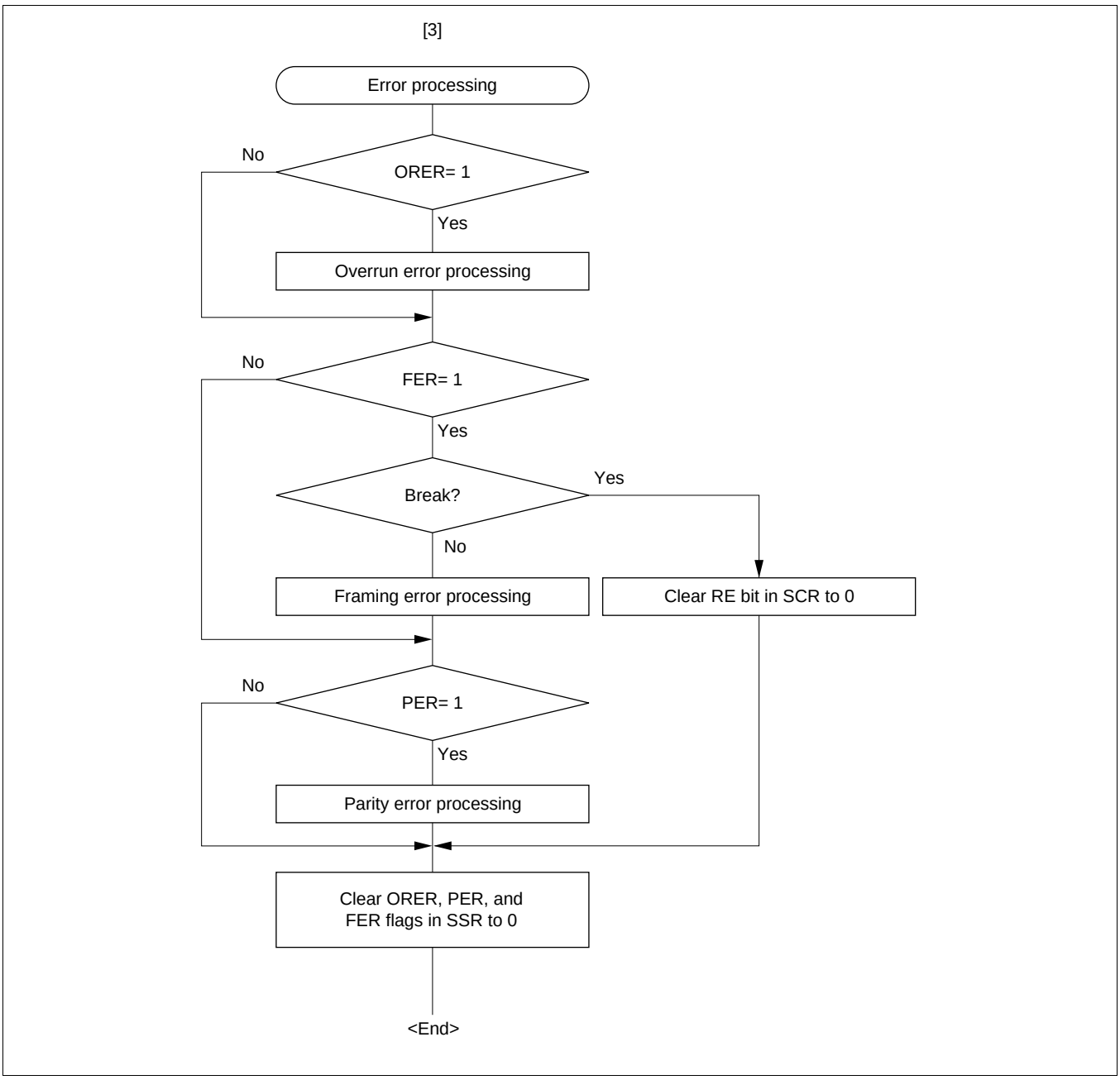

Figure 14-7 Sample Serial Reception Data Flowchart (cont)

In serial reception, the SCI operates as described below.

[1] The SCI monitors the transmission line, and if a 0 stop bit is detected, performs internal synchronization and starts reception.

[2] The received data is stored in RSR in LSB-to-MSB order.

[3] The parity bit and stop bit are received.
After receiving these bits, the SCI carries out the following checks.

[a] Parity check:
The SCI checks whether the number of 1 bits in the receive data agrees with the parity (even or odd) set in the O/$\overline{E}$ bit in SMR.

[b] Stop bit check:
The SCI checks whether the stop bit is 1.
If there are two stop bits, only the first is checked.

[c] Status check:
The SCI checks whether the RDRF flag is 0, indicating that the receive data can be transferred from RSR to RDR.

If all the above checks are passed, the RDRF flag is set to 1, and the receive data is stored in RDR.

If a receive error* is detected in the error check, the operation is as shown in table 14-11.

Note: * Subsequent receive operations cannot be performed when a receive error has occurred.
Also note that the RDRF flag is not set to 1 in reception, and so the error flags must be cleared to 0.

[4] If the RIE bit in SCR is set to 1 when the RDRF flag changes to 1, a receive data full interrupt (RXI) request is generated.
Also, if the RIE bit in SCR is set to 1 when the ORER, PER, or FER flag changes to 1, a receive error interrupt (ERI) request is generated.

Table 14-11 Receive Errors and Conditions for Occurrence

Receive Error	Abbreviation	Occurrence Condition	Data Transfer
Overrun error	ORER	When the next data reception is completed while the RDRF flag in SSR is set to 1	Receive data is not transferred from RSR to RDR.
Framing error	FER	When the stop bit is 0	Receive data is transferred from RSR to RDR.
Parity error	PER	When the received data differs from the parity (even or odd) set in SMR	Receive data is transferred from RSR to RDR.

Figure 14-8 shows an example of the operation for reception in asynchronous mode.

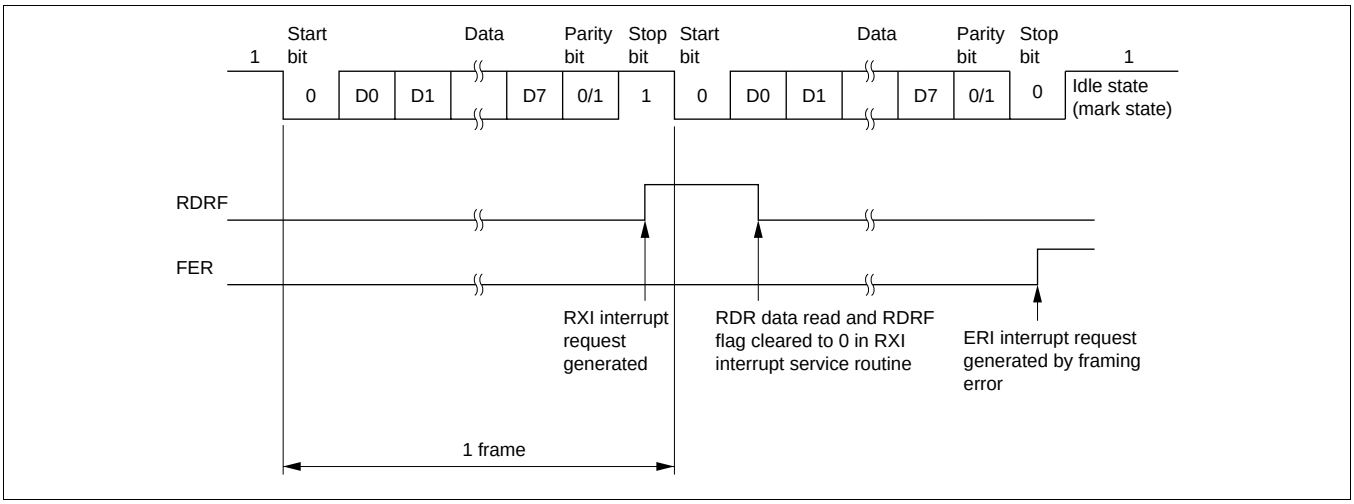

Figure 14-8 Example of SCI Operation in Reception (Example with 8-Bit Data, Parity, One Stop Bit)

14.3.3 Multiprocessor Communication Function

The multiprocessor communication function performs serial communication using the multiprocessor format, in which a multiprocessor bit is added to the transfer data, in asynchronous mode. Use of this function enables data transfer to be performed among a number of processors sharing transmission lines.

When multiprocessor communication is carried out, each receiving station is addressed by a unique ID code.

The serial communication cycle consists of two component cycles: an ID transmission cycle which specifies the receiving station , and a data transmission cycle. The multiprocessor bit is used to differentiate between the ID transmission cycle and the data transmission cycle.

The transmitting station first sends the ID of the receiving station with which it wants to perform serial communication as data with a 1 multiprocessor bit added. It then sends transmit data as data with a 0 multiprocessor bit added.

The receiving station skips the data until data with a 1 multiprocessor bit is sent.

When data with a 1 multiprocessor bit is received, the receiving station compares that data with its own ID. The station whose ID matches then receives the data sent next. Stations whose ID does not match continue to skip the data until data with a 1 multiprocessor bit is again received. In this way, data communication is carried out among a number of processors.

Figure 14-9 shows an example of inter-processor communication using the multiprocessor format.

Data Transfer Format: There are four data transfer formats.

When the multiprocessor format is specified, the parity bit specification is invalid.

For details, see table 14-10.

Clock: See the section on asynchronous mode.

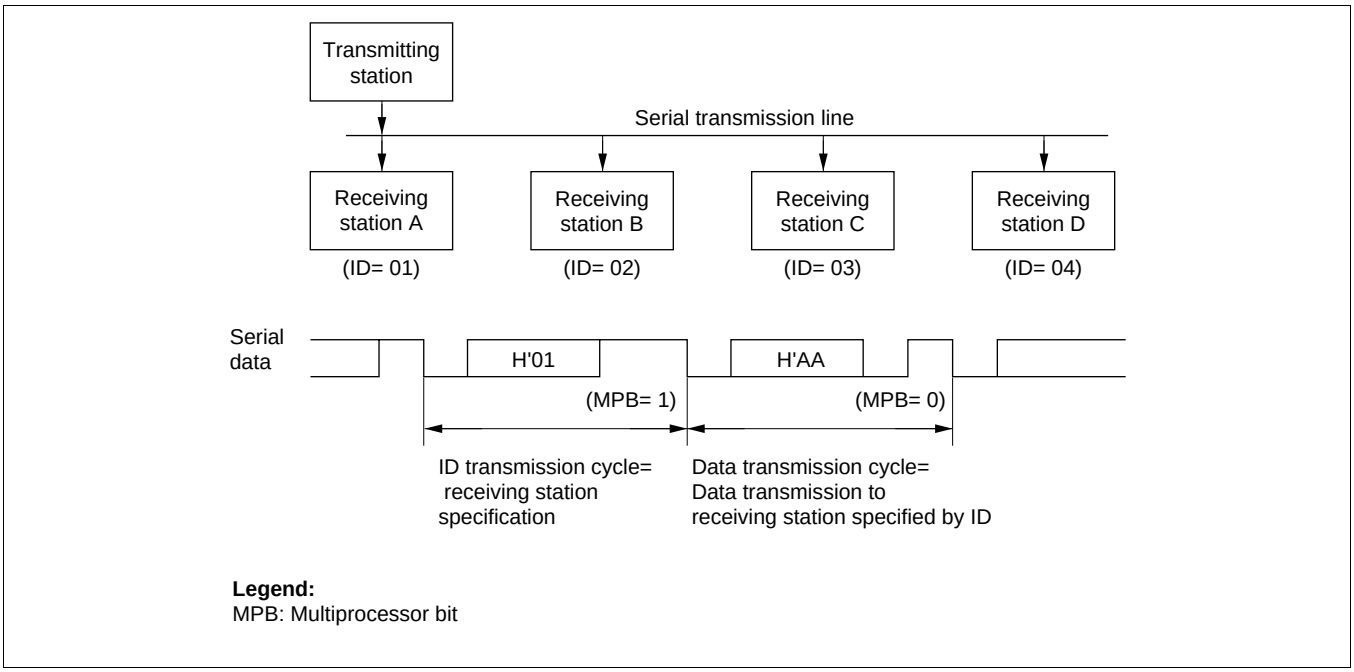

Figure 14-9 Example of Inter-Processor Communication Using Multiprocessor Format (Transmission of Data H'AA to Receiving Station A)

Data Transfer Operations:

- Multiprocessor serial data transmission
  Figure 14-10 shows a sample flowchart for multiprocessor serial data transmission.

  The following procedure should be used for multiprocessor serial data transmission.

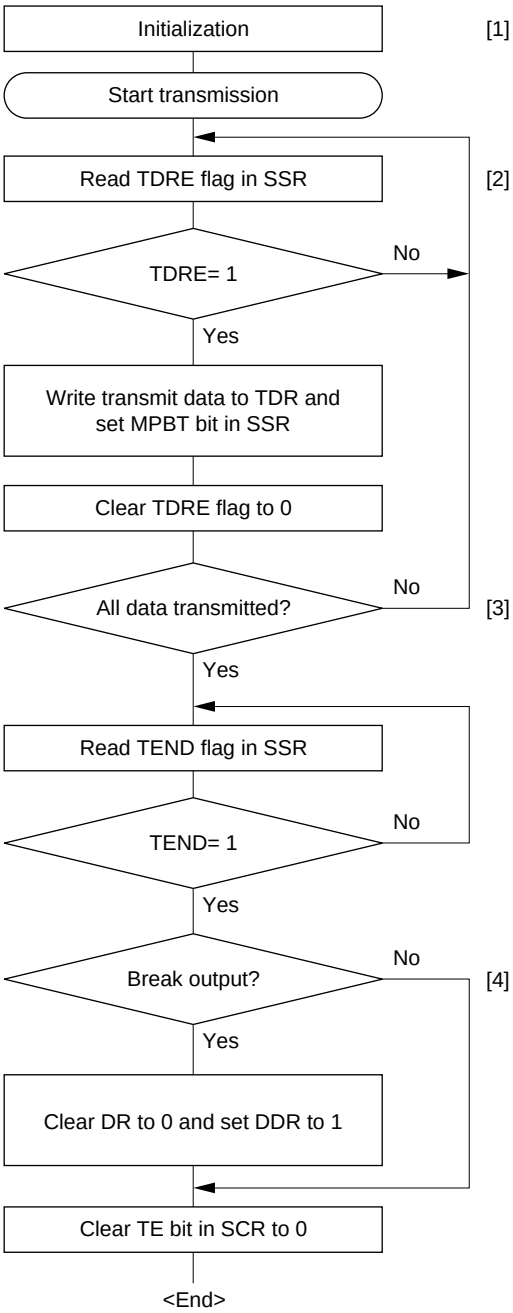

[1] SCI initialization:
The TxD pin is automatically designated as the transmit data output pin.
After the TE bit is set to 1, a frame of 1s is output, and transmission is enabled.

[2] SCI status check and transmit data write:
Read SSR and check that the TDRE flag is set to 1, then write transmit data to TDR. Set the MPBT bit in SSR to 0 or 1.
Finally, clear the TDRE flag to 0.

[3] Serial transmission continuation procedure:
To continue serial transmission, be sure to read 1 from the TDRE flag to confirm that writing is possible, then write data to TDR, and then clear the TDRE flag to 0. Checking and clearing of the TDRE flag is automatic when the DMAC or DTC is activated by a transmit data empty interrupt (TXI) request, and data is written to TDR.

[4] Break output at the end of serial transmission:
To output a break in serial transmission, set the port DDR to 1, clear DR to 0, then clear the TE bit in SCR to 0.

Figure 14-10 Sample Multiprocessor Serial Transmission Flowchart

In serial transmission, the SCI operates as described below.

[1] The SCI monitors the TDRE flag in SSR, and if is 0, recognizes that data has been written to TDR, and transfers the data from TDR to TSR.

[2] After transferring data from TDR to TSR, the SCI sets the TDRE flag to 1 and starts transmission.
If the TIE bit is set to 1 at this time, a transmit data empty interrupt (TXI) is generated.
The serial transmit data is sent from the TxD pin in the following order.

[a] Start bit:
One 0-bit is output.

[b] Transmit data:
8-bit or 7-bit data is output in LSB-first order.

[c] Multiprocessor bit
One multiprocessor bit (MPBT value) is output.

[d] Stop bit(s):
One or two 1-bits (stop bits) are output.

[e] Mark state:
1 is output continuously until the start bit that starts the next transmission is sent.

[3] The SCI checks the TDRE flag at the timing for sending the stop bit.
If the TDRE flag is cleared to 0, data is transferred from TDR to TSR, the stop bit is sent, and then serial transmission of the next frame is started.
If the TDRE flag is set to 1, the TEND flag in SSR is set to 1, the stop bit is sent, and then the mark state is entered in which 1 is output continuously. If the TEIE bit in SCR is set to 1 at this time, a transmission end interrupt (TEI) request is generated.

Figure 14-11 shows an example of SCI operation for transmission using the multiprocessor format.

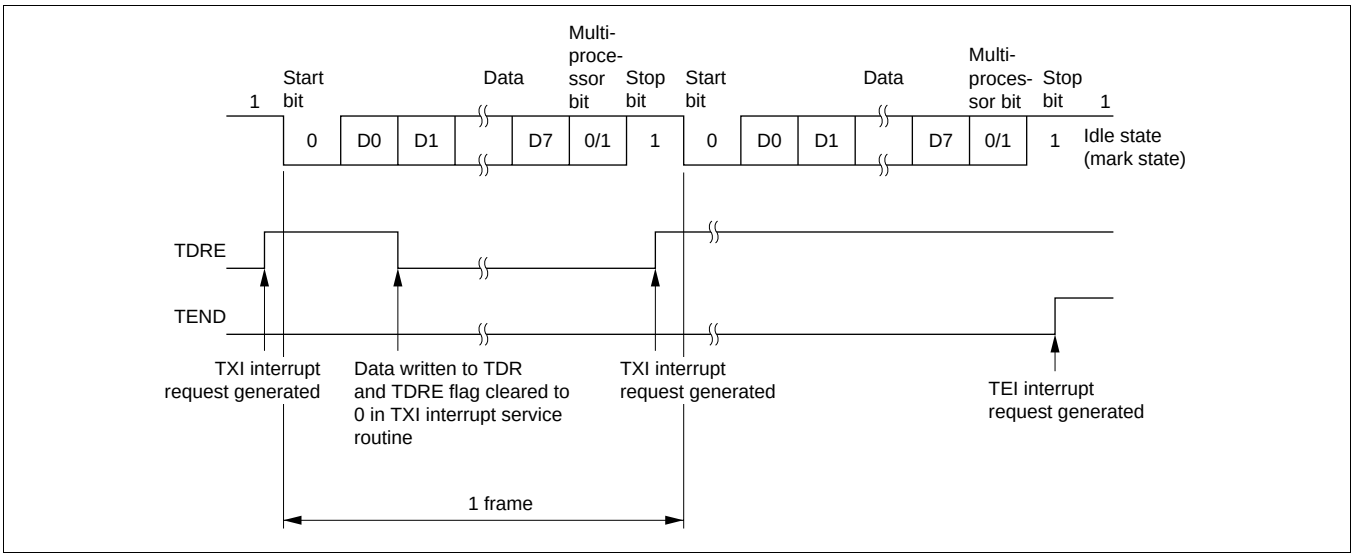

Figure 14-11 Example of SCI Operation in Transmission (Example with 8-Bit Data, Multiprocessor Bit, One Stop Bit)

- Multiprocessor serial data reception

  Figure 14-12 shows a sample flowchart for multiprocessor serial reception.

  The following procedure should be used for multiprocessor serial data reception.

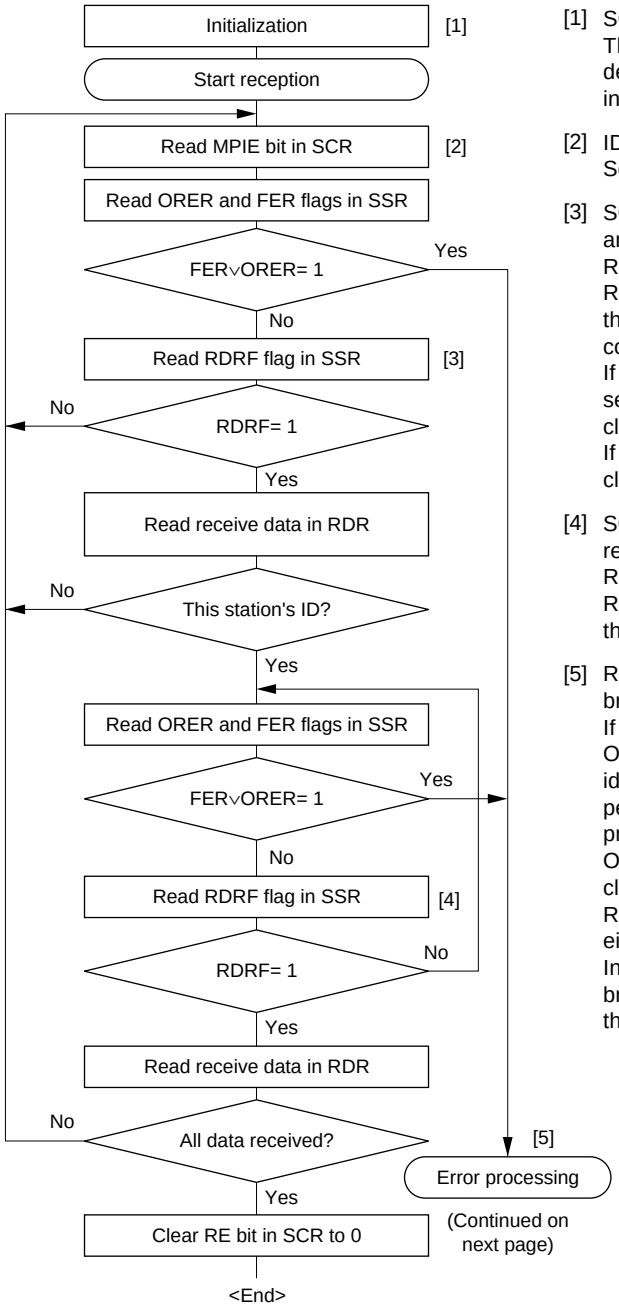

[1] SCI initialization:
The RxD pin is automatically designated as the receive data input pin.

[2] ID reception cycle:
Set the MPIE bit in SCR to 1.

[3] SCI status check, ID reception and comparison:
Read SSR and check that the RDRF flag is set to 1, then read the receive data in RDR and compare it with this station's ID.
If the data is not this station's ID, set the MPIE bit to 1 again, and clear the RDRF flag to 0.
If the data is this station's ID, clear the RDRF flag to 0.

[4] SCI status check and data reception:
Read SSR and check that the RDRF flag is set to 1, then read the data in RDR.

[5] Receive error processing and break detection:
If a receive error occurs, read the ORER and FER flags in SSR to identify the error. After performing the appropriate error processing, ensure that the ORER and FER flags are all cleared to 0.
Reception cannot be resumed if either of these flags is set to 1.
In the case of a framing error, a break can be detected by reading the RxD pin value.

Figure 14-12 Sample Multiprocessor Serial Reception Flowchart

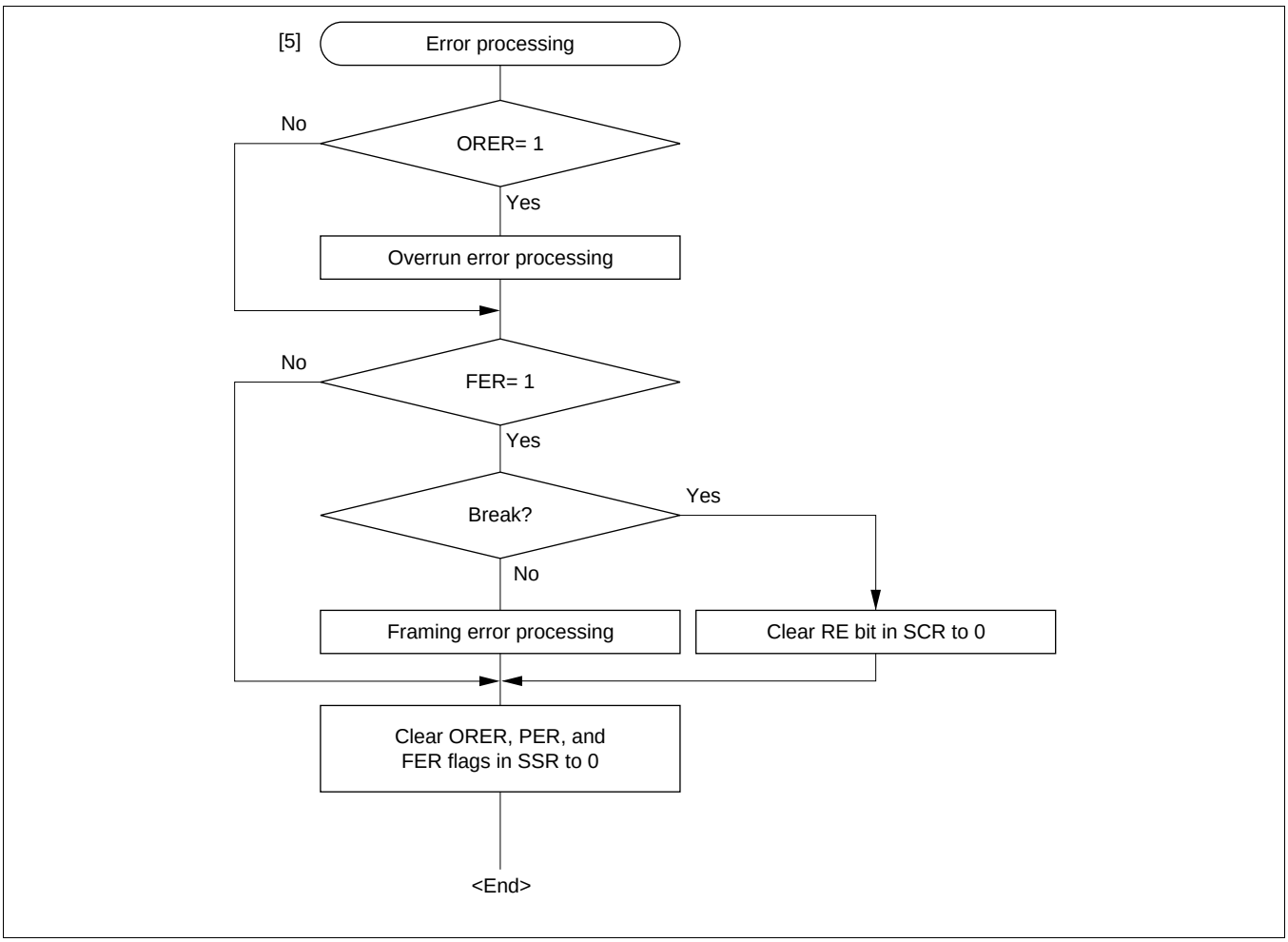

Figure 14-12 Sample Multiprocessor Serial Reception Flowchart (cont)

Figure 14-13 shows an example of SCI operation for multiprocessor format reception.

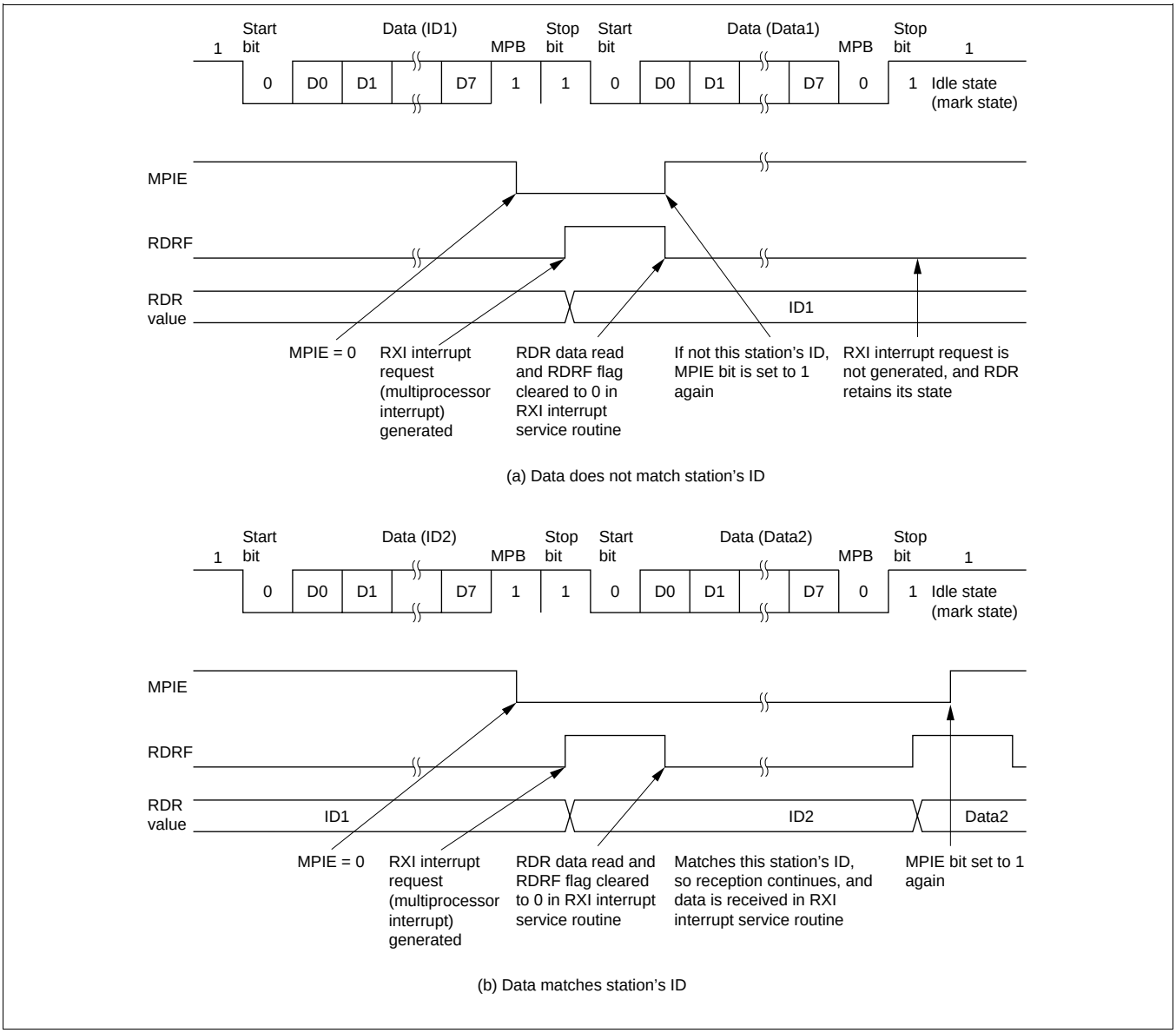

Figure 14-13 Example of SCI Operation in Reception (Example with 8-Bit Data, Multiprocessor Bit, One Stop Bit)

14.3.4 Operation in Clocked Synchronous Mode

In clocked synchronous mode, data is transmitted or received in synchronization with clock pulses, making it suitable for high-speed serial communication.

Inside the SCI, the transmitter and receiver are independent units, enabling full-duplex communication by use of a common clock. Both the transmitter and the receiver also have a double-buffered structure, so that data can be read or written during transmission or reception, enabling continuous data transfer.

Figure 14-14 shows the general format for clocked synchronous serial communication.

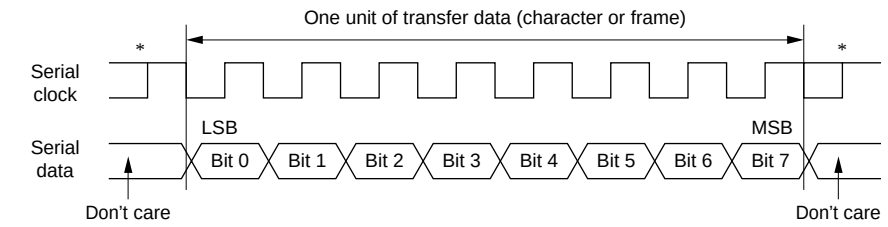

Note: * High except in continuous transfer

Figure 14-14 Data Format in Synchronous Communication

In clocked synchronous serial communication, data on the transmission line is output from one falling edge of the serial clock to the next. Data confirmation is guaranteed at the rising edge of the serial clock.

In clocked serial communication, one character consists of data output starting with the LSB and ending with the MSB. After the MSB is output, the transmission line holds the MSB state.

In clocked synchronous mode, the SCI receives data in synchronization with the rising edge of the serial clock.

Data Transfer Format: A fixed 8-bit data format is used.

No parity or multiprocessor bits are added.

Clock: Either an internal clock generated by the on-chip baud rate generator or an external serial clock input at the SCK pin can be selected, according to the setting of the C/$\overline{A}$ bit in SMR and the CKE1 and CKE0 bits in SCR. For details of SCI clock source selection, see table 14-9.

When the SCI is operated on an internal clock, the serial clock is output from the SCK pin.

Eight serial clock pulses are output in the transfer of one character, and when no transfer is performed the clock is fixed high. When only receive operations are performed, however, the serial clock is output until an overrun error occurs or the RE bit is cleared to 0. If you want to perform receive operations in units of one character, you should select an external clock as the clock source.

Data Transfer Operations:

- SCI initialization (clocked synchronous mode)

  Before transmitting and receiving data, you should first clear the TE and RE bits in SCR to 0, then initialize the SCI as described below.

  When the operating mode, transfer format, etc., is changed, the TE and RE bits must be cleared to 0 before making the change using the following procedure. When the TE bit is cleared to 0, the TDRE flag is set to 1 and TSR is initialized. Note that clearing the RE bit to 0 does not change the contents of the RDRF, PER, FER, and ORER flags, or the contents of RDR.

  Figure 14-15 shows a sample SCI initialization flowchart.

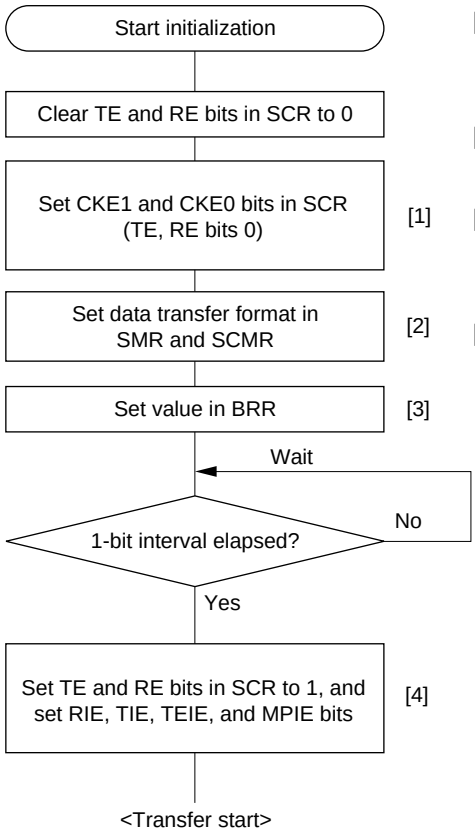

[1] Set the clock selection in SCR. Be sure to clear bits RIE, TIE, TEIE, and MPIE, TE and RE, to 0.

[2] Set the data transfer format in SMR and SCMR.

[3] Write a value corresponding to the bit rate to BRR. Not necessary if an external clock is used.

[4] Wait at least one bit interval, then set the TE bit or RE bit in SCR to 1. Also set the RIE, TIE, TEIE, and MPIE bits. Setting the TE and RE bits enables the TxD and RxD pins to be used.

Note: In simultaneous transmit and receive operations, the TE and RE bits should both be cleared to 0 or set to 1 simultaneously.

Figure 14-15 Sample SCI Initialization Flowchart

- Serial data transmission (clocked synchronous mode)

  Figure 14-16 shows a sample flowchart for serial transmission.

  The following procedure should be used for serial data transmission.

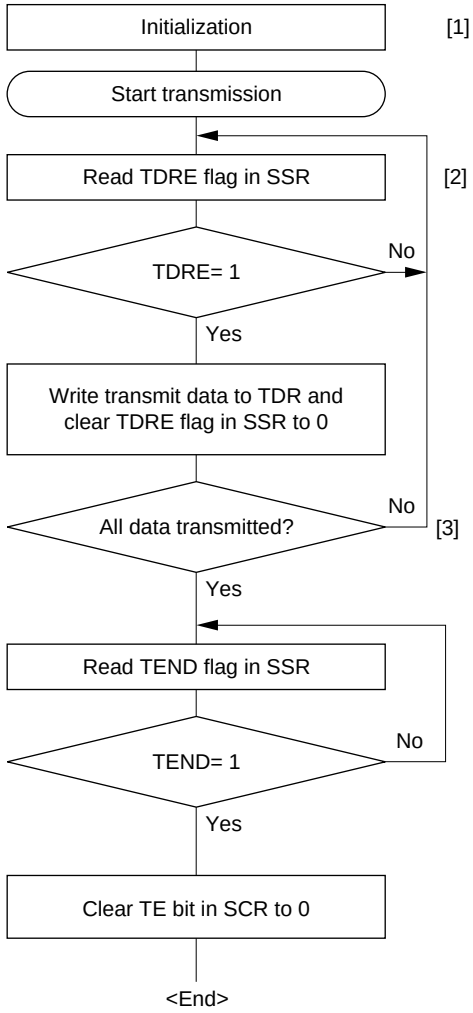

[1] SCI initialization:
The TxD pin is automatically designated as the transmit data output pin.

[2] SCI status check and transmit data write:
Read SSR and check that the TDRE flag is set to 1, then write transmit data to TDR and clear the TDRE flag to 0.

[3] Serial transmission continuation procedure:
To continue serial transmission, be sure to read 1 from the TDRE flag to confirm that writing is possible, then write data to TDR, and then clear the TDRE flag to 0.
Checking and clearing of the TDRE flag is automatic when the DMAC or DTC is activated by a transmit data empty interrupt (TXI) request and data is written to TDR.

Figure 14-16 Sample Serial Transmission Flowchart

In serial transmission, the SCI operates as described below.

[1] The SCI monitors the TDRE flag in SSR, and if is 0, recognizes that data has been written to TDR, and transfers the data from TDR to TSR.

[2] After transferring data from TDR to TSR, the SCI sets the TDRE flag to 1 and starts transmission. If the TIE bit is set to 1 at this time, a transmit data empty interrupt (TXI) is generated.

When clock output mode has been set, the SCI outputs 8 serial clock pulses. When use of an external clock has been specified, data is output synchronized with the input clock.

The serial transmit data is sent from the TxD pin starting with the LSB (bit 0) and ending with the MSB (bit 7).

[3] The SCI checks the TDRE flag at the timing for sending the MSB (bit 7).

If the TDRE flag is cleared to 0, data is transferred from TDR to TSR, and serial transmission of the next frame is started.

If the TDRE flag is set to 1, the TEND flag in SSR is set to 1, the MSB (bit 7) is sent, and the TxD pin maintains its state.

If the TEIE bit in SCR is set to 1 at this time, a TEI interrupt request is generated.

[4] After completion of serial transmission, the SCK pin is fixed.

Figure 14-17 shows an example of SCI operation in transmission.

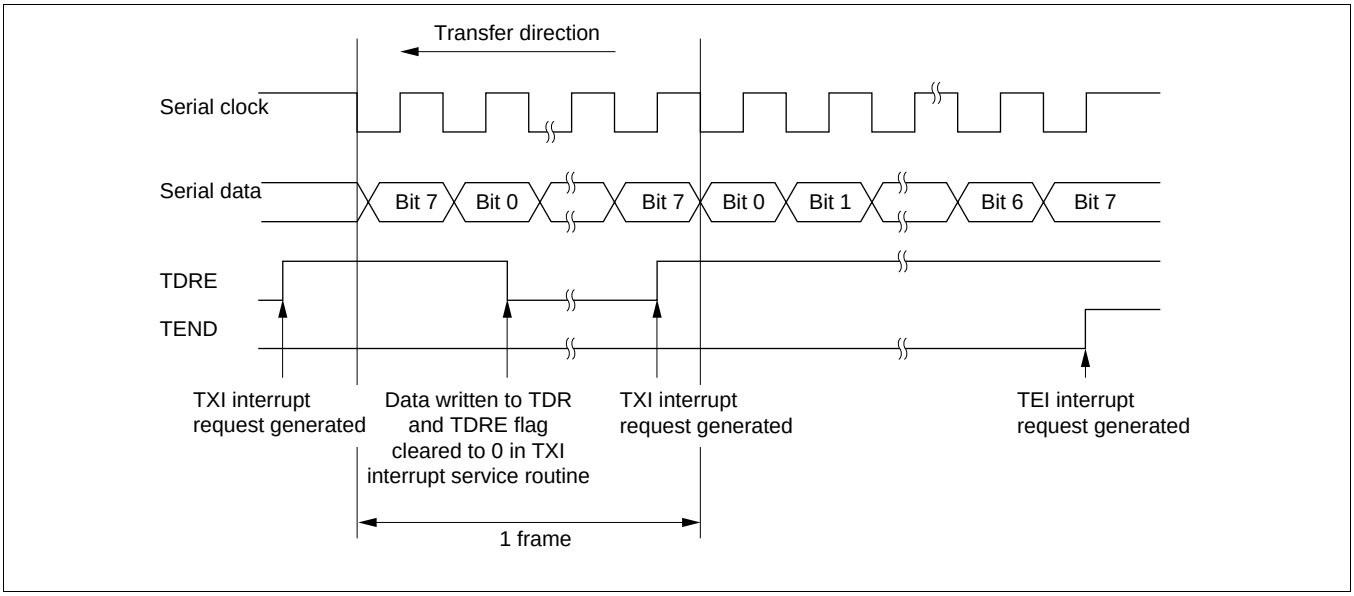

Figure 14-17 Example of SCI Operation in Transmission

- Serial data reception (clocked synchronous mode)

  Figure 14-18 shows a sample flowchart for serial reception.

  The following procedure should be used for serial data reception.

  When changing the operating mode from asynchronous to clocked synchronous, be sure to check that the ORER, PER, and FER flags are all cleared to 0.

  The RDRF flag will not be set if the FER or PER flag is set to 1, and neither transmit nor receive operations will be possible.

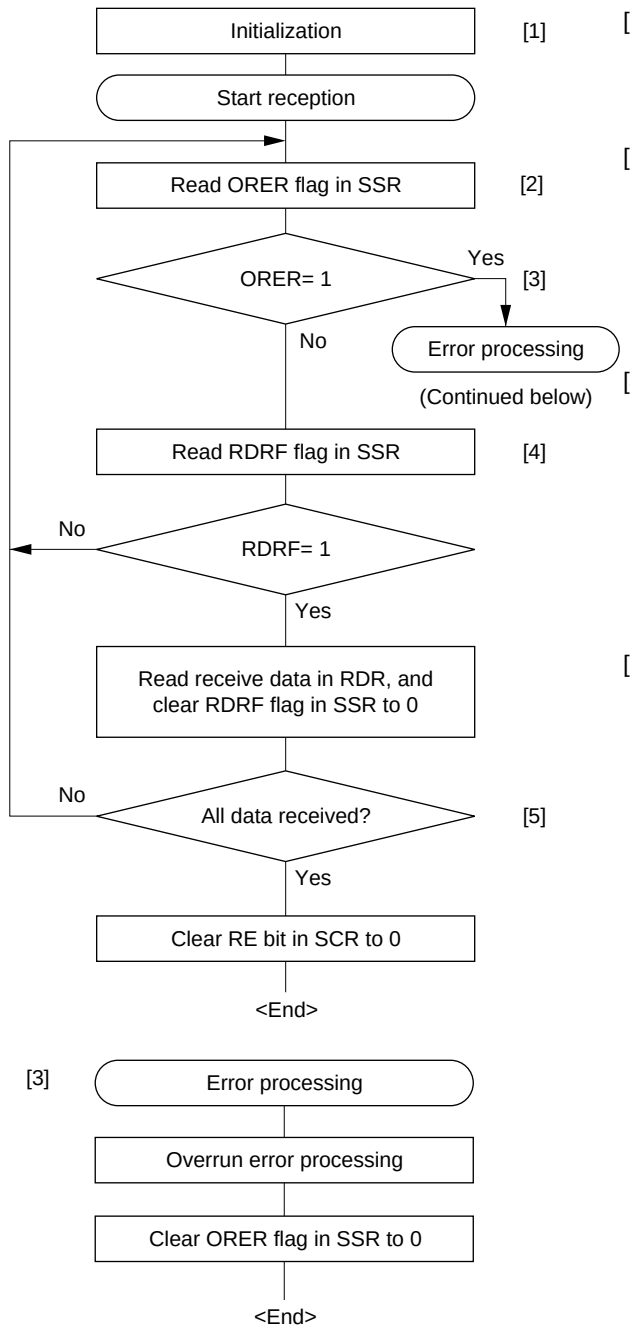

[1] SCI initialization:
The RxD pin is automatically designated as the receive data input pin.

[2] [3] Receive error processing:
If a receive error occurs, read the ORER flag in SSR, and after performing the appropriate error processing, clear the ORER flag to 0. Transfer cannot be resumed if the ORER flag is set to 1.

[4] SCI status check and receive data read:
Read SSR and check that the RDRF flag is set to 1, then read the receive data in RDR and clear the RDRF flag to 0. Transition of the RDRF flag from 0 to 1 can also be identified by an RXI interrupt.

[5] Serial reception continuation procedure:
To continue serial reception, before the MSB (bit 7) of the current frame is received, finish reading the RDRF flag, reading RDR, and clearing the RDRF flag to 0. The RDRF flag is cleared automatically when the DMAC or DTC is activated by a receive data full interrupt (RXI) request and the RDR value is read.

Figure 14-18 Sample Serial Reception Flowchart

In serial reception, the SCI operates as described below.

[1] The SCI performs internal initialization in synchronization with serial clock input or output.

[2] The received data is stored in RSR in LSB-to-MSB order.

After reception, the SCI checks whether the RDRF flag is 0 and the receive data can be transferred from RSR to RDR.

If this check is passed, the RDRF flag is set to 1, and the receive data is stored in RDR. If a receive error is detected in the error check, the operation is as shown in table 14-11.

Neither transmit nor receive operations can be performed subsequently when a receive error has been found in the error check.

[3] If the RIE bit in SCR is set to 1 when the RDRF flag changes to 1, a receive data full interrupt (RXI) request is generated.

Also, if the RIE bit in SCR is set to 1 when the ORER flag changes to 1, a receive error interrupt (ERI) request is generated.

Figure 14-19 shows an example of SCI operation in reception.

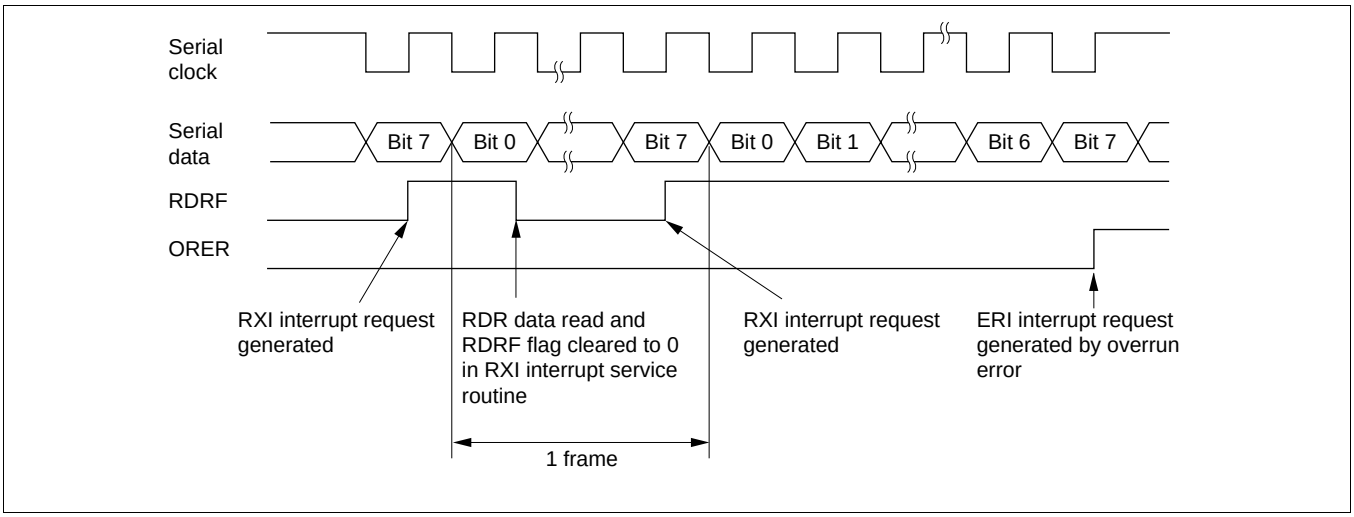

Figure 14-19 Example of SCI Operation in Reception

- Simultaneous serial data transmission and reception (clocked synchronous mode)

  Figure 14-20 shows a sample flowchart for simultaneous serial transmit and receive operations.

  The following procedure should be used for simultaneous serial data transmit and receive operations.

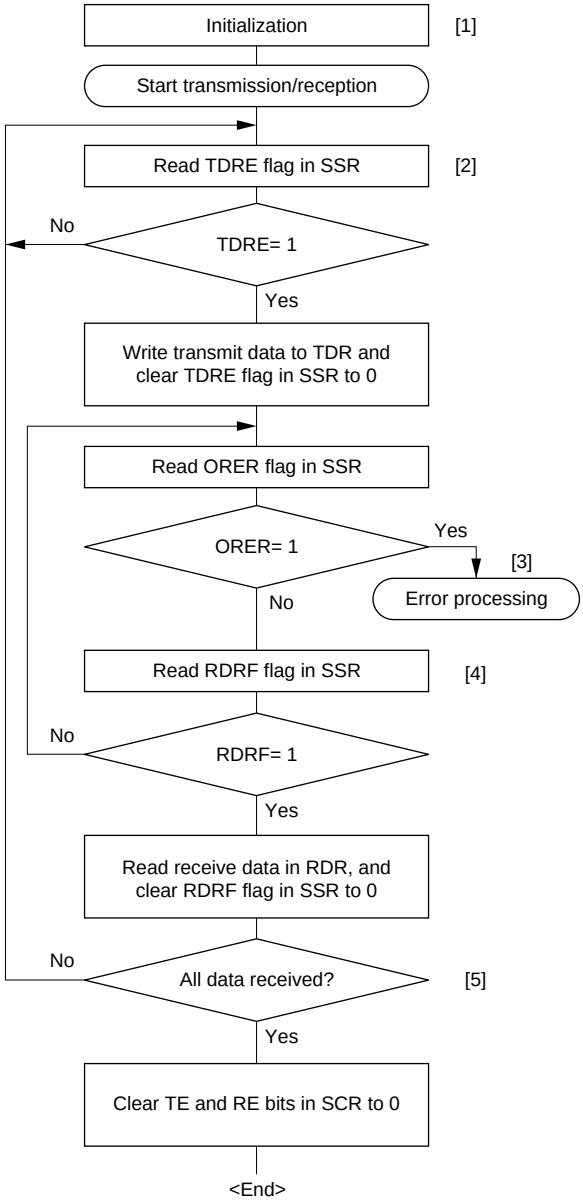

[1] SCI initialization:
The TxD pin is designated as the transmit data output pin, and the RxD pin is designated as the receive data input pin, enabling simultaneous transmit and receive operations.

[2] SCI status check and transmit data write:
Read SSR and check that the TDRE flag is set to 1, then write transmit data to TDR and clear the TDRE flag to 0.
Transition of the TDRE flag from 0 to 1 can also be identified by a TXI interrupt.

[3] Receive error processing:
If a receive error occurs, read the ORER flag in SSR, and after performing the appropriate error processing, clear the ORER flag to 0. Transmission/reception cannot be resumed if the ORER flag is set to 1.

[4] SCI status check and receive data read:
Read SSR and check that the RDRF flag is set to 1, then read the receive data in RDR and clear the RDRF flag to 0. Transition of the RDRF flag from 0 to 1 can also be identified by an RXI interrupt.

[5] Serial transmission/reception continuation procedure:
To continue serial transmission/reception, before the MSB (bit 7) of the current frame is received, finish reading the RDRF flag, reading RDR, and clearing the RDRF flag to 0. Also, before the MSB (bit 7) of the current frame is transmitted, read 1 from the TDRE flag to confirm that writing is possible. Then write data to TDR and clear the TDRE flag to 0.
Checking and clearing of the TDRE flag is automatic when the DMAC or DTC is activated by a transmit data empty interrupt (TXI) request and data is written to TDR. Also, the RDRF flag is cleared automatically when the DMAC or DTC is activated by a receive data full interrupt (RXI) request and the RDR value is read.

Note: When switching from transmit or receive operation to simultaneous transmit and receive operations, first clear the TE and RE bits to 0, then set both these bits to 1 simultaneously.

Figure 14-20 Sample Flowchart of Simultaneous Serial Transmit and Receive Operations

14.4 SCI Interrupts

The SCI has four interrupt sources: the transmit-end interrupt (TEI) request, receive-error interrupt (ERI) request, receive-data-full interrupt (RXI) request, and transmit-data-empty interrupt (TXI) request. Table 14-12 shows the interrupt sources and their relative priorities. Individual interrupt sources can be enabled or disabled with the TIE, RIE, and TEIE bits in the SCR. Each kind of interrupt request is sent to the interrupt controller independently.

When the TDRE flag in SSR is set to 1, a TXI interrupt request is generated. When the TEND flag in SSR is set to 1, a TEI interrupt request is generated. A TXI interrupt can activate the DMAC or DTC to perform data transfer. The TDRE flag is cleared to 0 automatically when data transfer is performed by the DMAC or DTC. The DMAC and DTC cannot be activated by a TEI interrupt request.

When the RDRF flag in SSR is set to 1, an RXI interrupt request is generated. When the ORER, PER, or FER flag in SSR is set to 1, an ERI interrupt request is generated. An RXI interrupt can activate the DMAC or DTC to perform data transfer. The RDRF flag is cleared to 0 automatically when data transfer is performed by the DMAC or DTC. The DMAC and DTC cannot be activated by an ERI interrupt request.

Also note that the DMAC cannot be activated by an SCI channel 2 interrupt.

Table 14-12 SCI Interrupt Sources

Channel	Interrupt Source	Description	DTC Activation	DMAC Activation	Priority*
0	ERI	Interrupt due to receive error (ORER, FER, or PER)	Not possible	Not possible	High
	RXI	Interrupt due to receive data full state (RDRF)	Possible	Possible	
	TXI	Interrupt due to transmit data empty state (TDRE)	Possible	Possible	
	TEI	Interrupt due to transmission end (TEND)	Not possible	Not possible	
1	ERI	Interrupt due to receive error (ORER, FER, or PER)	Not possible	Not possible	
	RXI	Interrupt due to receive data full state (RDRF)	Possible	Possible	
	TXI	Interrupt due to transmit data empty state (TDRE)	Possible	Possible	
	TEI	Interrupt due to transmission end (TEND)	Not possible	Not possible	
2	ERI	Interrupt due to receive error (ORER, FER, or PER)	Not possible	Not possible	
	RXI	Interrupt due to receive data full state (RDRF)	Possible	Not possible	
	TXI	Interrupt due to transmit data empty state (TDRE)	Possible	Not possible	
	TEI	Interrupt due to transmission end (TEND)	Not possible	Not possible	Low

Note: * This table shows the initial state immediately after a reset. Relative priorities among channels can be changed by means of ICR and IPR.

A TEI interrupt is requested when the TEND flag is set to 1 while the TEIE bit is set to 1. The TEND flag is cleared at the same time as the TDRE flag. Consequently, if a TEI interrupt and a TXI interrupt are requested simultaneously, the TXI interrupt may be accepted first, with the result that the TDRE and TEND flags are cleared. Note that the TEI interrupt will not be accepted in this case.

14.5 Usage Notes

The following points should be noted when using the SCI.

Relation between Writes to TDR and the TDRE Flag
The TDRE flag in SSR is a status flag that indicates that transmit data has been transferred from TDR to TSR. When the SCI transfers data from TDR to TSR, the TDRE flag is set to 1.

Data can be written to TDR regardless of the state of the TDRE flag. However, if new data is written to TDR when the TDRE flag is cleared to 0, the data stored in TDR will be lost since it has not yet been transferred to TSR. It is therefore essential to check that the TDRE flag is set to 1 before writing transmit data to TDR.

Operation when Multiple Receive Errors Occur Simultaneously
If a number of receive errors occur at the same time, the state of the status flags in SSR is as shown in table 14-13. If there is an overrun error, data is not transferred from RSR to RDR, and the receive data is lost.

Table 14-13 State of SSR Status Flags and Transfer of Receive Data

SSR Status Flags					Receive Data Transfer
RDRF	ORER	FER	PER	RSR to RDR	Receive Error Status
1	1	0	0	×	Overrun error
0	0	1	0	○	Framing error
0	0	0	1	○	Parity error
1	1	1	0	×	Overrun error + framing error
1	1	0	1	×	Overrun error + parity error
0	0	1	1	○	Framing error + parity error
1	1	1	1	×	Overrun error + framing error + parity error

Notes: ○: Receive data is transferred from RSR to RDR.
×: Receive data is not transferred from RSR to RDR.

Break Detection and Processing (Asynchronous Mode Only): When framing error (FER) detection is performed, a break can be detected by reading the RxD pin value directly. In a break, the input from the RxD pin becomes all 0s, and so the FER flag is set, and the parity error flag (PER) may also be set.

Note that, since the SCI continues the receive operation after receiving a break, even if the FER flag is cleared to 0, it will be set to 1 again.

Sending a Break (Asynchronous Mode Only): The TxD pin has a dual function as an I/O port whose direction (input or output) is determined by DR and DDR. This can be used to send a break.

Between serial transmission initialization and setting of the TE bit to 1, the mark state is replaced by the value of DR (the pin does not function as the TxD pin until the TE bit is set to 1). Consequently, DDR and DR for the port corresponding to the TxD pin are first set to 1.

To send a break during serial transmission, first clear DR to 0, then clear the TE bit to 0.

When the TE bit is cleared to 0, the transmitter is initialized regardless of the current transmission state, the TxD pin becomes an I/O port, and 0 is output from the TxD pin.

Receive Error Flags and Transmit Operations (Clocked Synchronous Mode Only):
Transmission cannot be started when a receive error flag (ORER, PER, or FER) is set to 1, even if the TDRE flag is cleared to 0. Be sure to clear the receive error flags to 0 before starting transmission.

Note also that receive error flags cannot be cleared to 0 even if the RE bit is cleared to 0.

Receive Data Sampling Timing and Reception Margin in Asynchronous Mode:
In asynchronous mode, the SCI operates on a basic clock with a frequency of 16 times the transfer rate.

In reception, the SCI samples the falling edge of the start bit using the basic clock, and performs internal synchronization. Receive data is latched internally at the rising edge of the 8th pulse of the basic clock. This is illustrated in figure 14-21.

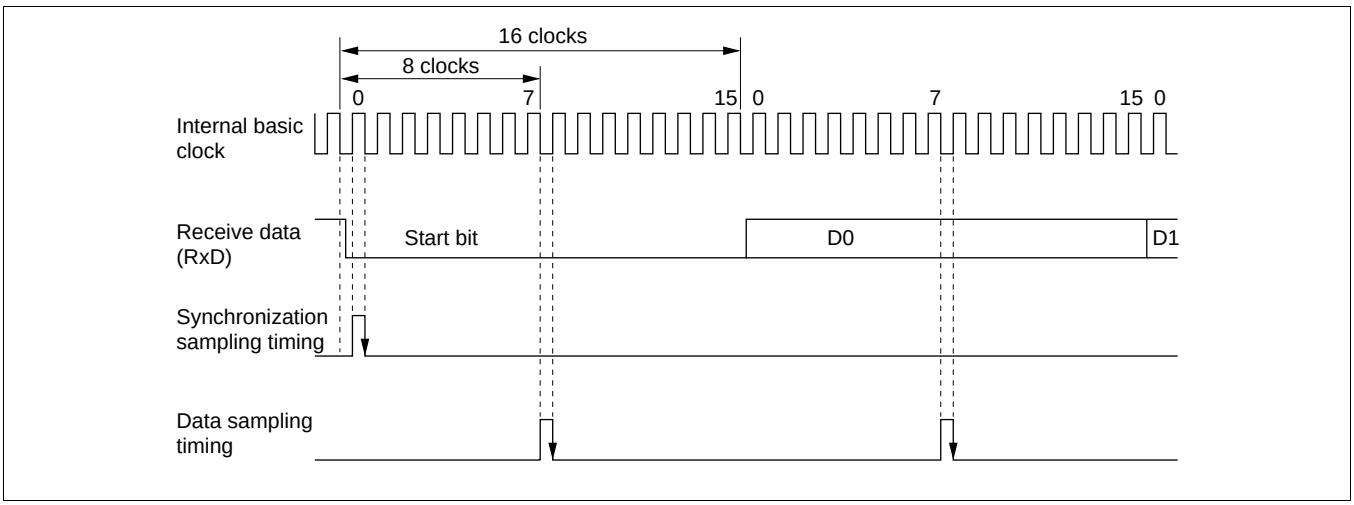

Figure 14-21 Receive Data Sampling Timing in Asynchronous Mode

Thus the reception margin in asynchronous mode is given by formula (1) below.

$$M = \left| \left(0.5 - \frac{1}{2N}\right) - (L - 0.5)\,F - \frac{|D - 0.5|}{N}(1 + F) \right| \times 100\%$$

... Formula (1)

Where M : Reception margin (%)
N : Ratio of bit rate to clock (N = 16)
D : Clock duty (D = 0 to 1.0)
L : Frame length (L = 9 to 12)
F : Absolute value of clock rate deviation

Assuming values of F = 0 and D = 0.5 in formula (1), a reception margin of 46.875% is given by formula (2) below.

When D = 0.5 and F = 0,

$$M = (0.5 - \frac{1}{2 \times 16}) \times 100\%$$

$$= 46.875\% \qquad \text{... Formula (2)}$$

However, this is only the computed value, and a margin of 20% to 30% should be allowed in system design.

Restrictions on Use of DMAC or DTC

- When an external clock source is used as the serial clock, the transmit clock should not be input until at least 5 ø clock cycles after TDR is updated by the DMAC or DTC. Misoperation may occur if the transmit clock is input within 4 ø clocks after TDR is updated. (Figure 14-22)
- When RDR is read by the DMAC or DTC, be sure to set the activation source to the relevant SCI reception data full interrupt (RXI).

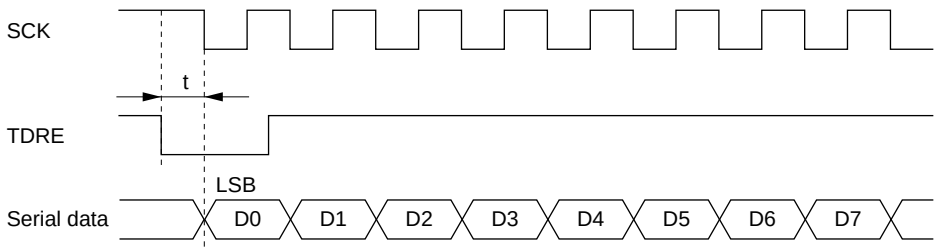

Note: When operating on an external clock, set t >4 clocks.

Figure 14-22 Example of Clocked Synchronous Transmission by DTC

Operation before mode transition (for the H8S/2398, H8S/2394, H8S/2392, and H8S/2390)

Before a mode transition to module stop mode or software standby mode, SCR should be initialized first, then SMR, BRR, and SCMR should be initialized.

Section 15 Smart Card Interface

15.1 Overview

SCI supports an IC card (Smart Card) interface conforming to ISO/IEC 7816-3 (Identification Card) as a serial communication interface extension function.

Switching between the normal serial communication interface and the Smart Card interface is carried out by means of a register setting.

15.1.1 Features

Features of the Smart Card interface supported by the H8S/2357 Group are as follows.

- Asynchronous mode
  - Data length: 8 bits
  - Parity bit generation and checking
  - Transmission of error signal (parity error) in receive mode
  - Error signal detection and automatic data retransmission in transmit mode
  - Direct convention and inverse convention both supported
- On-chip baud rate generator allows any bit rate to be selected
- Three interrupt sources
  - Three interrupt sources (transmit data empty, receive data full, and transmit/receive error) that can issue requests independently
  - The transmit data empty interrupt and receive data full interrupt can activate the DMA controller (DMAC) or data transfer controller (DTC) to execute data transfer

15.1.2 Block Diagram

Figure 15-1 shows a block diagram of the Smart Card interface.

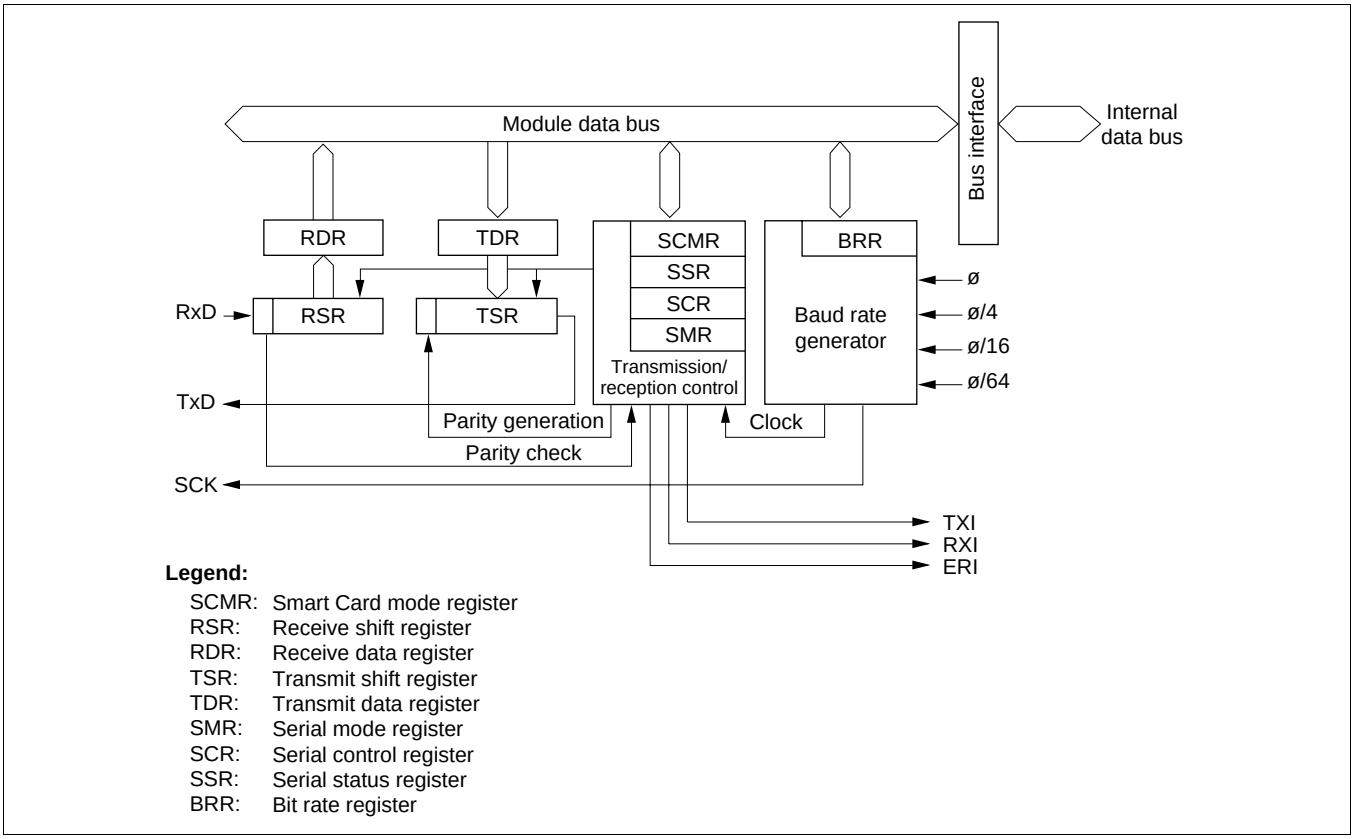

Figure 15-1 Block Diagram of Smart Card Interface

15.1.3 Pin Configuration

Table 15-1 shows the Smart Card interface pin configuration.

Table 15-1 Smart Card Interface Pins

Channel	Pin Name	Symbol	I/O	Function
0	Serial clock pin 0	SCK0	I/O	SCI0 clock input/output
	Receive data pin 0	RxD0	Input	SCI0 receive data input
	Transmit data pin 0	TxD0	Output	SCI0 transmit data output
1	Serial clock pin 1	SCK1	I/O	SCI1 clock input/output
	Receive data pin 1	RxD1	Input	SCI1 receive data input
	Transmit data pin 1	TxD1	Output	SCI1 transmit data output
2	Serial clock pin 2	SCK2	I/O	SCI2 clock input/output
	Receive data pin 2	RxD2	Input	SCI2 receive data input
	Transmit data pin 2	TxD2	Output	SCI2 transmit data output

15.1.4 Register Configuration

Table 15-2 shows the registers used by the Smart Card interface. Details of SMR, BRR, SCR, TDR, RDR, and MSTPCR are the same as for the normal SCI function: see the register descriptions in section 14, Serial Communication Interface (SCI).

Table 15-2 Smart Card Interface Registers

Channel	Name	Abbreviation	R/W	Initial Value	Address*[1]
0	Serial mode register 0	SMR0	R/W	H'00	H'FF78
	Bit rate register 0	BRR0	R/W	H'FF	H'FF79
	Serial control register 0	SCR0	R/W	H'00	H'FF7A
	Transmit data register 0	TDR0	R/W	H'FF	H'FF7B
	Serial status register 0	SSR0	R/(W)*[2]	H'84	H'FF7C
	Receive data register 0	RDR0	R	H'00	H'FF7D
	Smart Card mode register 0	SCMR0	R/W	H'F2	H'FF7E
1	Serial mode register 1	SMR1	R/W	H'00	H'FF80
	Bit rate register 1	BRR1	R/W	H'FF	H'FF81
	Serial control register 1	SCR1	R/W	H'00	H'FF82
	Transmit data register 1	TDR1	R/W	H'FF	H'FF83
	Serial status register 1	SSR1	R/(W)*[2]	H'84	H'FF84
	Receive data register 1	RDR1	R	H'00	H'FF85
	Smart Card mode register 1	SCMR1	R/W	H'F2	H'FF86
2	Serial mode register 2	SMR2	R/W	H'00	H'FF88
	Bit rate register 2	BRR2	R/W	H'FF	H'FF89
	Serial control register 2	SCR2	R/W	H'00	H'FF8A
	Transmit data register 2	TDR2	R/W	H'FF	H'FF8B
	Serial status register 2	SSR2	R/(W)*[2]	H'84	H'FF8C
	Receive data register 2	RDR2	R	H'00	H'FF8D
	Smart Card mode register 2	SCMR2	R/W	H'F2	H'FF8E
All	Module stop control register	MSTPCR	R/W	H'3FFF	H'FF3C

Notes: 1. Lower 16 bits of the address.
2. Can only be written with 0 for flag clearing.

15.2 Register Descriptions

Registers added with the Smart Card interface and bits for which the function changes are described here.

15.2.1 Smart Card Mode Register (SCMR)

Bit	:	7	6	5	4	3	2	1	0
		—	—	—	—	SDIR	SINV	—	SMIF
Initial value	:	1	1	1	1	0	0	1	0
R/W	:	—	—	—	—	R/W	R/W	—	R/W

SCMR is an 8-bit readable/writable register that selects the Smart Card interface function.

SCMR is initialized to H'F2 by a reset, and in standby mode or module stop mode.

Bits 7 to 4—Reserved: These bits cannot be modified and are always read as 1.

Bit 3—Smart Card Data Transfer Direction (SDIR): Selects the serial/parallel conversion format.

Bit 3 SDIR	Description	
0	TDR contents are transmitted LSB-first Receive data is stored in RDR LSB-first	(Initial value)
1	TDR contents are transmitted MSB-first Receive data is stored in RDR MSB-first	

Bit 2—Smart Card Data Invert (SINV): Specifies inversion of the data logic level. This function is used together with the SDIR bit for communication with an inverse convention card. The SINV bit does not affect the logic level of the parity bit. For parity-related setting procedures, see section 15.3.4, Register Settings.

Bit 2 SINV	Description	
0	TDR contents are transmitted as they are Receive data is stored as it is in RDR	(Initial value)
1	TDR contents are inverted before being transmitted Receive data is stored in inverted form in RDR	

Bit 1—Reserved: This bit cannot be modified and is always read as 1.

Bit 0—Smart Card Interface Mode Select (SMIF): Enables or disables the Smart Card interface function.

Bit 0 SMIF	Description	
0	Smart Card interface function is disabled	(Initial value)
1	Smart Card interface function is enabled	

15.2.2 Serial Status Register (SSR)

Bit :	7	6	5	4	3	2	1	0
	TDRE	RDRF	ORER	ERS	PER	TEND	MPB	MPBT
Initial value :	1	0	0	0	0	1	0	0
R/W :	R/(W)*	R/(W)*	R/(W)*	R/(W)*	R/(W)*	R	R	R/W

Note: * Only 0 can be written to bits 7 to 3, to clear these flags.

Bit 4 of SSR has a different function in Smart Card interface mode. Coupled with this, the setting conditions for bit 2, TEND, are also different.

Bits 7 to 5—Operate in the same way as for the normal SCI. For details, see section 14.2.7, Serial Status Register (SSR).

Bit 4—Error Signal Status (ERS): In Smart Card interface mode, bit 4 indicates the status of the error signal sent back from the receiving end in transmission. Framing errors are not detected in Smart Card interface mode.

Bit 4 ERS	Description
0	[Clearing conditions] (Initial value) • Upon reset, and in standby mode or module stop mode • When 0 is written to ERS after reading ERS = 1
1	[Setting condition] When the low level of the error signal is sampled

Note: Clearing the TE bit in SCR to 0 does not affect the ERS flag, which retains its previous state.

Bits 3 to 0—Operate in the same way as for the normal SCI. For details, see section 14.2.7, Serial Status Register (SSR).

However, the setting conditions for the TEND bit, are as shown below.

Bit 2 TEND	Description
0	[Clearing conditions] (Initial value) • When 0 is written to TDRE after reading TDRE = 1 • When the DMAC or DTC is activated by a TXI interrupt and write data to TDR
1	[Setting conditions] • Upon reset, and in standby mode or module stop mode • When the TE bit in SCR is 0 and the ERS bit is also 0 • When TDRE = 1 and ERS = 0 (normal transmission) 2.5 etu after transmission of a 1-byte serial character when GM = 0 • When TDRE = 1 and ERS = 0 (normal transmission) 1.0 etu after transmission of a 1-byte serial character when GM = 1

Note: etu: Elementary Time Unit (time for transfer of 1 bit)

15.2.3 Serial Mode Register (SMR)

Bit :	7	6	5	4	3	2	1	0
	GM	CHR	PE	O/$\overline{E}$	STOP	MP	CKS1	CKS0
Initial value :	0	0	0	0	0	0	0	0
Set value* :	GM	0	1	O/$\overline{E}$	1	0	CKS1	CKS0
R/W :	R/W	R/W	R/W	R/W	R/W	R/W	R/W	R/W

Note: * When the Smart Card interface is used, be sure to make the 0 or 1 setting shown for bits 6, 5, 3, and 2.

The function of bit 7 of SMR changes in Smart Card interface mode.

Bit 7—GSM Mode (GM): Sets the Smart Card interface function to GSM mode.

This bit is cleared to 0 when the normal Smart Card interface is used. In GSM mode, this bit is set to 1, the timing of setting of the TEND flag that indicates transmission completion is advanced and clock output control mode addition is performed. The contents of the clock output control mode addition are specified by bits 1 and 0 of the serial control register (SCR).

Bit 7 GM	Description
0	Normal Smart Card interface mode operation (Initial value) • TEND flag generation 12.5 etu after beginning of start bit • Clock output ON/OFF control only
1	GSM mode Smart Card interface mode operation • TEND flag generation 11.0 etu after beginning of start bit • High/low fixing control possible in addition to clock output ON/OFF control (set by SCR)

Note: etu: Elementary time unit (time for transfer of 1 bit)

Bits 6 to 0—Operate in the same way as for the normal SCI.

For details, see section 14.2.5, Serial Mode Register (SMR).

15.2.4 Serial Control Register (SCR)

Bit :	7	6	5	4	3	2	1	0
	TIE	RIE	TE	RE	MPIE	TEIE	CKE1	CKE0
Initial value :	0	0	0	0	0	0	0	0
R/W :	R/W	R/W	R/W	R/W	R/W	R/W	R/W	R/W

In Smart Card interface mode, the function of bits 1 and 0 of SCR changes when bit 7 of the serial mode register (SMR) is set to 1.

Bits 7 to 2—Operate in the same way as for the normal SCI.

For details, see section 14.2.6, Serial Control Register (SCR).

Bits 1 and 0—Clock Enable 1 and 0 (CKE1, CKE0): These bits are used to select the SCI clock source and enable or disable clock output from the SCK pin.

In Smart Card interface mode, in addition to the normal switching between clock output enabling and disabling, the clock output can be specified as to be fixed high or low.

SCMR	SMR	SCR Setting		
SMIF	**C/$\overline{A}$, GM**	**CKE1**	**CKE0**	**SCK Pin Function**
0	See the SCI			
1	0	0	0	Operates as port I/O pin
1	0	0	1	Outputs clock as SCK output pin
1	1	0	0	Operates as SCK output pin, with output fixed low
1	1	0	1	Outputs clock as SCK output pin
1	1	1	0	Operates as SCK output pin, with output fixed high
1	1	1	1	Outputs clock as SCK output pin

15.3 Operation

15.3.1 Overview

The main functions of the Smart Card interface are as follows.

- One frame consists of 8-bit data plus a parity bit.
- In transmission, a guard time of at least 2 etu (Elementary Time Unit: the time for transfer of 1 bit) is left between the end of the parity bit and the start of the next frame.
- If a parity error is detected during reception, a low error signal level is output for one etu period, 10.5 etu after the start bit.
- If the error signal is sampled during transmission, the same data is transmitted automatically after the elapse of 2 etu or longer.
- Only asynchronous communication is supported; there is no clocked synchronous communication function.

15.3.2 Pin Connections

Figure 15-2 shows a schematic diagram of Smart Card interface related pin connections.

In communication with an IC card, since both transmission and reception are carried out on a single data transmission line, the TxD pin and RxD pin should be connected with the LSI pin. The data transmission line should be pulled up to the V_{CC} power supply with a resistor.

When the clock generated on the Smart Card interface is used by an IC card, the SCK pin output is input to the CLK pin of the IC card. No connection is needed if the IC card uses an internal clock.

LSI port output is used as the reset signal.

Other pins must normally be connected to the power supply or ground.

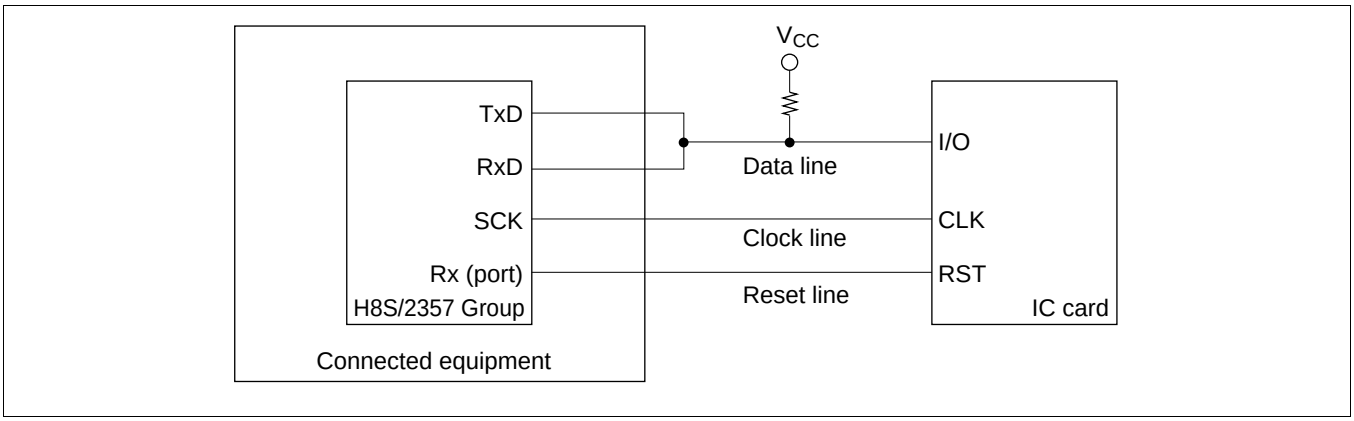

Figure 15-2 Schematic Diagram of Smart Card Interface Pin Connections

Note: If an IC card is not connected, and the TE and RE bits are both set to 1, closed transmission/reception is possible, enabling self-diagnosis to be carried out.

15.3.3 Data Format

Figure 15-3 shows the Smart Card interface data format. In reception in this mode, a parity check is carried out on each frame, and if an error is detected an error signal is sent back to the transmitting end, and retransmission of the data is requested. If an error signal is sampled during transmission, the same data is retransmitted.

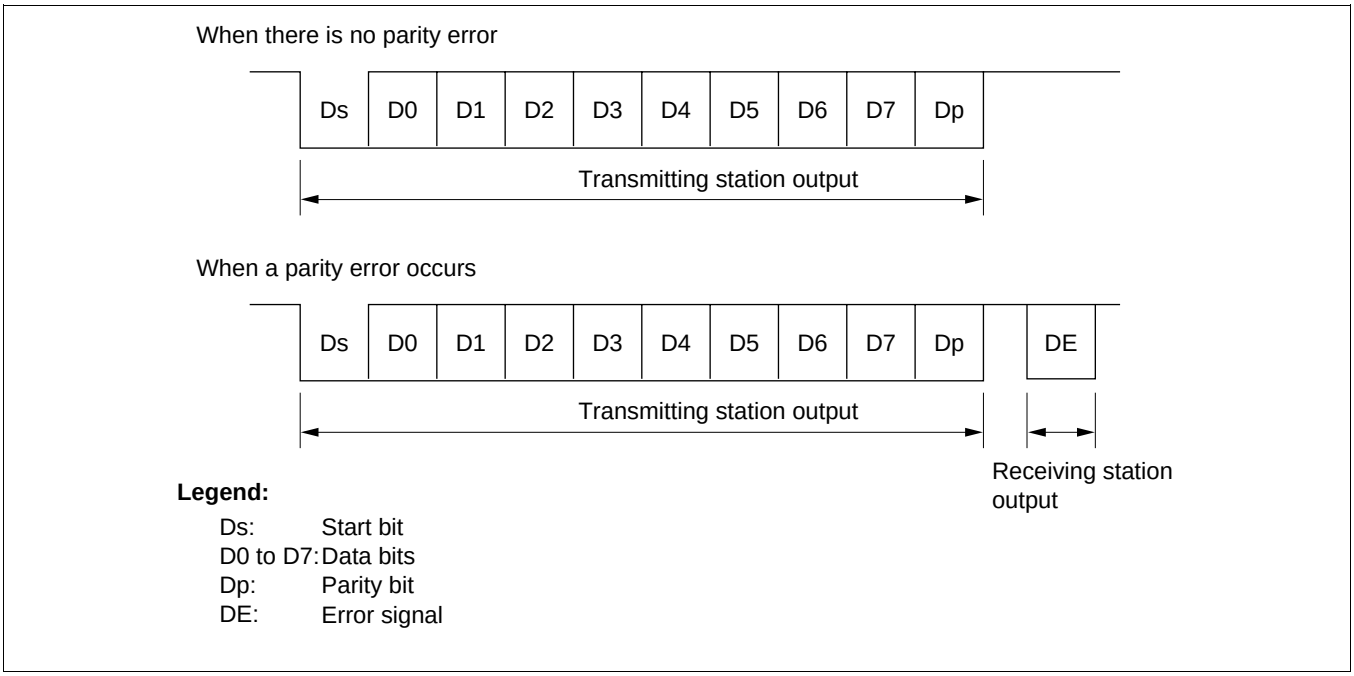

Figure 15-3 Smart Card Interface Data Format

The operation sequence is as follows.

[1] When the data line is not in use it is in the high-impedance state, and is fixed high with a pull-up resistor.

[2] The transmitting station starts transfer of one frame of data. The data frame starts with a start bit (Ds, low-level), followed by 8 data bits (D0 to D7) and a parity bit (Dp).

[3] With the Smart Card interface, the data line then returns to the high-impedance state. The data line is pulled high with a pull-up resistor.

[4] The receiving station carries out a parity check.

If there is no parity error and the data is received normally, the receiving station waits for reception of the next data.

If a parity error occurs, however, the receiving station outputs an error signal (DE, low-level) to request retransmission of the data. After outputting the error signal for the prescribed length of time, the receiving station places the signal line in the high-impedance state again. The signal line is pulled high again by a pull-up resistor.

[5] If the transmitting station does not receive an error signal, it proceeds to transmit the next data frame.

If it does receive an error signal, however, it returns to step [2] and retransmits the erroneous data.

15.3.4 Register Settings

Table 15-3 shows a bit map of the registers used by the Smart Card interface.

Bits indicated as 0 or 1 must be set to the value shown. The setting of other bits is described below.

Table 15-3 Smart Card Interface Register Settings

	Bit							
Register	**Bit 7**	**Bit 6**	**Bit 5**	**Bit 4**	**Bit 3**	**Bit 2**	**Bit 1**	**Bit 0**
SMR	GM	0	1	O/$\overline{E}$	1	0	CKS1	CKS0
BRR	BRR7	BRR6	BRR5	BRR4	BRR3	BRR2	BRR1	BRR0
SCR	TIE	RIE	TE	RE	0	0	CKE1*	CKE0
TDR	TDR7	TDR6	TDR5	TDR4	TDR3	TDR2	TDR1	TDR0
SSR	TDRE	RDRF	ORER	ERS	PER	TEND	0	0
RDR	RDR7	RDR6	RDR5	RDR4	RDR3	RDR2	RDR1	RDR0
SCMR	—	—	—	—	SDIR	SINV	—	SMIF

Notes: — : Not used.
* The CKE1 bit must be cleared to 0 when the GM bit in SMR is cleared to 0.

SMR Setting: The GM bit is cleared to 0 in normal Smart Card interface mode, and set to 1 in GSM mode. The O/$\overline{E}$ bit is cleared to 0 if the IC card is of the direct convention type, and set to 1 if of the inverse convention type.

Bits CKS1 and CKS0 select the clock source of the on-chip baud rate generator. See section 15.3.5, Clock.

BRR Setting: BRR is used to set the bit rate. See section 15.3.5, Clock, for the method of calculating the value to be set.

SCR Setting: The function of the TIE, RIE, TE, and RE bits is the same as for the normal SCI. For details, see section 14, Serial Communication Interface (SCI).

Bits CKE1 and CKE0 specify the clock output. When the GM bit in SMR is cleared to 0, set these bits to B'00 if a clock is not to be output, or to B'01 if a clock is to be output. When the GM bit in SMR is set to 1, clock output is performed. The clock output can also be fixed high or low.

Smart Card Mode Register (SCMR) Setting:
The SDIR bit is cleared to 0 if the IC card is of the direct convention type, and set to 1 if of the inverse convention type.

The SINV bit is cleared to 0 if the IC card is of the direct convention type, and set to 1 if of the inverse convention type.

The SMIF bit is set to 1 in the case of the Smart Card interface.

Examples of register settings and the waveform of the start character are shown below for the two types of IC card (direct convention and inverse convention).

- Direct convention (SDIR = SINV = O/$\overline{E}$ = 0)

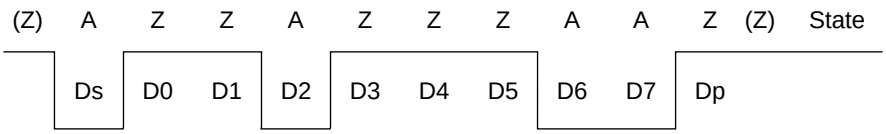

With the direct convention type, the logic 1 level corresponds to state Z and the logic 0 level to state A, and transfer is performed in LSB-first order. The start character data above is H'3B.

The parity bit is 1 since even parity is stipulated for the Smart Card.

- Inverse convention (SDIR = SINV = O/$\overline{E}$ = 1)

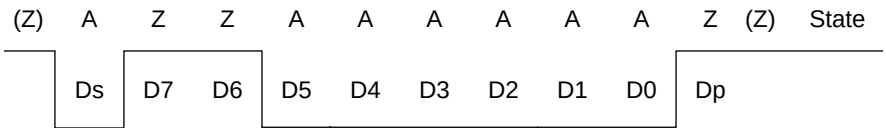

With the inverse convention type, the logic 1 level corresponds to state A and the logic 0 level to state Z, and transfer is performed in MSB-first order. The start character data above is H'3F.

The parity bit is 0, corresponding to state Z, since even parity is stipulated for the Smart Card.

With the H8S/2357 Group, inversion specified by the SINV bit applies only to the data bits, D7 to D0. For parity bit inversion, the O/$\overline{E}$ bit in SMR is set to odd parity mode (the same applies to both transmission and reception).

15.3.5 Clock

Only an internal clock generated by the on-chip baud rate generator can be used as the transmit/receive clock for the Smart Card interface. The bit rate is set with BRR and the CKS1 and CKS0 bits in SMR. The formula for calculating the bit rate is as shown below. Table 15-5 shows some sample bit rates.

If clock output is selected by setting CKE0 to 1, a clock with a frequency of 372 times the bit rate is output from the SCK pin.

$$B = \frac{ø}{1488 \times 2^{2n-1} \times (N + 1)} \times 10^6$$

Where: N = Value set in BRR ($0 \leq N \leq 255$)
B = Bit rate (bit/s)
ø = Operating frequency (MHz)
n = See table 15-4

Table 15-4 Correspondence between n and CKS1, CKS0

n	CKS1	CKS0
0	0	0
1		1
2	1	0
3		1

Table 15-5 Examples of Bit Rate B (bit/s) for Various BRR Settings (When n = 0)

	ø (MHz)						
N	**10.00**	**10.714**	**13.00**	**14.285**	**16.00**	**18.00**	**20.00**
0	13441	14400	17473	19200	21505	24194	26882
1	6720	7200	8737	9600	10753	12097	13441
2	4480	4800	5824	6400	7168	8065	8961

Note: Bit rates are rounded to the nearest whole number.

The method of calculating the value to be set in the bit rate register (BRR) from the operating frequency and bit rate, on the other hand, is shown below. N is an integer, $0 \leq N \leq 255$, and the smaller error is specified.

$$N = \frac{ø}{1488 \times 2^{2n-1} \times B} \times 10^6 - 1$$

Table 15-6 Examples of BRR Settings for Bit Rate B (bit/s) (When n = 0)

	ø (MHz)															
	7.1424		**10.00**		**10.7136**		**13.00**		**14.2848**		**16.00**		**18.00**		**20.00**	
bit/s	**N**	**Error**	**N**	**Error**	**N**	**Error**	**N**	**Error**	**N**	**Error**	**N**	**Error**	**N**	**Error**	**N**	**Error**
9600	0	0.00	1	30	1	25	1	8.99	1	0.00	1	12.01	2	15.99	2	6.60

Table 15-7 Maximum Bit Rate at Various Frequencies (Smart Card Interface Mode)

ø (MHz)	Maximum Bit Rate (bit/s)	N	n
7.1424	9600	0	0
10.00	13441	0	0
10.7136	14400	0	0
13.00	17473	0	0
14.2848	19200	0	0
16.00	21505	0	0
18.00	24194	0	0
20.00	26882	0	0

The bit rate error is given by the following formula:

$$\text{Error (\%)} = \left(\frac{ø}{1488 \times 2^{2n-1} \times B \times (N + 1)} \times 10^6 - 1 \right) \times 100$$

15.3.6 Data Transfer Operations

Initialization: Before transmitting and receiving data, initialize the SCI as described below. Initialization is also necessary when switching from transmit mode to receive mode, or vice versa.

[1] Clear the TE and RE bits in SCR to 0.

[2] Clear the error flags ERS, PER, and ORER in SSR to 0.

[3] Set the O/$\overline{E}$ bit and CKS1 and CKS0 bits in SMR. Clear the C/$\overline{A}$, CHR, and MP bits to 0, and set the STOP and PE bits to 1.

[4] Set the SMIF, SDIR, and SINV bits in SCMR.
When the SMIF bit is set to 1, the TxD and RxD pins are both switched from ports to SCI pins, and are placed in the high-impedance state.

[5] Set the value corresponding to the bit rate in BRR.

[6] Set the CKE0 bit in SCR. Clear the TIE, RIE, TE, RE, MPIE, TEIE and CKE1 bits to 0.
If the CKE0 bit is set to 1, the clock is output from the SCK pin.

[7] Wait at least one bit interval, then set the TIE, RIE, TE, and RE bits in SCR. Do not set the TE bit and RE bit at the same time, except for self-diagnosis.

Serial Data Transmission: As data transmission in Smart Card mode involves error signal sampling and retransmission processing, the processing procedure is different from that for the normal SCI. Figure 15-4 shows a flowchart for transmitting, and figure 15-5 shows the relation between a transmit operation and the internal registers.

[1] Perform Smart Card interface mode initialization as described above in Initialization.

[2] Check that the ERS error flag in SSR is cleared to 0.

[3] Repeat steps [2] and [3] until it can be confirmed that the TEND flag in SSR is set to 1.

[4] Write the transmit data to TDR, clear the TDRE flag to 0, and perform the transmit operation. The TEND flag is cleared to 0.

[5] When transmitting data continuously, go back to step [2].

[6] To end transmission, clear the TE bit to 0.

With the above processing, interrupt servicing or data transfer by the DMAC or DTC is possible.

If transmission ends and the TEND flag is set to 1 while the TIE bit is set to 1 and interrupt requests are enabled, a transmit data empty interrupt (TXI) request will be generated. If an error occurs in transmission and the ERS flag is set to 1 while the RIE bit is set to 1 and interrupt requests are enabled, a transfer error interrupt (ERI) request will be generated.

The timing for setting the TEND flag depends on the value of the GM bit in SMR. The TEND flag set timing is shown in figure 15-6.

If the DMAC or DTC is activated by a TXI request, the number of bytes set in the DMAC or DTC can be transmitted automatically, including automatic retransmission.

For details, see Interrupt Operations and Data Transfer Operation by DMAC or DTC below.

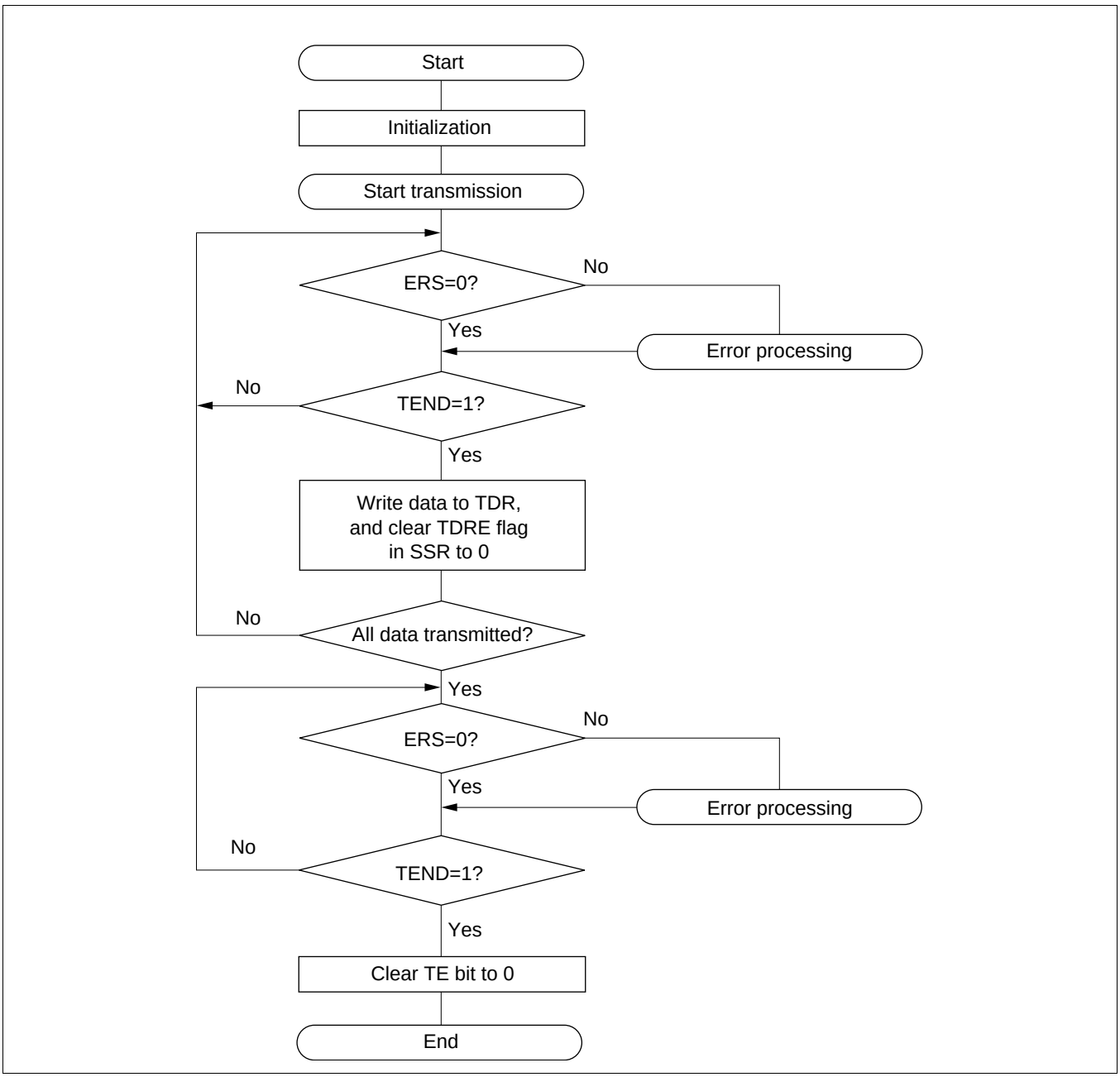

Figure 15-4 Example of Transmission Processing Flow

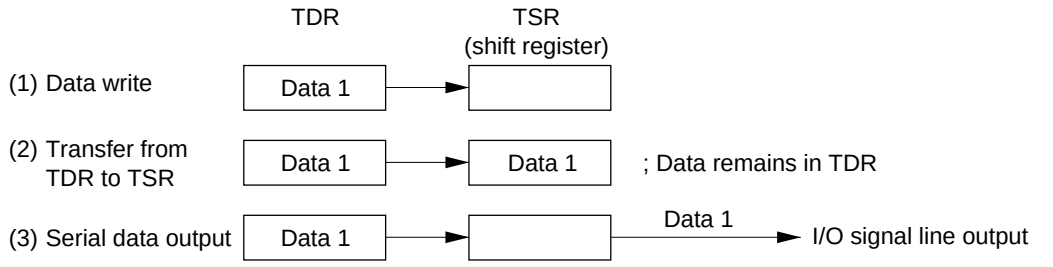

In case of normal transmission: TEND flag is set
In case of transmit error: ERS flag is set
Steps (2) and (3) above are repeated until the TEND flag is set

Note: When the ERS flag is set, it should be cleared until transfer of the last bit (D7 in LSB-first transmission, D0 in MSB-first transmission) of the next transfer data to be transmitted has been completed.

Figure 15-5 Relation Between Transmit Operation and Internal Registers

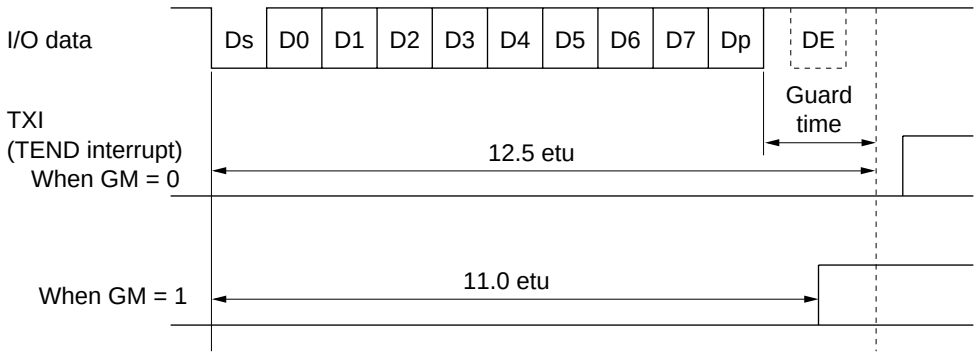

Legend:

Ds: Start bit
D0 to D7: Data bits
Dp: Parity bit
DE: Error signal

Note: etu: Elementary time unit (time for transfer of 1 bit)

Figure 15-6 TEND Flag Generation Timing in Transmission Operation

Serial Data Reception: Data reception in Smart Card mode uses the same processing procedure as for the normal SCI. Figure 15-7 shows an example of the transmission processing flow.

[1] Perform Smart Card interface mode initialization as described above in Initialization.

[2] Check that the ORER flag and PER flag in SSR are cleared to 0. If either is set, perform the appropriate receive error processing, then clear both the ORER and the PER flag to 0.

[3] Repeat steps [2] and [3] until it can be confirmed that the RDRF flag is set to 1.

[4] Read the receive data from RDR.

[5] When receiving data continuously, clear the RDRF flag to 0 and go back to step [2].

[6] To end reception, clear the RE bit to 0.

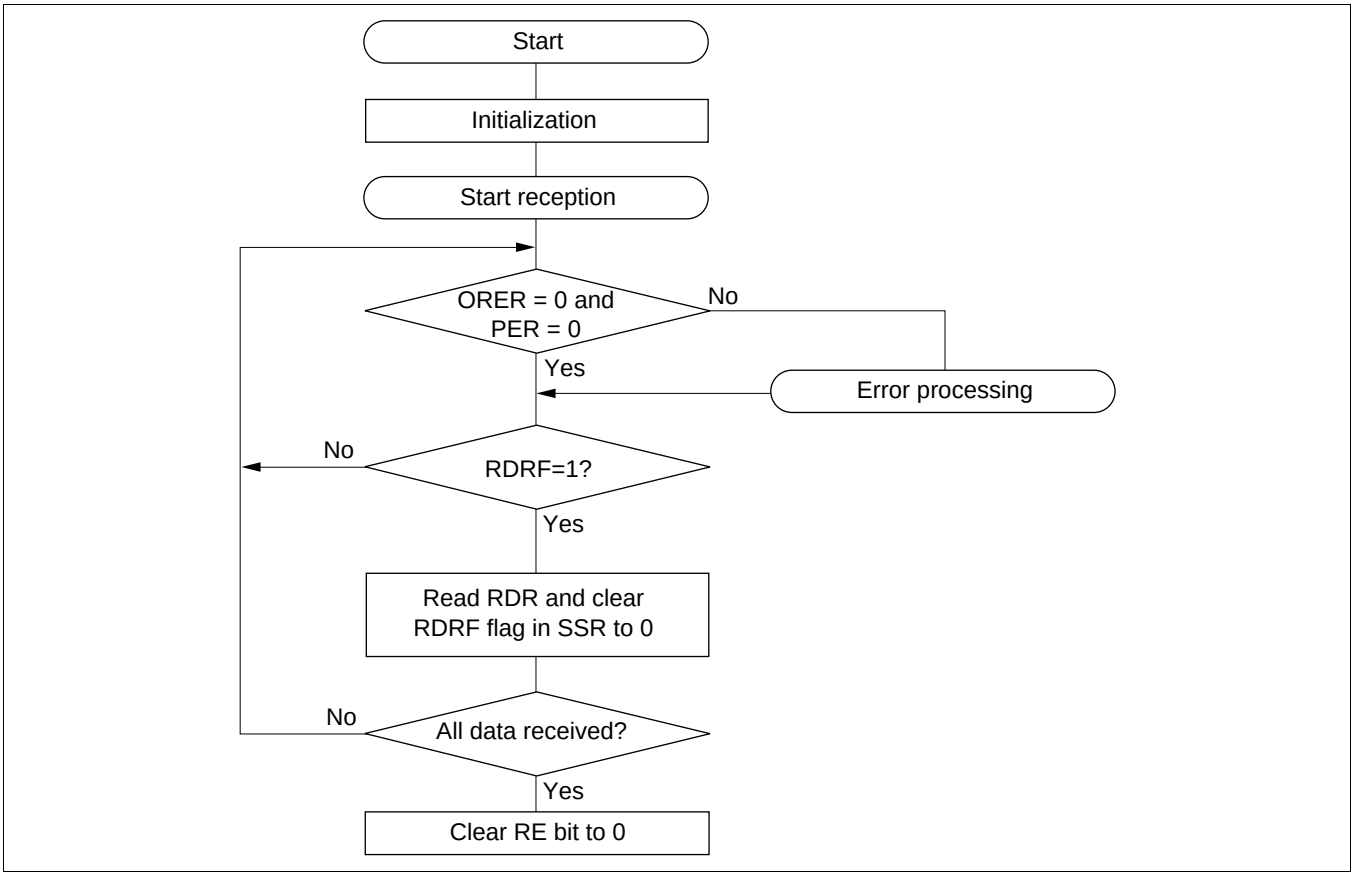

Figure 15-7 Example of Reception Processing Flow

With the above processing, interrupt servicing or data transfer by the DMAC or DTC is possible.

If reception ends and the RDRF flag is set to 1 while the RIE bit is set to 1 and interrupt requests are enabled, a receive data full interrupt (RXI) request will be generated. If an error occurs in reception and either the ORER flag or the PER flag is set to 1, a transfer error interrupt (ERI) request will be generated.

If the DMAC or DTC is activated by an RXI request, the receive data in which the error occurred is skipped, and only the number of bytes of receive data set in the DMAC or DTC are transferred.

For details, see Interrupt Operation and Data Transfer Operation by DMAC or DTC below.

If a parity error occurs during reception and the PER is set to 1, the received data is still transferred to RDR, and therefore this data can be read.

Mode Switching Operation: When switching from receive mode to transmit mode, first confirm that the receive operation has been completed, then start from initialization, clearing RE bit to 0 and setting TE bit to 1. The RDRF flag or the PER and ORER flags can be used to check that the receive operation has been completed.

When switching from transmit mode to receive mode, first confirm that the transmit operation has been completed, then start from initialization, clearing TE bit to 0 and setting RE bit to 1. The TEND flag can be used to check that the transmit operation has been completed.

Fixing Clock Output Level: When the GSM bit in SMR is set to 1, the clock output level can be fixed with bits CKE1 and CKE0 in SCR. At this time, the minimum clock pulse width can be made the specified width.

Figure 15-8 shows the timing for fixing the clock output level. In this example, GSM is set to 1, CKE1 is cleared to 0, and the CKE0 bit is controlled.

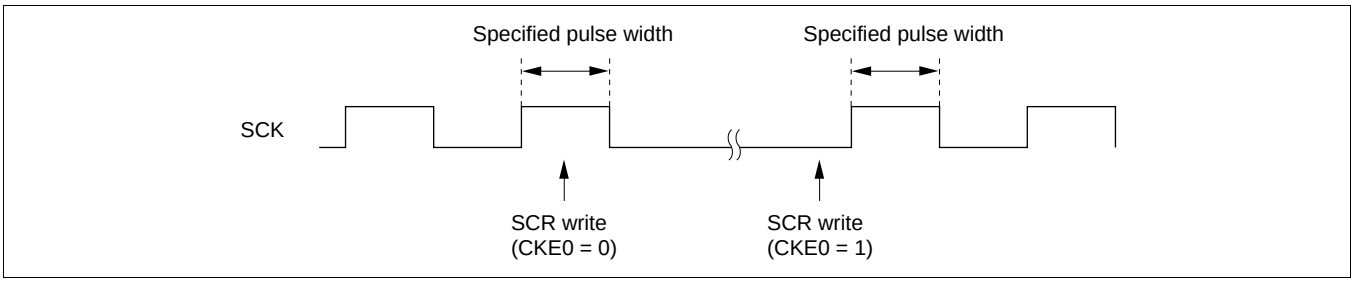

Figure 15-8 Timing for Fixing Clock Output Level

Interrupt Operation: There are three interrupt sources in Smart Card interface mode: transmit data empty interrupt (TXI) requests, transfer error interrupt (ERI) requests, and receive data full interrupt (RXI) requests. The transmit end interrupt (TEI) request is not used in this mode.

When the TEND flag in SSR is set to 1, a TXI interrupt request is generated.

When the RDRF flag in SSR is set to 1, an RXI interrupt request is generated.

When any of flags ORER, PER, and ERS in SSR is set to 1, an ERI interrupt request is generated. The relationship between the operating states and interrupt sources is shown in table 15-8.

Table 15-8 Smart Card Mode Operating States and Interrupt Sources

Operating State		Flag	Enable Bit	Interrupt Source	DMAC Activation	DTC Activation
Transmit Mode	Normal operation	TEND	TIE	TXI	Possible	Possible
	Error	ERS	RIE	ERI	Not possible	Not possible
Receive Mode	Normal operation	RDRF	RIE	RXI	Possible	Possible
	Error	PER, ORER	RIE	ERI	Not possible	Not possible

Data Transfer Operation by DMAC or DTC: In Smart Card mode, as with the normal SCI, transfer can be carried out using the DMAC or DTC. In a transmit operation, the TDRE flag is also set to 1 at the same time as the TEND flag in SSR, and a TXI interrupt is generated. If the TXI request is designated beforehand as a DMAC or DTC activation source, the DMAC or DTC will be activated by the TXI request, and transfer of the transmit data will be carried out. The TDRE

and TEND flags are automatically cleared to 0 when data transfer is performed by the DMAC or DTC. In the event of an error, the SCI retransmits the same data automatically. The TEND flag remains cleared to 0 during this time, and the DMAC is not activated. Thus, the number of bytes specified by the SCI and DMAC are transmitted automatically even in retransmission following an error. However, the ERS flag is not cleared automatically when an error occurs, and so the RIE bit should be set to 1 beforehand so that an ERI request will be generated in the event of an error, and the ERS flag will be cleared.

When performing transfer using the DMAC or DTC, it is essential to set and enable the DMAC or DTC before carrying out SCI setting. For details of the DMAC and DTC setting procedures, see section 7, DMA Controller, and section 8, Data Transfer Controller.

In a receive operation, an RXI interrupt request is generated when the RDRF flag in SSR is set to 1. If the RXI request is designated beforehand as a DMAC or DTC activation source, the DMAC or DTC will be activated by the RXI request, and transfer of the receive data will be carried out. The RDRF flag is cleared to 0 automatically when data transfer is performed by the DMAC or DTC. If an error occurs, an error flag is set but the RDRF flag is not. Consequently, the DMAC or DTC is not activated, but instead, an ERI interrupt request is sent to the CPU. Therefore, the error flag should be cleared.

15.3.7 Operation in GSM Mode

Switching the Mode: When switching between Smart Card interface mode and software standby mode, the following switching procedure should be followed in order to maintain the clock duty.

- When changing from Smart Card interface mode to software standby mode

[1] Set the data register (DR) and data direction register (DDR) corresponding to the SCK pin to the value for the fixed output state in software standby mode.

[2] Write 0 to the TE bit and RE bit in the serial control register (SCR) to halt transmit/receive operation. At the same time, set the CKE1 bit to the value for the fixed output state in software standby mode.

[3] Write 0 to the CKE0 bit in SCR to halt the clock.

[4] Wait for one serial clock period.
During this interval, clock output is fixed at the specified level, with the duty preserved.

[5] Write H'00 to SMR and SCMR.

[6] Make the transition to the software standby state.

- When returning to Smart Card interface mode from software standby mode

[7] Exit the software standby state.

[8] Set the CKE1 bit in SCR to the value for the fixed output state (current SCK pin state) when software standby mode is initiated.

[9] Set Smart Card interface mode and output the clock. Signal generation is started with the normal duty.

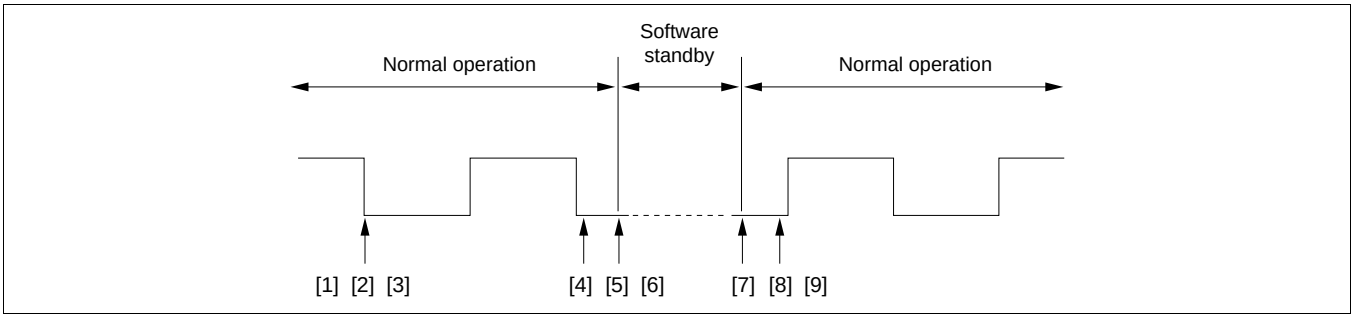

Figure 15-9 Clock Halt and Restart Procedure

Powering On: To secure the clock duty from power-on, the following switching procedure should be followed.

[1] The initial state is port input and high impedance. Use a pull-up resistor or pull-down resistor to fix the potential.

[2] Fix the SCK pin to the specified output level with the CKE1 bit in SCR.

[3] Set SMR and SCMR, and switch to Smart Card mode operation.

[4] Set the CKE0 bit in SCR to 1 to start clock output.

15.4 Usage Notes

The following points should be noted when using the SCI as a Smart Card interface.

Receive Data Sampling Timing and Reception Margin in Smart Card Interface Mode: In Smart Card Interface mode, the SCI operates on a basic clock with a frequency of 372 times the transfer rate.

In reception, the SCI samples the falling edge of the start bit using the basic clock, and performs internal synchronization. Receive data is latched internally at the rising edge of the 186th pulse of the basic clock. This is illustrated in figure 15-10.

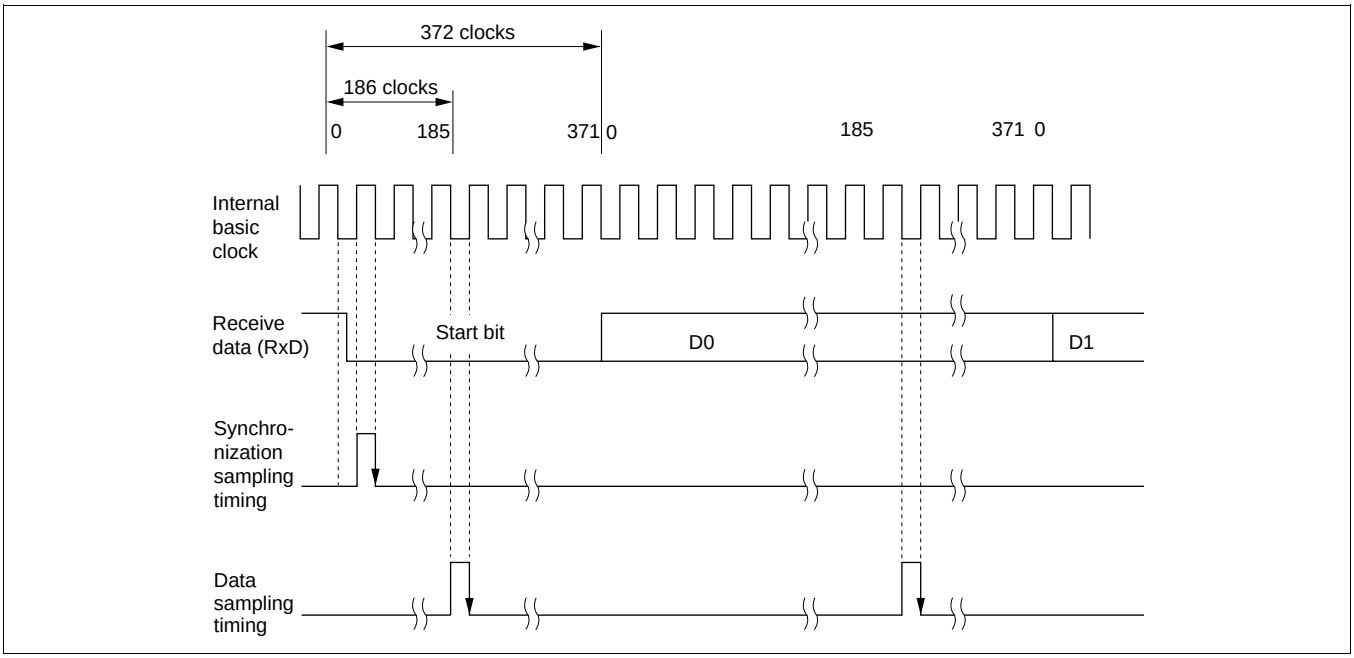

Figure 15-10 Receive Data Sampling Timing in Smart Card Mode

Thus the reception margin in asynchronous mode is given by the following formula.

$$M = \left| (0.5 - \frac{1}{2N}) - (L - 0.5)\,F - \frac{|D - 0.5|}{N}(1 + F) \right| \times 100\%$$

Where M: Reception margin (%)
N: Ratio of bit rate to clock (N = 372)
D: Clock duty (D = 0 to 1.0)
L: Frame length (L = 10)
F: Absolute value of clock frequency deviation

Assuming values of F = 0 and D = 0.5 in the above formula, the reception margin formula is as follows.

When D = 0.5 and F = 0,
M = $(0.5 - 1/2 \times 372) \times 100\%$
= 49.866%

Retransfer Operations: Retransfer operations are performed by the SCI in receive mode and transmit mode as described below.

- Retransfer operation when SCI is in receive mode

  Figure 15-11 illustrates the retransfer operation when the SCI is in receive mode.

[1] If an error is found when the received parity bit is checked, the PER bit in SSR is automatically set to 1. If the RIE bit in SCR is enabled at this time, an ERI interrupt request is generated. The PER bit in SSR should be kept cleared to 0 until the next parity bit is sampled.

[2] The RDRF bit in SSR is not set for a frame in which an error has occurred.

[3] If no error is found when the received parity bit is checked, the PER bit in SSR is not set to 1.

[4] If no error is found when the received parity bit is checked, the receive operation is judged to have been completed normally, and the RDRF flag in SSR is automatically set to 1. If the RIE bit in SCR is enabled at this time, an RXI interrupt request is generated.

If DMAC or DTC data transfer by an RXI source is enabled, the contents of RDR can be read automatically. When the RDR data is read by the DMAC or DTC, the RDRF flag is automatically cleared to 0.

[5] When a normal frame is received, the pin retains the high-impedance state at the timing for error signal transmission.

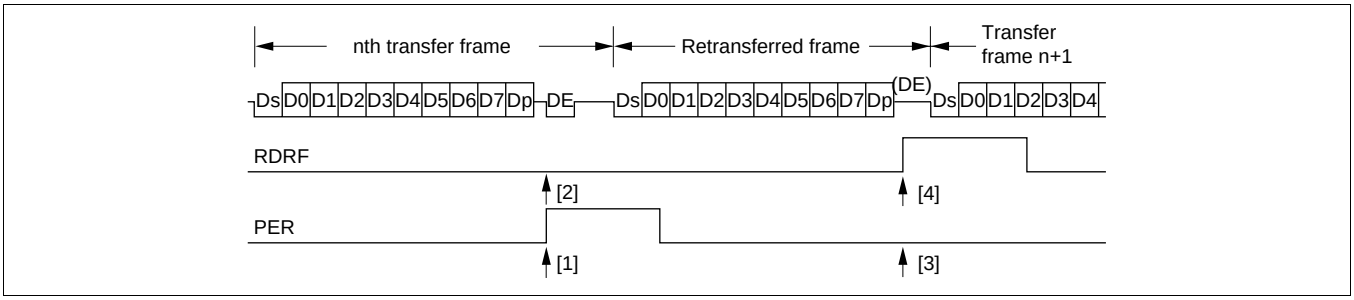

Figure 15-11 Retransfer Operation in SCI Receive Mode

- Retransfer operation when SCI is in transmit mode

  Figure 15-12 illustrates the retransfer operation when the SCI is in transmit mode.

[6] If an error signal is sent back from the receiving end after transmission of one frame is completed, the ERS bit in SSR is set to 1. If the RIE bit in SCR is enabled at this time, an ERI interrupt request is generated. The ERS bit in SSR should be kept cleared to 0 until the next parity bit is sampled.

[7] The TEND bit in SSR is not set for a frame for which an error signal indicating an abnormality is received.

[8] If an error signal is not sent back from the receiving end, the ERS bit in SSR is not set.

[9] If an error signal is not sent back from the receiving end, transmission of one frame, including a retransfer, is judged to have been completed, and the TEND bit in SSR is set to 1. If the TIE bit in SCR is enabled at this time, a TXI interrupt request is generated.

If data transfer by the DMAC or DTC by means of the TXI source is enabled, the next data can be written to TDR automatically. When data is written to TDR by the DMAC or DTC, the TDRE bit is automatically cleared to 0.

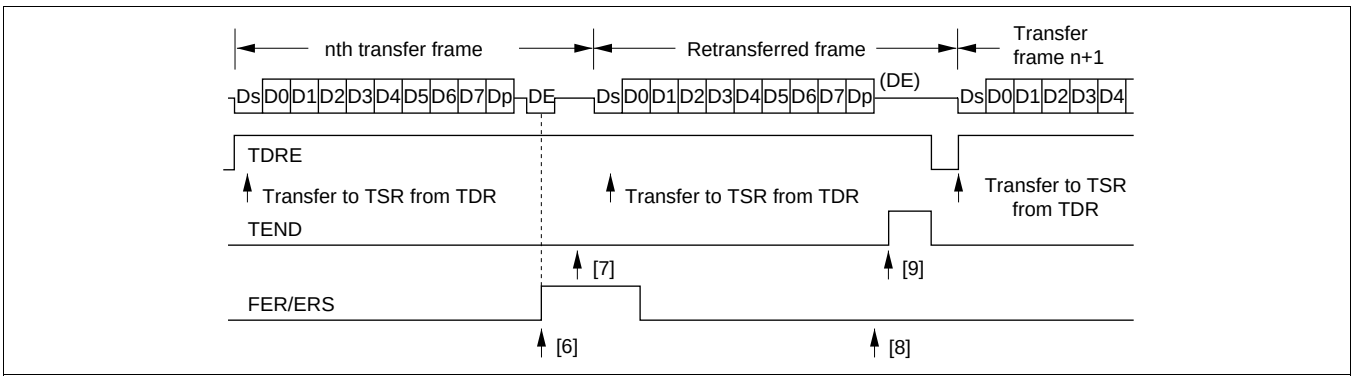

Figure 15-12 Retransfer Operation in SCI Transmit Mode

Section 16 A/D Converter

16.1 Overview

The H8S/2357 Group incorporates a successive approximation type 10-bit A/D converter that allows up to eight analog input channels to be selected.

16.1.1 Features

A/D converter features are listed below

- 10-bit resolution
- Eight input channels
- Settable analog conversion voltage range
  — Conversion of analog voltages with the reference voltage pin (V_{ref}) as the analog reference voltage
- High-speed conversion
  — Minimum conversion time: 6.7 μs per channel (at 20 MHz operation)
- Choice of single mode or scan mode
  — Single mode: Single-channel A/D conversion
  — Scan mode: Continuous A/D conversion on 1 to 4 channels
- Four data registers
  — Conversion results are held in a 16-bit data register for each channel
- Sample and hold function
- Three kinds of conversion start
  — Choice of software or timer conversion start trigger (TPU or 8-bit timer), or $\overline{\text{ADTRG}}$ pin
- A/D conversion end interrupt generation
  — A/D conversion end interrupt (ADI) request can be generated at the end of A/D conversion
- Module stop mode can be set
  — As the initial setting, A/D converter operation is halted. Register access is enabled by exiting module stop mode.

16.1.2 Block Diagram

Figure 16-1 shows a block diagram of the A/D converter.

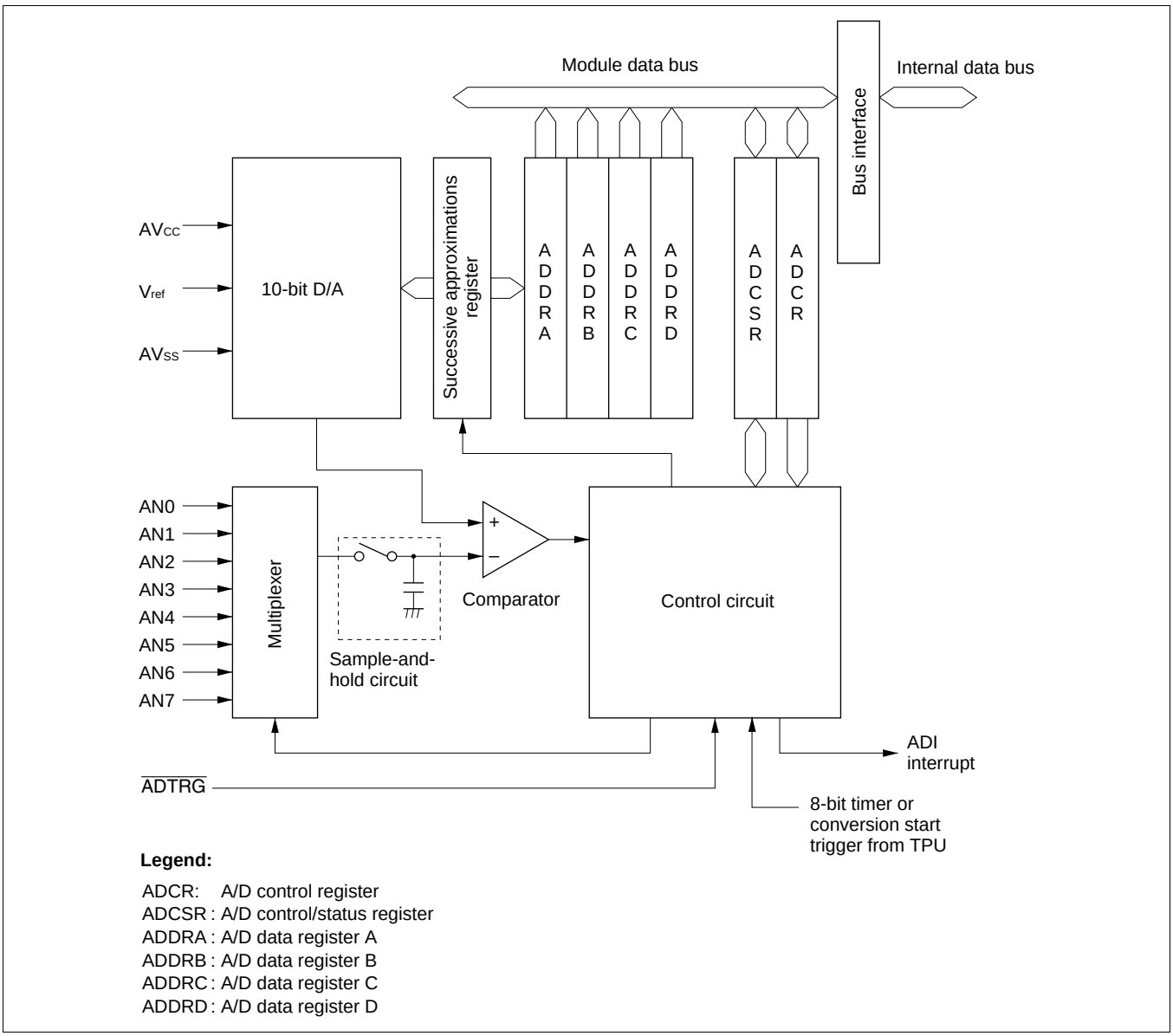

Figure 16-1 Block Diagram of A/D Converter

16.1.3 Pin Configuration

Table 16-1 summarizes the input pins used by the A/D converter.

The AV_{CC} and AV_{SS} pins are the power supply pins for the analog block in the A/D converter. The V_{ref} pin is the A/D conversion reference voltage pin.

The eight analog input pins are divided into two groups: group 0 (AN0 to AN3), and group 1 (AN4 to AN7).

Table 16-1 A/D Converter Pins

Pin Name	Symbol	I/O	Function
Analog power supply pin	AV_{CC}	Input	Analog block power supply
Analog ground pin	AV_{SS}	Input	Analog block ground and A/D conversion reference voltage
Reference voltage pin	V_{ref}	Input	A/D conversion reference voltage
Analog input pin 0	AN0	Input	Group 0 analog inputs
Analog input pin 1	AN1	Input	
Analog input pin 2	AN2	Input	
Analog input pin 3	AN3	Input	
Analog input pin 4	AN4	Input	Group 1 analog inputs
Analog input pin 5	AN5	Input	
Analog input pin 6	AN6	Input	
Analog input pin 7	AN7	Input	
A/D external trigger input pin	$\overline{ADTRG}$	Input	External trigger input for starting A/D conversion

16.1.4 Register Configuration

Table 16-2 summarizes the registers of the A/D converter.

Table 16-2 A/D Converter Registers

Name	Abbreviation	R/W	Initial Value	Address*[1]
A/D data register AH	ADDRAH	R	H'00	H'FF90
A/D data register AL	ADDRAL	R	H'00	H'FF91
A/D data register BH	ADDRBH	R	H'00	H'FF92
A/D data register BL	ADDRBL	R	H'00	H'FF93
A/D data register CH	ADDRCH	R	H'00	H'FF94
A/D data register CL	ADDRCL	R	H'00	H'FF95
A/D data register DH	ADDRDH	R	H'00	H'FF96
A/D data register DL	ADDRDL	R	H'00	H'FF97
A/D control/status register	ADCSR	R/(W)*[2]	H'00	H'FF98
A/D control register	ADCR	R/W	H'3F	H'FF99
Module stop control register	MSTPCR	R/W	H'3FFF	H'FF3C

Notes: 1. Lower 16 bits of the address.
2. Bit 7 can only be written with 0 for flag clearing.

16.2 Register Descriptions

16.2.1 A/D Data Registers A to D (ADDRA to ADDRD)

Bit	:	15	14	13	12	11	10	9	8	7	6	5	4	3	2	1	0
		AD9	AD8	AD7	AD6	AD5	AD4	AD3	AD2	AD1	AD0	—	—	—	—	—	—
Initial value	:	0	0	0	0	0	0	0	0	0	0	0	0	0	0	0	0
R/W	:	R	R	R	R	R	R	R	R	R	R	R	R	R	R	R	R

There are four 16-bit read-only ADDR registers, ADDRA to ADDRD, used to store the results of A/D conversion.

The 10-bit data resulting from A/D conversion is transferred to the ADDR register for the selected channel and stored there. The upper 8 bits of the converted data are transferred to the upper byte (bits 15 to 8) of ADDR, and the lower 2 bits are transferred to the lower byte (bits 7 and 6) and stored. Bits 5 to 0 are always read as 0.

The correspondence between the analog input channels and ADDR registers is shown in table 16-3.

ADDR can always be read by the CPU. The upper byte can be read directly, but for the lower byte, data transfer is performed via a temporary register (TEMP). For details, see section 16.3, Interface to Bus Master.

The ADDR registers are initialized to H'0000 by a reset, and in standby mode or module stop mode.

Table 16-3 Analog Input Channels and Corresponding ADDR Registers

Analog Input Channel		
Group 0	**Group 1**	**A/D Data Register**
AN0	AN4	ADDRA
AN1	AN5	ADDRB
AN2	AN6	ADDRC
AN3	AN7	ADDRD

16.2.2 A/D Control/Status Register (ADCSR)

Bit	:	7	6	5	4	3	2	1	0
		ADF	ADIE	ADST	SCAN	CKS	CH2	CH1	CH0
Initial value	:	0	0	0	0	0	0	0	0
R/W	:	R/(W)*	R/W	R/W	R/W	R/W	R/W	R/W	R/W

Note: * Only 0 can be written to bit 7, to clear this flag.

ADCSR is an 8-bit readable/writable register that controls A/D conversion operations and shows the status of the operation.

ADCSR is initialized to H'00 by a reset, and in hardware standby mode or module stop mode.

Bit 7—A/D End Flag (ADF): Status flag that indicates the end of A/D conversion.

Bit 7 ADF	Description	
0	[Clearing conditions] • When 0 is written to the ADF flag after reading ADF = 1 • When the DTC is activated by an ADI interrupt and ADDR is read	(Initial value)
1	[Setting conditions] • Single mode: When A/D conversion ends • Scan mode: When A/D conversion ends on all specified channels	

Bit 6—A/D Interrupt Enable (ADIE): Selects enabling or disabling of interrupt (ADI) requests at the end of A/D conversion.

Bit 6 ADIE	Description	
0	A/D conversion end interrupt (ADI) request disabled	(Initial value)
1	A/D conversion end interrupt (ADI) request enabled	

Bit 5—A/D Start (ADST): Selects starting or stopping on A/D conversion. Holds a value of 1 during A/D conversion.

The ADST bit can be set to 1 by software, a timer conversion start trigger, or the A/D external trigger input pin ($\overline{\text{ADTRG}}$).

Bit 5 ADST	Description	
0	• A/D conversion stopped	(Initial value)
1	• Single mode: A/D conversion is started. Cleared to 0 automatically when conversion on the specified channel ends. • Scan mode: A/D conversion is started. Conversion continues sequentially on the selected channels until ADST is cleared to 0 by software, a reset, or a transition to standby mode or module stop mode.	

Bit 4—Scan Mode (SCAN): Selects single mode or scan mode as the A/D conversion operating mode. See section 16.4, Operation, for single mode and scan mode operation. Only set the SCAN bit while conversion is stopped (ADST = 0).

Bit 4 SCAN	Description	
0	Single mode	(Initial value)
1	Scan mode	

Bit 3—Clock Select (CKS): Sets the A/D conversion time. Only change the conversion time while conversion is stopped (ADST = 0).

Bit 3 CKS	Description	
0	Conversion time = 266 states (max.)	(Initial value)
1	Conversion time = 134 states (max.)	

Bits 2 to 0—Channel Select 2 to 0 (CH2 to CH0): Together with the SCAN bit, these bits select the analog input channels.

Only set the input channel while conversion is stopped (ADST = 0).

Group Selection	Channel Selection		Description	
CH2	**CH1**	**CH0**	**Single Mode (SCAN=0)**	**Scan Mode (SCAN=1)**
0	0	0	AN0 (Initial value)	AN0
		1	AN1	AN0, AN1
	1	0	AN2	AN0 to AN2
		1	AN3	AN0 to AN3
1	0	0	AN4	AN4
		1	AN5	AN4, AN5
	1	0	AN6	AN4 to AN6
		1	AN7	AN4 to AN7

16.2.3 A/D Control Register (ADCR)

Bit :	7	6	5	4	3	2	1	0
	TRGS1	TRGS0	—	—	—	—	—	—
Initial value :	0	0	1	1	1	1	1	1
R/W :	R/W	R/W	—	—	—/(R/W)*	—/(R/W)*	—	—

Note: * Applies to the H8S/2398, H8S/2394, H8S/2392, and H8S/2390.

ADCR is an 8-bit readable/writable register that enables or disables external triggering of A/D conversion operations.

ADCR is initialized to H'3F by a reset, and in standby mode or module stop mode.

Bits 7 and 6—Timer Trigger Select 1 and 0 (TRGS1, TRGS0): Select enabling or disabling of the start of A/D conversion by a trigger signal. Only set bits TRGS1 and TRGS0 while conversion is stopped (ADST = 0).

Bit 7 TRGS1	Bit 6 TRGS0	Description
0	0	A/D conversion start by external trigger is disabled (Initial value)
	1	A/D conversion start by external trigger (TPU) is enabled
1	0	A/D conversion start by external trigger (8-bit timer) is enabled
	1	A/D conversion start by external trigger pin ($\overline{\text{ADTRG}}$) is enabled

(1) For H8S/2357 and H8S/2352

Bits 5 to 0—Reserved: They are always read as 1 and cannot be modified.

(2) For H8S/2398, H8S/2394, H8S/2392, and H8S/2390

Bits 5, 4, 1, and 0—Reserved: They are always read as 1 and cannot be modified.

Bits 3 and 2—Reserved: Should always be written with 1.

16.2.4 Module Stop Control Register (MSTPCR)

	MSTPCRH								MSTPCRL							
Bit :	15	14	13	12	11	10	9	8	7	6	5	4	3	2	1	0
Initial value :	0	0	1	1	1	1	1	1	1	1	1	1	1	1	1	1
R/W :	R/W	R/W	R/W	R/W	R/W	R/W	R/W	R/W	R/W	R/W	R/W	R/W	R/W	R/W	R/W	R/W

MSTPCR is a 16-bit readable/writable register that performs module stop mode control.

When the MSTP9 bit in MSTPCR is set to 1, A/D converter operation stops at the end of the bus cycle and a transition is made to module stop mode. Registers cannot be read or written to in module stop mode. For details, see section 21.5, Module Stop Mode.

MSTPCR is initialized to H'3FFF by a reset and in hardware standby mode. It is not initialized in software standby mode.

Bit 9—Module Stop (MSTP9): Specifies the A/D converter module stop mode.

Bit 9 MSTP9	Description	
0	A/D converter module stop mode cleared	
1	A/D converter module stop mode set	(Initial value)

16.3 Interface to Bus Master

ADDRA to ADDRD are 16-bit registers, and the data bus to the bus master is 8 bits wide. Therefore, in accesses by the bus master, the upper byte is accessed directly, but the lower byte is accessed via a temporary register (TEMP).

A data read from ADDR is performed as follows. When the upper byte is read, the upper byte value is transferred to the CPU and the lower byte value is transferred to TEMP. Next, when the lower byte is read, the TEMP contents are transferred to the CPU.

When reading ADDR. always read the upper byte before the lower byte. It is possible to read only the upper byte, but if only the lower byte is read, incorrect data may be obtained.

Figure 16-2 shows the data flow for ADDR access.

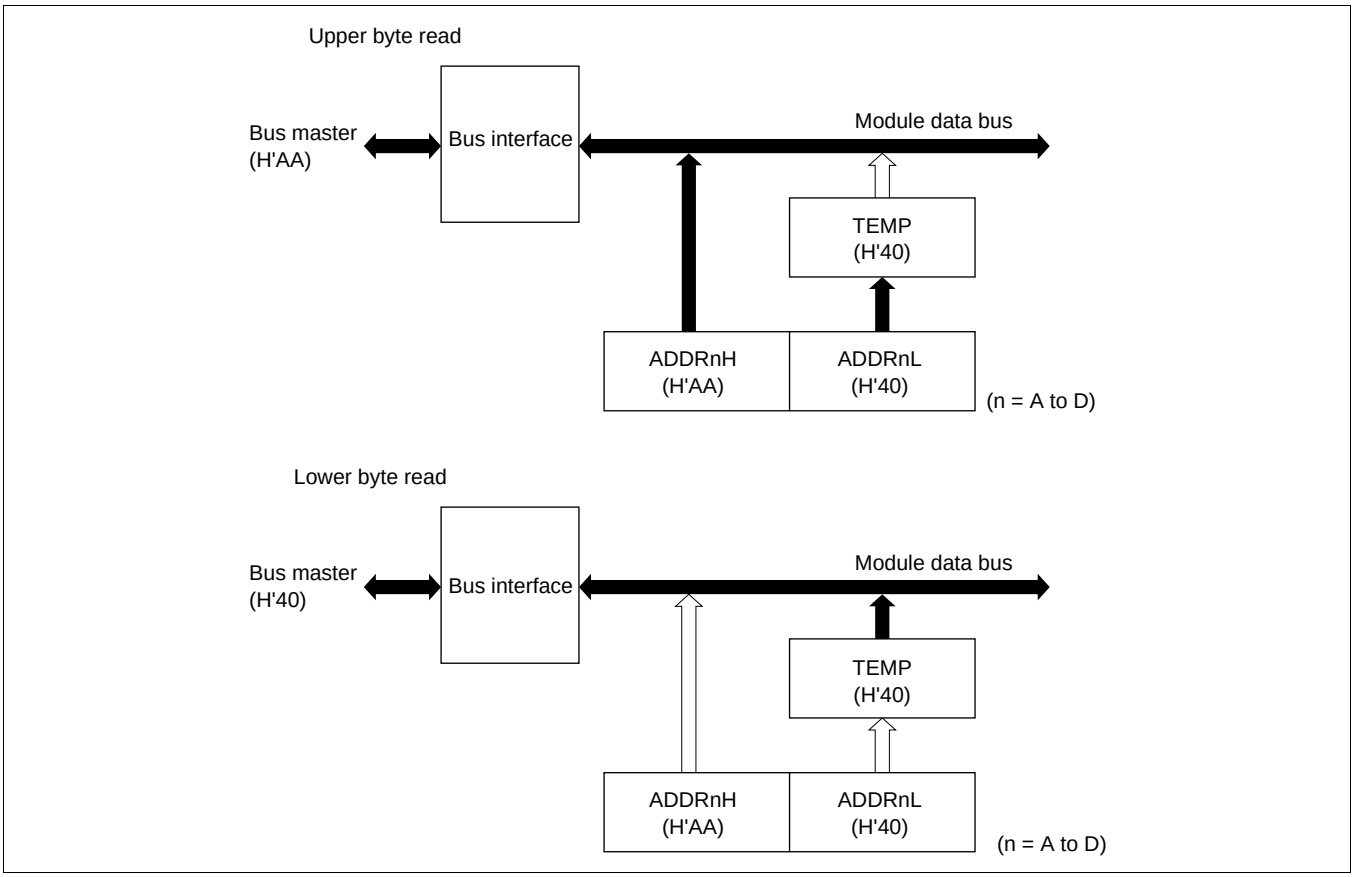

Figure 16-2 ADDR Access Operation (Reading H'AA40)

16.4 Operation

The A/D converter operates by successive approximation with 10-bit resolution. It has two operating modes: single mode and scan mode.

16.4.1 Single Mode (SCAN = 0)

Single mode is selected when A/D conversion is to be performed on a single channel only. A/D conversion is started when the ADST bit is set to 1, according to the software or external trigger input. The ADST bit remains set to 1 during A/D conversion, and is automatically cleared to 0 when conversion ends.

On completion of conversion, the ADF flag is set to 1. If the ADIE bit is set to 1 at this time, an ADI interrupt request is generated. The ADF flag is cleared by writing 0 after reading ADCSR.

When the operating mode or analog input channel must be changed during analog conversion, to prevent incorrect operation, first clear the ADST bit to 0 in ADCSR to halt A/D conversion. After making the necessary changes, set the ADST bit to 1 to start A/D conversion again. The ADST bit can be set at the same time as the operating mode or input channel is changed.

Typical operations when channel 1 (AN1) is selected in single mode are described next. Figure 16-3 shows a timing diagram for this example.

[1] Single mode is selected (SCAN = 0), input channel AN1 is selected (CH2 = 0, CH1 = 0, CH0 = 1), the A/D interrupt is enabled (ADIE = 1), and A/D conversion is started (ADST = 1).

[2] When A/D conversion is completed, the result is transferred to ADDRB. At the same time the ADF flag is set to 1, the ADST bit is cleared to 0, and the A/D converter becomes idle.

[3] Since ADF = 1 and ADIE = 1, an ADI interrupt is requested.

[4] The A/D interrupt handling routine starts.

[5] The routine reads ADCSR, then writes 0 to the ADF flag.

[6] The routine reads and processes the connection result (ADDRB).

[7] Execution of the A/D interrupt handling routine ends. After that, if the ADST bit is set to 1, A/D conversion starts again and steps [2] to [7] are repeated.

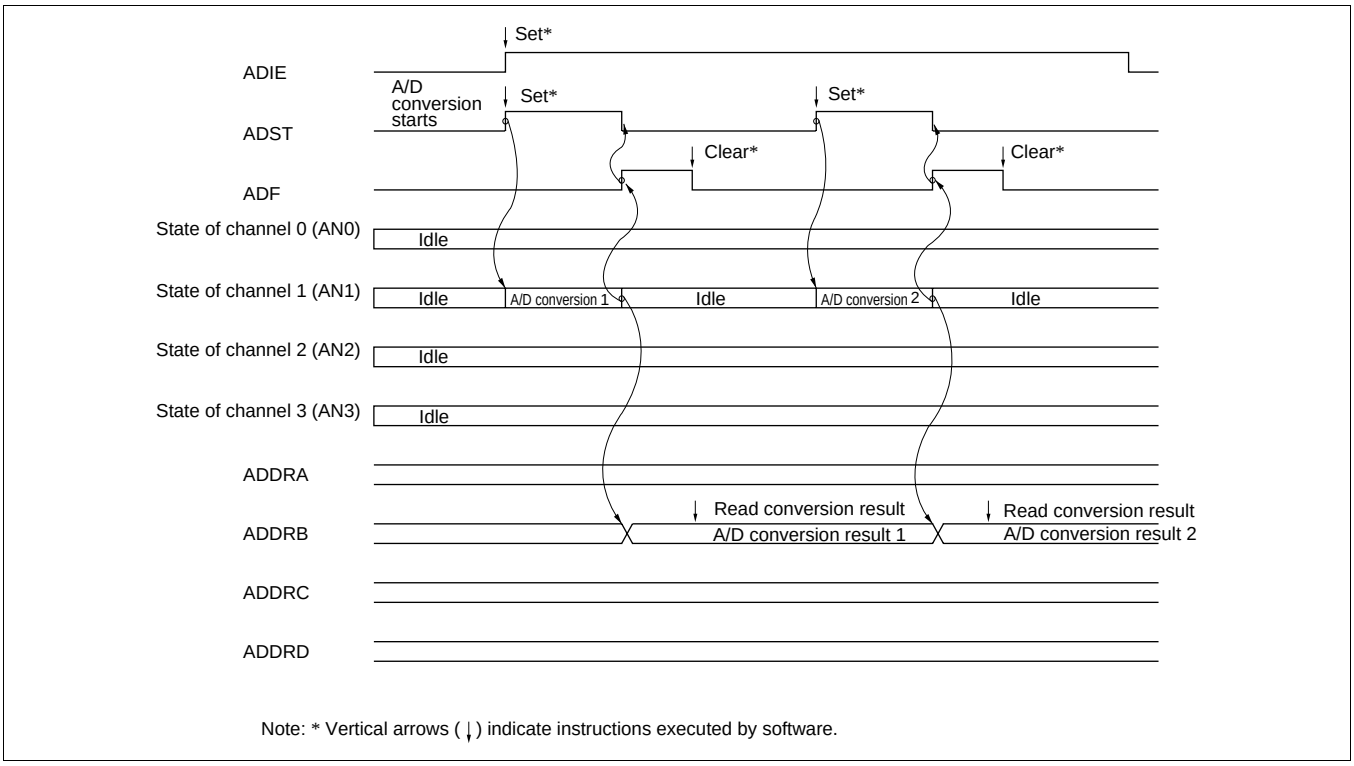

Figure 16-3 Example of A/D Converter Operation (Single Mode, Channel 1 Selected)

16.4.2 Scan Mode (SCAN = 1)

Scan mode is useful for monitoring analog inputs in a group of one or more channels. When the ADST bit is set to 1 by a software, timer or external trigger input, A/D conversion starts on the first channel in the group (AN0). When two or more channels are selected, after conversion of the first channel ends, conversion of the second channel (AN1) starts immediately. A/D conversion continues cyclically on the selected channels until the ADST bit is cleared to 0. The conversion results are transferred for storage into the ADDR registers corresponding to the channels.

When the operating mode or analog input channel must be changed during analog conversion, to prevent incorrect operation, first clear the ADST bit to 0 in ADCSR to halt A/D conversion. After making the necessary changes, set the ADST bit to 1 to start A/D conversion again. The ADST bit can be set at the same time as the operating mode or input channel is changed.

Typical operations when three channels (AN0 to AN2) are selected in scan mode are described next. Figure 16-4 shows a timing diagram for this example.

[1] Scan mode is selected (SCAN = 1), scan group 0 is selected (CH2 = 0), analog input channels AN0 to AN2 are selected (CH1 = 1, CH0 = 0), and A/D conversion is started (ADST = 1)

[2] When A/D conversion of the first channel (AN0) is completed, the result is transferred to ADDRA. Next, conversion of the second channel (AN1) starts automatically.

[3] Conversion proceeds in the same way through the third channel (AN2).

[4] When conversion of all the selected channels (AN0 to AN2) is completed, the ADF flag is set to 1 and conversion of the first channel (AN0) starts again. If the ADIE bit is set to 1 at this time, an ADI interrupt is requested after A/D conversion ends.

[5] Steps [2] to [4] are repeated as long as the ADST bit remains set to 1. When the ADST bit is cleared to 0, A/D conversion stops. After that, if the ADST bit is set to 1, A/D conversion starts again from the first channel (AN0).

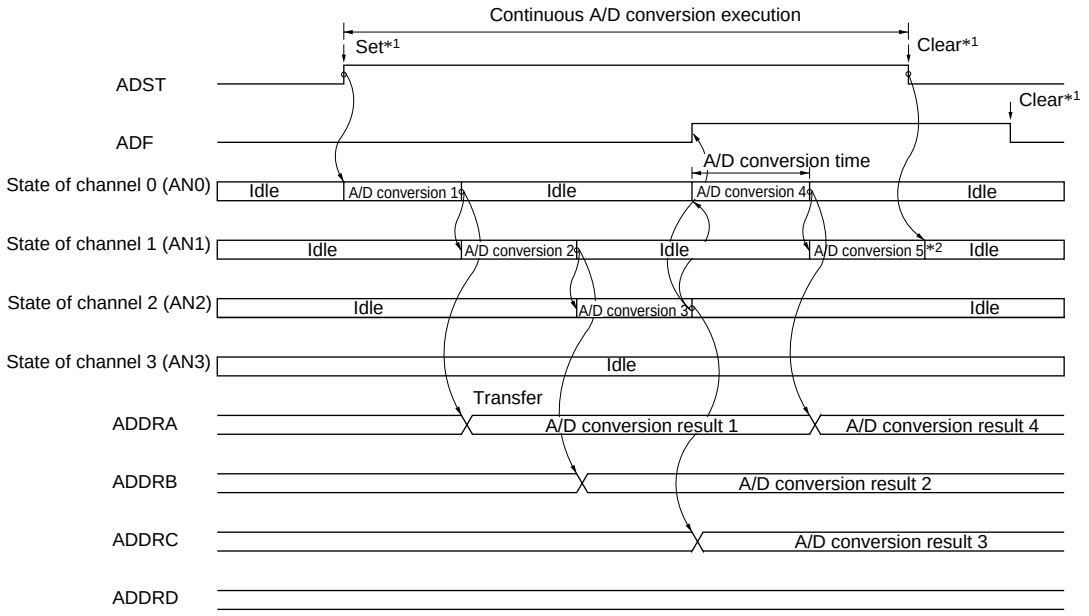

Notes: 1. Vertical arrows (↓) indicate instructions executed by software.
2. Data currently being converted is ignored.

Figure 16-4 Example of A/D Converter Operation (Scan Mode, Channels AN0 to AN2 Selected)

16.4.3 Input Sampling and A/D Conversion Time

The A/D converter has a on-chip sample-and-hold circuit. The A/D converter samples the analog input at a time t_D after the ADST bit is set to 1, then starts conversion. Figure 16-5 shows the A/D conversion timing. Table 16-4 indicates the A/D conversion time.

As indicated in figure 16-5, the A/D conversion time includes t_D and the input sampling time. The length of t_D varies depending on the timing of the write access to ADCSR. The total conversion time therefore varies within the ranges indicated in table 16-4.

In scan mode, the values given in table 16-4 apply to the first conversion time. In the second and subsequent conversions the conversion time is fixed at 256 states when CKS = 0 or 128 states when CKS = 1.

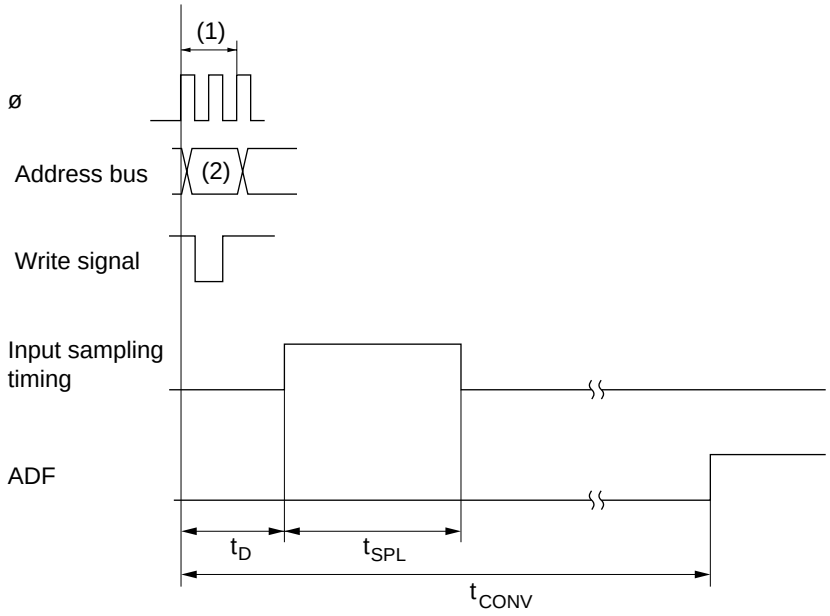

Legend:
(1): ADCSR write cycle
(2): ADCSR address
t_D: A/D conversion start delay
t_{SPL}: Input sampling time
t_{CONV}: A/D conversion time

Figure 16-5 A/D Conversion Timing

Table 16-4 A/D Conversion Time (Single Mode)

		CKS = 0			CKS = 1		
Item	**Symbol**	**Min**	**Typ**	**Max**	**Min**	**Typ**	**Max**
A/D conversion start delay	t_D	10	—	17	6	—	9
Input sampling time	t_{SPL}	—	63	—	—	31	—
A/D conversion time	t_{CONV}	259	—	266	131	—	134

Note: Values in the table are the number of states.

16.4.4 External Trigger Input Timing

A/D conversion can be externally triggered. When the TRGS1 and TRGS0 bits are set to 11 in ADCR, external trigger input is enabled at the $\overline{\text{ADTRG}}$ pin. A falling edge at the $\overline{\text{ADTRG}}$ pin sets the ADST bit to 1 in ADCSR, starting A/D conversion. Other operations, in both single and scan modes, are the same as if the ADST bit has been set to 1 by software. Figure 16-6 shows the timing.

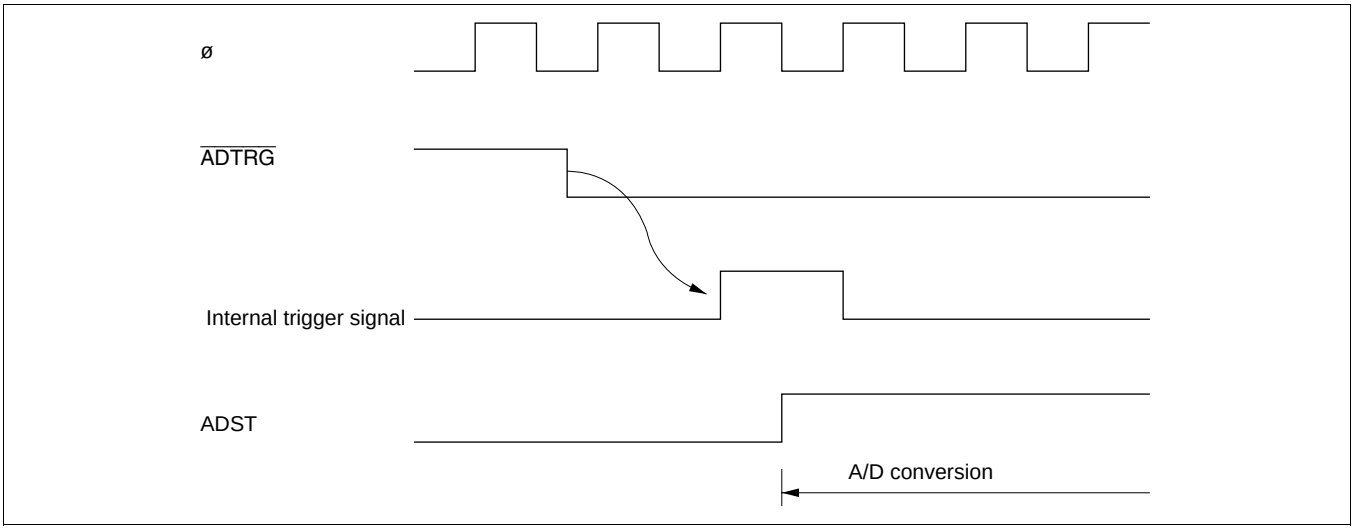

Figure 16-6 External Trigger Input Timing

16.5 Interrupts

The A/D converter generates an A/D conversion end interrupt (ADI) at the end of A/D conversion. ADI interrupt requests can be enabled or disabled by means of the ADIE bit in ADCSR.

The DTC or DMAC can be activated by an ADI interrupt. Having the converted data read by the DTC or DMAC in response to an ADI interrupt enables continuous conversion to be achieved without imposing a load on software.

The A/D converter interrupt source is shown in table 16-5.

Table 16-5 A/D Converter Interrupt Source

Interrupt Source	Description	DTC or DMAC Activation
ADI	Interrupt due to end of conversion	Possible

16.6 Usage Notes

The following points should be noted when using the A/D converter.

Setting Range of Analog Power Supply and Other Pins:

(1) Analog input voltage range

The voltage applied to analog input pins AN0 to AN7 during A/D conversion should be in the range $AV_{SS} \leq ANn \leq V_{ref}$.

(2) Relation between AV_{CC}, AV_{SS} and V_{CC}, V_{SS}

As the relationship between AV_{CC}, AV_{SS} and V_{CC}, V_{SS}, set $AV_{SS} = V_{SS}$. If the A/D converter is not used, the AV_{CC} and AV_{SS} pins must on no account be left open.

(3) V_{ref} input range

The analog reference voltage input at the V_{ref} pin set in the range $V_{ref} \leq AV_{CC}$.

Note:If conditions (1), (2), and (3) above are not met, the reliability of the device may be adversely affected.

Notes on Board Design: In board design, digital circuitry and analog circuitry should be as mutually isolated as possible, and layout in which digital circuit signal lines and analog circuit signal lines cross or are in close proximity should be avoided as far as possible. Failure to do so may result in incorrect operation of the analog circuitry due to inductance, adversely affecting A/D conversion values.

Also, digital circuitry must be isolated from the analog input signals (AN0 to AN7), analog reference power supply (V_{ref}), and analog power supply (AV_{CC}) by the analog ground (AV_{SS}). Also, the analog ground (AV_{SS}) should be connected at one point to a stable digital ground (V_{SS}) on the board.

Notes on Noise Countermeasures: A protection circuit connected to prevent damage due to an abnormal voltage such as an excessive surge at the analog input pins (AN0 to AN7) and analog reference power supply (V_{ref}) should be connected between AV_{CC} and AV_{SS} as shown in figure 16-7.

Also, the bypass capacitors connected to AV_{CC} and V_{ref} and the filter capacitor connected to AN0 to AN7 must be connected to AV_{SS}.

If a filter capacitor is connected as shown in figure 16-7, the input currents at the analog input pins (AN0 to AN7) are averaged, and so an error may arise. Also, when A/D conversion is performed frequently, as in scan mode, if the current charged and discharged by the capacitance of the sample-and-hold circuit in the A/D converter exceeds the current input via the input impedance (R_{in}), an error will arise in the analog input pin voltage. Careful consideration is therefore required when deciding the circuit constants.

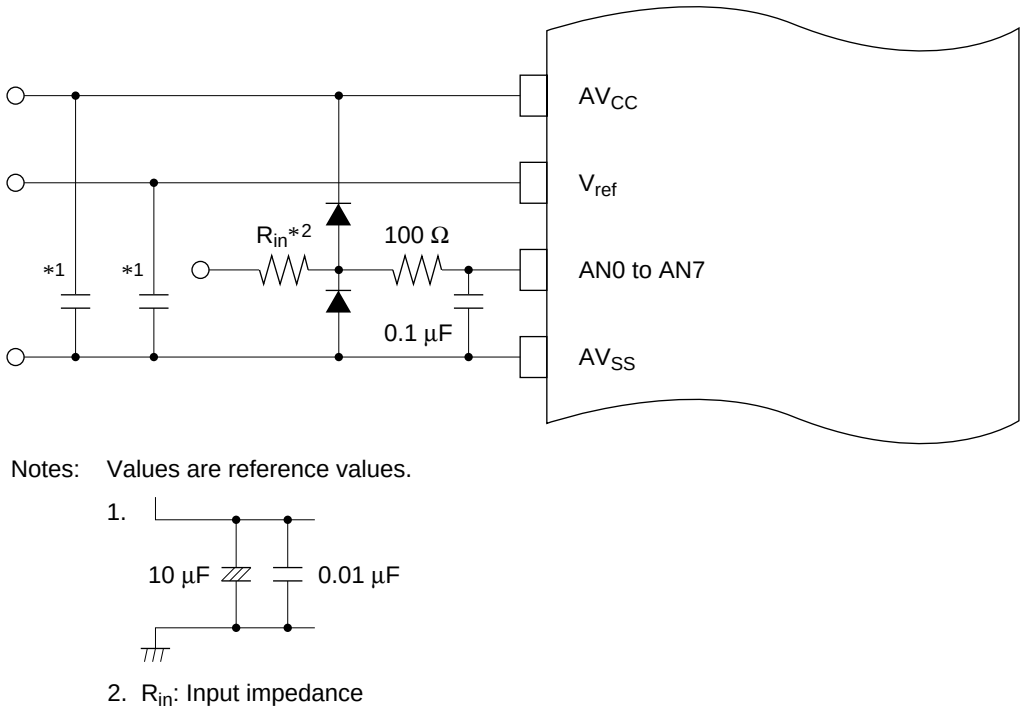

Figure 16-7 Example of Analog Input Protection Circuit

A/D Conversion Precision Definitions: H8S/2357 Group A/D conversion precision definitions are given below.

- Resolution
  The number of A/D converter digital output codes

- Offset error
  The deviation of the analog input voltage value from the ideal A/D conversion characteristic when the digital output changes from the minimum voltage value B'0000000000 (H'000) to B'0000000001 (H'001) (see figure 16-9).

- Full-scale error
  The deviation of the analog input voltage value from the ideal A/D conversion characteristic when the digital output changes from B'1111111110 (H'3FE) to B'1111111111 (H'3FF) (see figure 16-9).

- Quantization error
  The deviation inherent in the A/D converter, given by 1/2 LSB (see figure 16-8).

- Nonlinearity error
  The error with respect to the ideal A/D conversion characteristic between the zero voltage and the full-scale voltage. Does not include the offset error, full-scale error, or quantization error.

- Absolute precision
  The deviation between the digital value and the analog input value. Includes the offset error, full-scale error, quantization error, and nonlinearity error.

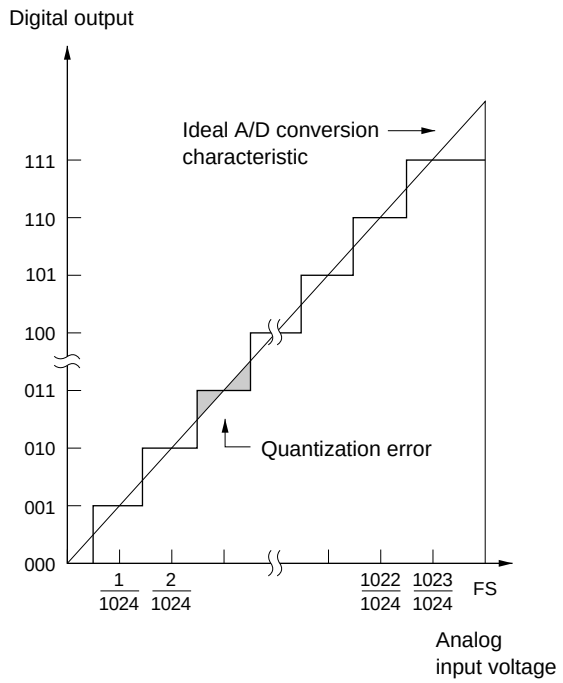

Figure 16-8 A/D Conversion Precision Definitions (1)

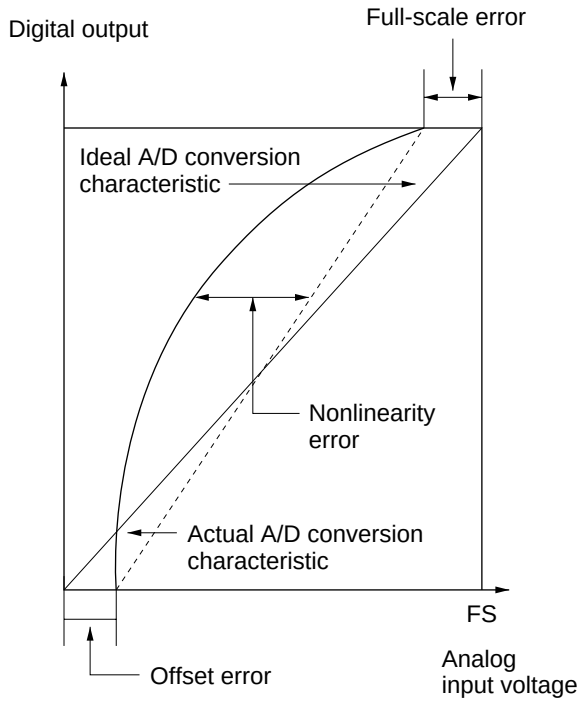

Figure 16-9 A/D Conversion Precision Definitions (2)

Permissible Signal Source Impedance: H8S/2357 Group analog input is designed so that conversion precision is guaranteed for an input signal for which the signal source impedance is 10 kohm or less. This specification is provided to enable the A/D converter's sample-and-hold circuit input capacitance to be charged within the sampling time; if the sensor output impedance exceeds 10 kohm, charging may be insufficient and it may not be possible to guarantee the A/D conversion precision.

However, if a large capacitance is provided externally, the input load will essentially comprise only the internal input resistance of 10 kohm, and the signal source impedance is ignored.

However, since a low-pass filter effect is obtained in this case, it may not be possible to follow an analog signal with a large differential coefficient (e.g., 5 mV/μs or greater).

When converting a high-speed analog signal, a low-impedance buffer should be inserted.

Influences on Absolute Precision: Adding capacitance results in coupling with GND, and therefore noise in GND may adversely affect absolute precision. Be sure to make the connection to an electrically stable GND such as AV_{SS}.

Care is also required to insure that filter circuits do not communicate with digital signals on the mounting board, so acting as antennas.

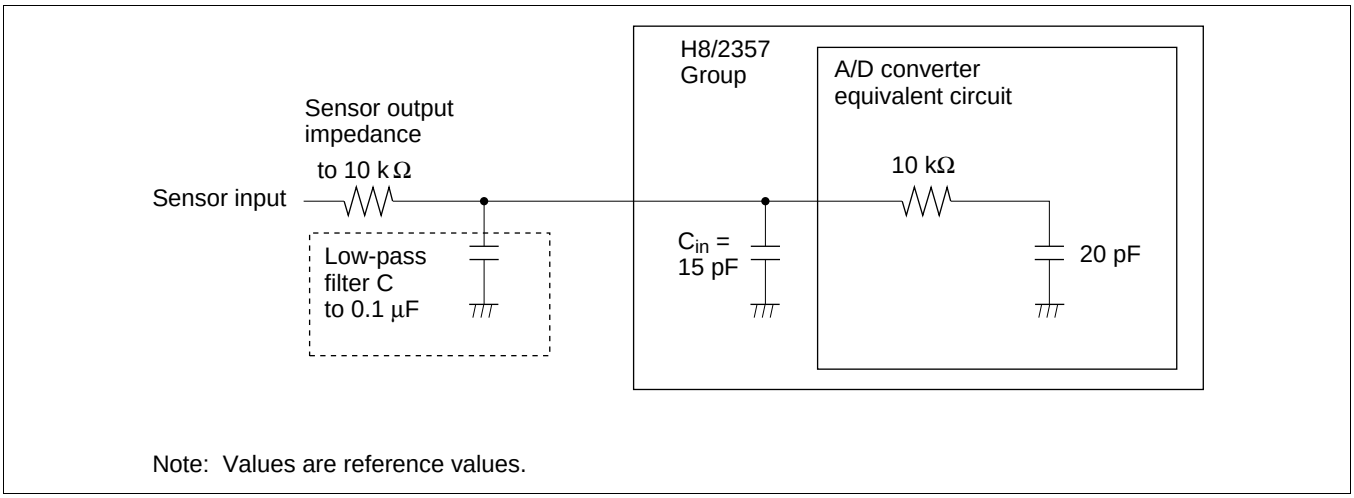

Figure 16-10 Example of Analog Input Circuit

Section 17 D/A Converter

17.1 Overview

The H8S/2357 Group includes a two-channel D/A converter.

17.1.1 Features

D/A converter features are listed below

- 8-bit resolution
- Two output channels
- Maximum conversion time of 10 μs (with 20 pF load)
- Output voltage of 0 V to V_{ref}
- D/A output hold function in software standby mode
- Module stop mode can be set
  — As the initial setting, D/A converter operation is halted. Register access is enabled by exiting module stop mode.

17.1.2 Block Diagram

Figure 17-1 shows a block diagram of the D/A converter.

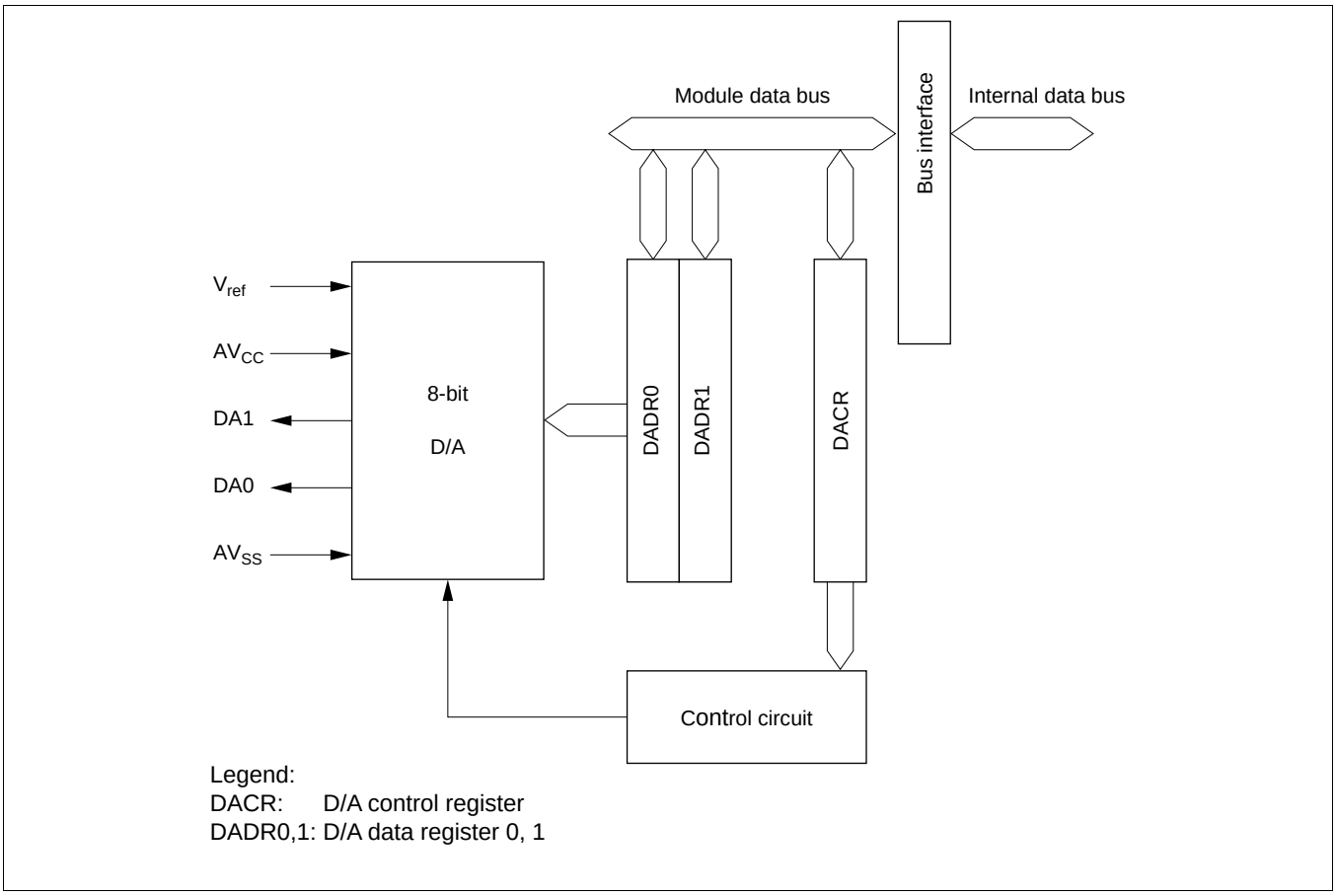

Figure 17-1 Block Diagram of D/A Converter

17.1.3 Pin Configuration

Table 17-1 summarizes the input and output pins of the D/A converter.

Table 17-1 Pin Configuration

Pin Name	Symbol	I/O	Function
Analog power pin	AV_{CC}	Input	Analog power source
Analog ground pin	AV_{SS}	Input	Analog ground and reference voltage
Analog output pin 0	DA0	Output	Channel 0 analog output
Analog output pin 1	DA1	Output	Channel 1 analog output
Reference voltage pin	V_{ref}	Input	Analog reference voltage

17.1.4 Register Configuration

Table 17-2 summarizes the registers of the D/A converter.

Table 17-2 D/A Converter Registers

Name	Abbreviation	R/W	Initial Value	Address*
D/A data register 0	DADR0	R/W	H'00	H'FFA4
D/A data register 1	DADR1	R/W	H'00	H'FFA5
D/A control register	DACR	R/W	H'1F	H'FFA6
Module stop control register	MSTPCR	R/W	H'3FFF	H'FF3C

Note:* Lower 16 bits of the address.

17.2 Register Descriptions

17.2.1 D/A Data Registers 0 and 1 (DADR0, DADR1)

Bit :	7	6	5	4	3	2	1	0
Initial value :	0	0	0	0	0	0	0	0
R/W :	R/W	R/W	R/W	R/W	R/W	R/W	R/W	R/W

DADR0 and DADR1 are 8-bit readable/writable registers that store data for conversion.

Whenever output is enabled, the values in DADR0 and DADR1 are converted and output from the analog output pins.

DADR0 and DADR1 are each initialized to H'00 by a reset and in hardware standby mode.

17.2.2 D/A Control Register (DACR)

Bit :	7	6	5	4	3	2	1	0
	DAOE1	DAOE0	DAE	—	—	—	—	—
Initial value :	0	0	0	1	1	1	1	1
R/W :	R/W	R/W	R/W	—	—	—	—	—

DACR is an 8-bit readable/writable register that controls the operation of the D/A converter.

DACR is initialized to H'1F by a reset and in hardware standby mode.

Bit 7—D/A Output Enable 1 (DAOE1): Controls D/A conversion and analog output for channel 1.

Bit 7 DAOE1	Description	
0	Analog output DA1 is disabled	(Initial value)
1	Channel 1 D/A conversion is enabled; analog output DA1 is enabled	

Bit 6—D/A Output Enable 0 (DAOE0): Controls D/A conversion and analog output for channel 0.

Bit 6 DAOE0	Description	
0	Analog output DA0 is disabled	(Initial value)
1	Channel 0 D/A conversion is enabled; analog output DA0 is enabled	

Bit 5—D/A Enable (DAE): The DAOE0 and DAOE1 bits both control D/A conversion. When the DAE bit is cleared to 0, the channel 0 and 1 D/A conversions are controlled independently. When the DAE bit is set to 1, the channel 0 and 1 D/A conversions are controlled together.

Output of resultant conversions is always controlled independently by the DAOE0 and DAOE1 bits.

Bit 7 DAOE1	Bit 6 DAOE0	Bit 5 DAE	Description
0	0	×	Channel 0 and 1 D/A conversions disabled
	1	0	Channel 0 D/A conversion enabled Channel 1 D/A conversion disabled
		1	Channel 0 and 1 D/A conversions enabled
1	0	0	Channel 0 D/A conversion disabled Channel 1 D/A conversion enabled
		1	Channel 0 and 1 D/A conversions enabled
	1	×	Channel 0 and 1 D/A conversions enabled

×: Don't care

If the H8S/2357 Group enters software standby mode when D/A conversion is enabled, the D/A output is held and the analog power current is the same as during D/A conversion. When it is necessary to reduce the analog power current in software standby mode, clear both the DAOE0 and DAOE1 bits to 0 to disable D/A output.

Bits 4 to 0—Reserved: These bits cannot be modified and are always read as 1.

17.2.3 Module Stop Control Register (MSTPCR)

	MSTPCRH								MSTPCRL							
Bit :	15	14	13	12	11	10	9	8	7	6	5	4	3	2	1	0
Initial value :	0	0	1	1	1	1	1	1	1	1	1	1	1	1	1	1
R/W :	R/W	R/W	R/W	R/W	R/W	R/W	R/W	R/W	R/W	R/W	R/W	R/W	R/W	R/W	R/W	R/W

MSTPCR is a 16-bit readable/writable register that performs module stop mode control.

When the MSTP10 bit in MSTPCR is set to 1, D/A converter operation stops at the end of the bus cycle and a transition is made to module stop mode. Registers cannot be read or written to in module stop mode. For details, see section 21.5, Module Stop Mode.

MSTPCR is initialized to H'3FFF by a reset and in hardware standby mode. It is not initialized in software standby mode.

Bit 10—Module Stop (MSTP10): Specifies the D/A converter module stop mode.

Bit 10 MSTP10	Description	
0	D/A converter module stop mode cleared	
1	D/A converter module stop mode set	(Initial value)

17.3 Operation

The D/A converter includes D/A conversion circuits for two channels, each of which can operate independently.

D/A conversion is performed continuously while enabled by DACR. If either DADR0 or DADR1 is written to, the new data is immediately converted. The conversion result is output by setting the corresponding DAOE0 or DAOE1 bit to 1.

The operation example described in this section concerns D/A conversion on channel 0. Figure 17-2 shows the timing of this operation.

[1] Write the conversion data to DADR0.

[2] Set the DAOE0 bit in DACR to 1. D/A conversion is started and the DA0 pin becomes an output pin. The conversion result is output after the conversion time has elapsed. The output value is expressed by the following formula:

$$\frac{\text{DADR contents}}{256} \times V_{ref}$$

The conversion results are output continuously until DADR0 is written to again or the DAOE0 bit is cleared to 0.

[3] If DADR0 is written to again, the new data is immediately converted. The new conversion result is output after the conversion time has elapsed.

[4] If the DAOE0 bit is cleared to 0, the DA0 pin becomes an input pin.

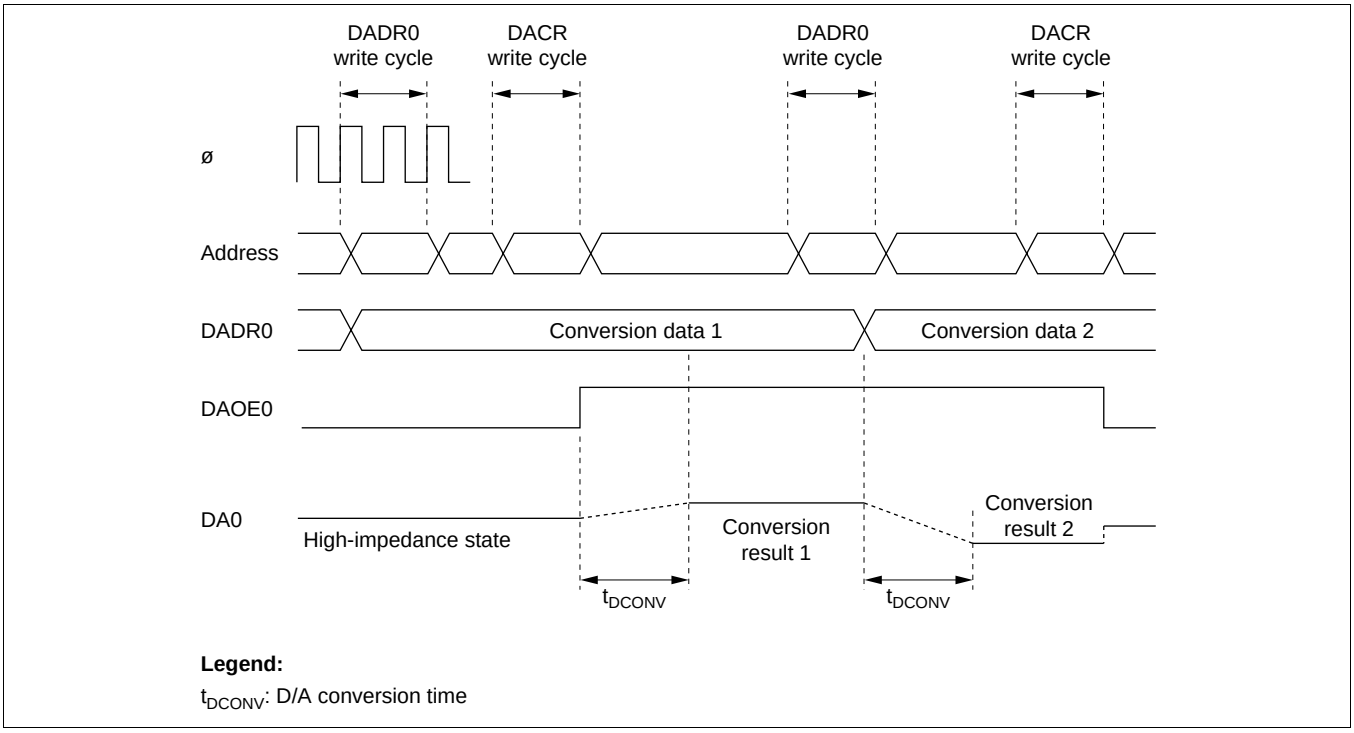

Figure 17-2 Example of D/A Converter Operation

Section 18 RAM

18.1 Overview

The H8S/2357, H8S/2352, H8S/2398, and H8S/2392 have 8 kbytes of on-chip high-speed static RAM. The H8S/2394 has 32 kbytes of on-chip high-speed static RAM. The H8S/2390 has 4 kbytes of on-chip high-speed static RAM. The on-chip RAM is connected to the CPU by a 16-bit bus, and accessing both byte data and word data can be performed in a single state. Thus, high-speed transfer of word data is possible.

The on-chip RAM can be enabled or disabled by means of the RAM enable bit (RAME) in the system control register (SYSCR).

18.1.1 Block Diagram

Figure 18-1 shows a block diagram of the 8-kbytes of on-chip RAM.

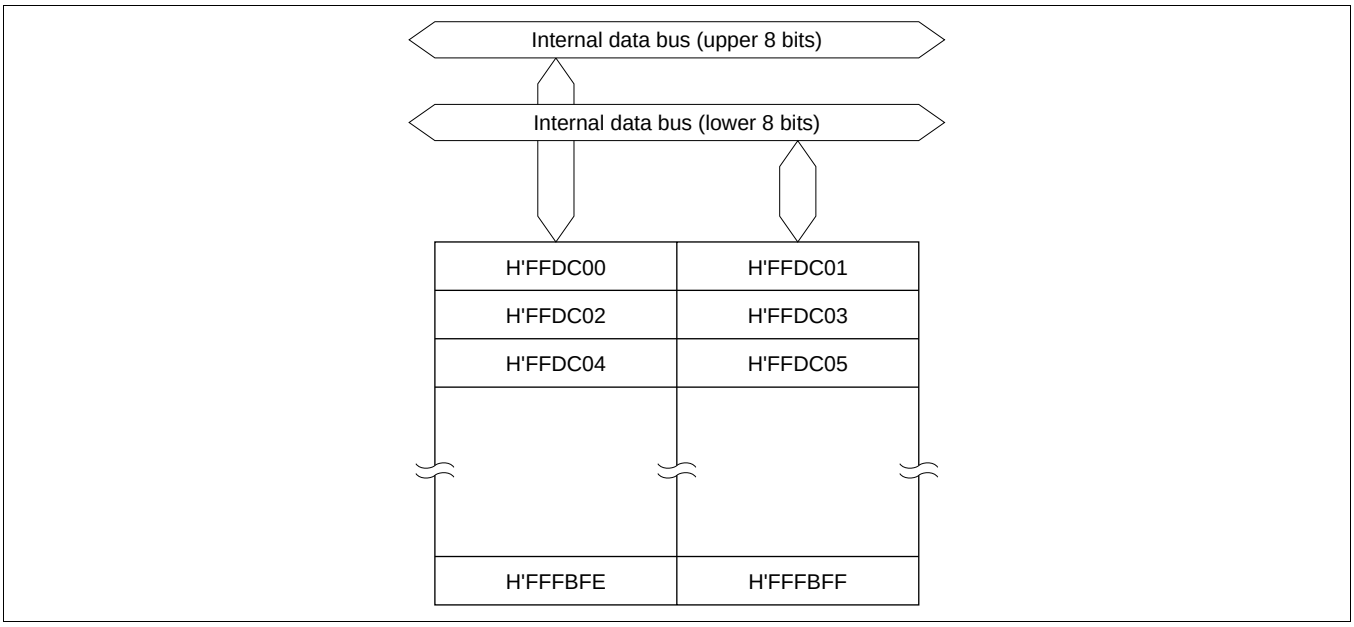

Figure 18-1 Block Diagram of RAM (8 kbyte)

18.1.2 Register Configuration

The on-chip RAM is controlled by SYSCR. Table 18-1 shows the address and initial value of SYSCR.

Table 18-1 RAM Register

Name	Abbreviation	R/W	Initial Value	Address*
System control register	SYSCR	R/W	H'01	H'FF39

Note: * Lower 16 bits of the address.

18.2 Register Descriptions

18.2.1 System Control Register (SYSCR)

Bit :	7	6	5	4	3	2	1	0
	—	—	INTM1	INTM0	NMIEG	—	—	RAME
Initial value :	0	0	0	0	0	0	0	1
R/W :	R/W	—	R/W	R/W	R/W	—	R/W	R/W

The on-chip RAM is enabled or disabled by the RAME bit in SYSCR. For details of other bits in SYSCR, see section 3.2.2, System Control Register (SYSCR).

Bit 0—RAM Enable (RAME): Enables or disables the on-chip RAM. The RAME bit is initialized when the reset state is released. It is not initialized in software standby mode.

Bit 0 RAME	Description	
0	On-chip RAM is disabled	
1	On-chip RAM is enabled	(Initial value)

18.3 Operation

When the RAME bit is set to 1, accesses to addresses H'FFDC00 to H'FFFBFF* are directed to the on-chip RAM. When the RAME bit is cleared to 0, the off-chip address space is accessed.

Since the on-chip RAM is connected to the CPU by an internal 16-bit data bus, it can be written to and read in byte or word units. Each type of access can be performed in one state.

Even addresses use the upper 8 bits, and odd addresses use the lower 8 bits. Word data must start at an even address.

Note: * Since the on-chip RAM capacitance differs according to each product, see section 3.5, Memory Map in Each Operating Mode.

18.4 Usage Note

DTC register information can be located in addresses H'FFF800 to H'FFFBFF. When the DTC is used, the RAME bit must not be cleared to 0.

Section 19 ROM

19.1 Overview

This series has 256, or 128 kbytes of flash memory, 256 or 128 kbytes of masked ROM, or 128 kbytes of PROM. The ROM is connected to the H8S/2000 CPU by a 16-bit data bus. The CPU accesses both byte data and word data in one state, making possible rapid instruction fetches and high-speed processing.

The on-chip ROM is enabled or disabled by setting the mode pins (MD_2, MD_1, and MD_0) and bit EAE in BCRL.

The flash memory versions of the H8S/2357 Group can be erased and programmed on-board as well as with a PROM programmer.

The PROM version of the H8S/2357 Group can be programmed with a PROM programmer, by setting PROM mode.

19.1.1 Block Diagram

Figure 19-1 shows a block diagram of the on-chip ROM.

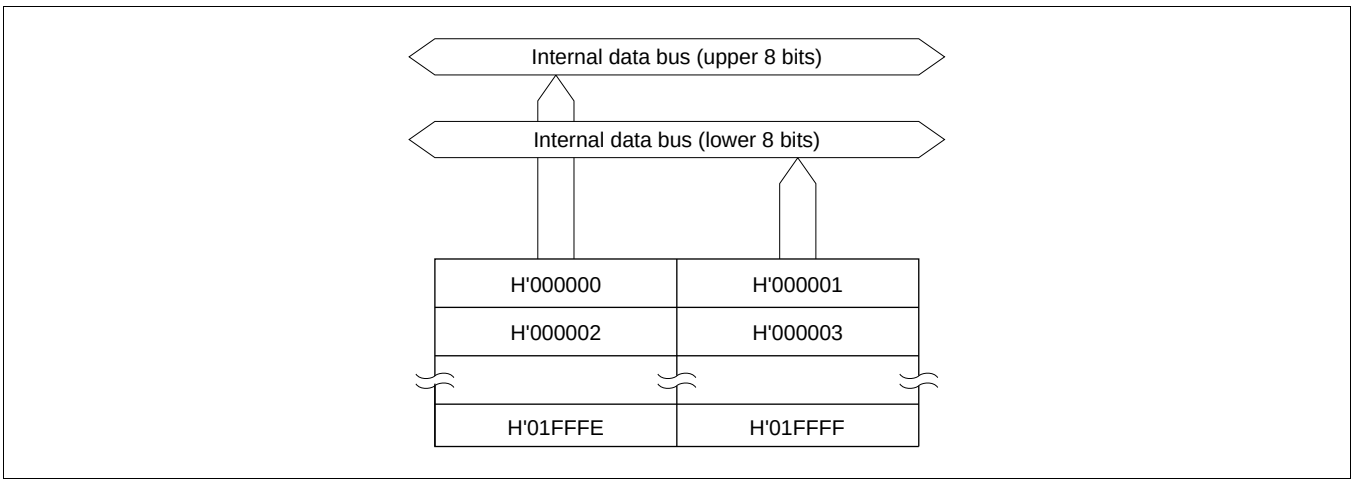

Figure 19-1 Block Diagram of ROM (128 kbytes)

19.1.2 Register Configuration

The H8S/2357's on-chip ROM is controlled by the mode pins and register BCRL. The register configuration is shown in table 19-1.

Table 19-1 ROM Register

Name	Abbreviation	R/W	Initial Value	Address*
Mode control register	MDCR	R/W	Undefined	H'FF3B
Bus control register L	BCRL	R/W	Undefined	H'FED5

Note: * Lower 16 bits of the address.

19.2 Register Descriptions

19.2.1 Mode Control Register (MDCR)

Bit :	7	6	5	4	3	2	1	0
	—	—	—	—	—	MDS2	MDS1	MDS0
Initial value :	1	0	0	0	0	—*	—*	—*
R/W :	—	—	—	—	—	R	R	R

Note: * Determined by pins MD_2 to MD_0.

MDCR is an 8-bit read-only register that indicates the current operating mode of the H8S/2357 Group.

Bit 7—Reserved: This bit cannot be modified and is always read as 1.

Bits 6 to 3—Reserved: These bits cannot be modified and are always read as 0.

Bits 2 to 0—Mode Select 2 to 0 (MDS2 to MDS0): These bits indicate the input levels at pins MD_2 to MD_0 (the current operating mode). Bits MDS_2 to MDS_0 correspond to pins MD_2 to MD_0. MDS2 to MDS0 are read-only bits, and cannot be written to. The mode pin (MD_2 to MD_0) input levels are latched into these bits when MDCR is read. These latches are canceled by a power-on reset, but are retained after a manual reset*.

Note: * Manual reset is only supported in the H8S/2357 ZTAT.

19.2.2 Bus Control Register L (BCRL)

Bit :	7	6	5	4	3	2	1	0
	BRLE	BREQOE	EAE	LCASS	DDS	—	WDBE	WAITE
Initial value :	0	0	1	1	1	1	0	0
R/W :	R/W	R/W	R/W	R/W	R/W	R/W	R/W	R/W

Enabling or disabling of part of the H8S/2357's on-chip ROM area can be selected by means of the EAE bit in BCRL. For details of the other bits in BCRL, see section 6.2.5, Bus Control Register L (BCRL).

Bit 5—External Address Enable (EAE): Selects whether addresses H'010000 to H'01FFFF*[2] are to be internal addresses or external addresses.

Bit 5 EAE	Description
0	Addresses H'010000 to H'01FFFF*[2] are in on-chip ROM
1	Addresses H'010000 to H'01FFFF*[2] are external addresses (external expansion mode) or a reserved area*[1] (single-chip mode). (Initial value)

Notes: 1. Reserved areas should not be accessed.
2. Addresses H'010000 to H'01FFFF are in the H8S/2357. Addresses H'010000 to H'03FFFF are in the H8S/2398.

19.3 Operation

The on-chip ROM is connected to the CPU by a 16-bit data bus, and both byte and word data can be accessed in one state. Even addresses are connected to the upper 8 bits, and odd addresses to the lower 8 bits. Word data must start at an even address.

The on-chip ROM is enabled and disabled by setting the mode pins (MD_2, MD_1, and MD_0) and bit EAE in BCRL. These settings are shown in tables 19-2 and 19-3.

Table 19-2 Operating Modes and ROM Area (H8S/2357 F-ZTAT)

		Mode Pin				BCRL	
Operating Mode		**FWE**	**MD_2**	**MD_1**	**MD_0**	**EAE**	**On-Chip ROM**
Mode 0	—	0	0	0	0	—	—
Mode 1					1		
Mode 2				1	0		
Mode 3					1		
Mode 4	Advanced expanded mode with on-chip ROM disabled		1	0	0	—	Disabled
Mode 5	Advanced expanded mode with on-chip ROM disabled				1		
Mode 6	Advanced expanded mode with on-chip ROM enabled			1	0	0	Enabled (128 kbytes)*1
						1	Enabled (64 kbytes)
Mode 7	Advanced single-chip mode				1	0	Enabled (128 kbytes)*1
						1	Enabled (64 kbytes)
Mode 8	—	1	0	0	0	—	—
Mode 9					1		
Mode 10	Boot mode (advanced expanded mode with on-chip ROM enabled)*3			1	0	0	Enabled (128 kbytes)*2
						1	Enabled (64 kbytes)
Mode 11	Boot mode (advanced single-chip mode)*4				1	0	Enabled (128 kbytes)*2
						1	Enabled (64 kbytes)
Mode 12	—		1	0	0	—	—
Mode 13					1		
Mode 14	User program mode (advanced expanded mode with on-chip ROM enabled)*3			1	0	0	Enabled (128 kbytes)*1
						1	Enabled (64 kbytes)
Mode 15	User program mode (advanced single-chip mode)*4				1	0	Enabled (128 kbytes)*1
						1	Enabled (64 kbytes)

Notes: 1. Note that in modes 6, 7, 14, and 15, the on-chip ROM that can be used after a power-on reset is the 64-kbyte area from H'000000 to H'00FFFF.
2. Note that in the mode 10 and mode 11 boot modes, the on-chip ROM that can be used immediately after all flash memory is erased by the boot program is the 64-kbyte area from H'000000 to H'00FFFF.
3. Apart from the fact that flash memory can be erased and programmed, operation is the same as in advanced expanded mode with on-chip ROM enabled.
4. Apart from the fact that flash memory can be erased and programmed, operation is the same as in advanced single-chip mode.

Table 19-3 Operating Modes and ROM Area (ZTAT or Masked ROM, ROMless, Versions H8S/2398F-ZTAT)

Operating Mode		Mode Pin MD2	MD1	MD0	BCRL EAE	On-Chip ROM
Mode 0	—	0	0	0	—	—
Mode 1				1		
Mode 2*[2]			1	0		
Mode 3*[2]				1		
Mode 4*[3]	Advanced expanded mode with on-chip ROM disabled	1	0	0	—	Disabled
Mode 5*[3]	Advanced expanded mode with on-chip ROM disabled			1		
Mode 6	Advanced expanded mode with on-chip ROM enabled		1	0	0	Enabled (128 kbytes)*[1]
					1	Enabled (64 kbytes)
Mode 7	Advanced single-chip mode			1	0	Enabled (128 kbytes)*[1]
					1	Enabled (64 kbytes)

Notes: 1. Modes 6 and 7, the on-chip ROM available after a power-on reset is the 64-kbyte area comprising addresses H'000000 to H'00FFFF.
Since the on-chip ROM area differs according to each product, see section 3.5, Memory Map in Each Operating Mode.

2. In the H8S/2398 F-ZTAT, modes 2 and 3 indicate boot mode. For details on boot mode of H8S/2398 F-ZTAT, refer to table 19-35 in section 19.17, On-Board Programming Modes.
In addition, for details on user program mode, refer also to and 19-35 in section 19.17, On-Board Programming Modes.

3. In ROMless version, only modes 4 and 5 are available.

19.4 PROM Mode (H8S/2357 ZTAT)

19.4.1 PROM Mode Setting

The PROM version of the H8S/2357 suspends its microcontroller functions when placed in PROM mode, enabling the on-chip PROM to be programmed. This programming can be done with a PROM programmer set up in the same way as for the HN27C101 EPROM (V_{PP} = 12.5 V). Use of a 120/128-pin to 32-pin socket adapter enables programming with a commercial PROM programmer.

Note that the PROM programmer should not be set to page mode as the H8S/2357 does not support page programming.

Table 19-4 shows how PROM mode is selected.

Table 19-4 Selecting PROM Mode

Pin Names	Setting
MD_2, MD_1, MD_0	Low
$\overline{STBY}$	
PA_2, PA_1	High

19.4.2 Socket Adapter and Memory Map

Programs can be written and verified by attaching a socket adapter to the PROM programmer to convert from a 120/128-pin arrangement to a 32-pin arrangement. Table 19-5 gives ordering information for the socket adapter, and figure 19-2 shows the wiring of the socket adapter. Figure 19-3 shows the memory map in PROM mode.

H8S/2357			EPROM socket	
TFP-120	FP-128B	Pin	Pin	HN27C101 (32 Pins)
73	81	$\overline{RES}$	V_{PP}	1
43	49	PD_0	EO_0	13
44	50	PD_1	EO_1	14
45	51	PD_2	EO_2	15
46	52	PD_3	EO_3	17
48	54	PD_4	EO_4	18
49	55	PD_5	EO_5	19
50	56	PD_6	EO_6	20
51	57	PD_7	EO_7	21
2	6	PC_0	EA_0	12
3	7	PC_1	EA_1	11
4	8	PC_2	EA_2	10
5	9	PC_3	EA_3	9
7	11	PC_4	EA_4	8
8	12	PC_5	EA_5	7
9	13	PC_6	EA_6	6
10	14	PC_7	EA_7	5
11	15	PB_0	EA_8	27
74	82	NMI	EA_9	26
13	17	PB_2	EA_{10}	23
14	18	PB_3	EA_{11}	25
16	20	PB_4	EA_{12}	4
17	21	PB_5	EA_{13}	28
18	22	PB_6	EA_{14}	29
19	23	PB_7	EA_{15}	3
20	24	PA_0	EA_{16}	2
86	94	PF_2	$\overline{CE}$	22
12	16	PB_1	$\overline{OE}$	24
87	95	PF_1	$\overline{PGM}$	31
1, 33, 52, 76, 81	5, 39, 58, 84, 89	V_{CC}	V_{CC}	32
93	103	AV_{CC}		
94	104	V_{ref}		
21	25	PA_1		
22	26	PA_2		
6, 15, 24, 38, 47, 59, 79, 104	3, 10, 19, 28, 35, 36, 44, 53, 65, 67, 68, 87, 99,100,114	V_{SS}	V_{SS}	16
103	113	AV_{SS}		
75	83	$\overline{STBY}$		
113	123	MD_0		
114	124	MD_1		
115	125	MD_2		

V_{PP}: Programming power supply (12.5 V)
EO_7 to EO_0: Data input/output
EA_{16} to EA_0: Address input
$\overline{OE}$: Output enable
$\overline{CE}$: Chip enable
$\overline{PGM}$: Program

Note: Pins not shown in this figure should be left open.

Figure 19-2 Wiring of 120/128B-Pin Socket Adapter

Table 19-5 Socket Adapter

Microcontroller	Package	Socket Adapter
H8S/2357	120 pin TQFP (TFP-120)	HS2655ESNS1H
	128 pin QFP (FP-128B)	HS2655ESHS1H

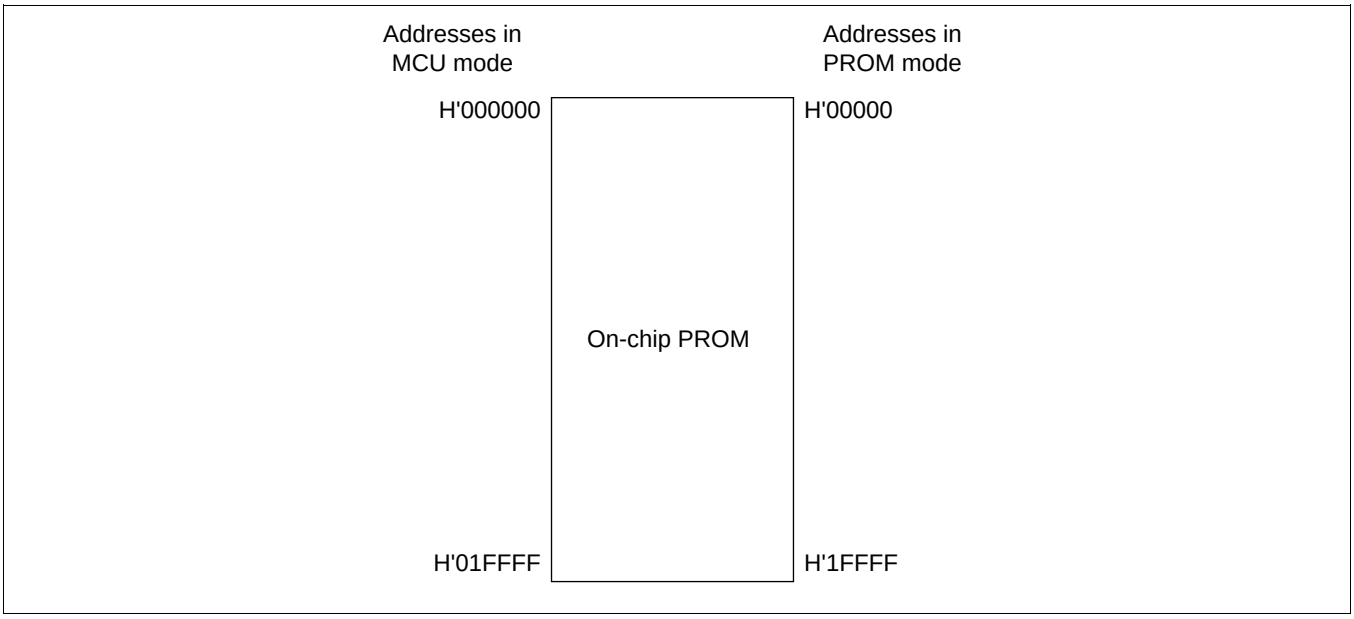

Figure 19-3 Memory Map in PROM Mode

19.5 Programming (H8S/2357 ZTAT)

19.5.1 Overview

Table 19-6 shows how to select the program, verify, and program-inhibit modes in PROM mode.

Table 19-6 Mode Selection in PROM Mode

	Pins						
Mode	**$\overline{CE}$**	**$\overline{OE}$**	**$\overline{PGM}$**	**V_{PP}**	**V_{CC}**	**EO_7 to EO_0**	**EA_{16} to EA_0**
Program	L	H	L	V_{PP}	V_{CC}	Data input	Address input
Verify	L	L	H	V_{PP}	V_{CC}	Data output	Address input
Program-inhibit	L	L	L	V_{PP}	V_{CC}	High impedance	Address input
	L	H	H				
	H	L	L				
	H	H	H				

Legend:
L: Low voltage level
H: High voltage level
V_{PP}: V_{PP} voltage level
V_{CC}: V_{CC} voltage level

Programming and verification should be carried out using the same specifications as for the standard HN27C101 EPROM.

However, do not set the PROM programmer to page mode, as the H8S/2357 does not support page programming. A PROM programmer that only supports page programming cannot be used. When choosing a PROM programmer, check that it supports high-speed programming in byte units. Always set addresses within the range H'00000 to H'1FFFF.

19.5.2 Programming and Verification

An efficient, high-speed programming procedure can be used to program and verify PROM data. This procedure writes data quickly without subjecting the chip to voltage stress or sacrificing data reliability. It leaves the data H'FF in unused addresses. Figure 19-4 shows the basic high-speed programming flowchart. Tables 19-7 and 19-8 list the electrical characteristics of the chip during programming. Figure 19-5 shows a timing chart.

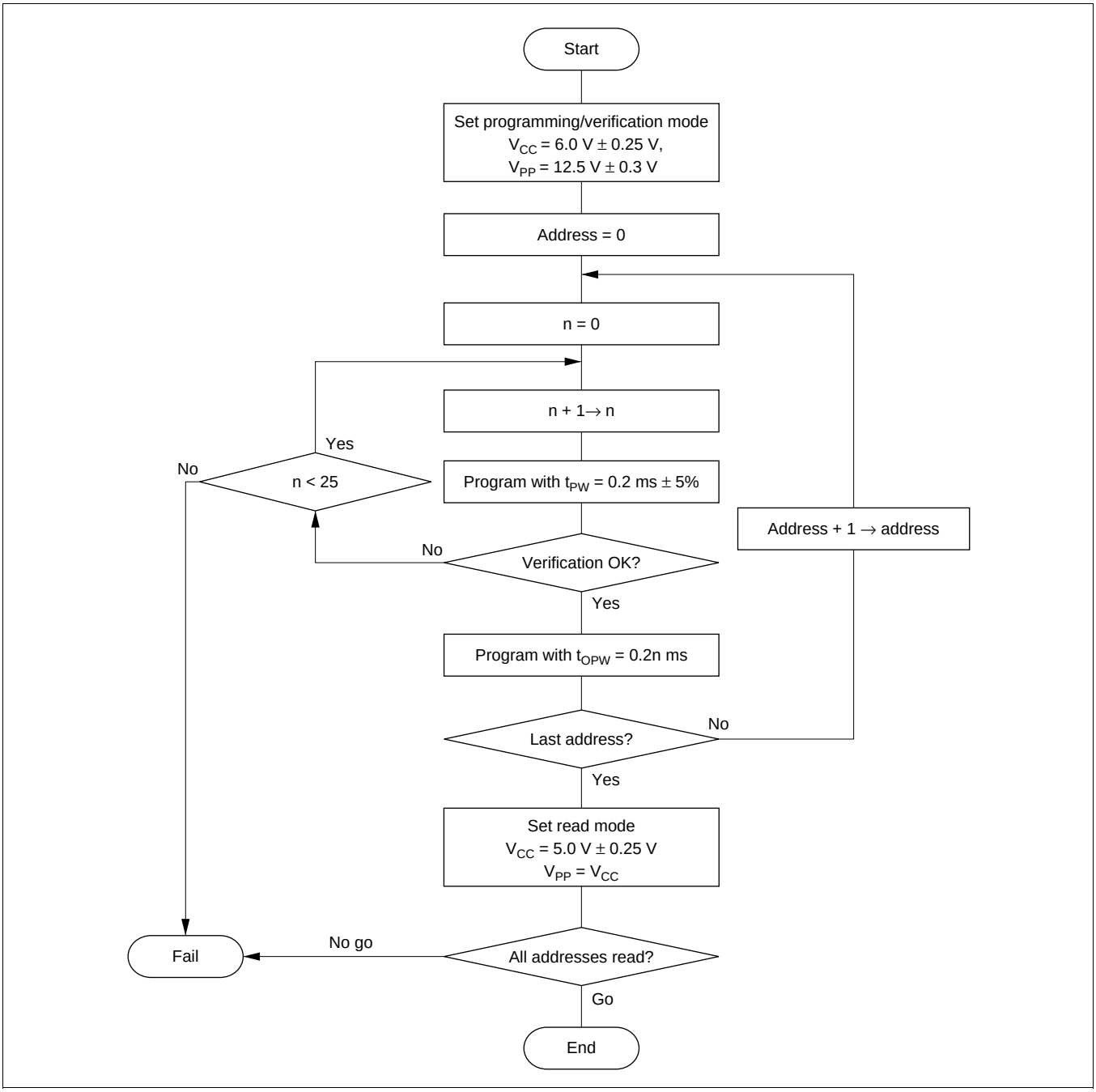

Figure 19-4 High-Speed Programming Flowchart

Table 19-7 DC Characteristics in PROM Mode

Conditions: V_{CC} = 6.0 V ± 0.25 V, V_{PP} = 12.5 V ± 0.3 V, V_{SS} = 0 V, T_a = 25°C ± 5°C

Item		Symbol	Min	Typ	Max	Unit	Test Conditions
Input high voltage	EO_7 to EO_0, EA_{16} to EA_0, $\overline{OE}$, $\overline{CE}$, $\overline{PGM}$	V_{IH}	2.4	—	V_{CC} + 0.3	V	
Input low voltage	EO_7 to EO_0, EA_{16} to EA_0, $\overline{OE}$, $\overline{CE}$, $\overline{PGM}$	V_{IL}	–0.3	—	0.8	V	
Output high voltage	EO_7 to EO_0	V_{OH}	2.4	—	—	V	I_{OH} = –200 µA
Output low voltage	EO_7 to EO_0	V_{OL}	—	—	0.45	V	I_{OL} = 1.6 mA
Input leakage current	EO_7 to EO_0, EA_{16} to EA_0, $\overline{OE}$, $\overline{CE}$, $\overline{PGM}$	$\lvert I_{LI} \rvert$	—	—	2	µA	V_{in} = 5.25 V/0.5 V
V_{CC} current		I_{CC}	—	—	40	mA	
V_{PP} current		I_{PP}	—	—	40	mA	

Table 19-8 AC Characteristics in PROM Mode

Conditions: V_{CC} = 6.0 V ± 0.25 V, V_{PP} = 12.5 V ± 0.3 V, T_a = 25°C ± 5°C

Item	Symbol	Min	Typ	Max	Unit	Test Conditions
Address setup time	t_{AS}	2	—	—	µs	Figure 19-5*[1]
$\overline{OE}$ setup time	t_{OES}	2	—	—	µs	
Data setup time	t_{DS}	2	—	—	µs	
Address hold time	t_{AH}	0	—	—	µs	
Data hold time	t_{DH}	2	—	—	µs	
Data output disable time	t_{DF}*[2]	—	—	130	ns	
V_{PP} setup time	t_{VPS}	2	—	—	µs	
Programming pulse width	t_{PW}	0.19	0.20	0.21	ms	
$\overline{PGM}$ pulse width for overwrite programming	t_{OPW}*[3]	0.19	—	5.25	ms	
V_{CC} setup time	t_{VCS}	2	—	—	µs	
$\overline{CE}$ setup time	t_{CES}	2	—	—	µs	
Data output delay time	t_{OE}	0	—	150	ns	

Notes: 1. Input pulse level: 0.8 V to 2.2 V
Input rise time and fall time ≤ 20 ns
Timing reference levels: Input: 1.0 V, 2.0 V
Output: 0.8 V, 2.0 V

2. t_{DF} is defined to be when output has reached the open state, and the output level can no longer be referenced.
3. t_{OPW} is defined by the value shown in the flowchart.

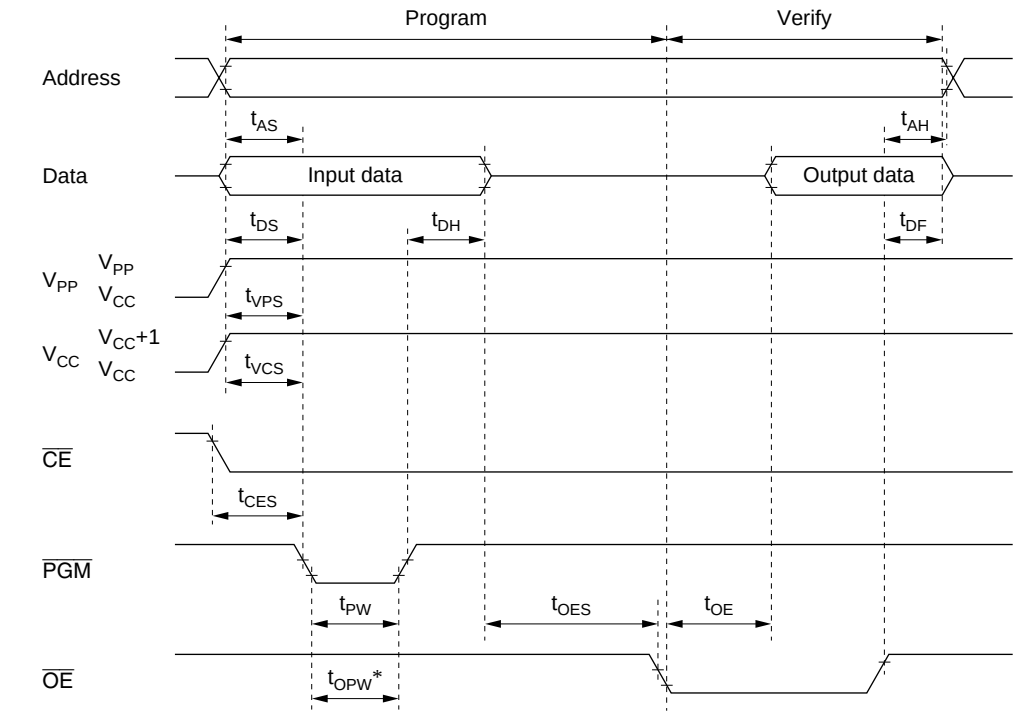

Note: * t_{OPW} is defined by the value shown in the flowchart.

Figure 19-5 PROM Programming/Verification Timing

19.5.3 Programming Precautions

- Program using the specified voltages and timing.
  The programming voltage (V_{PP}) in PROM mode is 12.5 V.
  If the PROM programmer is set to Renesas Technology HN27C101 specifications, V_{PP} will be 12.5 V. Applied voltages in excess of the specified values can permanently destroy the MCU. Be particularly careful about the PROM programmer's overshoot characteristics.

- Before programming, check that the MCU is correctly mounted in the PROM programmer. Overcurrent damage to the MCU can result if the index marks on the PROM programmer, socket adapter, and MCU are not correctly aligned.

- Do not touch the socket adapter or MCU while programming. Touching either of these can cause contact faults and programming errors.

- The MCU cannot be programmed in page programming mode. Select the programming mode carefully.

- The size of the H8S/2357 PROM is 128 kbytes. Always set addresses within the range H'00000 to H'1FFFF. During programming, write H'FF to unused addresses to avoid verification errors.

19.5.4 Reliability of Programmed Data

An effective way to assure the data retention characteristics of the programmed chips is to bake them at 150°C, then screen them for data errors. This procedure quickly eliminates chips with PROM memory cells prone to early failure.

Figure 19-6 shows the recommended screening procedure.

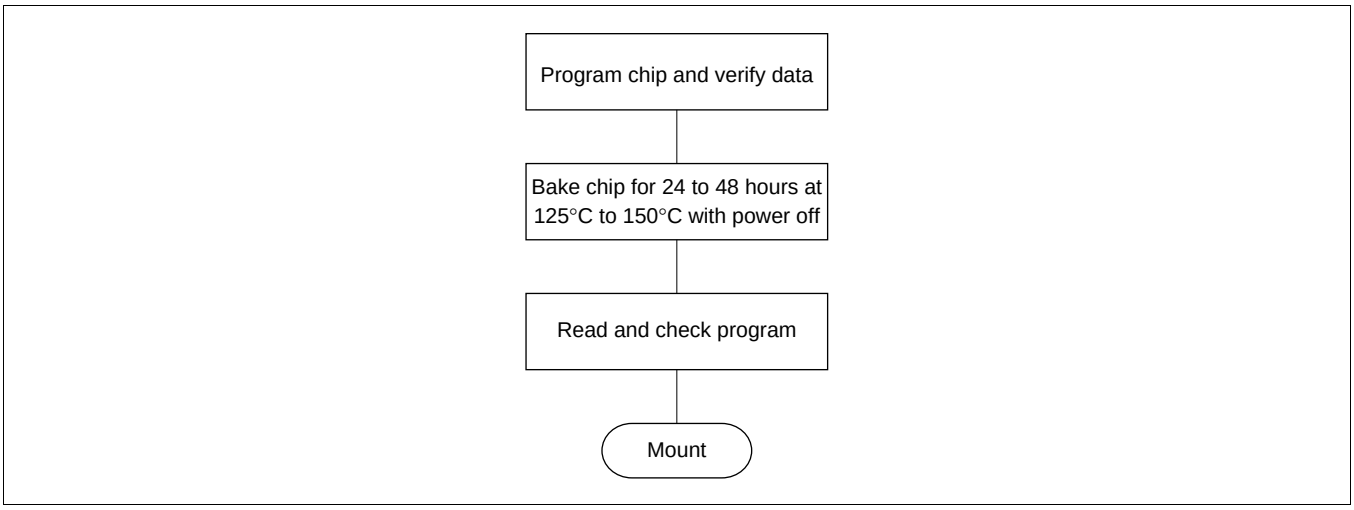

Figure 19-6 Recommended Screening Procedure

If a series of programming errors occurs while the same PROM programmer is being used, stop programming and check the PROM programmer and socket adapter for defects.

Please inform Renesas Technology of any abnormal conditions noted during or after programming or in screening of program data after high-temperature baking.

19.6 Overview of Flash Memory (H8S/2357 F-ZTAT)

19.6.1 Features

The features of the flash memory are summarized below.

- Four flash memory operating modes
  - Program mode
  - Erase mode
  - Program-verify mode
  - Erase-verify mode

- Programming/erase methods

  The flash memory is programmed 32 bytes at a time. Erasing is performed by block erase (in single-block units). When erasing multiple blocks, the individual blocks must be erased sequentially. Block erasing can be performed as required on 1-kbyte, 8-kbyte, 16-kbyte, 28-kbyte, and 32-kbyte blocks.

- Programming/erase times (5 V version)

  The flash memory programming time is 10 ms (typ.) for simultaneous 32-byte programming, equivalent to 300 μs (typ.) per byte, and the erase time is 100 ms (typ.) per block.

- Reprogramming capability

  The flash memory can be reprogrammed up to 100 times.

- On-board programming modes

  There are two modes in which flash memory can be programmed/erased/verified on-board
  - Boot mode
  - User program mode

- Automatic bit rate adjustment

  With data transfer in boot mode, the bit rate of the H8S/2357 Group chip can be automatically adjusted to match the transfer bit rate of the host.

- Flash memory emulation by RAM

  Part of the RAM area can be overlapped onto flash memory, to emulate flash memory updates in real time.

- Protect modes

  There are three protect modes, hardware, software, and error protect, which allow protected status to be designated for flash memory program/erase/verify operations.

- Programmer mode

  Flash memory can be programmed/erased in programmer mode, using a PROM programmer, as well as in on-board programming mode.

19.6.2 Block Diagram

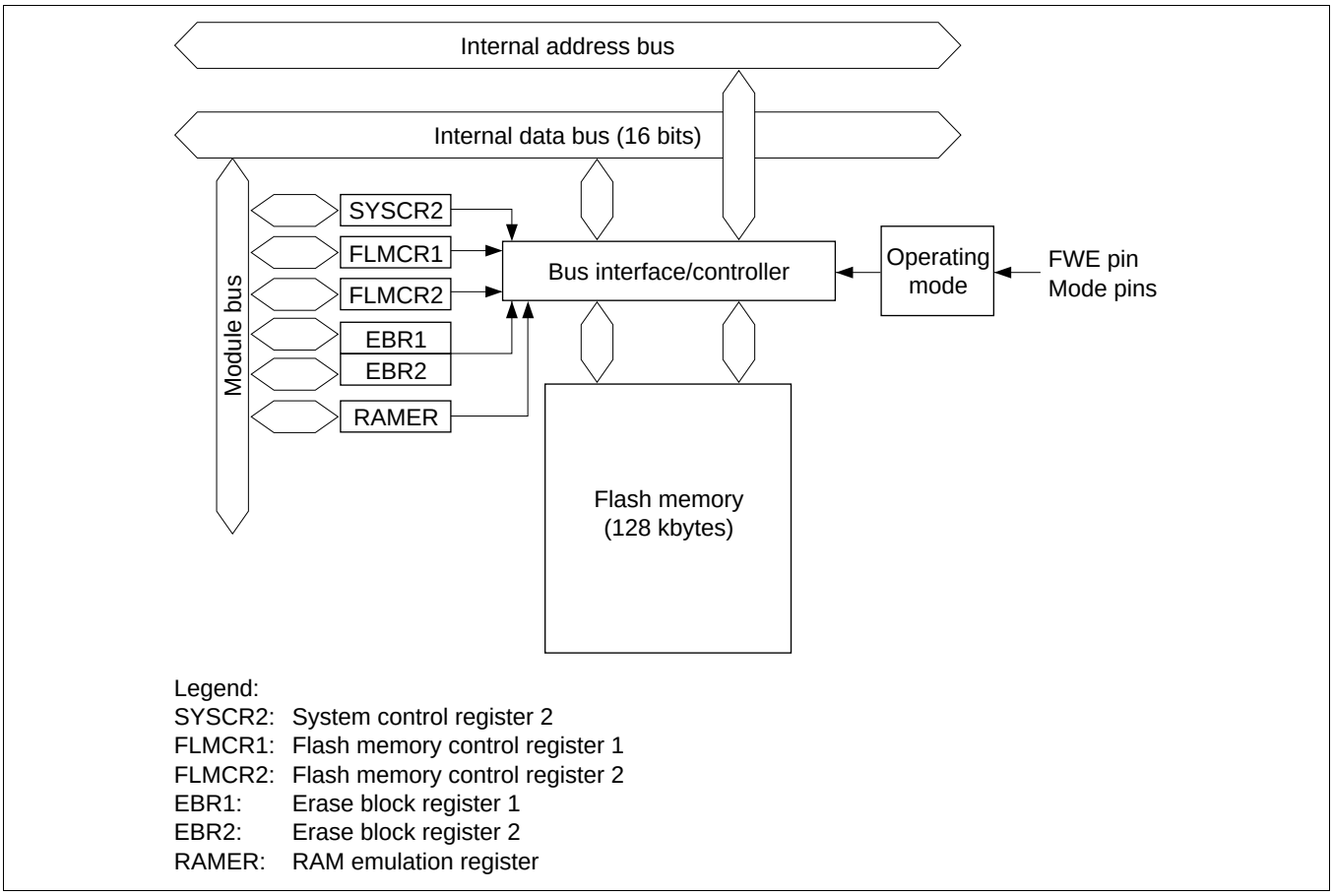

Figure 19-7 Block Diagram of Flash Memory

19.6.3 Flash Memory Operating Modes

Mode Transitions: When the mode pins and the FWE pin are set in the reset state and a reset-start is executed, the MCU enters one of the operating modes shown in figure 19-8. In user mode, flash memory can be read but not programmed or erased.

Flash memory can be programmed and erased in boot mode, user program mode, and programmer mode.

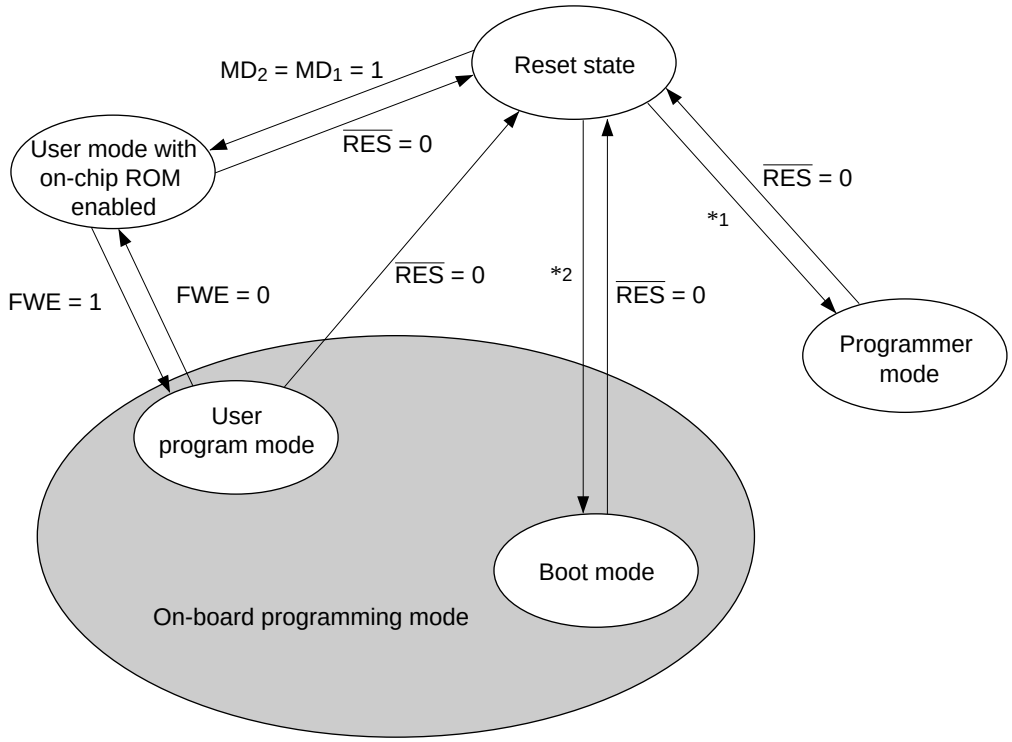

Notes: Only make a transition between user mode and user program mode when the CPU is not accessing the flash memory.

1. $MD_2 = MD_1 = MD_0 = 0$, P66 = 1, P65 = P64 = 0
2. NMI = 1, FWE = 1, $MD_2 = 0$, $MD_1 = 1$

Figure 19-8 Flash Memory Mode Transitions

On-Board Programming Modes

- Boot mode

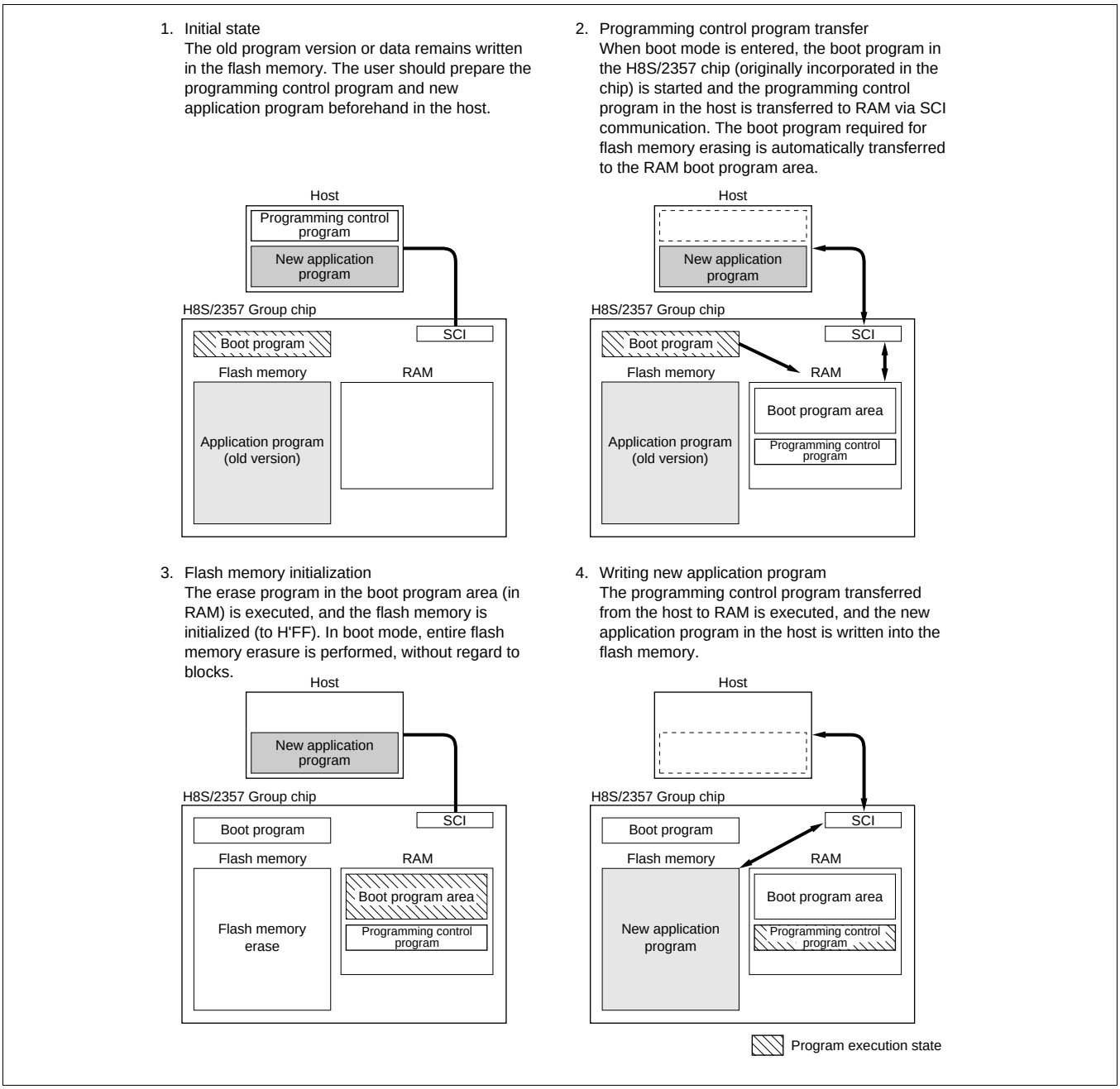

Figure 19-9 Boot Mode

- User program mode

1. Initial state
   (1) The FWE assessment program that confirms that the FWE pin has been driven high, and (2) the program that will transfer the programming/ erase control program to on-chip RAM should be written into the flash memory by the user beforehand. (3) The programming/erase control program should be prepared in the host or in the flash memory.

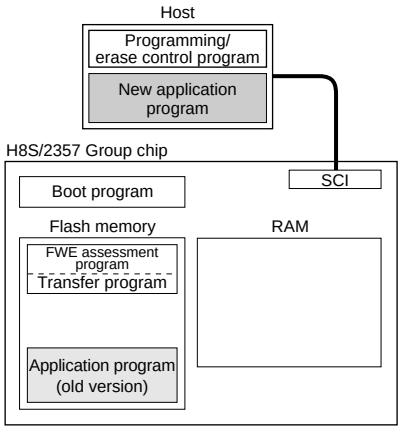

2. Programming/erase control program transfer
   When the FWE pin is driven high, user software confirms this fact, executes the transfer program in the flash memory, and transfers the programming/erase control program to RAM.

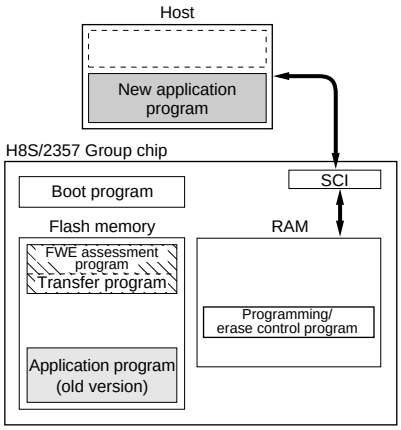

3. Flash memory initialization
   The programming/erase program in RAM is executed, and the flash memory is initialized (to H'FF). Erasing can be performed in block units, but not in byte units.

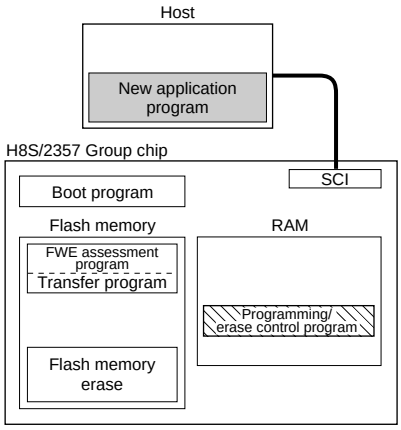

4. Writing new application program
   Next, the new application program in the host is written into the erased flash memory blocks. Do not write to unerased blocks.

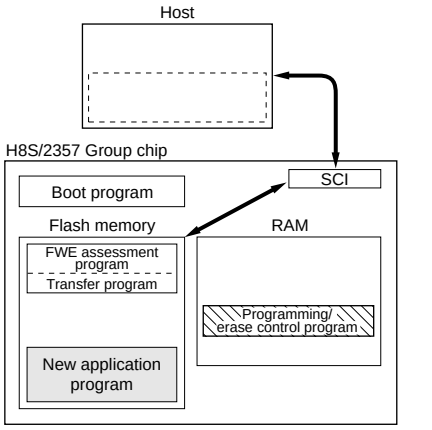

Program execution state

Figure 19-10 User Program Mode (Example)

Flash Memory Emulation in RAM

- Reading Overlap Data in User Mode and User Program Mode

  Emulation should be performed in user mode or user program mode. When the emulation block set in RAMER is accessed while the emulation function is being executed, data written in the overlap RAM is read.

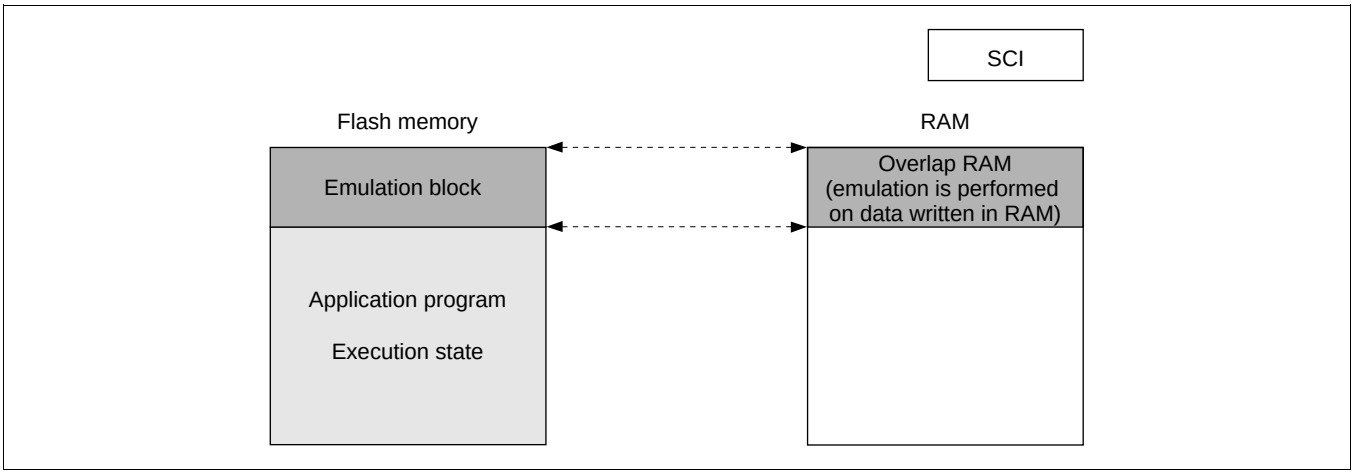

Figure 19-11 Reading Overlap Data in User Mode and User Program Mode

- Writing Overlap Data in User Program Mode

  When overlap RAM data is confirmed, the RAMS bit is cleared, RAM overlap is released, and writes should actually be performed to the flash memory.

  When the programming control program is transferred to RAM, ensure that the transfer destination and the overlap RAM do not overlap, as this will cause data in the overlap RAM to be rewritten.

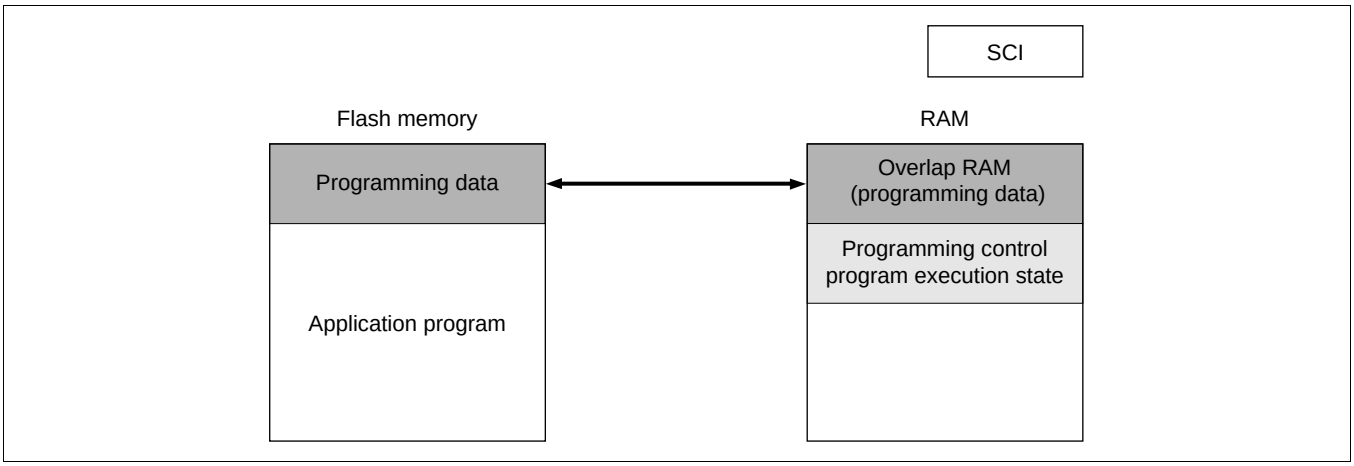

Figure 19-12 Writing Overlap Data in User Program Mode

Differences between Boot Mode and User Program Mode

Table 19-9 Differences between Boot Mode and User Program Mode

	Boot Mode	User Program Mode
Entire memory erase	Yes	Yes
Block erase	No	Yes
Programming control program*	Program/program-verify	Program/program-verify Erase/erase-verify

Note: * To be provided by the user, in accordance with the recommended algorithm.

Block Configuration: The flash memory is divided into two 32-kbyte blocks, two 8-kbyte blocks, one 16-kbyte block, one 28-kbyte block, and four 1-kbyte blocks.

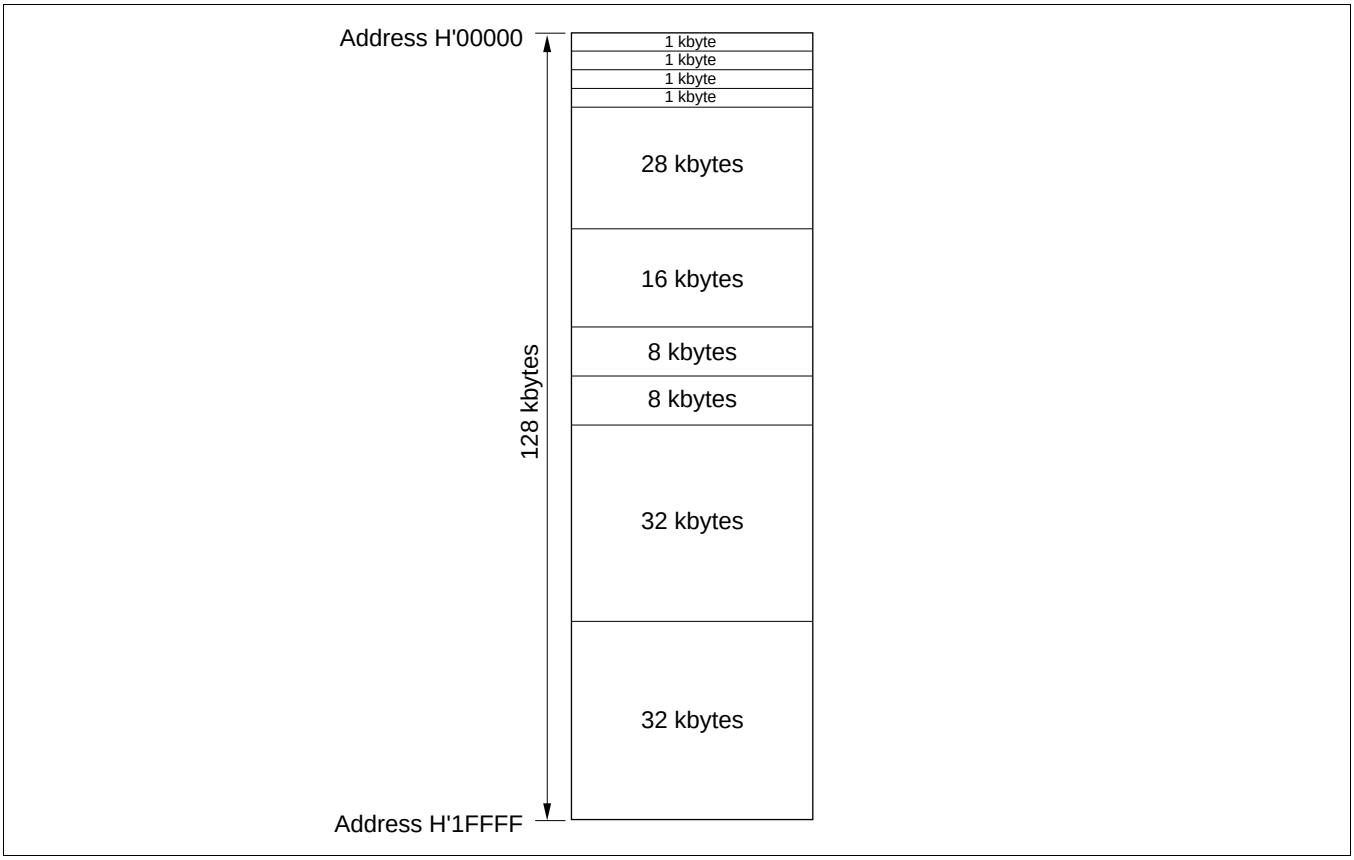

Figure 19-13 Flash Memory Block Configuration

19.6.4 Pin Configuration

The flash memory is controlled by means of the pins shown in table 19-10.

Table 19-10 Flash Memory Pins

Pin Name	Abbreviation	I/O	Function
Reset	$\overline{RES}$	Input	Reset
Flash write enable	FWE	Input	Flash program/erase protection by hardware
Mode 2	MD_2	Input	Sets MCU operating mode
Mode 1	MD_1	Input	Sets MCU operating mode
Mode 0	MD_0	Input	Sets MCU operating mode
Port 66	P66	Input	Sets MCU operating mode in programmer mode
Port 65	P65	Input	Sets MCU operating mode in programmer mode
Port 64	P64	Input	Sets MCU operating mode in programmer mode
Transmit data	TxD1	Output	Serial transmit data output
Receive data	RxD1	Input	Serial receive data input

19.6.5 Register Configuration

The registers used to control the on-chip flash memory when enabled are shown in table 19-11.
In order for these registers to be accessed, the FLSHE bit must be set to 1 in SYSCR2 (except RAMER).

Table 19-11 Flash Memory Registers

Register Name	Abbreviation	R/W	Initial Value	Address*[1]
Flash memory control register 1	FLMCR1*[6]	R/W*[3]	H'00*[4]	H'FFC8*[2]
Flash memory control register 2	FLMCR2*[6]	R/W*[3]	H'00*[5]	H'FFC9*[2]
Erase block register 1	EBR1*[6]	R/W*[3]	H'00*[5]	H'FFCA*[2]
Erase block register 2	EBR2*[6]	R/W*[3]	H'00*[5]	H'FFCB*[2]
System control register 2	SYSCR2*[7]	R/W	H'00	H'FF42
RAM emulation register	RAMER	R/W	H'00	H'FEDB

Notes:
1. Lower 16 bits of the address.
2. Flash memory registers are selected by the FLSHE bit in system control register 2 (SYSCR2).
3. In modes in which the on-chip flash memory is disabled, a read will return H'00, and writes are invalid. Writes are also disabled when the FWE bit is cleared to 0 in FLMCR1.
4. When a high level is input to the FWE pin, the initial value is H'80.
5. When a low level is input to the FWE pin, or if a high level is input and the SWE bit in FLMCR1 is not set, these registers are initialized to H'00.
6. FLMCR1, FLMCR2, EBR1, and EBR2 are 8-bit registers. Only byte accesses are valid for these registers, the access requiring 2 states.
7. SYSCR2 is available only in the F-ZTAT version. In the masked ROM and ZTAT versions, this register cannot be written to and will return an undefined value if read.

19.7 Register Descriptions

19.7.1 Flash Memory Control Register 1 (FLMCR1)

Bit	7	6	5	4	3	2	1	0
	FWE	SWE	—	—	EV	PV	E	P
Initial value	—*	0	0	0	0	0	0	0
Read/Write	R	R/W	—	—	R/W	R/W	R/W	R/W

Note: * Determined by the state of the FWE pin.

FLMCR1 is an 8-bit register used for flash memory operating mode control. Program-verify mode or erase-verify mode is entered by setting SWE to 1 when FWE = 1. Program mode is entered by setting SWE to 1 when FWE = 1, then setting the PSU bit in FLMCR2, and finally setting the P bit. Erase mode is entered by setting SWE to 1 when FWE = 1, then setting the ESU bit in FLMCR2, and finally setting the E bit. FLMCR1 is initialized by a reset, and in hardware standby mode and software standby mode. Its initial value is H'80 when a high level is input to the FWE pin, and H'00 when a low level is input. When on-chip flash memory is disabled, a read will return H'00, and writes are invalid.

Writes to the SWE bit in FLMCR1 are enabled only when FWE = 1; writes to the EV and PV bits only when FWE=1 and SWE=1; writes to the E bit only when FWE = 1, SWE = 1, and ESU = 1; and writes to the P bit only when FWE = 1, SWE = 1, and PSU = 1.

Bit 7—Flash Write Enable Bit (FWE): Sets hardware protection against flash memory programming/erasing. See section 19.14, Flash Memory Programming and Erasing Precautions, before using this bit.

Bit 7 FWE	Description
0	When a low level is input to the FWE pin (hardware-protected state)
1	When a high level is input to the FWE pin

Bit 6—Software Write Enable Bit (SWE): Enables or disables flash memory programming. SWE should be set before setting bits ESU, PSU, EV, PV, E, P, and EB9 to EB0, and should not be cleared at the same time as these bits.

Bit 6 SWE	Description
0	Writes disabled (Initial value)
1	Writes enabled [Setting condition] When FWE = 1

Bits 5 and 4—Reserved: These bits cannot be modified and are always read as 0.

Bit 3—Erase-Verify (EV): Selects erase-verify mode transition or clearing. Do not set the SWE, ESU, PSU, PV, E, or P bit at the same time.

Bit 3 EV	Description	
0	Erase-verify mode cleared	(Initial value)
1	Transition to erase-verify mode [Setting condition] When FWE = 1 and SWE = 1	

Bit 2—Program-Verify (PV): Selects program-verify mode transition or clearing. Do not set the SWE, ESU, PSU, EV, E, or P bit at the same time.

Bit 2 PV	Description	
0	Program-verify mode cleared	(Initial value)
1	Transition to program-verify mode [Setting condition] When FWE = 1 and SWE = 1	

Bit 1—Erase (E): Selects erase mode transition or clearing. Do not set the SWE, ESU, PSU, EV, PV, or P bit at the same time.

Bit 1 E	Description	
0	Erase mode cleared	(Initial value)
1	Transition to erase mode [Setting condition] When FWE = 1, SWE = 1, and ESU = 1	

Bit 0—Program (P): Selects program mode transition or clearing. Do not set the SWE, PSU, ESU, EV, PV, or E bit at the same time.

Bit 0 P	Description	
0	Program mode cleared	(Initial value)
1	Transition to program mode [Setting condition] When FWE = 1, SWE = 1, and PSU = 1	

19.7.2 Flash Memory Control Register 2 (FLMCR2)

Bit	7	6	5	4	3	2	1	0
	FLER	—	—	—	—	—	ESU	PSU
Initial value	0	0	0	0	0	0	0	0
Read/Write	R	—	—	—	—	—	R/W	R/W

FLMCR2 is an 8-bit register that monitors the presence or absence of flash memory program/erase protection (error protection) and performs setup for flash memory program/erase mode. FLMCR2 is initialized to H'00 by a reset, and in hardware standby mode. The ESU and PSU bits are cleared to 0 in software standby mode, hardware protect mode, and software protect mode.

When on-chip flash memory is disabled, a read will return H'00.

Bit 7—Flash Memory Error (FLER): Indicates that an error has occurred during an operation on flash memory (programming or erasing). When FLER is set to 1, flash memory goes to the error-protection state.

Bit 7 FLER	Description	
0	Flash memory is operating normally	(Initial value)
	Flash memory program/erase protection (error protection) is disabled	
	[Clearing condition]	
	Reset or hardware standby mode	
1	An error has occurred during flash memory programming/erasing	
	Flash memory program/erase protection (error protection) is enabled	
	[Setting condition]	
	See section 19.10.3, Error Protection	

Bits 6 to 2—Reserved: These bits cannot be modified and are always read as 0.

Bit 1—Erase Setup (ESU): Prepares for a transition to erase mode. Set this bit to 1 before setting the E bit to 1 in FLMCR1. Do not set the SWE, PSU, EV, PV, E, or P bit at the same time.

Bit 1 ESU	Description	
0	Erase setup cleared	(Initial value)
1	Erase setup	
	[Setting condition]	
	When FWE = 1, and SWE = 1	

Bit 0—Program Setup (PSU): Prepares for a transition to program mode. Set this bit to 1 before setting the P bit to 1 in FLMCR1. Do not set the SWE, ESU, EV, PV, E, or P bit at the same time.

Bit 0 PSU	Description	
0	Program setup cleared	(Initial value)
1	Program setup [Setting condition] When FWE = 1, and SWE = 1	

19.7.3 Erase Block Registers 1 and 2 (EBR1, EBR2)

Bit	7	6	5	4	3	2	1	0
EBR1	—	—	—	—	—	—	EB9	EB8
Initial value	0	0	0	0	0	0	0	0
Read/Write	—	—	—	—	—	—	R/W	R/W

Bit	7	6	5	4	3	2	1	0
EBR2	EB7	EB6	EB5	EB4	EB3	EB2	EB1	EB0
Initial value	0	0	0	0	0	0	0	0
Read/Write	R/W	R/W	R/W	R/W	R/W	R/W	R/W	R/W

EBR1 and EBR2 are registers that specify the flash memory erase area block by block; bits 1 and 2 in EBR1 and bits 7 to 0 in EBR2 are readable/writable bits. EBR1 and EBR2 are each initialized to H'00 by a reset, in hardware standby mode and software standby mode, when a low level is input to the FWE pin, and when a high level is input to the FWE pin and the SWE bit in FLMCR1 is not set. When a bit in EBR1 or EBR2 is set, the corresponding block can be erased. Other blocks are erase-protected. Set only one bit in EBR1 or EBR2 (more than one bit cannot be set). When on-chip flash memory is disabled, a read will return H'00, and writes are invalid.

The flash memory block configuration is shown in table 19-12.

Table 19-12 Flash Memory Erase Blocks

Block (Size)	Address
EB0 (1 kbyte)	H'000000 to H'0003FF
EB1 (1 kbyte)	H'000400 to H'0007FF
EB2 (1 kbyte)	H'000800 to H'000BFF
EB3 (1 kbyte)	H'000C00 to H'000FFF
EB4 (28 kbytes)	H'001000 to H'007FFF
EB5 (16 kbytes)	H'008000 to H'00BFFF
EB6 (8 kbytes)	H'00C000 to H'00DFFF
EB7 (8 kbytes)	H'00E000 to H'00FFFF
EB8 (32 kbytes)	H'010000 to H'017FFF
EB9 (32 kbytes)	H'018000 to H'01FFFF

19.7.4 System Control Register 2 (SYSCR2)

Bit	7	6	5	4	3	2	1	0
	—	—	—	—	FLSHE	—	—	—
Initial value	0	0	0	0	0	0	0	0
Read/Write	—	—	—	—	R/W	—	—	—

SYSCR2 is an 8-bit readable/writable register that controls on-chip flash memory (in F-ZTAT versions).

SYSCR2 is initialized to H'00 by a reset and in hardware standby mode.

SYSCR2 is available only in the F-ZTAT version. In the masked ROM and ZTAT versions, this register cannot be written to and will return an undefined value if read.

Bits 7 to 4—Reserved: These bits cannot be modified and are always read as 0.

Bit 3—Flash Memory Control Register Enable (FLSHE): Controls CPU access to the flash memory control registers (FLMCR1, FLMCR2, EBR1, and EBR2). Setting the FLSHE bit to 1 enables read/write access to the flash memory control registers. If FLSHE is cleared to 0, the flash memory control registers are deselected. In this case, the flash memory control register contents are retained.

Bit 3 FLSHE	Description	
0	Flash control registers deselected in area H'FFFFC8 to H'FFFFCB	(Initial value)
1	Flash control registers selected in area H'FFFFC8 to H'FFFFCB	

Bits 2 to 0—Reserved: These bits cannot be modified and are always read as 0.

19.7.5 RAM Emulation Register (RAMER)

RAMER specifies the area of flash memory to be overlapped with part of RAM when emulating real-time flash memory programming. RAMER is initialized to H'00 by a reset and in hardware standby mode. It is not initialized in software standby mode. RAMER settings should be made in user mode or user program mode.

Flash memory area divisions are shown in table 19-13. To ensure correct operation of the emulation function, the ROM for which RAM emulation is performed should not be accessed immediately after this register has been modified. Normal execution of an access immediately after register modification is not guaranteed.

Bit:	7	6	5	4	3	2	1	0
	—	—	—	—	—	RAMS	RAM1	RAM0
Initial value:	0	0	0	0	0	0	0	0
R/W:	—	—	—	—	—	R/W	R/W	R/W

Bits 7 to 3—Reserved: These bits are always read as 0.

Bit 2—RAM Select (RAMS): Specifies selection or non-selection of flash memory emulation in RAM. When RAMS = 1, all flash memory block are program/erase-protected.

Bit 2 RAMS	Description	
0	Emulation not selected Program/erase-protection of all flash memory blocks is disabled	(Initial value)
1	Emulation selected Program/erase-protection of all flash memory blocks is enabled	

Bits 1 and 0—Flash Memory Area Selection (RAM1, RAM0): These bits are used together with bit 2 to select the flash memory area to be overlapped with RAM. (see table 19-13.)

Table 19-13 Flash Memory Area Divisions

Addresses	Block Name	RAMS	RAM1	RAM0
H'FFDC00–H'FFDFFF	RAM area 1 kbyte	0	×	×
H'000000–H'0003FF	EB0 (1 kbyte)	1	0	0
H'000400–H'0007FF	EB1 (1 kbyte)	1	0	1
H'000800–H'000BFF	EB2 (1 kbyte)	1	1	0
H'000C00–H'000FFF	EB3 (1 kbyte)	1	1	1

×: Don't care

19.8 On-Board Programming Modes

When pins are set to on-board programming mode, program/erase/verify operations can be performed on the on-chip flash memory. There are two on-board programming modes: boot mode and user program mode. The pin settings for transition to each of these modes are shown in table 19-14. For a diagram of the transitions to the various flash memory modes, see figure 19-8.

Table 19-14 Setting On-Board Programming Modes

Mode					
Mode Name	**CPU Operating Mode**	**FWE**	**MD_2**	**MD_1**	**MD_0**
Boot mode	Advanced expanded mode with on-chip ROM enabled	1	0	1	0
	Advanced single-chip mode				1
User program mode*	Advanced expanded mode with on-chip ROM enabled	1	1	1	0
	Advanced single-chip mode				1

Note: * Normally, user mode should be used. Set FWE to 1 to make a transition to user program mode before performing a program/erase/verify operation.

19.8.1 Boot Mode

When boot mode is used, the flash memory programming control program must be prepared in the host beforehand. The channel 1 SCI to be used is set to asynchronous mode.

When a reset-start is executed after the H8S/2357 MCU's pins have been set to boot mode, the boot program built into the MCU is started and the programming control program prepared in the host is serially transmitted to the MCU via the SCI. In the MCU, the programming control program received via the SCI is written into the programming control program area in on-chip RAM. After the transfer is completed, control branches to the start address of the programming control program area and the programming control program execution state is entered (flash memory programming is performed).

The transferred programming control program must therefore include coding that follows the programming algorithm given later.

The system configuration in boot mode is shown in figure 19-14, and the boot program mode execution procedure in figure 19-15.

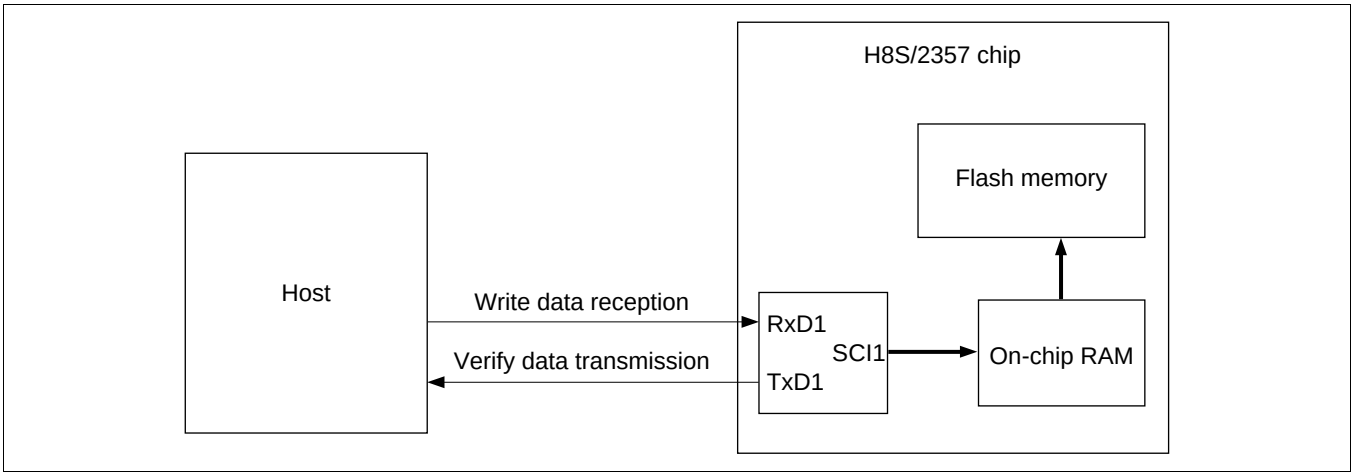

Figure 19-14 System Configuration in Boot Mode

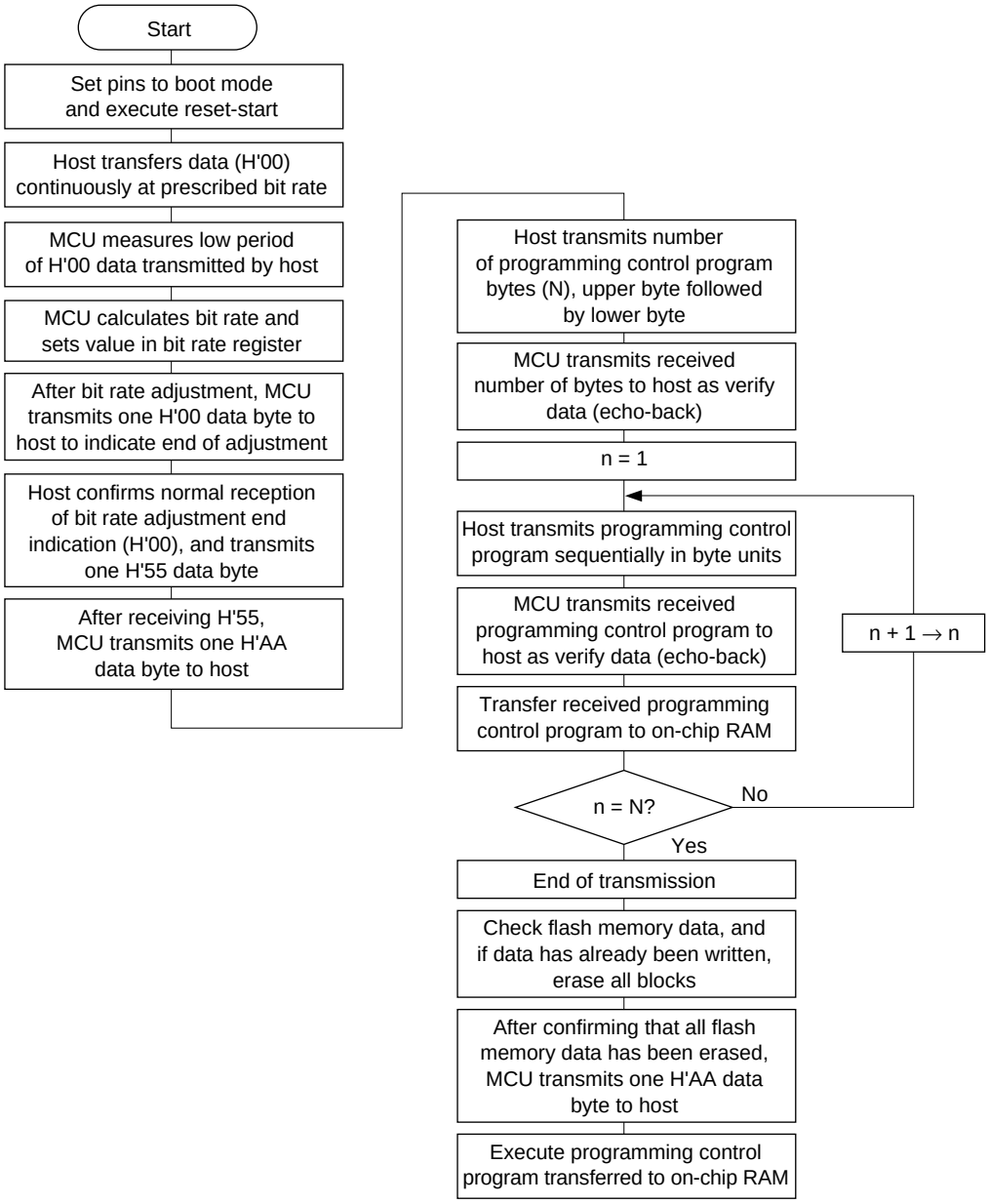

Note: If a memory cell does not operate normally and cannot be erased, one H'FF byte is transmitted as an erase error, and the erase operation and subsequent operations are halted.

Figure 19-15 Boot Mode Execution Procedure

Automatic SCI Bit Rate Adjustment

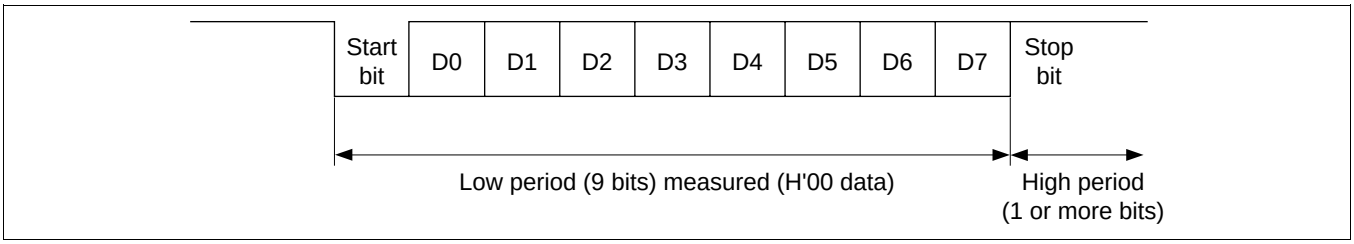

Figure 19-16 Automatic SCI Bit Rate Adjustment

When boot mode is initiated, the H8S/2357 MCU measures the low period of the asynchronous SCI communication data (H'00) transmitted continuously from the host. The SCI transmit/receive format should be set as follows: 8-bit data, 1 stop bit, no parity. The MCU calculates the bit rate of the transmission from the host from the measured low period, and transmits one H'00 byte to the host to indicate the end of bit rate adjustment. The host should confirm that this adjustment end indication (H'00) has been received normally, and transmit one H'55 byte to the MCU. If reception cannot be performed normally, initiate boot mode again (reset), and repeat the above operations. Depending on the host's transmission bit rate and the MCU's system clock frequency, there will be a discrepancy between the bit rates of the host and the MCU. To ensure correct SCI operation, the host's transfer bit rate should be set to (4,800, or 9,600) bps.

Table 19-15 shows typical host transfer bit rates and system clock frequencies for which automatic adjustment of the MCU's bit rate is possible. The boot program should be executed within this system clock range.

Table 19-15 System Clock Frequencies for which Automatic Adjustment of H8S/2357 Bit Rate is Possible

Host Bit Rate	System Clock Frequency for which Automatic Adjustment of H8S/2357 Bit Rate is Possible
9600 bps	8 to 20 MHz
4800 bps	4 to 20 MHz

On-Chip RAM Area Divisions in Boot Mode: In boot mode, the 2 kbytes area from H'FFDC00 to H'FFE3FF is reserved for use by the boot program, as shown in figure 19-17. The area to which the programming control program is transferred is H'FFE400 to H'FFFB7F. The boot program area can be used when the programming control program transferred into RAM enters the execution state. A stack area should be set up as required.

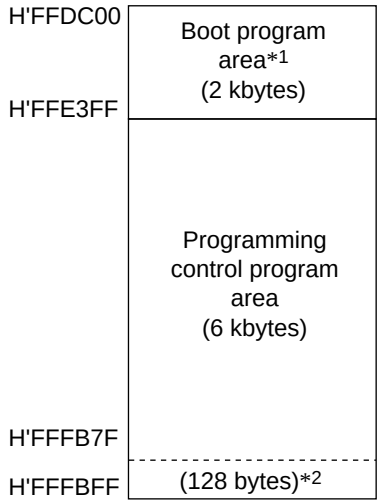

Notes: 1. The boot program area cannot be used until a transition is made to the execution state for the programming control program transferred to RAM. Note that the boot program remains stored in this area after a branch is made to the programming control program.
2. The area from H'FFFB80 to H'FFFBFF (128 bytes) is used by the boot program.
The area from H'FFE400 to H'FFFB7F can be used by the programming control program.

Figure 19-17 RAM Areas in Boot Mode

Notes on Use of User Mode:

- When the chip comes out of reset in boot mode, it measures the low-level period of the input at the SCI's RxD1 pin. The reset should end with RxD1 high. After the reset ends, it takes approximately 100 states before the chip is ready to measure the low-level period of the RxD1 pin.

- In boot mode, if any data has been programmed into the flash memory (if all data is not 1), all flash memory blocks are erased. Boot mode is for use when user program mode is unavailable, such as the first time on-board programming is performed, or if the program activated in user program mode is accidentally erased.

- Interrupts cannot be used while the flash memory is being programmed or erased.

- The RxD1 and TxD1 pins should be pulled up on the board.

- Before branching to the programming control program (RAM area H'FFE400), the chip terminates transmit and receive operations by the on-chip SCI (channel 1) (by clearing the RE and TE bits in SCR to 0), but the adjusted bit rate value remains set in BRR. The transmit data output pin, TxD1, goes to the high-level output state (P31DDR = 1, P31DR = 1).

  The contents of the CPU's internal general registers are undefined at this time, so these registers must be initialized immediately after branching to the programming control program. In particular, since the stack pointer (SP) is used implicitly in subroutine calls, etc., a stack area must be specified for use by the programming control program.

  Initial settings must also be made for the other on-chip registers.

- Boot mode can be entered by making the pin settings shown in table 19-14 and executing a reset-start.

  Boot mode can be cleared by driving the reset pin low, waiting at least 20 states, then setting the FWE pin and mode pins, and executing reset release*[1]. Boot mode can also be cleared by a WDT overflow reset.

  Do not change the mode pin input levels in boot mode, and do not drive the FWE pin low while the boot program is being executed or while flash memory is being programmed or erased*[2].

- If the mode pin input levels are changed (for example, from low to high) during a reset, the state of ports with multiplexed address functions and bus control output pins ($\overline{AS}$, $\overline{RD}$, $\overline{HWR}$) will change according to the change in the microcomputer's operating mode*[3].

  Therefore, care must be taken to make pin settings to prevent these pins from becoming output signal pins during a reset, or to prevent collision with signals outside the microcomputer.

Notes: 1. Mode pins and FWE pin input must satisfy the mode programming setup time (t_{MDS} = 200 ns) with respect to the reset release timing, as shown in figures 19-33 to 19-35.
2. For further information on FWE application and disconnection, see section 19.14, Flash Memory Programming and Erasing Precautions.
3. See Appendix D, Pin States.

19.8.2 User Program Mode

When set to user program mode, the chip can program and erase its flash memory by executing a user program/erase control program. Therefore, on-board reprogramming of the on-chip flash memory can be carried out by providing on-board means of FWE control and supply of programming data, and storing a program/erase control program in part of the program area as necessary.

To select user program mode, select a mode that enables the on-chip flash memory (mode 6 or 7), and apply a high level to the FWE pin. In this mode, on-chip supporting modules other than flash memory operate as they normally would in modes 6 and 7.

The flash memory itself cannot be read while the SWE bit is set to 1 to perform programming or erasing, so the control program that performs programming and erasing should be run in on-chip RAM or external memory.

Figure 19-18 shows the procedure for executing the program/erase control program when transferred to on-chip RAM.

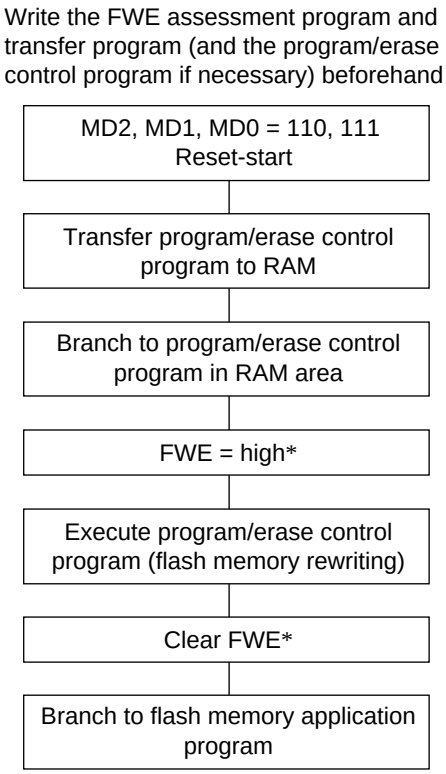

Notes: Do not apply a constant high level to the FWE pin. Apply a high level to the FWE pin only when the flash memory is programmed or erased. Also, while a high level is applied to the FWE pin, the watchdog timer should be activated to prevent overprogramming or overerasing due to program runaway, etc.

* For further information on FWE application and disconnection, see section 19.14, Flash Memory Programming and Erasing Precautions.

Figure 19-18 User Program Mode Execution Procedure

19.9 Programming/Erasing Flash Memory

In the on-board programming modes, flash memory programming and erasing is performed by software, using the CPU. There are four flash memory operating modes: program mode, erase mode, program-verify mode, and erase-verify mode. Transitions to these modes can be made by setting the PSU and ESU bits in FLMCR2, and the P, E, PV, and EV bits in FLMCR1.

The flash memory cannot be read while being programmed or erased. Therefore, the program that controls flash memory programming/erasing (the programming control program) should be located and executed in on-chip RAM or external memory.

Notes: 1. Operation is not guaranteed if setting/resetting of the SWE, EV, PV, E, and P bits in FLMCR1, and the ESU and PSU bits in FLMCR2, is executed by a program in flash memory.
2. When programming or erasing, set FWE to 1 (programming/erasing will not be executed if FWE = 0).
3. Perform programming in the erased state. Do not perform additional programming on previously programmed addresses.

19.9.1 Program Mode

Follow the procedure shown in the program/program-verify flowchart in figure 19-19 to write data or programs to flash memory. Performing program operations according to this flowchart will enable data or programs to be written to flash memory without subjecting the device to voltage stress or sacrificing program data reliability. Programming should be carried out 32 bytes at a time.

The wait times (x, y, z, α, ß, γ, ε, η) after bits are set or cleared in flash memory control registers 1 and 2 (FLMCR1, FLMCR2) and the maximum number of programming operations (N) are shown in table 22.42 in section 22.7.6, Flash Memory Characteristics.

Following the elapse of (x) μs or more after the SWE bit is set to 1 in flash memory control register 1 (FLMCR1), 32-byte program data is stored in the program data area and reprogram data area, and the 32-byte data in the reprogram data area written consecutively to the write addresses. The lower 8 bits of the first address written to must be H'00, H'20, H'40, H'60, H'80, H'A0, H'C0, or H'E0. Thirty-two consecutive byte data transfers are performed. The program address and program data are latched in the flash memory. A 32-byte data transfer must be performed even if writing fewer than 32 bytes; in this case, H'FF data must be written to the extra addresses.

Next, the watchdog timer is set to prevent overprogramming in the event of program runaway, etc. Set a value greater than (y + z + α + ß) μs as the WDT overflow period. After this, preparation for program mode (program setup) is carried out by setting the PSU bit in FLMCR2, and after the elapse of (y) μs or more, the operating mode is switched to program mode by setting the P bit in FLMCR1. The time during which the P bit is set is the flash memory programming time. Make a program setting so that the time for one programming operation is within the range of (z) μs.

19.9.2 Program-Verify Mode

In program-verify mode, the data written in program mode is read to check whether it has been correctly written in the flash memory.

After the elapse of a given programming time, the programming mode is exited (the P bit in FLMCR1 is cleared to 0, then the PSU bit in FLMCR2 is cleared to 0 at least (α) μs later). Next, the watchdog timer is cleared after the elapse of (β) μs or more, and the operating mode is switched to program-verify mode by setting the PV bit in FLMCR1. Before reading in program-verify mode, a dummy write of H'FF data should be made to the addresses to be read. The dummy write should be executed after the elapse of (γ) μs or more. When the flash memory is read in this state (verify data is read in 16-bit units), the data at the latched address is read. Wait at least (ε) μs after the dummy write before performing this read operation. Next, the originally written data is compared with the verify data, and reprogram data is computed (see figure

19-19) and transferred to the reprogram data area. After 32 bytes of data have been verified, exit program-verify mode, wait for at least (η) µs, then clear the SWE bit in FLMCR1 to 0. If reprogramming is necessary, set program mode again, and repeat the program/program-verify sequence as before. However, ensure that the program/program-verify sequence is not repeated more than (N) times on the same bits.

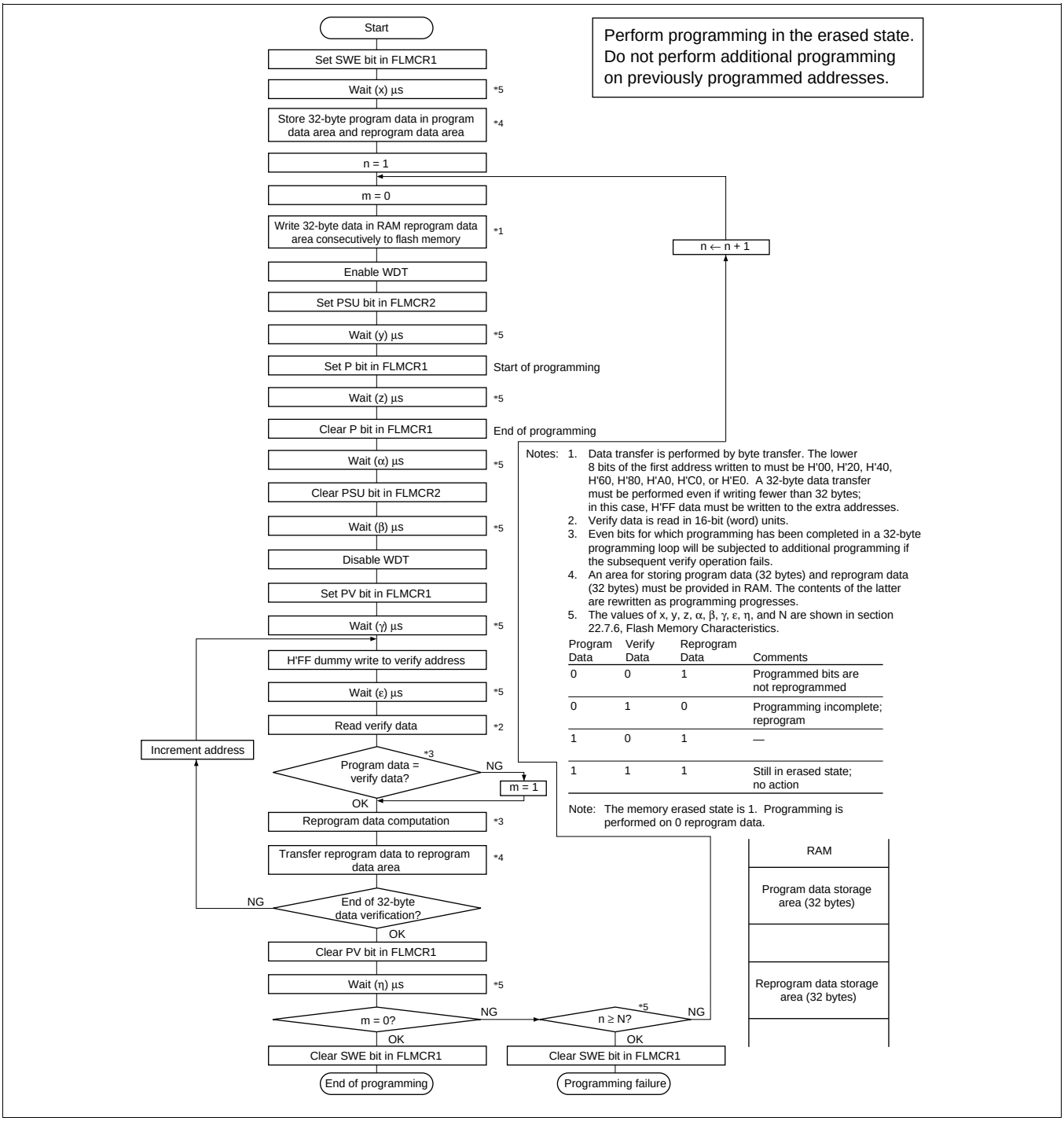

Figure 19-19 Program/Program-Verify Flowchart

19.9.3 Erase Mode

Flash memory erasing should be performed block by block following the procedure shown in the erase/erase-verify flowchart (single-block erase) shown in figure 19-20.

The wait times (x, y, z, α, ß, γ, ε, η) after bits are set or cleared in flash memory control registers 1 and 2 (FLMCR1, FLMCR2) and the maximum number of programming operations (N) are shown in table 22.42 in section 22.7.6, Flash Memory Characteristics.

To perform data or program erasure, make a 1 bit setting for the flash memory area to be erased in erase block register 1 or 2 (EBR1 or EBR2) at least (x) μs after setting the SWE bit to 1 in flash memory control register 1 (FLMCR1). Next, the watchdog timer is set to prevent overerasing in the event of program runaway, etc. Set a value greater than (y + z + α + ß) μs as the WDT overflow period. After this, preparation for erase mode (erase setup) is carried out by setting the ESU bit in FLMCR2, and after the elapse of (y) μs or more, the operating mode is switched to erase mode by setting the E bit in FLMCR1. The time during which the E bit is set is the flash memory erase time. Ensure that the erase time does not exceed (z) ms.

Note: With flash memory erasing, preprogramming (setting all data in the memory to be erased to 0) is not necessary before starting the erase procedure.

19.9.4 Erase-Verify Mode

In erase-verify mode, data is read after memory has been erased to check whether it has been correctly erased.

After the elapse of the erase time, erase mode is exited (the E bit in FLMCR1 is cleared to 0, then the ESU bit in FLMCR2 is cleared to 0 at least (α) μs later), the watchdog timer is cleared after the elapse of (β) μs or more, and the operating mode is switched to erase-verify mode by setting the EV bit in FLMCR1. Before reading in erase-verify mode, a dummy write of H'FF data should be made to the addresses to be read. The dummy write should be executed after the elapse of (γ) μs or more. When the flash memory is read in this state (verify data is read in 16-bit units), the data at the latched address is read. Wait at least (ε) μs after the dummy write before performing this read operation. If the read data has been erased (all 1), a dummy write is performed to the next address, and erase-verify is performed. If the read data has not been erased, set erase mode again, and repeat the erase/erase-verify sequence in the same way. However, ensure that the erase/erase-verify sequence is not repeated more than (N) times. When verification is completed, exit erase-verify mode, and wait for at least (η) μs. If erasure has been completed on all the erase blocks, clear the SWE bit in FLMCR1 to 0. If there are any unerased blocks, make a 1 bit setting in EBR1 or EBR2 for the flash memory area to be erased, and repeat the erase/erase-verify sequence in the same way.

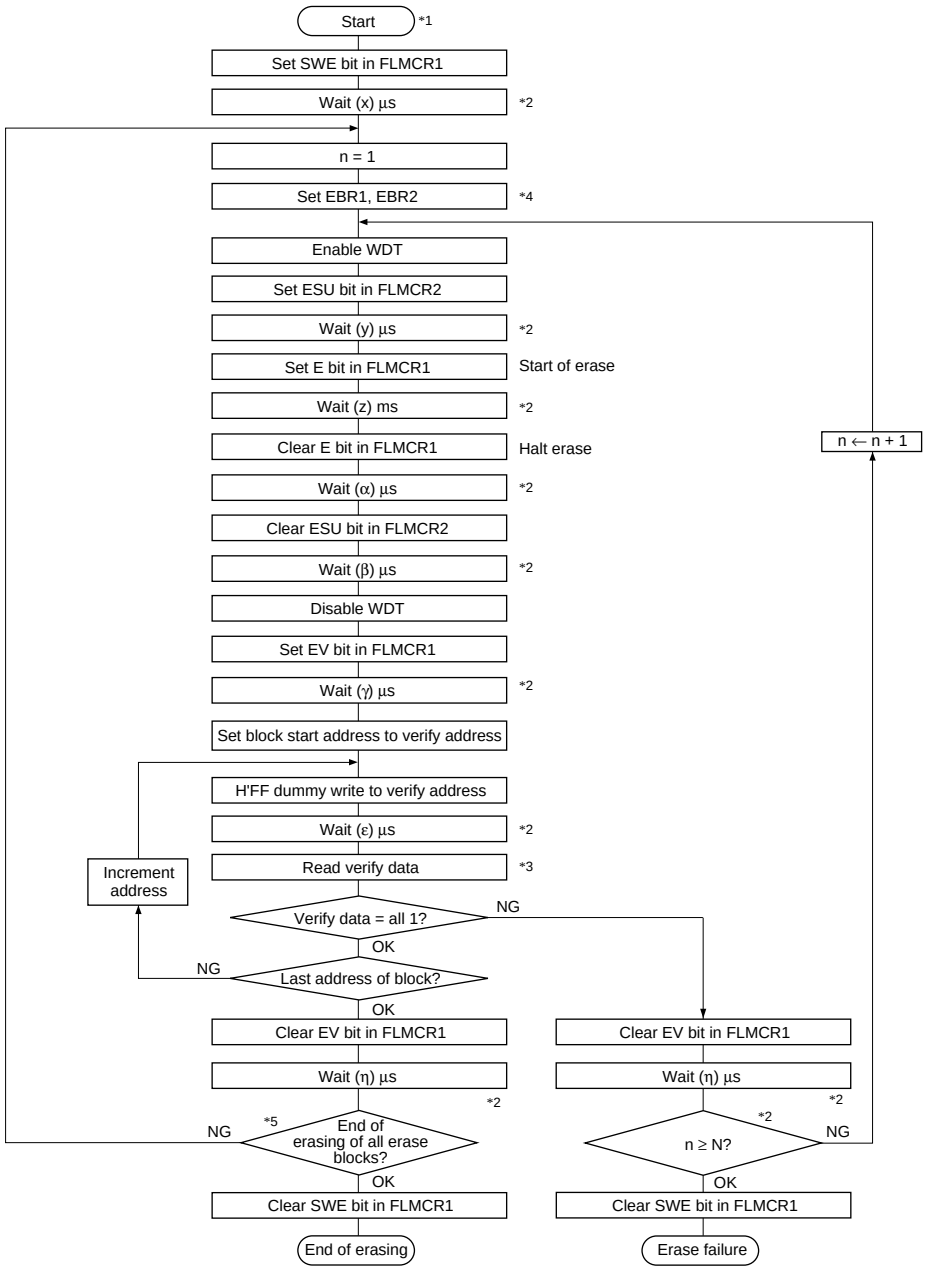

Notes: 1. Preprogramming (setting erase block data to all 0) is not necessary.
2. The values of x, y, z, α, β, γ, ε, η, and N are shown in section 22.7.6, Flash Memory Characteristics.
3. Verify data is read in 16-bit (W) units.
4. Set only one bit in EBR1or EBR2. More than one bit cannot be set.
5. Erasing is performed in block units. To erase a number of blocks, the individual blocks must be erased sequentially.

Figure 19-20 Erase/Erase-Verify Flowchart (Single-Block Erase)

19.10 Flash Memory Protection

There are three kinds of flash memory program/erase protection: hardware protection, software protection, and error protection.

19.10.1 Hardware Protection

Hardware protection refers to a state in which programming/erasing of flash memory is forcibly disabled or aborted. Hardware protection is reset by settings in flash memory control registers 1 and 2 (FLMCR1, FLMCR2) and erase block registers 1 and 2 (EBR1, EBR2). (See table 19-16.)

Table 19-16 Hardware Protection

		Functions	
Item	**Description**	**Program**	**Erase**
FWE pin protection	• When a low level is input to the FWE pin, FLMCR1, FLMCR2 (excluding the FLER bit), EBR1, and EBR2 are initialized, and the program/erase-protected state is entered.	Yes	Yes
Reset/standby protection	• In a reset (including a WDT overflow reset) and in standby mode, FLMCR1, FLMCR2, EBR1, and EBR2 are initialized, and the program/erase-protected state is entered. • In a reset via the $\overline{\text{RES}}$ pin, the reset state is not entered unless the $\overline{\text{RES}}$ pin is held low until oscillation stabilizes after powering on. In the case of a reset during operation, hold the $\overline{\text{RES}}$ pin low for the $\overline{\text{RES}}$ pulse width specified in the AC Characteristics section.	Yes	Yes

19.10.2 Software Protection

Software protection can be implemented by setting the SWE bit in FLMCR1, erase block registers 1 and 2 (EBR1, EBR2), and the RAMS bit in RAMER. When software protection is in effect, setting the P or E bit in flash memory control register 1 (FLMCR1) does not cause a transition to program mode or erase mode. (See table 19-17.)

Table 19-17 Software Protection

Item	Description	Functions	
		Program	Erase
SWE bit protection	• Clearing the SWE bit to 0 in FLMCR1 sets the program/erase-protected state for all blocks. (Execute in on-chip RAM or external memory.)	Yes	Yes
Block specification protection	• Erase protection can be set for individual blocks by settings in erase block registers 1 and 2 (EBR1, EBR2). • Setting EBR1 and EBR2 to H'00 places all blocks in the erase-protected state.	—	Yes
Emulation protection	• Setting the RAMS bit to 1 in the RAM emulation register (RAMER) places all blocks in the program/erase-protected state.	Yes	Yes

19.10.3 Error Protection

In error protection, an error is detected when MCU runaway occurs during flash memory programming/erasing, or operation is not performed in accordance with the program/erase algorithm, and the program/erase operation is aborted. Aborting the program/erase operation prevents damage to the flash memory due to overprogramming or overerasing.

If the MCU malfunctions during flash memory programming/erasing, the FLER bit is set to 1 in FLMCR2 and the error protection state is entered. The FLMCR1, FLMCR2, EBR1, and EBR2 settings are retained, but program mode or erase mode is aborted at the point at which the error occurred. Program mode or erase mode cannot be re-entered by re-setting the P or E bit. However, PV and EV bit setting is enabled, and a transition can be made to verify mode.

FLER bit setting conditions are as follows:

- When flash memory is read during programming/erasing (including a vector read or instruction fetch)
- Immediately after exception handling (excluding a reset) during programming/erasing
- When a SLEEP instruction (including software standby) is executed during programming/erasing
- When the CPU loses the bus during programming/erasing

Error protection is released only by a reset and in hardware standby mode.

Figure 19-21 shows the flash memory state transition diagram.

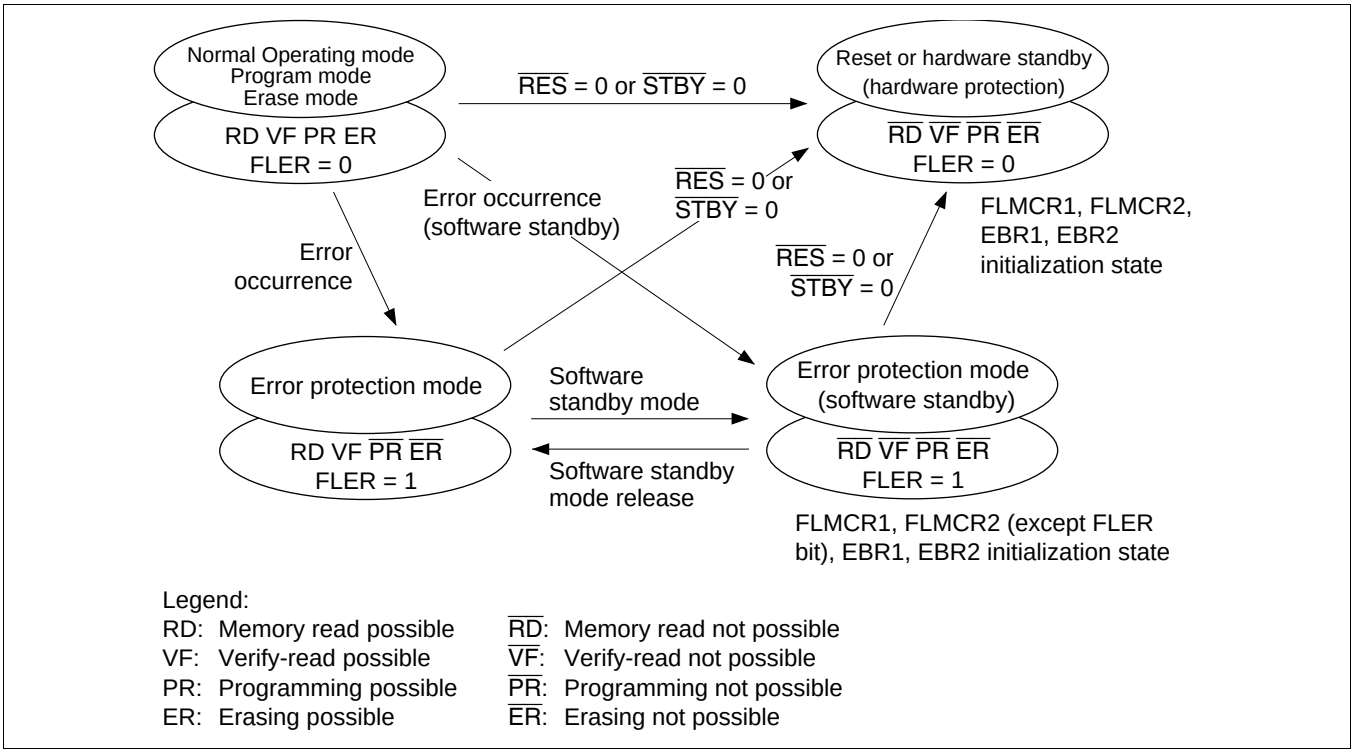

Figure 19-21 Flash Memory State Transitions

19.11 Flash Memory Emulation in RAM

19.11.1 Emulation in RAM

Making a setting in the RAM emulation register (RAMER) enables part of RAM to be overlapped onto the flash memory area so that data to be written to flash memory can be emulated in RAM in real time. After the RAMER setting has been made, accesses can be made from the flash memory area or the RAM area overlapping flash memory. Emulation can be performed in user mode and user program mode. Figure 19-22 shows an example of emulation of real-time flash memory programming.

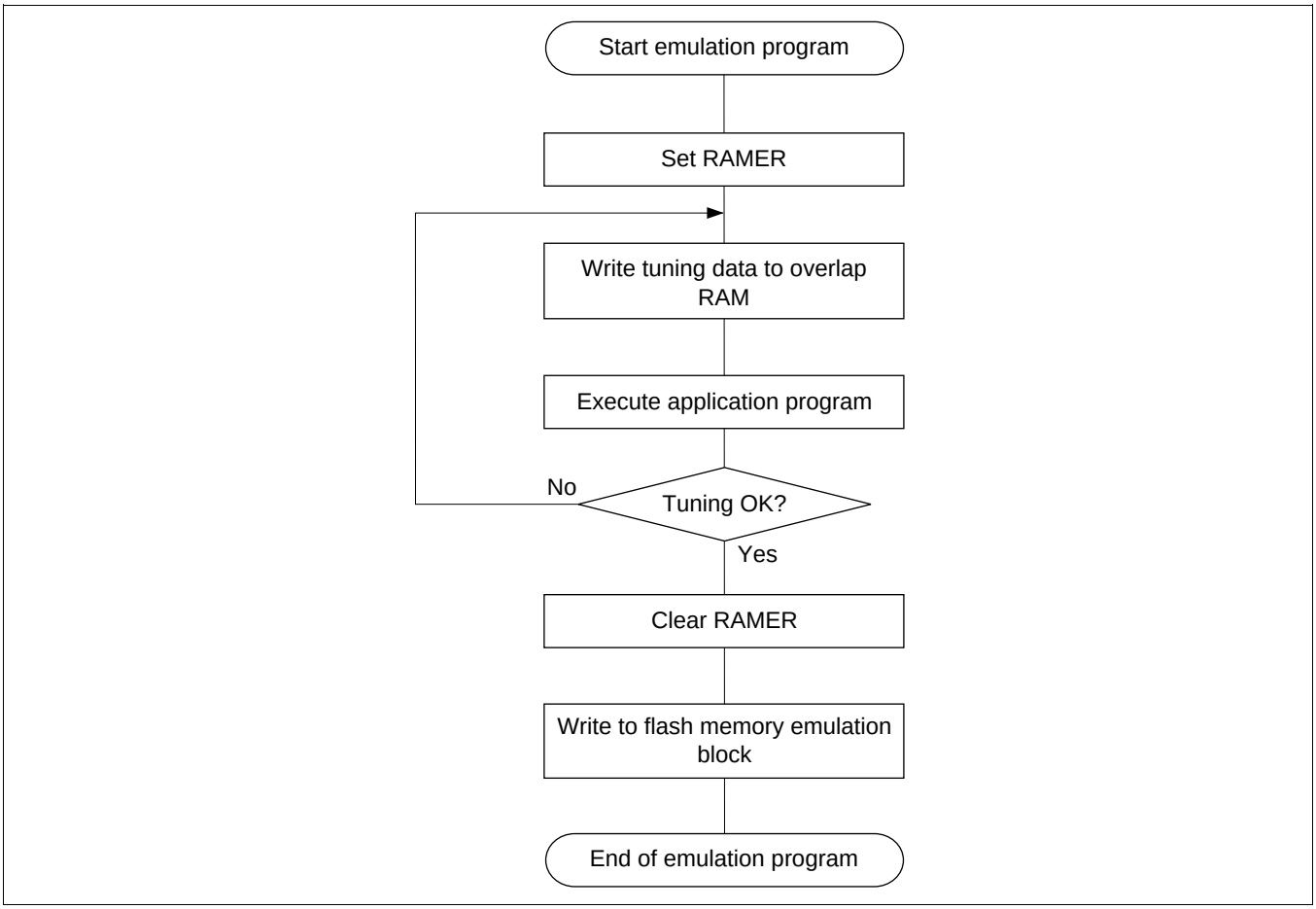

Figure 19-22 Flowchart for Flash Memory Emulation in RAM

19.11.2 RAM Overlap

An example in which flash memory block area EB1 is overlapped is shown below.

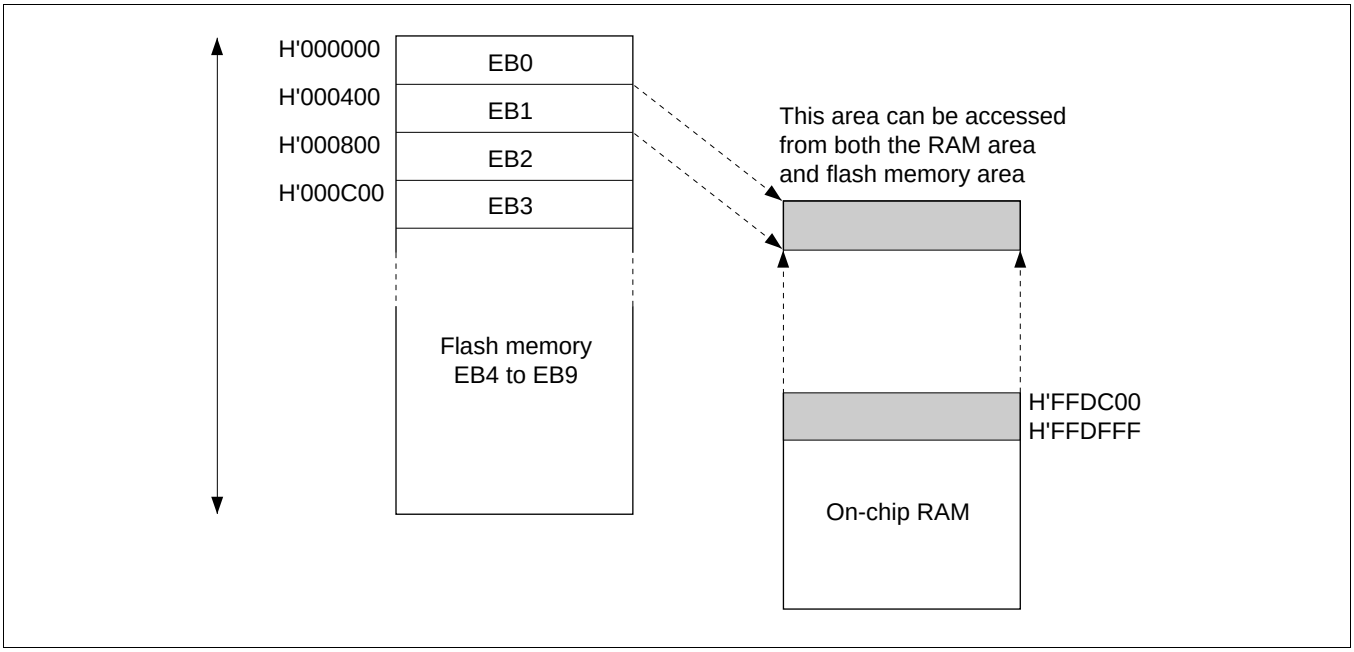

Figure 19.23 Example of RAM Overlap Operation

Example in Which Flash Memory Block Area (EB1) is Overlapped

1. Set bits RAMS, RAM1, and RAM0 in RAMER to 1, 0, 1, to overlap part of RAM onto the area (EB1) for which real-time programming is required.
2. Real-time programming is performed using the overlapping RAM.
3. After the program data has been confirmed, the RAMS bit is cleared, releasing RAM overlap.
4. The data written in the overlapping RAM is written into the flash memory space (EB1).

Notes: 1. When the RAMS bit is set to 1, program/erase protection is enabled for all blocks regardless of the value of RAM1 and RAM0 (emulation protection). In this state, setting the P or E bit in flash memory control register 1 (FLMCR1) will not cause a transition to program mode or erase mode. When actually programming a flash memory area, the RAMS bit should be cleared to 0.

2. A RAM area cannot be erased by execution of software in accordance with the erase algorithm while flash memory emulation in RAM is being used.
3. Block area EB0 includes the vector table. When performing RAM emulation, the vector table is needed by the overlap RAM.

19.12 Interrupt Handling when Programming/Erasing Flash Memory

All interrupts, including NMI interrupt is disabled when flash memory is being programmed or erased (when the P or E bit is set in FLMCR1), and while the boot program is executing in boot mode*[1], to give priority to the program or erase operation. There are three reasons for this:

1. Interrupt during programming or erasing might cause a violation of the programming or erasing algorithm, with the result that normal operation could not be assured.
2. In the interrupt exception handling sequence during programming or erasing, the vector would not be read correctly*[2], possibly resulting in MCU runaway.
3. If interrupt occurred during boot program execution, it would not be possible to execute the normal boot mode sequence.

For these reasons, in on-board programming mode alone there are conditions for disabling interrupt, as an exception to the general rule. However, this provision does not guarantee normal erasing and programming or MCU operation. All requests, including NMI interrupt, must therefore be restricted inside and outside the MCU when programming or erasing flash memory. NMI interrupt is also disabled in the error-protection state while the P or E bit remains set in FLMCR1.

Notes: 1. Interrupt requests must be disabled inside and outside the MCU until the programming control program has completed programming.

2. The vector may not be read correctly in this case for the following two reasons:
   - If flash memory is read while being programmed or erased (while the P or E bit is set in FLMCR1), correct read data will not be obtained (undetermined values will be returned).
   - If the interrupt entry in the vector table has not been programmed yet, interrupt exception handling will not be executed correctly.

19.13 Flash Memory Programmer Mode

19.13.1 Programmer Mode Setting

Programs and data can be written and erased in programmer mode as well as in the on-board programming modes. In programmer mode, the on-chip ROM can be freely programmed using a PROM programmer that supports Renesas Technology microcomputer device types with 128-kbyte on-chip flash memory. Flash memory read mode, auto-program mode, auto-erase mode, and status read mode are supported with this device type. In auto-program mode, auto-erase mode, and status read mode, a status polling procedure is used, and in status read mode, detailed internal signals are output after execution of an auto-program or auto-erase operation.

Table 19-18 shows programmer mode pin settings.

Table 19-18 Programmer Mode Pin Settings

Pin Names	Settings/External Circuit Connection
Mode pins: MD_2, MD_1, MD_0	Low-level input
Mode setting pins: P66, P65, P64	High-level input to P66, low-level input to P65 and P64
FWE pin	High-level input (in auto-program and auto-erase modes)
$\overline{STBY}$ pin	High-level input (do not select hardware standby mode)
$\overline{RES}$ pin	Power-on reset circuit
XTAL, EXTAL pins	Oscillator circuit
Other pins requiring setting: P51, P25	High-level input to P51 and P25

19.13.2 Socket Adapters and Memory Map

In programmer mode, a socket adapter is mounted on the PROM programmer to match the package concerned. Socket adapters are available for each writer manufacturer supporting the Renesas Technology microcomputer device type with 128-kbyte on-chip flash memory.

Figure 19-24 shows the memory map in programmer mode. For pin names in programmer mode, see section 1.3.2, Pin Functions in Each Operating Mode.

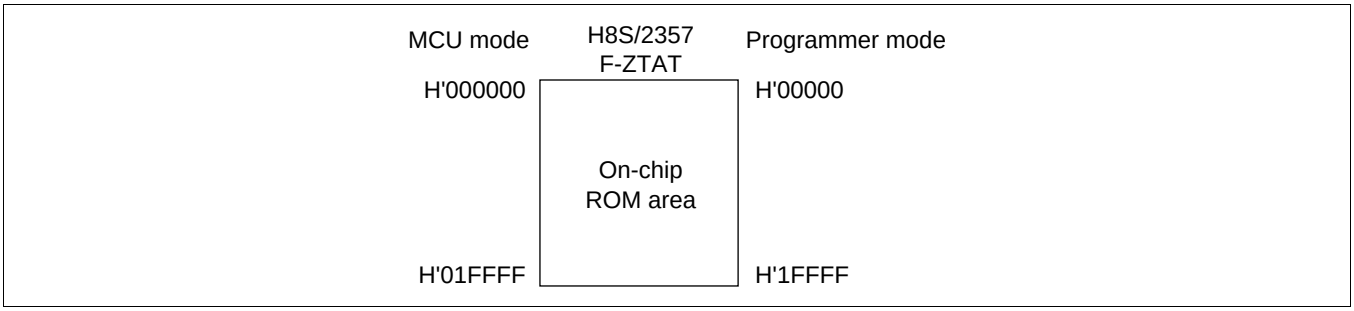

Figure 19-24 Memory Map in Programmer Mode

19.13.3 Programmer Mode Operation

Table 19-19 shows how the different operating modes are set when using programmer mode, and table 19-20 lists the commands used in programmer mode. Details of each mode are given below.

- Memory Read Mode

  Memory read mode supports byte reads.
- Auto-Program Mode

  Auto-program mode supports programming of 128 bytes at a time. Status polling is used to confirm the end of auto-programming.
- Auto-Erase Mode

  Auto-erase mode supports automatic erasing of the entire flash memory. Status polling is used to confirm the end of auto-erasing.
- Status Read Mode

  Status polling is used for auto-programming and auto-erasing, and normal termination can be confirmed by reading the I/O_6 signal. In status read mode, error information is output if an error occurs.

Table 19-19 Settings for Each Operating Mode in Programmer Mode

	Pin Names					
Mode	**FWE**	**$\overline{CE}$**	**$\overline{OE}$**	**$\overline{WE}$**	**I/O0 to I/O7**	**A0 to A16**
Read	H or L	L	L	H	Data output	Ain
Output disable	H or L	L	H	H	Hi-Z	×
Command write	H or L*3	L	H	L	Data input	Ain*2
Chip disable*1	H or L	H	×	×	Hi-Z	×

Legend:
H: High level
L: Low level
Hi-Z: High impedance
×: Don't care

Notes: *1 Chip disable is not a standby state; internally, it is an operation state.
*2 Ain indicates that there is also address input in auto-program mode.
*3 For command writes when making a transition to auto-program or auto-erase mode, input a high level to the FWE pin.

Table 19-20 Programmer Mode Commands

Command Name	Number of Cycles	1st Cycle			2nd Cycle		
		Mode	Address	Data	Mode	Address	Data
Memory read mode	1 + n	Write	×	H'00	Read	RA	Dout
Auto-program mode	129	Write	×	H'40	Write	PA	Din
Auto-erase mode	2	Write	×	H'20	Write	×	H'20
Status read mode	2	Write	×	H'71	Write	×	H'71

Legend:
RA: Read address
PA: Program address
×: Don't care

Notes: 1. In auto-program mode. 129 cycles are required for command writing by a simultaneous 128-byte write.
2. In memory read mode, the number of cycles depends on the number of address write cycles (n).

19.13.4 Memory Read Mode

- After the end of an auto-program, auto-erase, or status read operation, the command wait state is entered. To read memory contents, a transition must be made to memory read mode by means of a command write before the read is executed.
- Command writes can be performed in memory read mode, just as in the command wait state.
- Once memory read mode has been entered, consecutive reads can be performed.
- After power-on, memory read mode is entered.

Table 19-21 AC Characteristics in Memory Read Mode

Conditions: V_{CC} = 5.0 V ±10%, V_{SS} = 0 V, T_a = 25°C ±5°C

Item	Symbol	Min	Max	Unit
Command write cycle	t_{nxtc}	20	—	µs
$\overline{CE}$ hold time	t_{ceh}	0	—	ns
$\overline{CE}$ setup time	t_{ces}	0	—	ns
Data hold time	t_{dh}	50	—	ns
Data setup time	t_{ds}	50	—	ns
Write pulse width	t_{wep}	70	—	ns
$\overline{WE}$ rise time	t_r	—	30	ns
$\overline{WE}$ fall time	t_f	—	30	ns

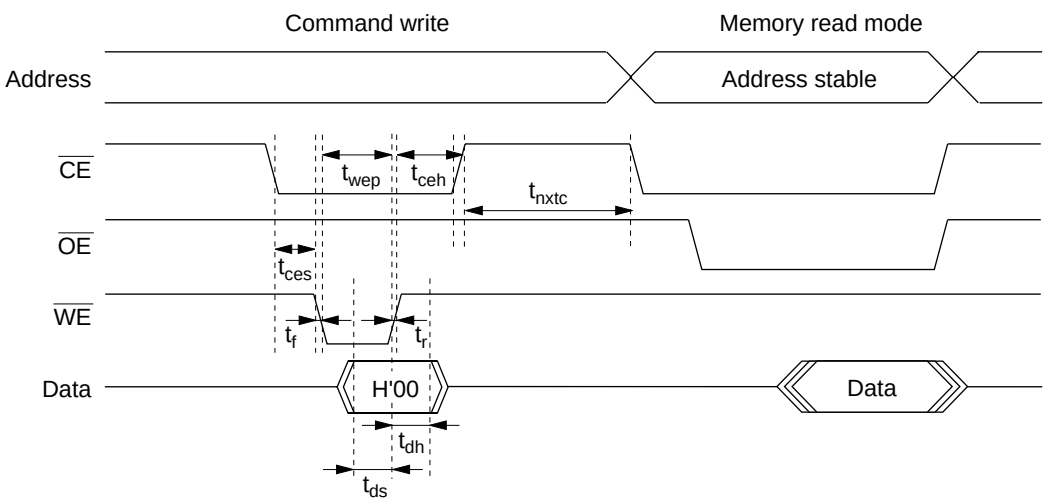

Note: Data is latched on the rising edge of $\overline{WE}$.

Figure 19-25 Memory Read Mode Timing Waveforms after Command Write

Table 19-22 AC Characteristics when Entering Another Mode from Memory Read Mode

Conditions: V_{CC} = 5.0 V ±10%, V_{SS} = 0 V, T_a = 25°C ±5°C

Item	Symbol	Min	Max	Unit
Command write cycle	t_{nxtc}	20	—	µs
$\overline{CE}$ hold time	t_{ceh}	0	—	ns
$\overline{CE}$ setup time	t_{ces}	0	—	ns
Data hold time	t_{dh}	50	—	ns
Data setup time	t_{ds}	50	—	ns
Write pulse width	t_{wep}	70	—	ns
$\overline{WE}$ rise time	t_r	—	30	ns
$\overline{WE}$ fall time	t_f	—	30	ns

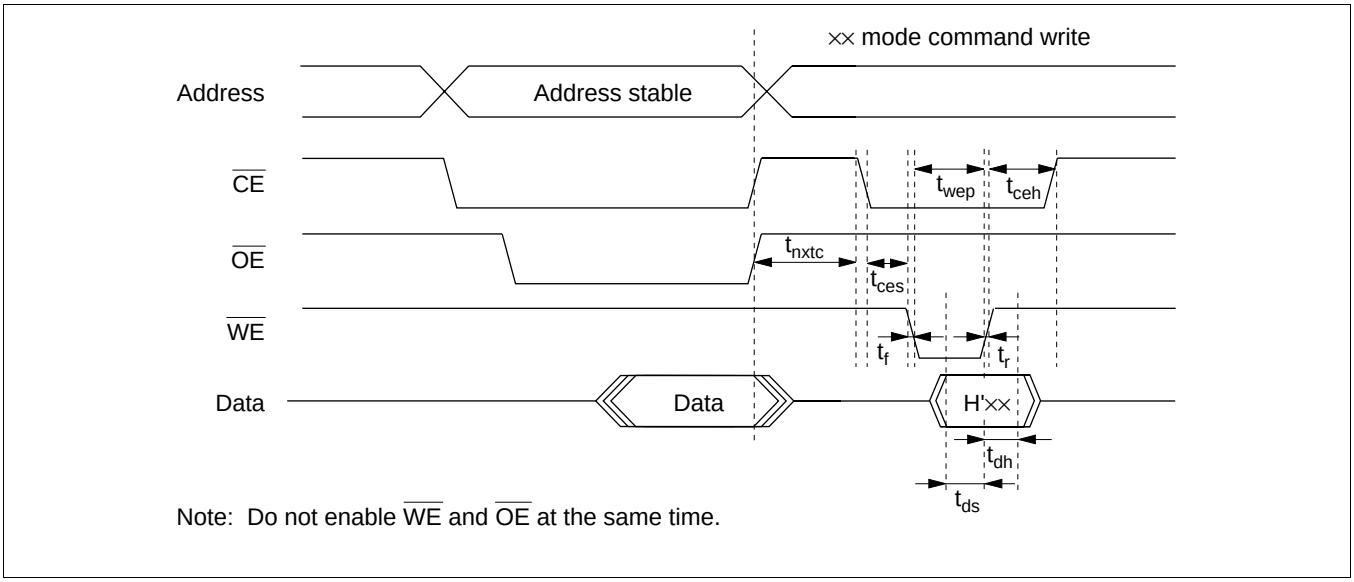

Figure 19-26 Timing Waveforms when Entering Another Mode from Memory Read Mode

Table 19-23 AC Characteristics in Memory Read Mode

Conditions: V_{CC} = 5.0 V ±10%, V_{SS} = 0 V, T_a = 25°C ±5°C

Item	Symbol	Min	Max	Unit
Access time	t_{acc}	—	20	µs
$\overline{CE}$ output delay time	t_{ce}	—	150	ns
$\overline{OE}$ output delay time	t_{oe}	—	150	ns
Output disable delay time	t_{df}	—	100	ns
Data output hold time	t_{oh}	5	—	ns

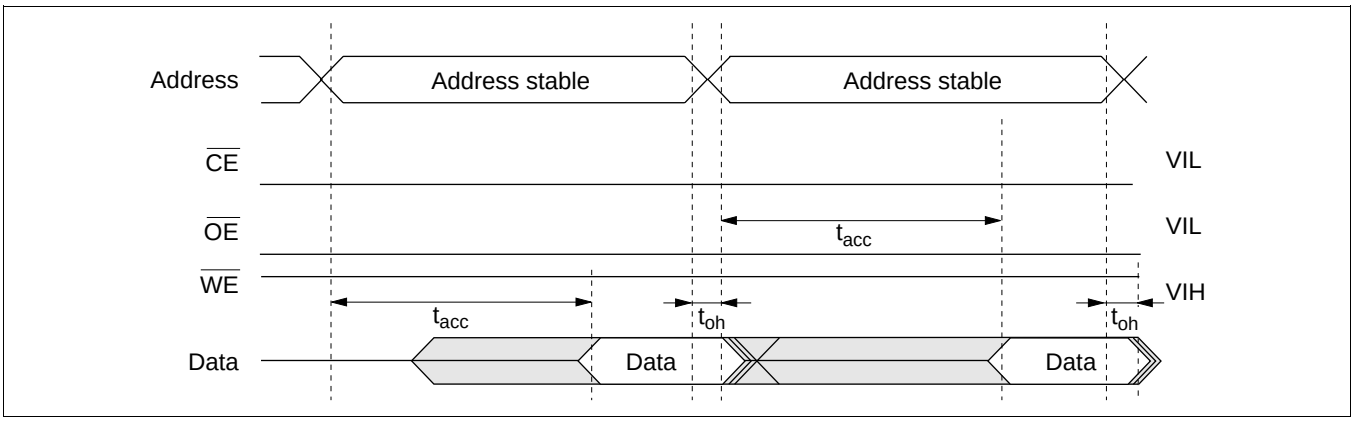

Figure 19-27 Timing Waveforms for $\overline{CE}$/$\overline{OE}$ Enable State Read

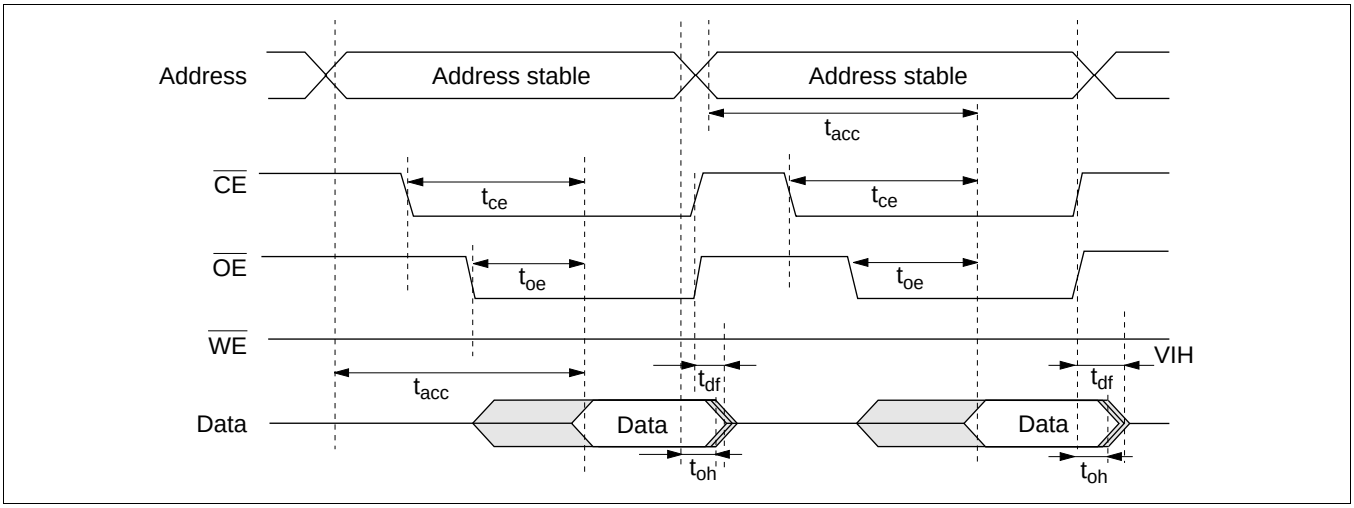

Figure 19-28 Timing Waveforms for $\overline{CE}$/$\overline{OE}$ Clocked Read

19.13.5 Auto-Program Mode

AC Characteristics

Table 19-24 AC Characteristics in Auto-Program Mode

Conditions: V_{CC} = 5.0 V ±10%, V_{SS} = 0 V, T_a = 25°C ±5°C

Item	Symbol	Min	Max	Unit
Command write cycle	t_{nxtc}	20	—	µs
$\overline{CE}$ hold time	t_{ceh}	0	—	ns
$\overline{CE}$ setup time	t_{ces}	0	—	ns
Data hold time	t_{dh}	50	—	ns
Data setup time	t_{ds}	50	—	ns
Write pulse width	t_{wep}	70	—	ns
Status polling start time	t_{wsts}	1	—	ms
Status polling access time	t_{spa}	—	150	ns
Address setup time	t_{as}	0	—	ns
Address hold time	t_{ah}	60	—	ns
Memory write time	t_{write}	1	3000	ms
$\overline{WE}$ rise time	t_r	—	30	ns
$\overline{WE}$ fall time	t_f	—	30	ns
Write setup time	t_{pns}	100	—	ns
Write end setup time	t_{pnh}	100	—	ns

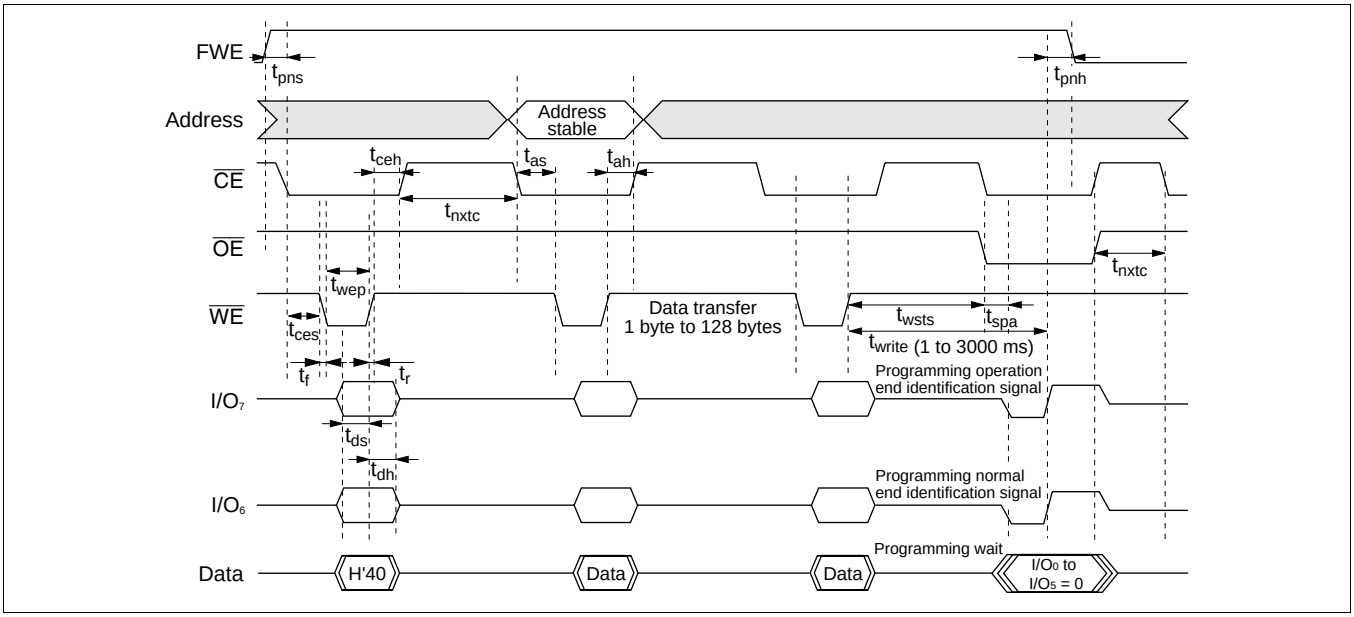

Figure 19-29 Auto-Program Mode Timing Waveforms

Notes on Use of Auto-Program Mode

- In auto-program mode, 128 bytes are programmed simultaneously. This should be carried out by executing 128 consecutive byte transfers.
- A 128-byte data transfer is necessary even when programming fewer than 128 bytes. In this case, H'FF data must be written to the extra addresses.
- The lower 8 bits of the transfer address must be H'00 or H'80. If a value other than an effective address is input, processing will switch to a memory write operation but a write error will be flagged.
- Memory address transfer is performed in the second cycle (figure 19-29). Do not perform memory address transfer after the second cycle.
- Do not perform a command write during a programming operation.
- Perform one auto-programming operation for a 128-byte block for each address. Characteristics are not guaranteed for two or more programming operations.
- Confirm normal end of auto-programming by checking I/O_6. Alternatively, status read mode can also be used for this purpose (I/O_7 status polling uses the auto-program operation end identification pin).
- The status polling I/O_6 and I/O_7 pin information is retained until the next command write. Until the next command write is performed, reading is possible by enabling $\overline{CE}$ and $\overline{OE}$.

19.13.6 Auto-Erase Mode

AC Characteristics

Table 19-25 AC Characteristics in Auto-Erase Mode

Conditions: V_{CC} = 5.0 V ±10%, V_{SS} = 0 V, T_a = 25°C ±5°C

Item	Symbol	Min	Max	Unit
Command write cycle	t_{nxtc}	20	—	µs
$\overline{CE}$ hold time	t_{ceh}	0	—	ns
$\overline{CE}$ setup time	t_{ces}	0	—	ns
Data hold time	t_{dh}	50	—	ns
Data setup time	t_{ds}	50	—	ns
Write pulse width	t_{wep}	70	—	ns
Status polling start time	t_{ests}	1	—	ms
Status polling access time	t_{spa}	—	150	ns
Memory erase time	t_{erase}	100	40000	ms
$\overline{WE}$ rise time	t_r	—	30	ns
$\overline{WE}$ fall time	t_f	—	30	ns
Erase setup time	t_{ens}	100	—	ns
Erase end setup time	t_{enh}	100	—	ns

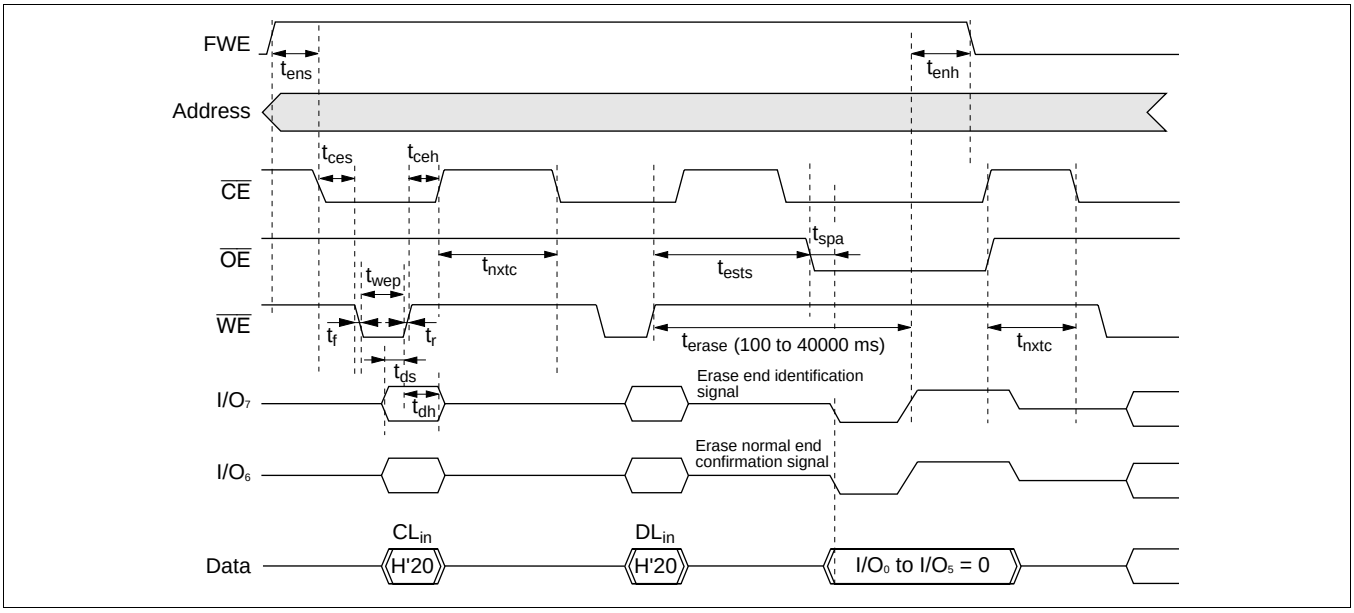

Figure 19-30 Auto-Erase Mode Timing Waveforms

Notes on Use of Auto-Erase Mode

- Auto-erase mode supports only entire memory erasing.
- Do not perform a command write during auto-erasing.
- Confirm normal end of auto-erasing by checking I/O_6. Alternatively, status read mode can also be used for this purpose (I/O_7 status polling uses the auto-erase operation end identification pin).

- The status polling I/O_6 and I/O_7 pin information is retained until the next command write. Until the next command write is performed, reading is possible by enabling $\overline{CE}$ and $\overline{OE}$.

19.13.7 Status Read Mode

- Status read mode is used to identify what type of abnormal end has occurred. Use this mode when an abnormal end occurs in auto-program mode or auto-erase mode.
- The return code is retained until a command write for other than status read mode is performed.

Table 19-26 AC Characteristics in Status Read Mode

Conditions: V_{CC} = 5.0 V ±10%, V_{SS} = 0 V, T_a = 25°C ±5°C

Item	Symbol	Min	Max	Unit
Command write cycle	t_{nxtc}	20	—	µs
$\overline{CE}$ hold time	t_{ceh}	0	—	ns
$\overline{CE}$ setup time	t_{ces}	0	—	ns
Data hold time	t_{dh}	50	—	ns
Data setup time	t_{ds}	50	—	ns
Write pulse width	t_{wep}	70	—	ns
$\overline{OE}$ output delay time	t_{oe}	—	150	ns
Disable delay time	t_{df}	—	100	ns
$\overline{CE}$ output delay time	t_{ce}	—	150	ns
$\overline{WE}$ rise time	t_r	—	30	ns
$\overline{WE}$ fall time	t_f	—	30	ns

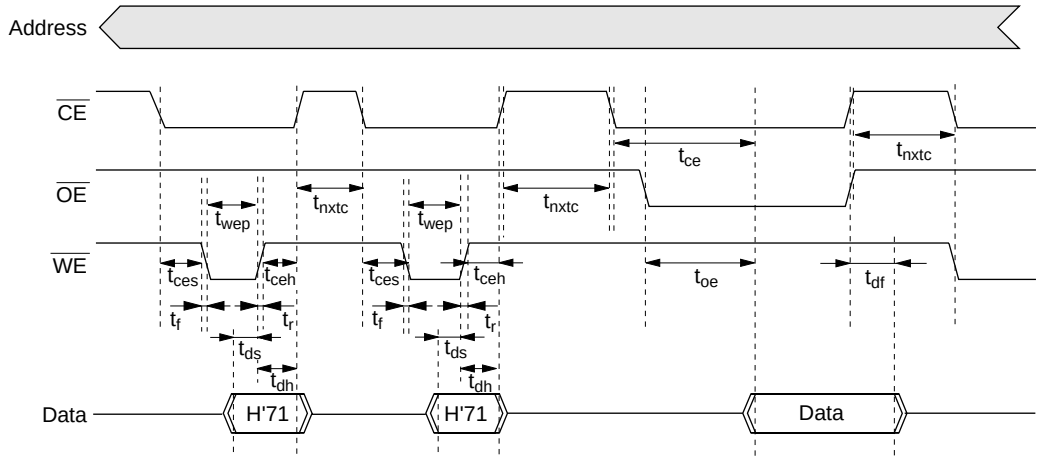

Note: I/O_2 and I/O_3 are undefined.

Figure 19-31 Status Read Mode Timing Waveforms

Table 19-27 Status Read Mode Return Commands

Pin Name	I/O_7	I/O_6	I/O_5	I/O_4	I/O_3	I/O_2	I/O_1	I/O_0
Attribute	Normal end identification	Command error	Program-ming error	Erase error	—	—	Program-ming or erase count exceeded	Effective address error
Initial value	0	0	0	0	0	0	0	0
Indications	Normal end: 0 Abnormal end: 1	Command error: 1 Otherwise: 0	Program-ming error: 1 Otherwise: 0	Erase error: 1 Otherwise: 0	—	—	Count exceeded: 1 Otherwise: 0	Effective address error: 1 Otherwise: 0

Note: I/O_2 and I/O_3 are undefined.

19.13.8 Status Polling

- The I/O_7 status polling flag indicates the operating status in auto-program or auto-erase mode.
- The I/O_6 status polling flag indicates a normal or abnormal end in auto-program or auto-erase mode.

Table 19-28 Status Polling Output Truth Table

Pin Names	Internal Operation in Progress	Abnormal End	—	Normal End
I/O_7	0	1	0	1
I/O_6	0	0	1	1
I/O_0 to I/O_5	0	0	0	0

19.13.9 Programmer Mode Transition Time

Commands cannot be accepted during the oscillation stabilization period or the programmer mode setup period. After the programmer mode setup time, a transition is made to memory read mode.

Table 19-29 Command Wait State Transition Time Specifications

Item	Symbol	Min	Max	Unit
Standby release (oscillation stabilization time)	t_{osc1}	10	—	ms
Programmer mode setup time	t_{bmv}	10	—	ms
V_{CC} hold time	t_{dwn}	0	—	ms

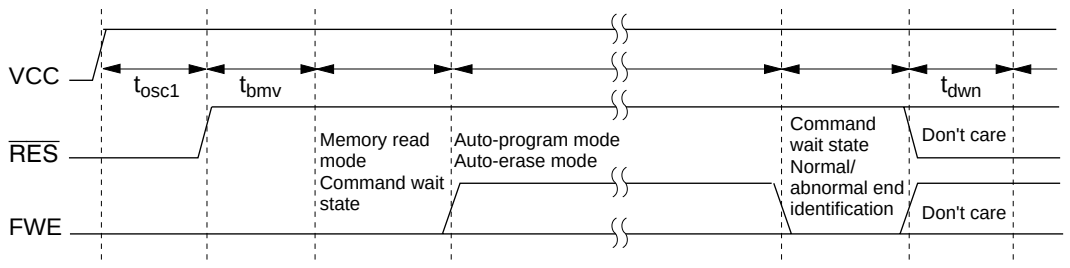

Note: Except in auto-program mode and auto-erase mode, drive the FWE input pin low.

Figure 19-32 Oscillation Stabilization Time, Programmer Mode Setup Time, and Power Supply Fall Sequence

19.13.10 Notes on Memory Programming

- When programming addresses which have previously been programmed, carry out auto-erasing before auto-programming.
- When performing programming using PROM mode on a chip that has been programmed/erased in an on-board programming mode, auto-erasing is recommended before carrying out auto-programming.

Notes: 1. The flash memory is initially in the erased state when the device is shipped by Renesas Technology. For other chips for which the erasure history is unknown, it is recommended that auto-erasing be executed to check and supplement the initialization (erase) level.
2. Auto-programming should be performed once only on the same address block.

19.14 Flash Memory Programming and Erasing Precautions

Precautions concerning the use of on-board programming mode, the RAM emulation function, and PROM mode are summarized below.

Use the specified voltages and timing for programming and erasing: Applied voltages in excess of the rating can permanently damage the device. Use a PROM programmer that supports Renesas Technology microcomputer device types with 128-kbyte on-chip flash memory.

Do not select the HN28F101 setting for the PROM programmer, and only use the specified socket adapter. Incorrect use will result in damaging the device.

Powering on and off (see figures 19-33 to 19-35): Do not apply a high level to the FWE pin until V_{CC} has stabilized. Also, drive the FWE pin low before turning off V_{CC}.

When applying or disconnecting V_{CC}, fix the FWE pin low and place the flash memory in the hardware protection state.

The power-on and power-off timing requirements should also be satisfied in the event of a power failure and subsequent recovery.

FWE application/disconnection (see figures 19-33 to 19-35): FWE application should be carried out when MCU operation is in a stable condition. If MCU operation is not stable, fix the FWE pin low and set the protection state.

The following points must be observed concerning FWE application and disconnection to prevent unintentional programming or erasing of flash memory:

- Apply FWE when the V_{CC} voltage has stabilized within its rated voltage range. Apply FWE when oscillation has stabilized (after the elapse of the oscillation settling time).
- In boot mode, apply and disconnect FWE during a reset.

- In user program mode, FWE can be switched between high and low level regardless of the reset state. FWE input can also be switched during program execution in flash memory.
- Do not apply FWE if program runaway has occurred.
- Disconnect FWE only when the SWE, ESU, PSU, EV, PV, P, and E bits in FLMCR1 and FLMCR2 are cleared.
- Make sure that the SWE, ESU, PSU, EV, PV, P, and E bits are not set by mistake when applying or disconnecting FWE.

Do not apply a constant high level to the FWE pin: Apply a high level to the FWE pin only when programming or erasing flash memory. A system configuration in which a high level is constantly applied to the FWE should be avoided. Also, while a high level is applied to the FWE pin, the watchdog timer should be activated to prevent overprogramming or overerasing due to program runaway, etc.

Use the recommended algorithm when programming and erasing flash memory: The recommended algorithm enables programming and erasing to be carried out without subjecting the device to voltage stress or sacrificing program data reliability. When setting the P or E bit in FLMCR1, the watchdog timer should be set beforehand as a precaution against program runaway, etc.

Do not set or clear the SWE bit during program execution in flash memory: Clear the SWE bit before executing a program or reading data in flash memory. When the SWE bit is set, data in flash memory can be rewritten, but flash memory should only be accessed for verify operations (verification during programming/erasing). Similarly, when using the RAM emulation function while a high level is being input to the FWE pin, the SWE bit must be cleared before executing a program or reading data in flash memory. However, the RAM area overlapping flash memory space can be read and written to regardless of whether the SWE bit is set or cleared.

Do not use interrupts while flash memory is being programmed or erased: All interrupt requests, including NMI, should be disabled during FWE application to give priority to program/erase operations.

Do not perform additional programming. Erase the memory before reprogramming. In on-board programming, perform only one programming operation on a 32-byte programming unit block. In PROM mode, too, perform only one programming operation on a 128-byte programming unit block. Programming should be carried out with the entire programming unit block erased.

Before programming, check that the chip is correctly mounted in the PROM programmer. Overcurrent damage to the device can result if the index marks on the PROM programmer socket, socket adapter, and chip are not correctly aligned.

Do not touch the socket adapter or chip during programming. Touching either of these can cause contact faults and write errors.

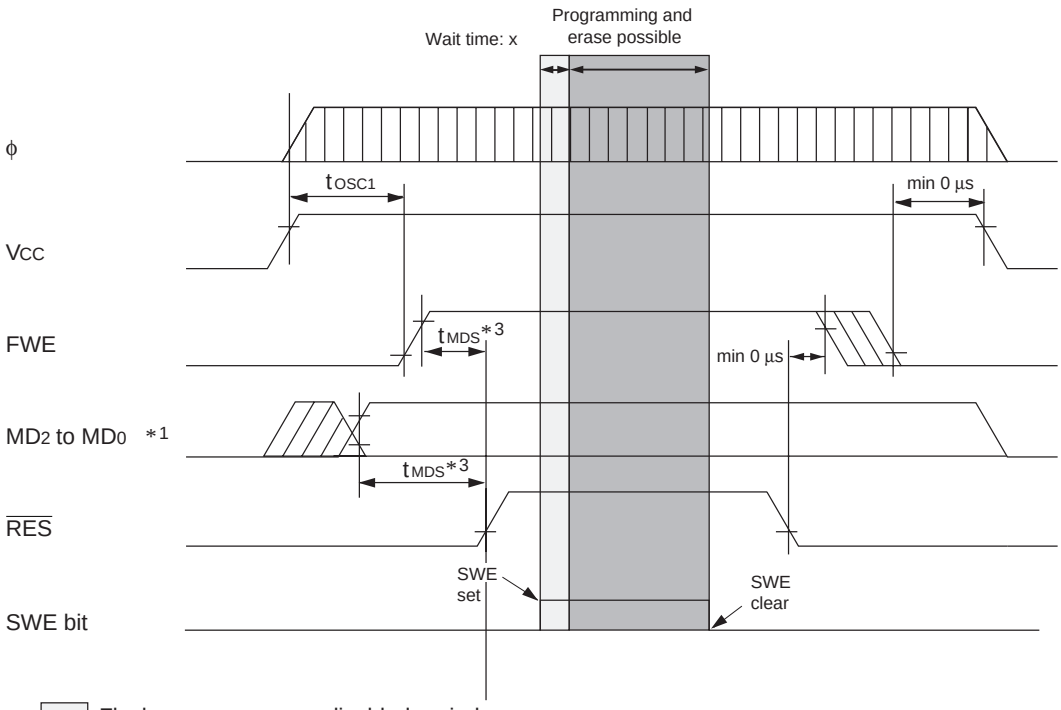

Flash memory access disabled period
(x: Wait time after SWE setting) *2

Flash memory reprogrammable period
(Flash memory program execution and data read, other than verify, are disabled.)

Notes:
1. Always fix the level by pulling down or pulling up the mode pins (MD_2 to MD_0) until powering off, except for mode switching.
2. See section 22.7.6, Flash Memory Characteristics.
3. Mode programming setup time t_{MDS} (min) = 200 ns

Figure 19-33 Powering On/Off Timing (Boot Mode)

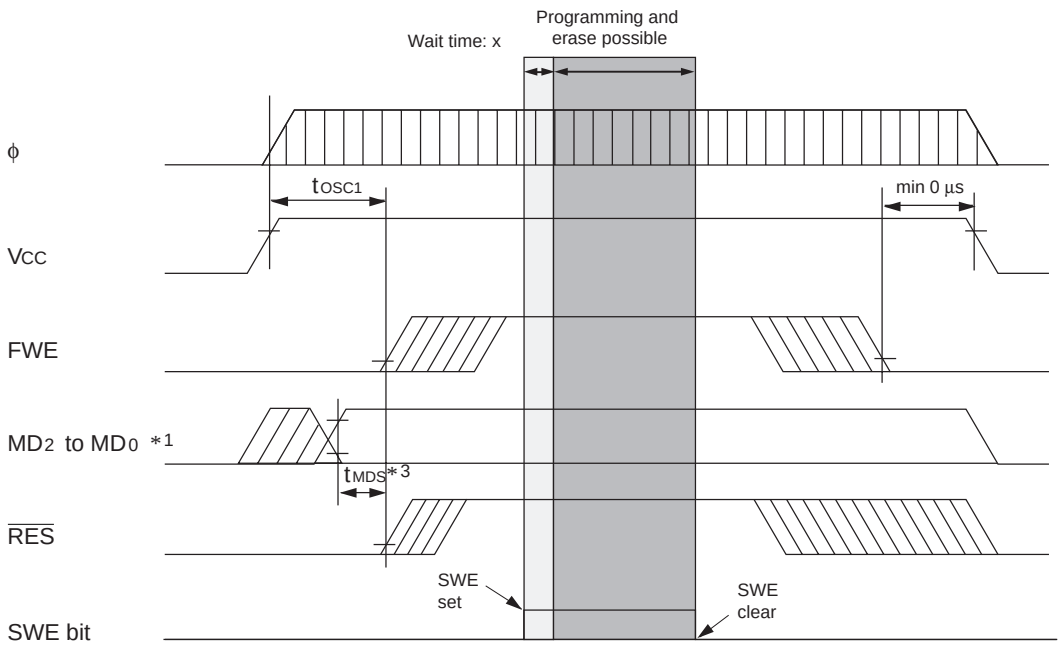

Flash memory access disabled period
(x: Wait time after SWE setting) *2

Flash memory reprogrammable period
(Flash memory program execution and data read, other than verify, are disabled.)

Notes: 1. Always fix the level by pulling down or pulling up the mode pins (MD_2 to MD_0) up to powering off, except for mode switching.

2. See section 22.7.6, Flash Memory Characteristics.

3. Mode programming setup time t_{MDS} (min) = 200 ns

Figure 19-34 Powering On/Off Timing (User Program Mode)

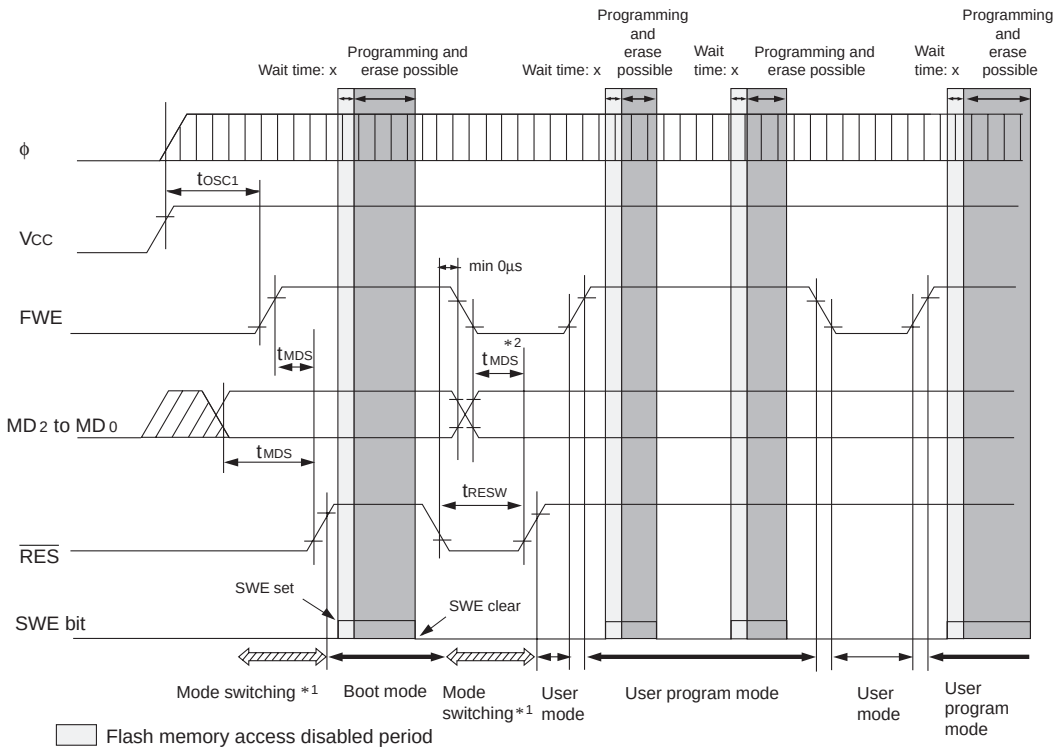

Flash memory access disabled period
(x: Wait time after SWE setting) *3

Flash memory reprogammable period
(Flash memory program execution and data read, other than verify, are disabled.)

Notes: 1. In transition to the boot mode and transition from the boot mode to another mode, mode switching via $\overline{RES}$ input is necessary.
During this switching period (period during which a low level is input to the $\overline{RES}$ pin), the state of the address dual port and bus control output signals ($\overline{AS}$,$\overline{RD}$,$\overline{WR}$) changes. Therefore, do not use these pins as output signals during this switching period.

2. When making a transition from the boot mode to another mode, the mode programming setup time t_{MDS} (min)= 200 ns relative to the $\overline{RES}$ clear timing is necessary.

3. See section 22.7.6, Flash Memory Characteristics.

Figure 19-35 Mode Transition Timing
(Example: Boot mode → User mode ↔ User program mode)

19.15 Overview of Flash Memory (H8S/2398 F-ZTAT)

19.15.1 Features

The H8S/2398 F-ZTAT have 256 kbytes of on-chip flash memory. The features of the flash memory are summarized below.

- Four flash memory operating modes
  - — Program mode
  - — Erase mode
  - — Program-verify mode
  - — Erase-verify mode
- Programming/erase methods
  The flash memory is programmed 128 bytes at a time. Erasing is performed by block erase (in single-block units). To erase the entire flash memory, the individual blocks must be erased sequentially. Block erasing can be performed as required on 4-kbyte, 32-kbyte, and 64-kbyte blocks.
- Programming/erase times
  The flash memory programming time is 10 ms (typ.) for simultaneous 128-byte programming, equivalent to 78 μs (typ.) per byte, and the erase time is 50 ms (typ.).
- Reprogramming capability
  Depending on the product, the maximum number of times the flash memory can be reprogrammed is either 100 or 1,000.
  - — Reprogrammable up to 100 times: HD64F2398TE, HD64F2398F
  - — Reprogrammable up to 1,000 times: HD64F2398TET, HD64F2398FT
- On-board programming modes
  There are two modes in which flash memory can be programmed/erased/verified on-board:
  - — Boot mode
  - — User program mode
- Automatic bit rate adjustment
  With data transfer in boot mode, the bit rate of the chip can be automatically adjusted to match the transfer bit rate of the host.
- Flash memory emulation by RAM
  Part of the RAM area can be overlapped onto flash memory, to emulate flash memory updates in real time.
- Protect modes
  There are three protect modes, hardware, software, and error protect, which allow protected status to be designated for flash memory program/erase/verify operations.
- Programmer mode
  Flash memory can be programmed/erased in programmer mode, using a PROM programmer, as well as in on-board programming mode.

19.15.2 Overview

Block Diagram

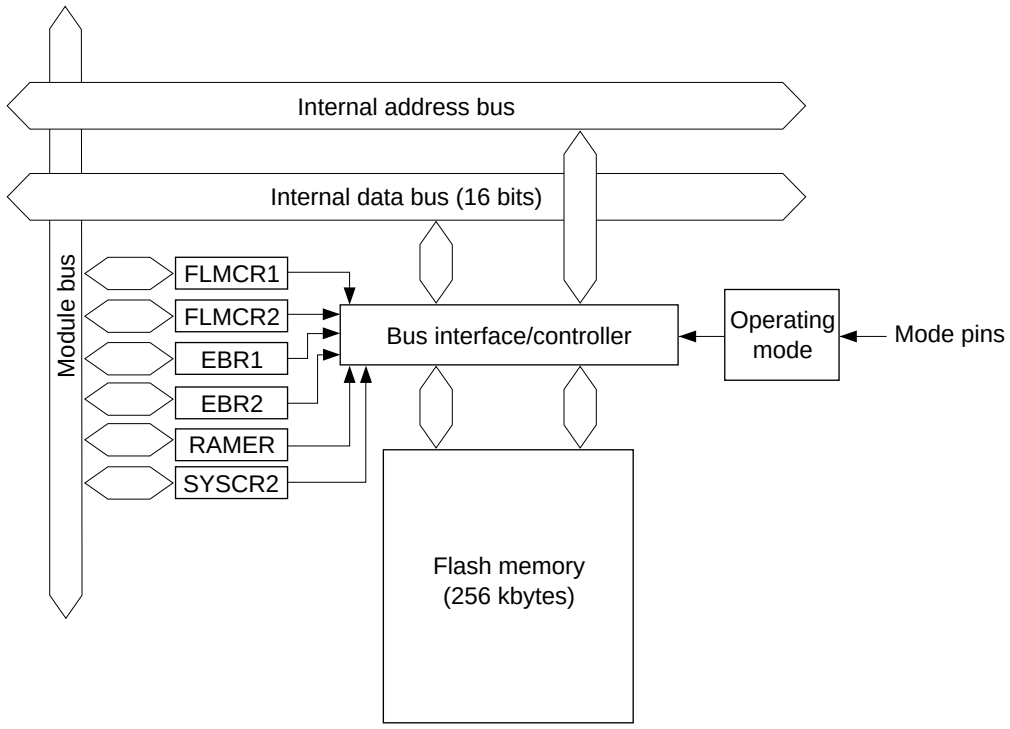

Legend:
FLMCR1: Flash memory control register 1
FLMCR2: Flash memory control register 2
EBR1: Erase block register 1
EBR2: Erase block register 2
RAMER: RAM emulation register
SYSCR2: System control register 2

Figure 19-36 Block Diagram of Flash Memory

19.15.3 Flash Memory Operating Modes

Mode Transitions: When the mode pins are set in the reset state and a reset-start is executed, the chip enters one of the operating modes shown in figure 19-37. In user mode, flash memory can be read but not programmed or erased.

Flash memory can be programmed and erased in boot mode, user program mode, and PROM mode.

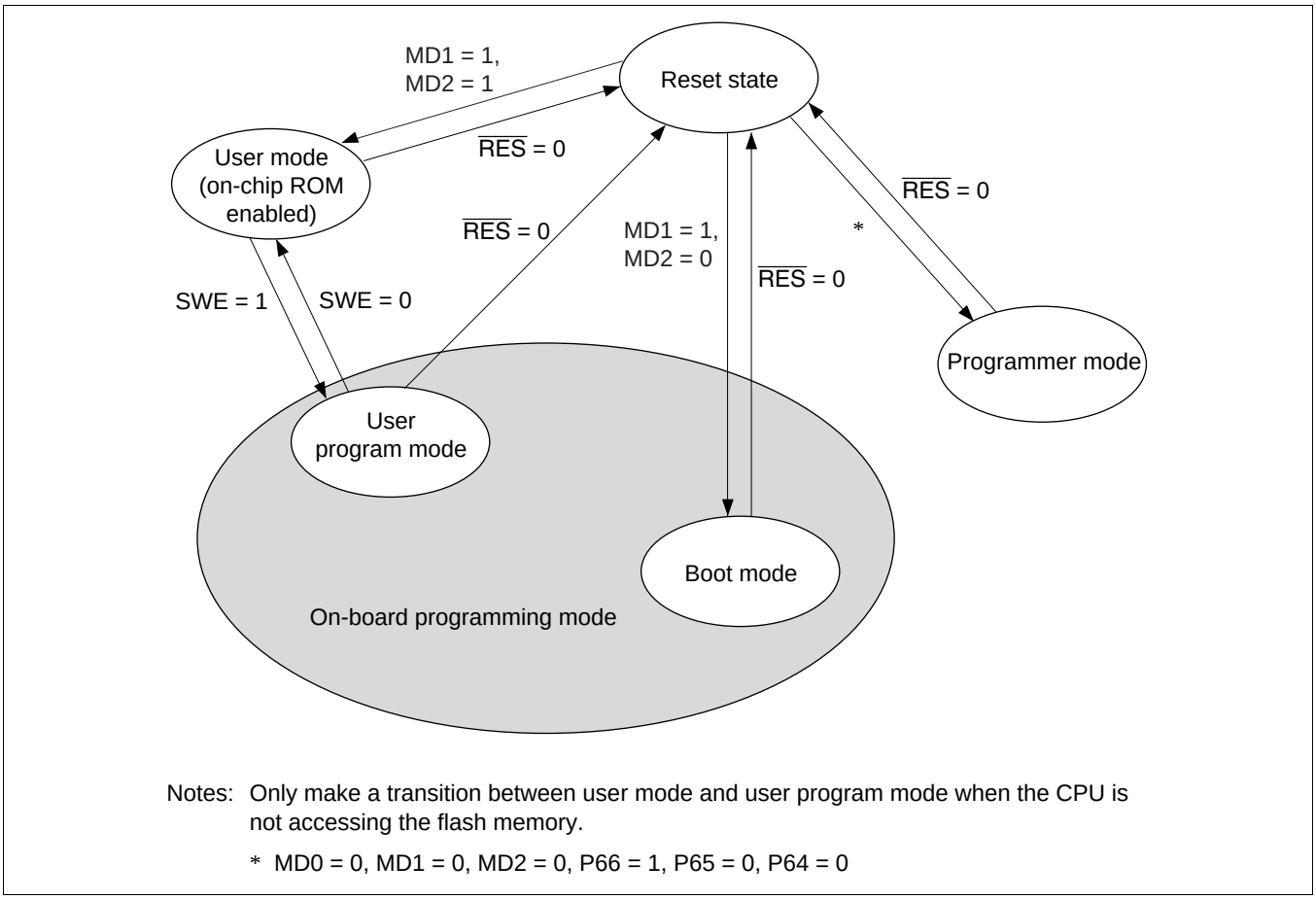

Notes: Only make a transition between user mode and user program mode when the CPU is not accessing the flash memory.

* MD0 = 0, MD1 = 0, MD2 = 0, P66 = 1, P65 = 0, P64 = 0

Figure 19-37 Flash Memory Mode Transitions

19.15.4 On-Board Programming Modes

- Boot mode

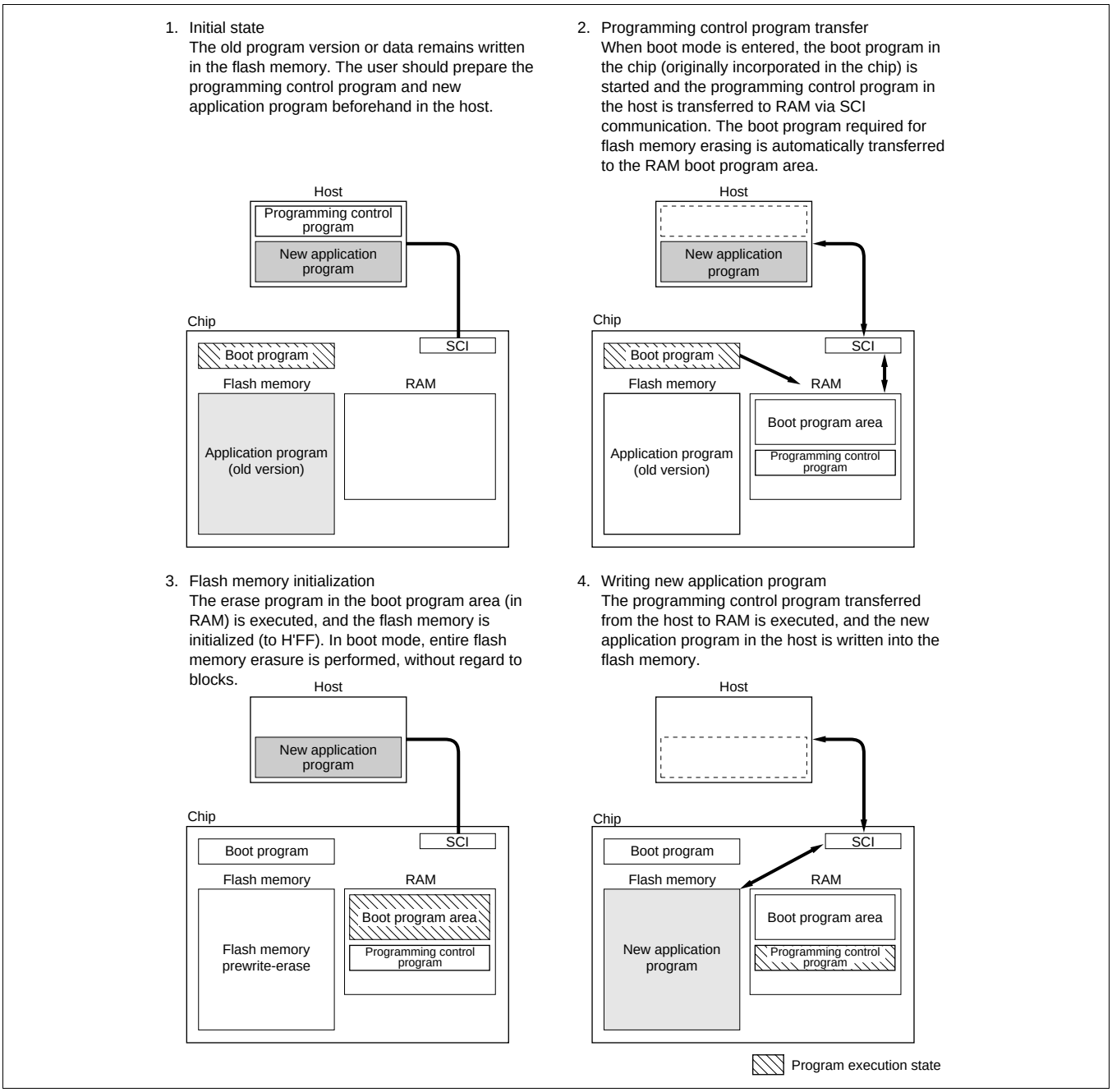

Figure 19-38 Boot Mode

- User program mode

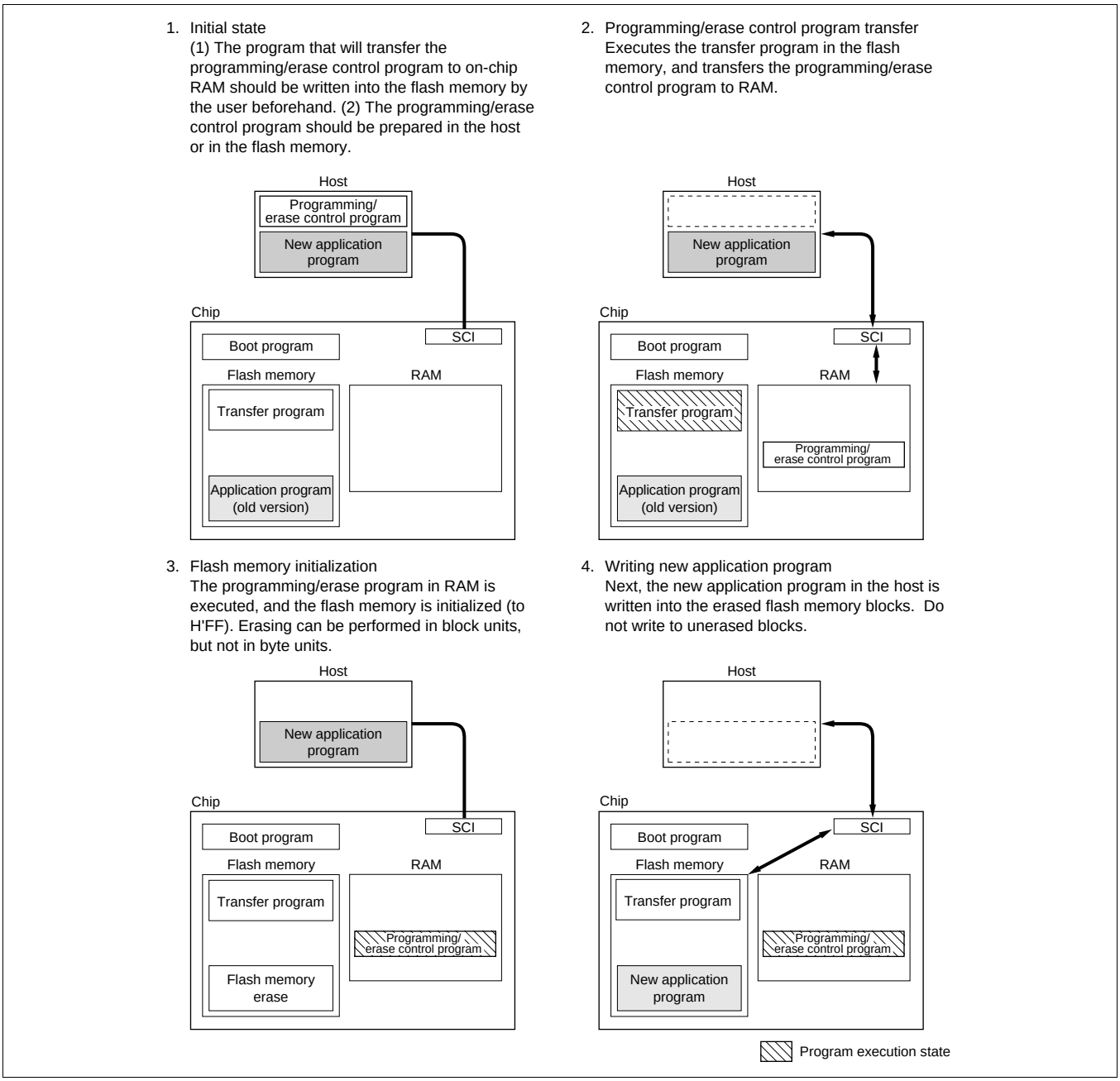

Figure 19-39 User Program Mode (Example)

19.15.5 Flash Memory Emulation in RAM

Reading Overlap RAM Data in User Mode and User Program Mode: Emulation should be performed in user mode or user program mode. When the emulation block set in RAMER is accessed while the emulation function is being executed, data written in the overlap RAM is read.

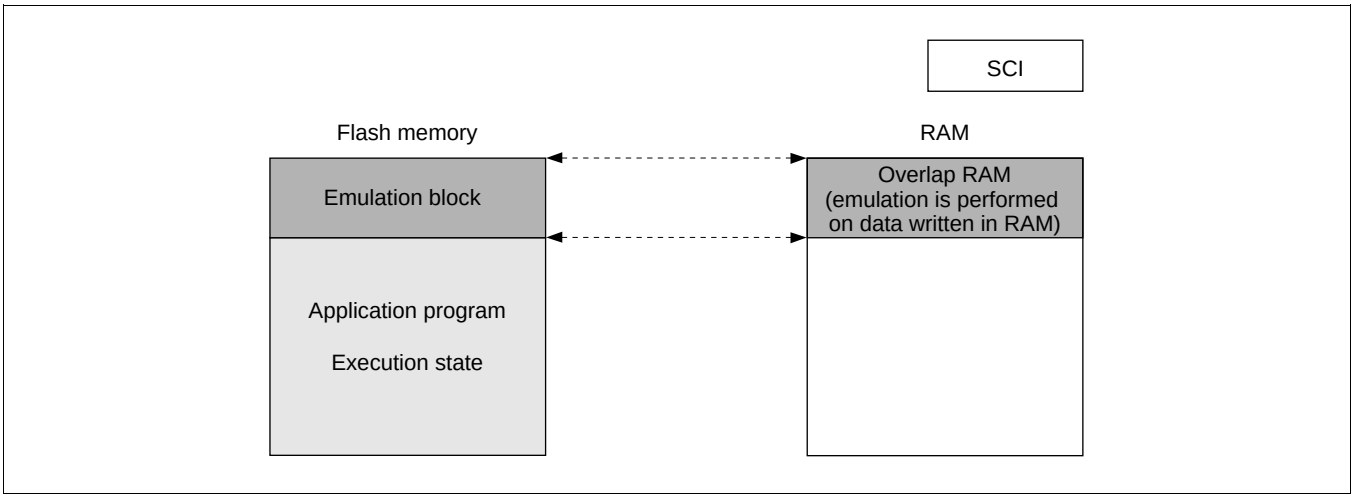

Figure 19-40 Reading Overlap RAM Data in User Mode and User Program Mode

Writing Overlap RAM Data in User Program Mode: When overlap RAM data is confirmed, the RAMS bit is cleared, RAM overlap is released, and writes should actually be performed to the flash memory.

When the programming control program is transferred to RAM, ensure that the transfer destination and the overlap RAM do not overlap, as this will cause data in the overlap RAM to be rewritten.

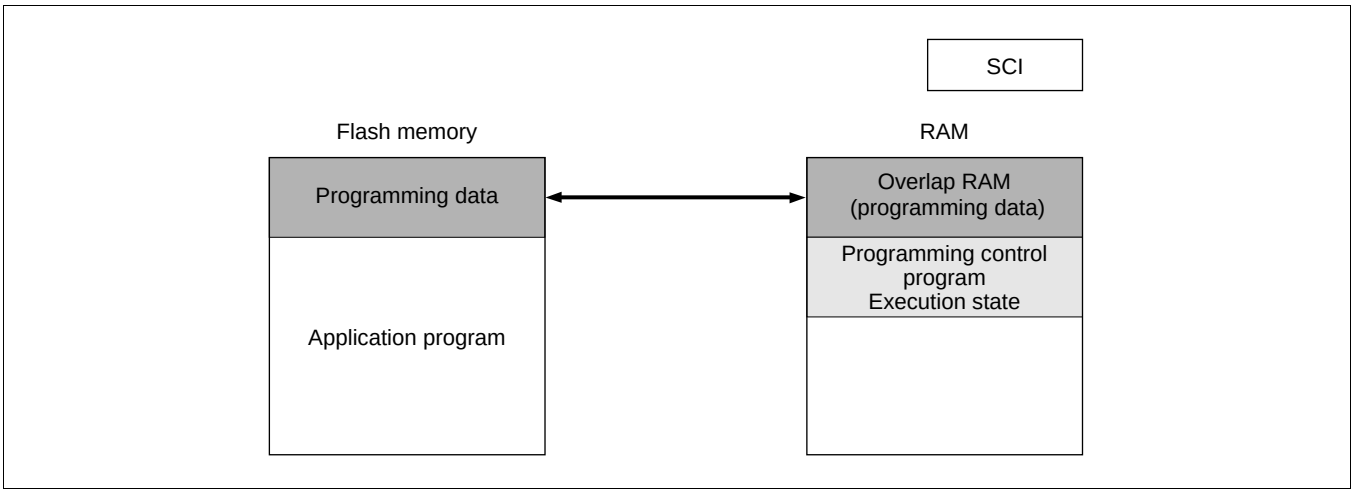

Figure 19-41 Writing Overlap RAM Data in User Program Mode

19.15.6 Differences between Boot Mode and User Program Mode

Table 19-30 Differences between Boot Mode and User Program Mode

	Boot Mode	User Program Mode
Entire memory erase	Yes	Yes
Block erase	No	Yes
Programming control program*	Program/program-verify	Erase/erase-verify/program/ program-verify/emulation

Note: * To be provided by the user, in accordance with the recommended algorithm.

19.15.7 Block Configuration

Products include 256 kbytes of flash memory are divided into three 64-kbyte blocks, one 32-kbyte block, and eight 4-kbyte blocks.

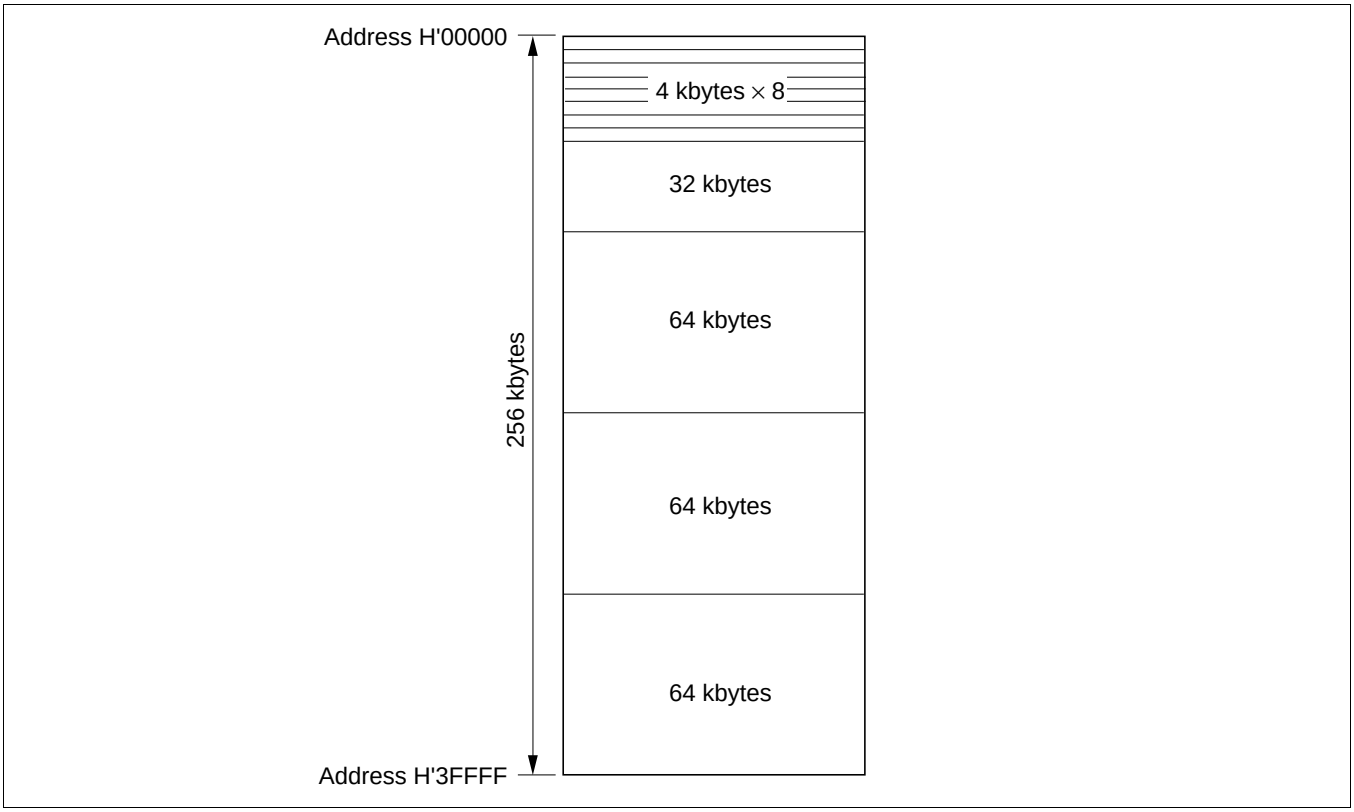

Figure 19-42 Flash Memory Block Configuration

19.15.8 Pin Configuration

The flash memory is controlled by means of the pins shown in table 19-31.

Table 19-31 Flash Memory Pins

Pin Name	Abbreviation	I/O	Function
Reset	$\overline{\text{RES}}$	Input	Reset
Mode 2	MD2	Input	Sets MCU operating mode
Mode 1	MD1	Input	Sets MCU operating mode
Mode 0	MD0	Input	Sets MCU operating mode
Port 66	P66	Input	Sets MCU operating mode in programmer mode
Port 65	P65	Input	Sets MCU operating mode in programmer mode
Port 64	P64	Input	Sets MCU operating mode in programmer mode
Transmit data	TxD1	Output	Serial transmit data output
Receive data	RxD1	Input	Serial receive data input

19.15.9 Register Configuration

The registers used to control the on-chip flash memory when enabled are shown in table 19-32.
In order to access the FLMCR1, FLMCR2, EBR1, and EBR2 registers, the FLSHE bit must be set to 1 in SYSCR2 (except RAMER).

Table 19-32 Flash Memory Registers

Register Name	Abbreviation	R/W	Initial Value	Address*[1]
Flash memory control register 1	FLMCR1*[5]	R/W*[3]	H'80	H'FFC8*[2]
Flash memory control register 2	FLMCR2*[5]	R/W*[3]	H'00*[4]	H'FFC9*[2]
Erase block register 1	EBR1*[5]	R/W*[3]	H'00*[4]	H'FFCA*[2]
Erase block register 2	EBR2*[5]	R/W*[3]	H'00*[4]	H'FFCB*[2]
System control register 2	SYSCR2*[6]	R/W	H'00	H'FF42
RAM emulation register	RAMER	R/W	H'00	H'FEDB

Notes: 1. Lower 16 bits of the address.
2. Flash memory. Registers selection is performed by the FLSHE bit in system control register 2 (SYSCR2).
3. In modes in which the on-chip flash memory is disabled, a read will return H'00, and writes are invalid.
4. If a high level is input and the SWE bit in FLMCR1 is not set, these registers are initialized to H'00.
5. FLMCR1, FLMCR2, EBR1, and EBR2 are 8-bit registers. Only byte accesses are valid for these registers, the access requiring 2 states.
6. The SYSCR2 register can only be used in the F-ZTAT version. In the masked ROM version this register will return an undefined value if read, and cannot be modified.

19.16 Register Descriptions

19.16.1 Flash Memory Control Register 1 (FLMCR1)

Bit :	7	6	5	4	3	2	1	0
	FWE	SWE	ESU	PSU	EV	PV	E	P
Initial value :	1	0	0	0	0	0	0	0
R/W :	R	R/W	R/W	R/W	R/W	R/W	R/W	R/W

FLMCR1 is an 8-bit register used for flash memory operating mode control. Program-verify mode or erase-verify mode is entered by setting SWE to 1, then setting the EV or PV bit. Program mode is entered by setting SWE to 1, then setting the PSU bit, and finally setting the P bit. Erase mode is entered by setting SWE to 1, then setting the ESU bit, and finally setting the E bit. FLMCR1 is initialized to H'80 by a reset, and in hardware standby mode and software standby mode. When on-chip flash memory is disabled, a read will return H'00, and writes are invalid.

Writing to bits ESU, PSU, EV, and PV in FLMCR1 is enabled only when SWE = 1; writing to the E bit is enabled only when SWE = 1, and ESU = 1; and writing to the P bit is enabled only when SWE = 1, and PSU = 1.

Bit 7—Flash Write Enable Bit (FWE): Sets hardware protection against flash memory programming/erasing. These bits cannot be modified and are always read as 1 in this model.

Bit 6—Software Write Enable Bit (SWE): Enables or disables flash memory programming and erasing. This bit should be set when setting bits 5 to 0, EBR1 bits 7 to 0, and EBR2 bits 3 to 0.

When SWE = 1, the flash memory can only be read in program-verify or erase-verify mode.

Bit 6 SWE	Description	
0	Writes disabled	(Initial value)
1	Writes enabled	

Bit 5—Erase Setup Bit (ESU): Prepares for a transition to erase mode. Do not set the SWE, PSU, EV, PV, E, or P bit at the same time.

Bit 5 ESU	Description	
0	Erase setup cleared	(Initial value)
1	Erase setup [Setting condition] When SWE = 1	

Bit 4—Program Setup Bit (PSU): Prepares for a transition to program mode. Do not set the SWE, ESU, EV, PV, E, or P bit at the same time.

Bit 4 PSU	Description	
0	Program setup cleared	(Initial value)
1	Program setup [Setting condition] When SWE = 1	

Bit 3—Erase-Verify (EV): Selects erase-verify mode transition or clearing. Do not set the SWE, ESU, PSU, PV, E, or P bit at the same time.

Bit 3 EV	Description	
0	Erase-verify mode cleared	(Initial value)
1	Transition to erase-verify mode [Setting condition] When SWE = 1	

Bit 2—Program-Verify (PV): Selects program-verify mode transition or clearing. Do not set the SWE, ESU, PSU, EV, E, or P bit at the same time.

Bit 2 PV	Description	
0	Program-verify mode cleared	(Initial value)
1	Transition to program-verify mode [Setting condition] When SWE = 1	

Bit 1—Erase (E): Selects erase mode transition or clearing. Do not set the SWE, ESU, PSU, EV, PV, or P bit at the same time.

Bit 1 E	Description	
0	Erase mode cleared	(Initial value)
1	Transition to erase mode [Setting condition] When SWE = 1, and ESU = 1	

Bit 0—Program (P): Selects program mode transition or clearing. Do not set the SWE, PSU, ESU, EV, PV, or E bit at the same time.

Bit 0 P	Description	
0	Program mode cleared	(Initial value)
1	Transition to program mode [Setting condition] When SWE = 1, and PSU = 1	

19.16.2 Flash Memory Control Register 2 (FLMCR2)

Bit	:	7	6	5	4	3	2	1	0
		FLER	—	—	—	—	—	—	—
Initial value	:	0	0	0	0	0	0	0	0
R/W	:	R	—	—	—	—	—	—	—

FLMCR2 is an 8-bit register that controls the flash memory operating modes. FLMCR2 is initialized to H'00 by a reset, and in hardware standby mode and software standby mode.

When on-chip flash memory is disabled, a read will return H'00 and writes are invalid.

Bit 7—Flash Memory Error (FLER): Indicates that an error has occurred during an operation on flash memory (programming or erasing). When FLER is set to 1, flash memory goes to the error-protection state.

Bit 7 FLER	Description	
0	Flash memory is operating normally	(Initial value)
	Flash memory program/erase protection (error protection) is disabled	
	[Clearing condition]	
	Reset or hardware standby mode	
1	An error has occurred during flash memory programming/erasing	
	Flash memory program/erase protection (error protection) is enabled	
	[Setting condition]	
	See section 19.19.3, Error Protection	

Bits 6 to 0—Reserved: These bits cannot be modified and are always read as 0.

19.16.3 Erase Block Register 1 (EBR1)

Bit	:	7	6	5	4	3	2	1	0
EBR1		EB7	EB6	EB5	EB4	EB3	EB2	EB1	EB0
Initial value	:	0	0	0	0	0	0	0	0
R/W	:	R/W	R/W	R/W	R/W	R/W	R/W	R/W	R/W

EBR1 is an 8-bit register that specifies the flash memory erase area block by block. EBR1 is initialized to H'00 by a reset, in hardware standby mode and software standby mode, and the SWE bit in FLMCR1 is not set. When a bit in EBR1 is set, the corresponding block can be erased. Other blocks are erase-protected. Set only one bit in EBR1 and EBR2 together (setting more than one bit will automatically clear all EBR1 and EBR2 bits to 0). When on-chip flash memory is disabled, a read will return H'00 and writes are invalid.

The flash memory block configuration is shown in table 19-33.

19.16.4 Erase Block Registers 2 (EBR2)

Bit :	7	6	5	4	3	2	1	0
EBR2	—	—	—	—	EB11	EB10	EB9	EB8
Initial value :	0	0	0	0	0	0	0	0
R/W :	—	—	—	—	R/W	R/W	R/W	R/W

EBR2 is an 8-bit register that specifies the flash memory erase area block by block. EBR2 is initialized to H'00 by a reset, in hardware standby mode and software standby mode, and the SWE bit in FLMCR1 is not set. When a bit in EBR2 is set, the corresponding block can be erased. Other blocks are erase-protected. Set only one bit in EBR2 and EBR1 together (setting more than one bit will automatically clear all EBR1 and EBR2 bits to 0). Bits 4 to 7 are reserved; they are always read as 0 and cannot be modified. When on-chip flash memory is disabled, a read will return H'00, and writes are invalid.

The flash memory block configuration is shown in table 19-33.

Table 19-33 Flash Memory Erase Blocks

Block (Size)	Address
EB0 (4 kbytes)	H'000000 to H'000FFF
EB1 (4 kbytes)	H'001000 to H'001FFF
EB2 (4 kbytes)	H'002000 to H'002FFF
EB3 (4 kbytes)	H'003000 to H'003FFF
EB4 (4 kbytes)	H'004000 to H'004FFF
EB5 (4 kbytes)	H'005000 to H'005FFF
EB6 (4 kbytes)	H'006000 to H'006FFF
EB7 (4 kbytes)	H'007000 to H'007FFF
EB8 (32 kbytes)	H'008000 to H'00FFFF
EB9 (64 kbytes)	H'010000 to H'01FFFF
EB10 (64 kbytes)	H'020000 to H'02FFFF
EB11 (64 kbytes)	H'030000 to H'03FFFF

19.16.5 System Control Register 2 (SYSCR2)

Bit :	7	6	5	4	3	2	1	0
	—	—	—	—	FLSHE	—	—	—
Initial value :	0	0	0	0	0	0	0	0
R/W :	—	—	—	—	R/W	—	—	—

SYSCR2 is an 8-bit readable/writable register that performs on-chip flash memory control.

SYSCR2 is initialized to H'00 by a reset and in hardware standby mode.

SYSCR2 can only be used in the F-ZTAT version. In the masked ROM version this register will return an undefined value if read, and cannot be modified.

Bits 7 to 4—Reserved: These bits cannot be modified and are always read as 0.

Bit 3—Flash Memory Control Register Enable (FLSHE): Controls CPU access to the flash memory control registers (FLMCR1, FLMCR2, EBR1, and EBR2). Writing 1 to the FLSHE bit enables the flash memory control registers to be read and written to. Clearing FLSHE to 0 designates these registers as unselected (the register contents are retained).

Bit 3 FLSHE	Description
0	Flash control registers are not selected for addresses H'FFFFC8 to H'FFFFCB (Initial value)
1	Flash control registers are selected for addresses H'FFFFC8 to H'FFFFCB

Bits 2 to 0—Reserved: These bits cannot be modified and are always read as 0.

19.16.6 RAM Emulation Register (RAMER)

Bit :	7	6	5	4	3	2	1	0
	—	—	—	—	RAMS	RAM2	RAM1	RAM0
Initial value :	0	0	0	0	0	0	0	0
R/W :	—	—	—	—	R/W	R/W	R/W	R/W

RAMER specifies the area of flash memory to be overlapped with part of RAM when emulating real-time flash memory programming. RAMER is initialized to H'00 by a reset and in hardware standby mode. It is not initialized in software standby mode. RAMER settings should be made in user mode or user program mode.

Flash memory area divisions are shown in table 19-34. To ensure correct operation of the emulation function, the ROM for which RAM emulation is performed should not be accessed immediately after this register has been modified. Normal execution of an access immediately after register modification is not guaranteed.

Bits 7 to 4—Reserved: These bits cannot be modified and are always read as 0.

Bit 3—RAM Select (RAMS): Specifies selection or non-selection of flash memory emulation in RAM. When RAMS = 1, all flash memory blocks are program/erase-protected.

Bit 3 RAMS	Description
0	Emulation not selected (Initial value) Program/erase-protection of all flash memory blocks is disabled
1	Emulation selected Program/erase-protection of all flash memory blocks is enabled

Bits 2 to 0—Flash Memory Area Selection (RAM2 to RAM0): These bits are used together with bit 3 to select the flash memory area to be overlapped with RAM. (See table 19-34.)

Table 19-34 Flash Memory Area Divisions

RAM Area	Block Name	RAMS	RAM2	RAM1	RAM0
H'FFDC00 to H'FFEBFF	RAM area, 4 kbytes	0	×	×	×
H'000000 to H'000FFF	EB0 (4 kbytes)	1	0	0	0
H'001000 to H'001FFF	EB1 (4 kbytes)	1	0	0	1
H'002000 to H'002FFF	EB2 (4 kbytes)	1	0	1	0
H'003000 to H'003FFF	EB3 (4 kbytes)	1	0	1	1
H'004000 to H'004FFF	EB4 (4 kbytes)	1	1	0	0
H'005000 to H'005FFF	EB5 (4 kbytes)	1	1	0	1
H'006000 to H'006FFF	EB6 (4 kbytes)	1	1	1	0
H'007000 to H'007FFF	EB7 (4 kbytes)	1	1	1	1

×: Don't care

19.17 On-Board Programming Modes

When pins are set to on-board programming mode, program/erase/verify operations can be performed on the on-chip flash memory. There are two on-board programming modes: boot mode and user program mode. The pin settings for transition to each of these modes are shown in table 19-35. For a diagram of the transitions to the various flash memory modes, see figure 19-37.

Table 19-35 Setting On-Board Programming Modes

Mode		Pins		
MCU Mode	**CPU Operating Mode**	**MD2**	**MD1**	**MD0**
Boot mode	Advanced expanded mode with on-chip ROM enabled	0	1	0
	Advanced single-chip mode			1
User program mode*	Advanced expanded mode with on-chip ROM enabled	1	1	0
	Advanced single-chip mode			1

Note: * Normally, user mode should be used. Set the SWE bit to 1 to make a transition to user program mode before performing a program/erase/verify operation.

19.17.1 Boot Mode

When boot mode is used, the flash memory programming control program must be prepared in the host beforehand. The channel 1 SCI to be used is set to asynchronous mode.

When a reset-start is executed after the H8S/2398 F-ZTAT chip's pins have been set to boot mode, the boot program built into the chip is started and the programming control program prepared in the host is serially transmitted to the chip via the SCI. In the chip, the programming control program received via the SCI is written into the programming control program area in on-chip RAM. After the transfer is completed, control branches to the start address of the programming control program area and the programming control program execution state is entered (flash memory programming is performed).

The transferred programming control program must therefore include coding that follows the programming algorithm given later.

The system configuration in boot mode is shown in figure 19-43, and the boot program mode execution procedure in figure 19-44.

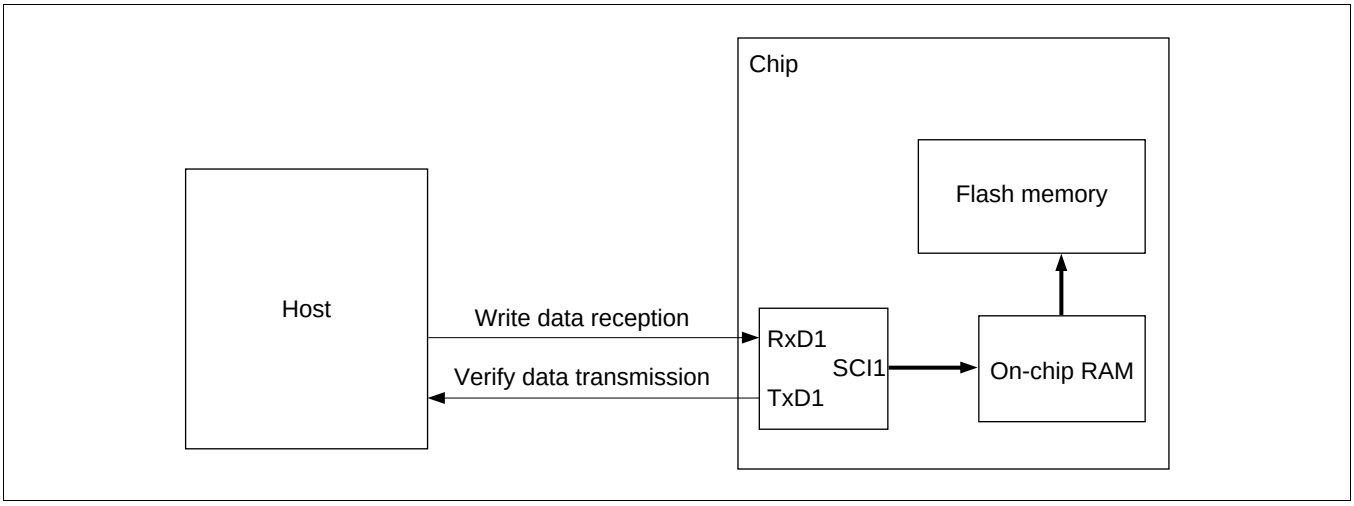

Figure 19-43 System Configuration in Boot Mode

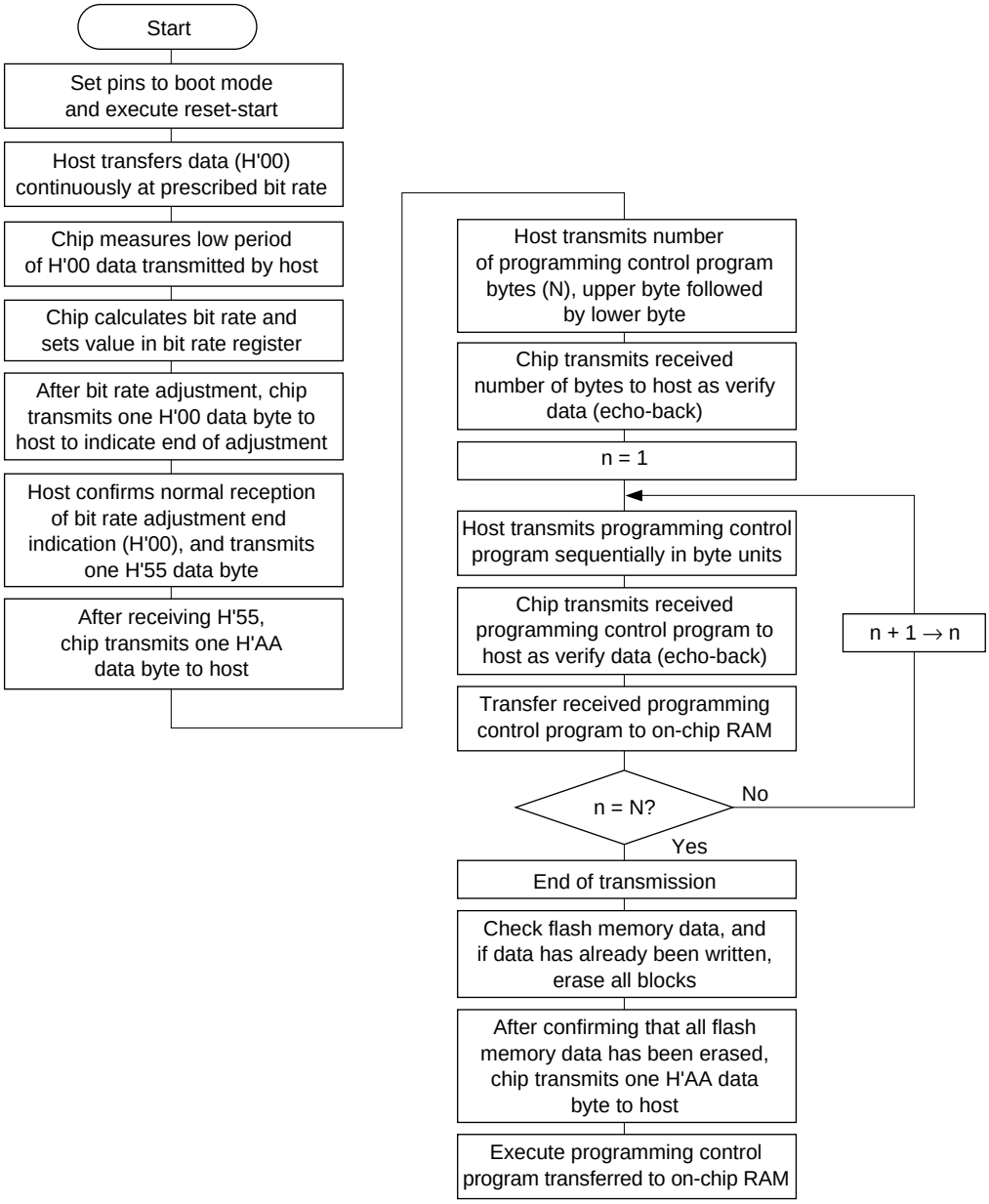

Note: If a memory cell does not operate normally and cannot be erased, one H'FF byte is transmitted as an erase error, and the erase operation and subsequent operations are halted.

Figure 19-44 Boot Mode Execution Procedure

Automatic SCI Bit Rate Adjustment: When boot mode is initiated, H8S/2398 F-ZTAT chip measures the low period of the asynchronous SCI communication data (H'00) transmitted continuously from the host. The SCI transmit/receive format should be set as follows: 8-bit data, 1 stop bit, no parity. The chip calculates the bit rate of the transmission from the host from the measured low period, and transmits one H'00 byte to the host to indicate the end of bit rate adjustment. The host should confirm that this adjustment end indication (H'00) has been received normally, and transmit one H'55 byte to the chip. If reception cannot be performed normally, initiate boot mode again (reset), and repeat the above operations. Depending on the host's transmission bit rate and the chip's system clock frequency, there will be a discrepancy between the bit rates of the host and the chip. To ensure correct SCI operation, the host's transfer bit rate should be set to 9,600 or 19,200 bps.

Table 19-36 shows typical host transfer bit rates and system clock frequencies for which automatic adjustment of the MCU's bit rate is possible. The boot program should be executed within this system clock range.

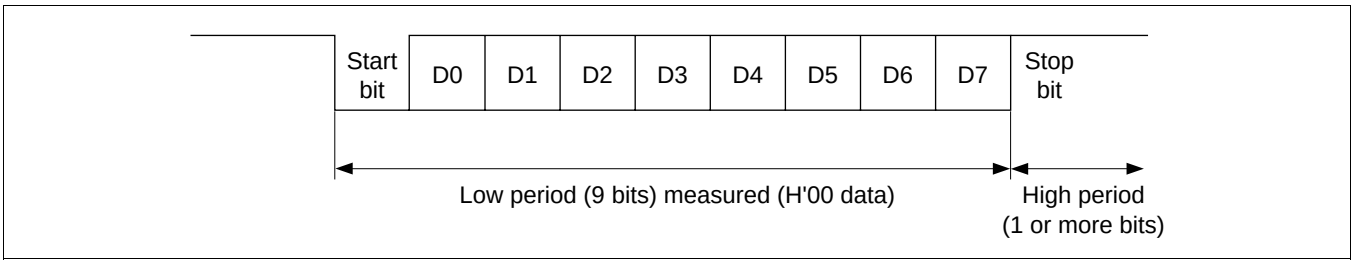

Figure 19-45 Automatic SCI Bit Rate Adjustment

Table 19-36 System Clock Frequencies for which Automatic Adjustment of H8S/2398 F-ZTAT Bit Rate is Possible

Host Bit Rate	System Clock Frequency for which Automatic Adjustment of H8S/2398 F-ZTAT Bit Rate Is Possible
19,200 bps	16 to 20 MHz
9,600 bps	10 to 20 MHz

On-Chip RAM Area Divisions in Boot Mode: In boot mode, the 2-kbyte area from H'FFDC00 to H'FFE3FF is reserved for use by the boot program, as shown in figure 19-46. The area to which the programming control program is transferred is H'FFE400 to H'FFFBFF. The boot program area can be used when the programming control program transferred into RAM enters the execution state. A stack area should be set up as required.

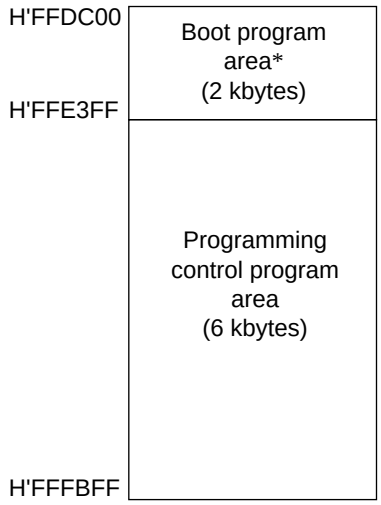

Note: * The boot program area cannot be used until a transition is made to the execution state for the programming control program transferred to RAM. Note that the boot program remains stored in this area after a branch is made to the programming control program.

Figure 19-46 RAM Areas in Boot Mode

Notes on Use of Boot Mode

- When the chip comes out of reset in boot mode, it measures the low-level period of the input at the SCI's RxD1 pin. The reset should end with RxD1 high. After the reset ends, it takes approximately 100 states before the chip is ready to measure the low-level period of the RxD1 pin.
- In boot mode, if any data has been programmed into the flash memory (if all data is not 1), all flash memory blocks are erased. Boot mode is for use when user program mode is unavailable, such as the first time on-board programming is performed, or if the program activated in user program mode is accidentally erased.
- Interrupts cannot be used while the flash memory is being programmed or erased.
- The RxD1 and TxD1 pins should be pulled up on the board.
- Before branching to the programming control program (RAM area H'FFE400 to H'FFFBFF), the chip terminates transmit and receive operations by the on-chip SCI (channel 1) (by clearing the RE and TE bits in SCR to 0), but the adjusted bit rate value remains set in BRR. The transmit data output pin, TxD1, goes to the high-level output state (P31DDR = 1, P31DR = 1).

  The contents of the CPU's internal general registers are undefined at this time, so these registers must be initialized immediately after branching to the programming control program. In particular, since the stack pointer (SP) is used implicitly in subroutine calls, etc., a stack area must be specified for use by the programming control program.

  Initial settings must also be made for the other on-chip registers.
- Boot mode can be entered by making the pin settings shown in table 19-35 and executing a reset-start.

  Boot mode can be cleared by driving the reset pin low, waiting at least 20 states, then setting the mode pins, and executing reset release*[1]. Boot mode can also be cleared by a WDT overflow reset.

Do not change the mode pin input levels in boot mode.

- If the mode pin input levels are changed (for example, from low to high) during a reset, the state of ports with multiplexed address functions and bus control output pins ($\overline{AS}$, $\overline{RD}$, $\overline{HWR}$) will change according to the change in the microcomputer's operating mode*[2].

  Therefore, care must be taken to make pin settings to prevent these pins from becoming output signal pins during a reset, or to prevent collision with signals outside the microcomputer.

Notes: 1. Mode pins input must satisfy the mode programming setup time (t_{MDS} = 200 ns) with respect to the reset release timing.
2. See Appendix D, Pin States.

19.17.2 User Program Mode

When set to user program mode, the chip can program and erase its flash memory by executing a user program/erase control program. Therefore, on-board reprogramming of the on-chip flash memory can be carried out by providing on-board means supply of programming data, and storing a program/erase control program in part of the program area if necessary.

To select user program mode, select a mode that enables the on-chip flash memory (mode 6 or 7). In this mode, on-chip supporting modules other than flash memory operate as they normally would in modes 6 and 7.

The flash memory itself cannot be read while the SWE bit is set to 1 to perform programming or erasing, so the control program that performs programming and erasing should be run in on-chip RAM or external memory. When the program is located in external memory, an instruction for programming the flash memory and the following instruction should be located in on-chip RAM.

Figure 19-47 shows the procedure for executing the program/erase control program when transferred to on-chip RAM.

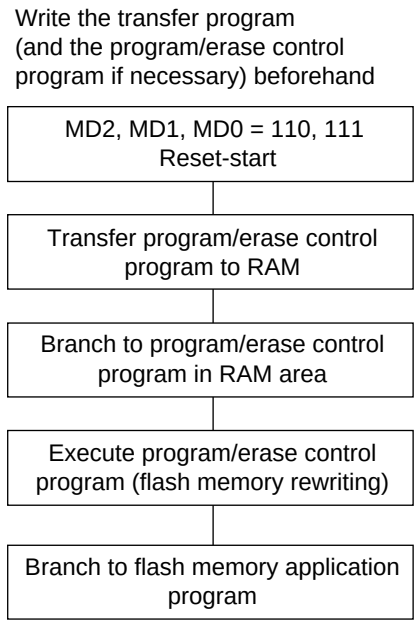

Note: The watchdog timer should be activated to prevent overprogramming or overerasing due to program runaway, etc.

Figure 19-47 User Program Mode Execution Procedure

19.18 Programming/Erasing Flash Memory

In the on-board programming modes, flash memory programming and erasing is performed by software, using the CPU. There are four flash memory operating modes: program mode, erase mode, program-verify mode, and erase-verify mode. Transitions to these modes can be made by setting the PSU, ESU, P, E, PV, and EV bits in FLMCR1.

The flash memory cannot be read while being programmed or erased. Therefore, the program that controls flash memory programming/erasing (the programming control program) should be located and executed in on-chip RAM or external memory. When the program is located in external memory, an instruction for programming the flash memory and the following instruction should be located in on-chip RAM. The DMAC or DTC should not be activated before or after the instruction for programming the flash memory is executed.

Notes: 1. Operation is not guaranteed if setting/resetting of the SWE, ESU, PSU, EV, PV, E, and P bits in FLMCR1 is executed by a program in flash memory.
2. Perform programming in the erased state. Do not perform additional programming on previously programmed addresses.

19.18.1 Program Mode

Follow the procedure shown in the program/program-verify flowchart in figure 19-48 to write data or programs to flash memory. Performing program operations according to this flowchart will enable data or programs to be written to flash memory without subjecting the device to voltage stress or sacrificing program data reliability. Programming should be carried out 128 bytes at a time.

For the wait times (x, y, z1, z2, z3 α, ß, γ, ε, η, and θ) after bits are set or cleared in flash memory control register 1 (FLMCR1) and the maximum number of programming operations (N), see section 22.3.6, Flash Memory Characteristics.

Following the elapse of (x) μs or more after the SWE bit is set to 1 in flash memory control register 1 (FLMCR1), 128-byte program data is stored in the program data area and reprogram data area, and the 128-byte data in the reprogram data area is written consecutively to the write addresses. The lower 8 bits of the first address written to must be H'00 or H'80. 128 consecutive byte data transfers are performed. The program address and program data are latched in the flash memory. A 128-byte data transfer must be performed even if writing fewer than 128 bytes; in this case, H'FF data must be written to the extra addresses.

Next, the watchdog timer is set to prevent overprogramming in the event of program runaway, etc. Set a value greater than (y + z2 + α + β) μs as the WDT overflow period. After this, preparation for program mode (program setup) is carried out by setting the PSU bit in FLMCR1, and after the elapse of (y) μs or more, the operating mode is switched to program mode by setting the P bit in FLMCR1. The time during which the P bit is set is the flash memory programming time. Set the programming time according to the table in the programming flowchart in figure 19-48.

19.18.2 Program-Verify Mode

In program-verify mode, the data written in program mode is read to check whether it has been correctly written in the flash memory.

After the elapse of a given programming time, the programming mode is exited (the P bit in FLMCR1 is cleared to 0, then the PSU bit is cleared to 0 at least (α) μs later). Next, the watchdog timer is cleared after the elapse of (β) μs or more, and the operating mode is switched to program-verify mode by setting the PV bit in FLMCR1. Before reading in program-verify mode, a dummy write of H'FF data should be made to the addresses to be read. The dummy write should be executed after the elapse of (γ) μs or more. When the flash memory is read in this state (verify data is read in 16-bit units), the data at the latched address is read. Wait at least (ε) μs after the dummy write before performing this read operation. Next, the originally written data is compared with the verify data, and reprogram data is computed (see figure 19-48) and transferred to the reprogram data area. After 128 bytes of data have been verified, exit program-verify mode in FLMCR1 to 0, and wait again for at least (θ) μs. If reprogramming is necessary, set program mode again, and repeat the

program/program-verify sequence as before. However, ensure that the program/program-verify sequence is not repeated more than (N) times on the same bits.

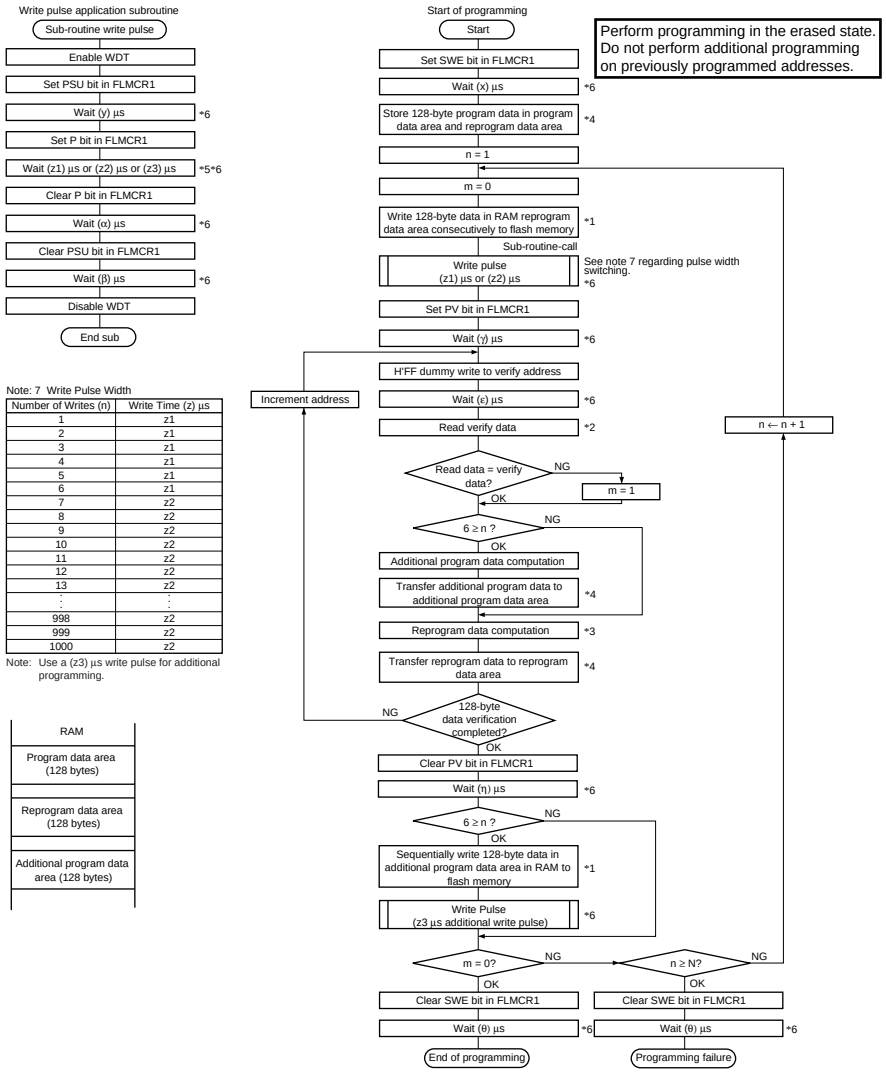

Note: 7 Write Pulse Width

Number of Writes (n)	Write Time (z) µs
1	z1
2	z1
3	z1
4	z1
5	z1
6	z1
7	z2
8	z2
9	z2
10	z2
11	z2
12	z2
13	z2
:	:
998	z2
999	z2
1000	z2

Note: Use a (z3) µs write pulse for additional programming.

Notes:
1. Data transfer is performed by byte transfer. The lower 8 bits of the first address written to must be H'00 or H'80. A 128-byte data transfer must be performed even if writing fewer than 128 bytes; in this case, H'FF data must be written to the extra addresses.
2. Verify data is read in 16-bit (W) units.
3. Even bits for which programming has been completed in the 128-byte programming loop will be subjected to additional programming if they fail the subsequent verify operation.
4. A 128-byte area for storing program data, a 128-byte area for storing reprogram data, and a 128-byte area for storing additional program data should be provided in RAM. The contents of the reprogram data and additional program data areas are modified as programming proceeds.
5. A write pulse of (z1) or (z2) µs should be applied according to the progress of programming. See note 7 for the pulse widths. When the additional program data is programmed, a write pulse of (z3) µs should be applied. Reprogram data X' stands for reprogram data to which a write pulse has been applied.
6. For the values of x, y, z1, z2, z3, α, β, γ, ε, η, θ, and N, see section 22.3.6, the Flash Memory Characteristics.

Program Data Operation Chart

Original Data (D)	Verify Data (V)	Reprogram Data (X)	Comments
0	0	1	Programming completed
	1	0	Programming incomplete; reprogram
1	0	1	
	1		Still in erased state; no action

Additional Program Data Operation Chart

Reprogram Data (X')	Verify Data (V)	Additional Program Data (Y)	Comments
0	0	0	Additional programming executed
	1	1	Additional programming not executed
1	0		Additional programming not executed
	1		Additional programming not executed

Figure 19-48 Program/Program-Verify Flowchart

19.18.3 Erase Mode

Flash memory erasing should be performed block by block following the procedure shown in the erase/erase-verify flowchart (single-block erase) shown in figure 19-49.

For the wait times (x, y, z, α, ß, γ, ε, η, θ) after bits are set or cleared in flash memory control register 1 (FLMCR1) and the maximum number of programming operations (N), see section 22.3.6, Flash Memory Characteristics.

To perform data or program erasure, make a 1 bit setting for the flash memory area to be erased in erase block register 1 or 2 (EBR1 or EBR2) at least (x) μs after setting the SWE bit to 1 in flash memory control register 1 (FLMCR1). Next, the watchdog timer is set to prevent overerasing in the event of program runaway, etc. Set a value greater than (y + z + α + ß) ms as the WDT overflow period. After this, preparation for erase mode (erase setup) is carried out by setting the ESU bit in FLMCR1, and after the elapse of (y) μs or more, the operating mode is switched to erase mode by setting the E bit in FLMCR1. The time during which the E bit is set is the flash memory erase time. Ensure that the erase time does not exceed (z) ms.

Note: With flash memory erasing, prewriting (setting all data in the memory to be erased to 0) is not necessary before starting the erase procedure.

19.18.4 Erase-Verify Mode

In erase-verify mode, data is read after memory has been erased to check whether it has been correctly erased.

After the elapse of the erase time, erase mode is exited (the E bit in FLMCR1 is cleared to 0, then the ESU bit in FLMCR1 is cleared to 0 at least (α) μs later), the watchdog timer is cleared after the elapse of (β) μs or more, and the operating mode is switched to erase-verify mode by setting the EV bit in FLMCR1. Before reading in erase-verify mode, a dummy write of H'FF data should be made to the addresses to be read. The dummy write should be executed after the elapse of (γ) μs or more. When the flash memory is read in this state (verify data is read in 16-bit units), the data at the latched address is read. Wait at least (ε) μs after the dummy write before performing this read operation. If the read data has been erased (all 1), a dummy write is performed to the next address, and erase-verify is performed. If the read data has not been erased, set erase mode again, and repeat the erase/erase-verify sequence in the same way. However, ensure that the erase/erase-verify sequence is not repeated more than (N) times. When verification is completed, exit erase-verify mode, and wait for at least (η) μs. If erasure has been completed on all the erase blocks, clear the SWE bit in FLMCR1 to 0 and wait for at least (θ) μs. If there are any unerased blocks, make a 1 bit setting for the flash memory area to be erased, and repeat the erase/erase-verify sequence in the same way.

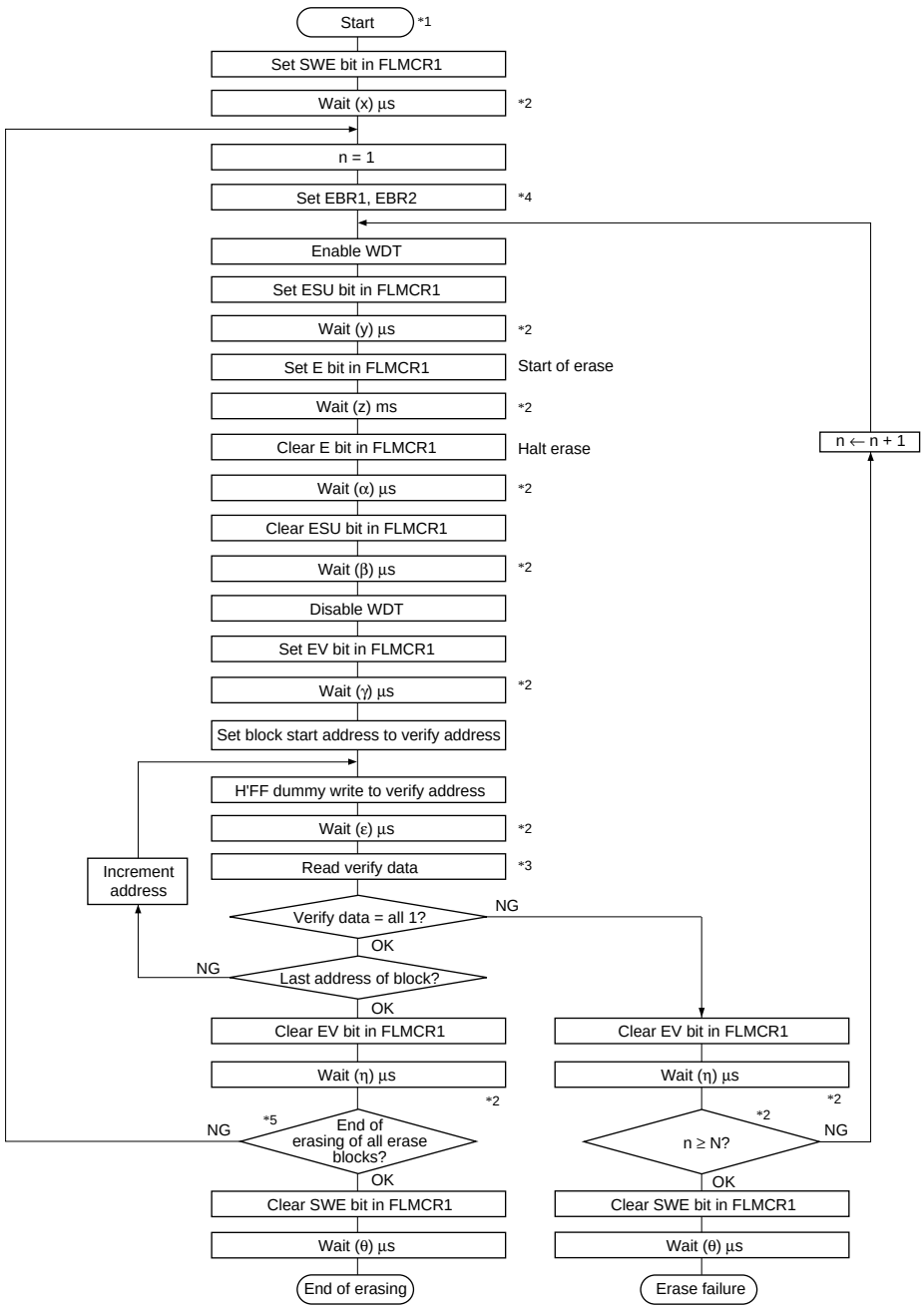

Notes: 1. Prewriting (setting erase block data to all 0) is not necessary.
2. The values of x, y, z, α, β, γ, ε, η, θ, and N are shown in section 22.3.6, Flash Memory Characteristics.
3. Verify data is read in 16-bit (W) units.
4. Set only one bit in EBR1or EBR2. More than one bit cannot be set.
5. Erasing is performed in block units. To erase a number of blocks, the individual blocks must be erased sequentially.

Figure 19-49 Erase/Erase-Verify Flowchart

19.19 Flash Memory Protection

There are three kinds of flash memory program/erase protection: hardware protection, software protection, and error protection.

19.19.1 Hardware Protection

Hardware protection refers to a state in which programming/erasing of flash memory is forcibly disabled or aborted. Settings in flash memory control registers 1 and 2 (FLMCR1, FLMCR2) and erase block registers 1 and 2 (EBR1, EBR2) are reset. (See table 19-37.)

Table 19-37 Hardware Protection

		Functions	
Item	**Description**	**Program**	**Erase**
Reset/standby protection	• In a reset (including a WDT overflow reset) and in standby mode, FLMCR1, FLMCR2, EBR1, and EBR2 are initialized, and the program/erase-protected state is entered. • In a reset via the $\overline{\text{RES}}$ pin, the reset state is not entered unless the $\overline{\text{RES}}$ pin is held low until oscillation stabilizes after powering on. In the case of a reset during operation, hold the $\overline{\text{RES}}$ pin low for the $\overline{\text{RES}}$ pulse width specified in the AC Characteristics section.	Yes	Yes

19.19.2 Software Protection

Software protection can be implemented by setting the SWE bit in flash memory control register 1 (FLMCR1), erase block registers 1 and 2 (EBR1, EBR2), and the RAMS bit in the RAM emulation register (RAMER). When software protection is in effect, setting the P or E bit in FLMCR1 does not cause a transition to program mode or erase mode. (See table 19-38.)

Table 19-38 Software Protection

		Functions	
Item	**Description**	**Program**	**Erase**
SWE bit protection	• Clearing the SWE bit to 0 in FLMCR1 sets the program/erase-protected state for all blocks (Execute in on-chip RAM or external memory.)	Yes	Yes
Block specification protection	• Erase protection can be set for individual blocks by settings in erase block registers 1 and 2 (EBR1, EBR2). • Setting EBR1 and EBR2 to H'00 places all blocks in the erase-protected state.	—	Yes
Emulation protection	• Setting the RAMS bit to 1 in the RAM emulation register (RAMER) places all blocks in the program/erase-protected state.	Yes	Yes

19.19.3 Error Protection

In error protection, an error is detected when MCU runaway occurs during flash memory programming/erasing, or operation is not performed in accordance with the program/erase algorithm, and the program/erase operation is aborted. Aborting the program/erase operation prevents damage to the flash memory due to overprogramming or overerasing.

If the MCU malfunctions during flash memory programming/erasing, the FLER bit is set to 1 in FLMCR2 and the error protection state is entered. The FLMCR1, FLMCR2, EBR1, and EBR2 settings are retained, but program mode or erase mode is aborted at the point at which the error occurred. Program mode or erase mode cannot be re-entered by re-setting the P or E bit. However, PV and EV bit setting is enabled, and a transition can be made to verify mode.

FLER bit setting conditions are as follows:

- When flash memory is read during programming/erasing (including a vector read or instruction fetch)
- Immediately after exception handling (excluding a reset) during programming/erasing
- When a SLEEP instruction (including software standby) is executed during programming/erasing
- When the CPU loses the bus during programming/erasing

Error protection is released only by a reset and in hardware standby mode.

Figure 19-50 shows the flash memory state transition diagram.

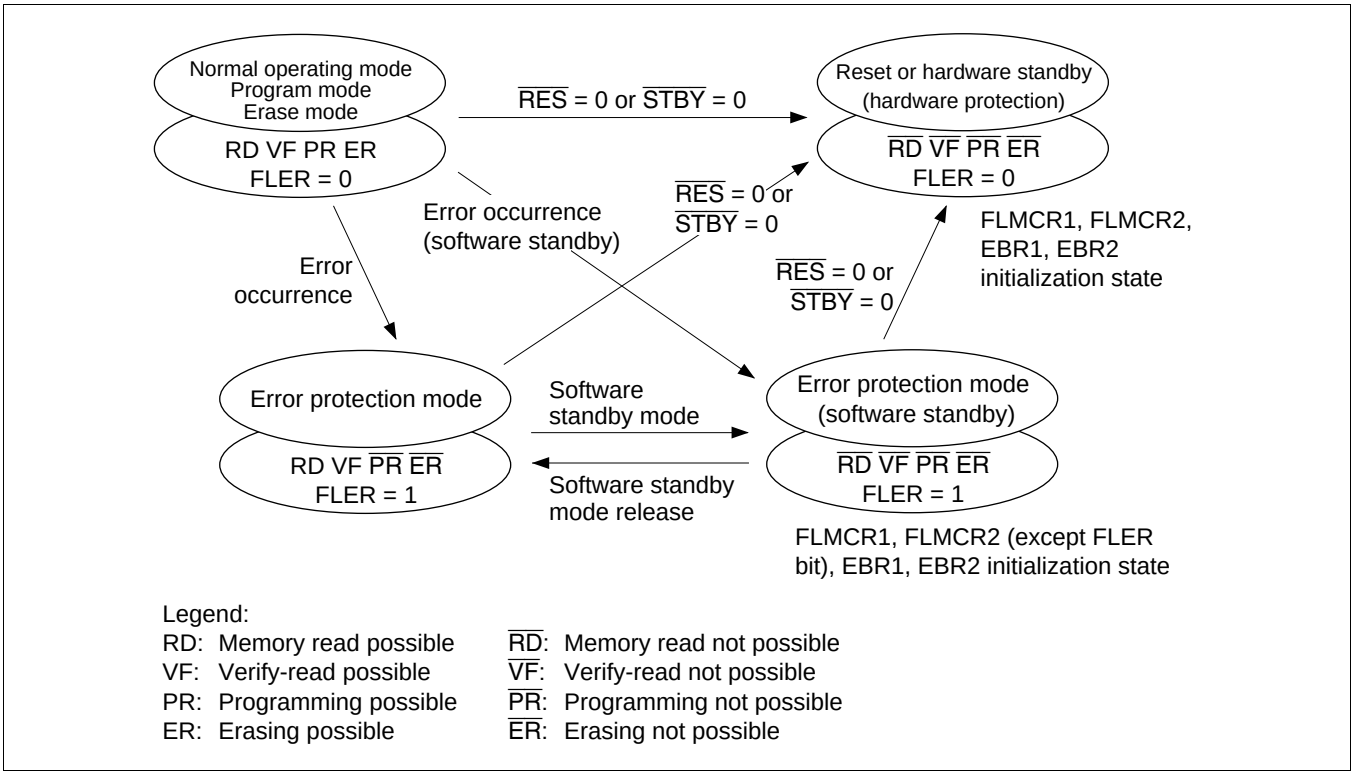

Figure 19-50 Flash Memory State Transitions

19.20 Flash Memory Emulation in RAM

19.20.1 Emulation in RAM

Making a setting in the RAM emulation register (RAMER) enables part of RAM to be overlapped onto the flash memory area so that data to be written to flash memory can be emulated in RAM in real time. After the RAMER setting has been made, accesses can be made from the flash memory area or the RAM area overlapping flash memory. Emulation can be performed in user mode and user program mode. Figure 19-51 shows an example of emulation of real-time flash memory programming.

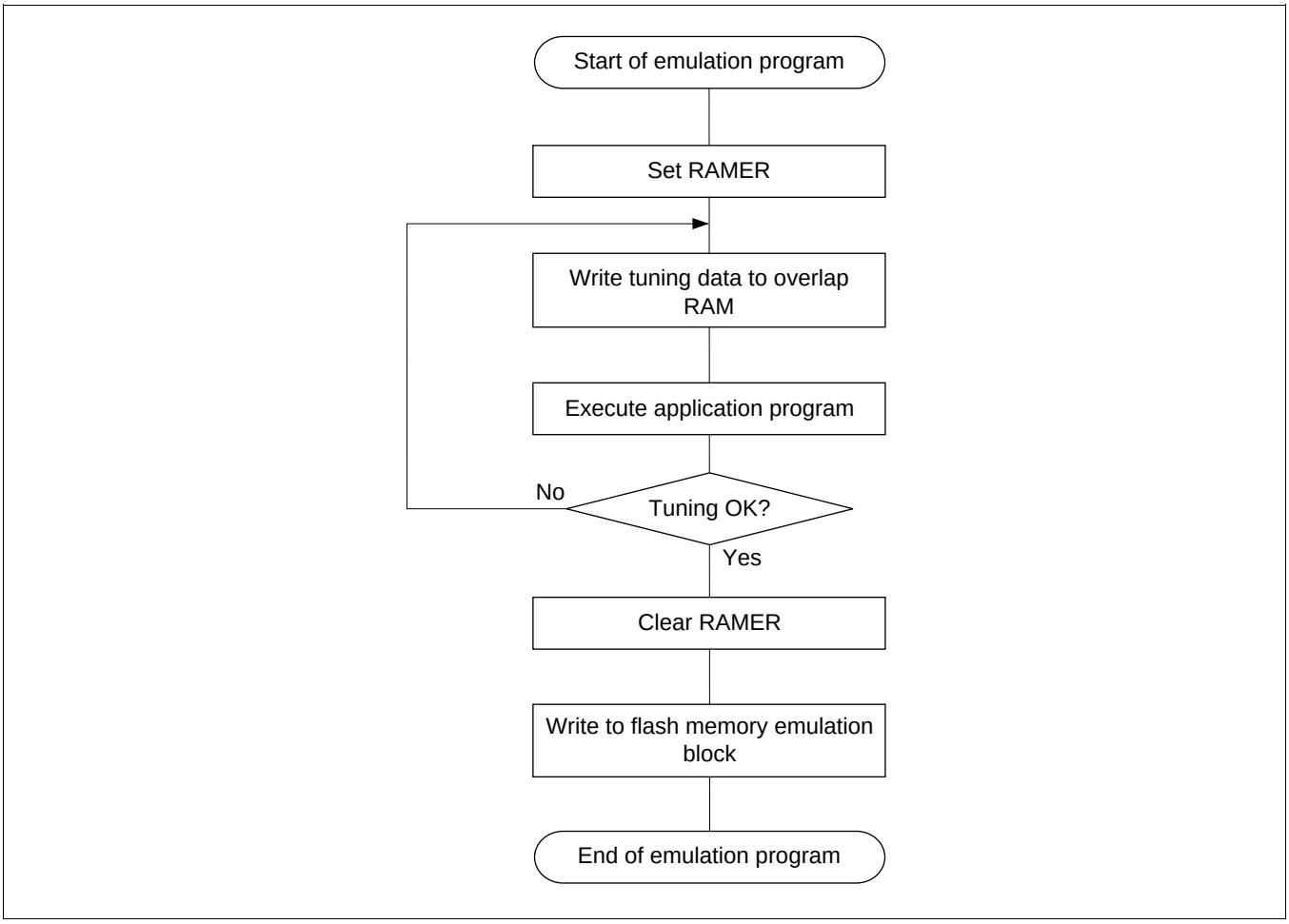

Figure 19-51 Flowchart for Flash Memory Emulation in RAM

19.20.2 RAM Overlap

An example in which flash memory block area EB1 is overlapped is shown below.

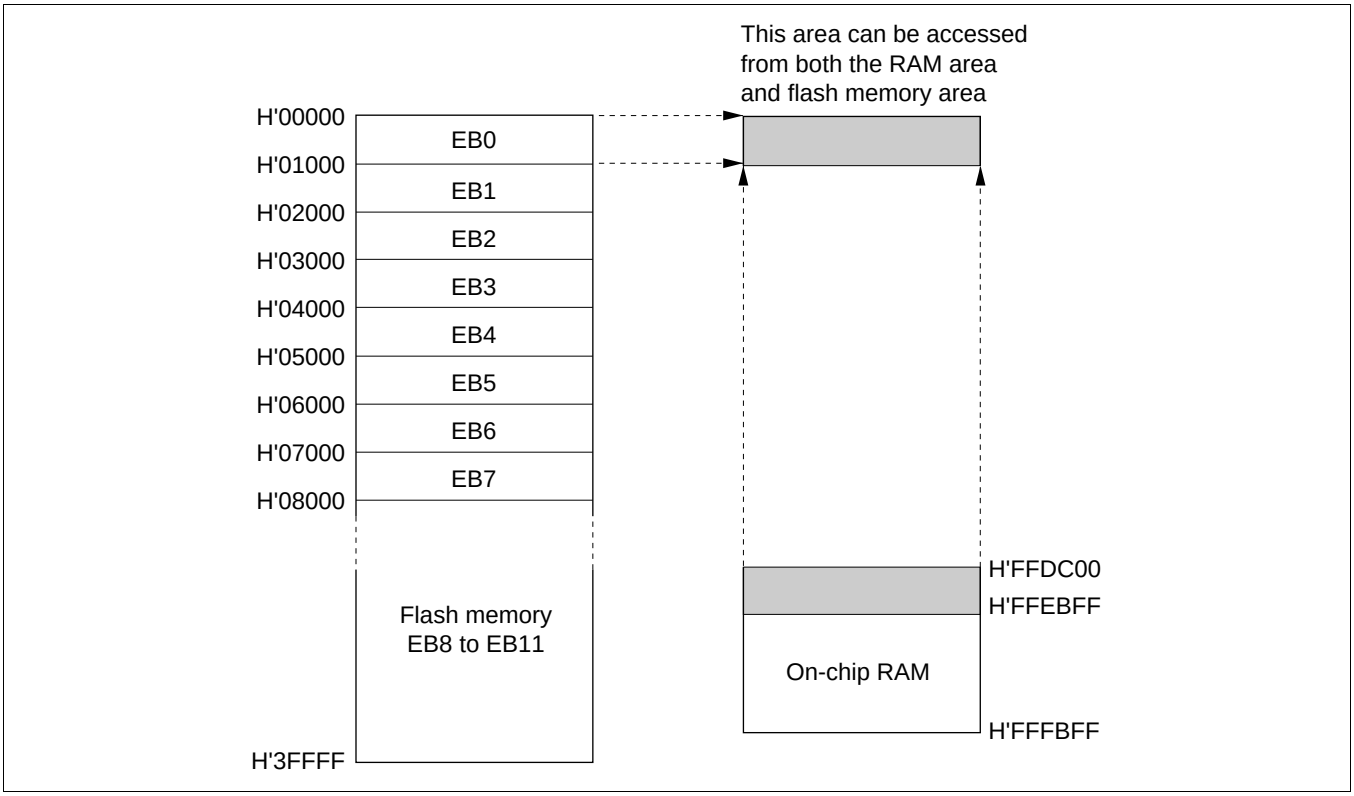

Figure 19-52 Example of RAM Overlap Operation

Example in Which Flash Memory Block Area EB1 is Overlapped

1. Set bits RAMS, RAM2, RAM1, and RAM0 in RAMER to 1, 0, 0, 1, to overlap part of RAM onto the area (EB1) for which real-time programming is required.
2. Real-time programming is performed using the overlapping RAM.
3. After the program data has been confirmed, the RAMS bit is cleared, releasing RAM overlap.
4. The data written in the overlapping RAM is written into the flash memory space (EB1).

Notes: 1. When the RAMS bit is set to 1, program/erase protection is enabled for all blocks regardless of the value of RAM2, RAM1, and RAM0 (emulation protection). In this state, setting the P or E bit in flash memory control register 1 (FLMCR1) will not cause a transition to program mode or erase mode. When actually programming a flash memory area, the RAMS bit should be cleared to 0.

2. A RAM area cannot be erased by execution of software in accordance with the erase algorithm while flash memory emulation in RAM is being used.
3. Block area EB0 includes the vector table. When performing RAM emulation, the vector table is needed by the overlap RAM.

19.21 Interrupt Handling when Programming/Erasing Flash Memory

All interrupts, including NMI input, are disabled when flash memory is being programmed or erased (when the P or E bit is set in FLMCR1), and while the boot program is executing in boot mode*[1], to give priority to the program or erase operation. There are three reasons for this:

1. Interrupt during programming or erasing might cause a violation of the programming or erasing algorithm, with the result that normal operation could not be assured.
2. In the interrupt exception handling sequence during programming or erasing, the vector would not be read correctly*[2], possibly resulting in MCU runaway.
3. If an interrupt occurred during boot program execution, it would not be possible to execute the normal boot mode sequence.

For these reasons, in on-board programming mode alone there are conditions for disabling interrupts, as an exception to the general rule. However, this provision does not guarantee normal erasing and programming or MCU operation. All interrupt requests, including NMI, must therefore be restricted inside and outside the MCU when programming or erasing flash memory. The NMI interrupt is also disabled in the error-protection state while the P or E bit remains set in FLMCR1.

Notes: 1. Interrupt requests must be disabled inside and outside the MCU until the programming control program has completed programming.
2. The vector may not be read correctly in this case for the following two reasons:
   - If flash memory is read while being programmed or erased (while the P or E bit is set in FLMCR1), correct read data will not be obtained (undetermined values will be returned).
   - If the interrupt entry in the vector table has not been programmed yet, interrupt exception handling will not be executed correctly.

19.22 Flash Memory Programmer Mode

19.22.1 Programmer Mode Setting

Programs and data can be written and erased in programmer mode as well as in the on-board programming modes. In programmer mode, the on-chip ROM can be freely programmed using a PROM programmer that supports the Renesas Technology microcomputer device type with 256-kbyte on-chip flash memory (FZTAT256V5A). Flash memory read mode, auto-program mode, auto-erase mode, and status read mode are supported with this device type. In auto-program mode, auto-erase mode, and status read mode, a status polling procedure is used, and in status read mode, detailed internal signals are output after execution of an auto-program or auto-erase operation.

Table 19-39 shows programmer mode pin settings.

Table 19-39 Programmer Mode Pin Settings

Pin Names	Settings/External Circuit Connection
Mode pins: MD2, MD1, MD0	Low-level input
Mode setting pins: P66, P65, P64	High-level input to P66, low-level input to P65 and P64
$\overline{\text{STBY}}$ pin	High-level input (do not select hardware standby mode)
$\overline{\text{RES}}$ pin	Reset circuit
XTAL, EXTAL pins	Oscillator circuit
Other pins requiring setting: P32, P25	High-level input to P32, low-level input to P25

19.22.2 Socket Adapters and Memory Map

In programmer mode, a socket adapter is connected to the chip as shown in figure 19-54. Figure 19-53 shows the on-chip ROM memory map and figure 19-54 show the socket adapter pin assignments.

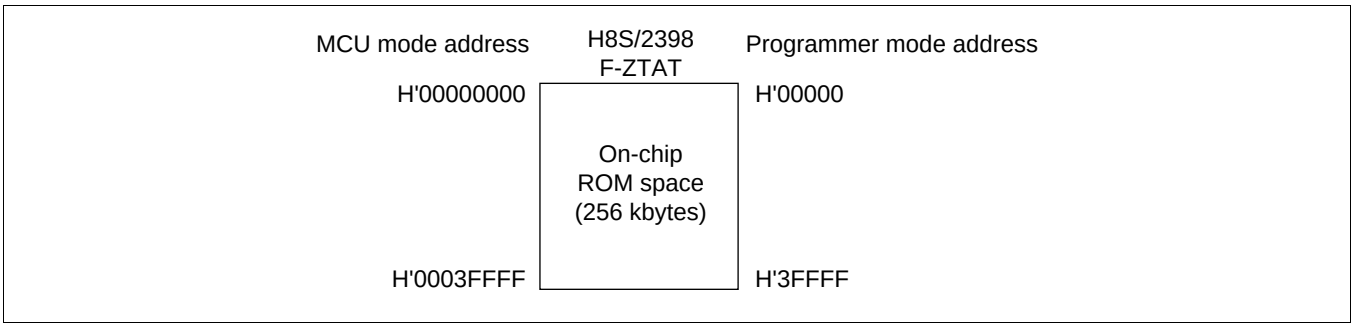

Figure 19-53 Memory Map in Programmer Mode

H8S/2398 F-ZTAT			Socket Adapter (40-Pin Conversion)	HN27C4096HG (40 Pins)	
TFP-120	FP-128B	Pin Name		Pin No.	Pin Name
2	6	A_0		21	A_0
3	7	A_1		22	A_1
4	8	A_2		23	A_2
5	9	A_3		24	A_3
7	11	A_4		25	A_4
8	12	A_5		26	A_5
9	13	A_6		27	A_6
10	14	A_7		28	A_7
11	15	A_8		29	A_8
12	16	A_9		31	A_9
13	17	A_{10}		32	A_{10}
14	18	A_{11}		33	A_{11}
16	20	A_{12}		34	A_{12}
17	21	A_{13}		35	A_{13}
18	22	A_{14}		36	A_{14}
19	23	A_{15}		37	A_{15}
20	24	A_{16}		38	A_{16}
21	25	A_{17}		39	A_{17}
22	26	A_{18}		10	A_{18}
43	49	D_8		19	I/O_0
44	50	D_9		18	I/O_1
45	51	D_{10}		17	I/O_2
46	52	D_{11}		16	I/O_3
48	54	D_{12}		15	I/O_4
49	55	D_{13}		14	I/O_5
50	56	D_{14}		13	I/O_6
51	57	D_{15}		12	I/O_7
68	76	$\overline{CE}$		2	$\overline{CE}$
69	77	$\overline{OE}$		20	$\overline{OE}$
67	75	$\overline{WE}$		3	$\overline{WE}$
72	80	V_{CL} *3	Capacitor	4	FWE
1, 30, 33, 52, 55,74, 75, 76, 81, 93, 94	5, 34, 39, 58, 61, 82, 83, 84, 89, 103, 104	V_{CC}		1, 40	V_{CC}
				11, 30	V_{SS}
6, 15, 24, 31, 32, 38, 47, 59, 66, 79, 103, 104, 113, 114, 115	3, 10, 19, 28, 35, 36, 37, 38, 44, 53, 65, 67, 68, 74, 87, 99, 100, 113, 114, 123, 124, 125	V_{SS}		5, 6, 7	NC
				8	A_{20}
				9	A_{19}
73	81	$\overline{RES}$	Reset circuit *1		
77	85	XTAL	Oscillation circuit *2		
78	86	EXTAL			
Other pins		NC (OPEN)			

Legend:
I/O_7 to I/O_0: Data input/output
A_{18} to A_0: Address input
$\overline{CE}$: Chip enable
$\overline{OE}$: Output enable
$\overline{WE}$: Write enable

Notes: 1. A reset oscillation stabilization time (t_{osc1}) of at least 10 ms is required.
2. A 12 MHz crystal resonator should be used.
3. The V_{CL} pin should be connected to V_{SS} by using a capacitor of 0.47 µF.

This figure shows pin assignments, and does not show the entire socket adapter circuit.

Figure 19-54 H8S/2398 F-ZTAT Socket Adapter Pin Assignments

19.22.3 Programmer Mode Operation

Table 19-40 shows how the different operating modes are set when using programmer mode, and table 19-41 lists the commands used in programmer mode. Details of each mode are given below.

Memory Read Mode: Memory read mode supports byte reads.

Auto-Program Mode: Auto-program mode supports programming of 128 bytes at a time. Status polling is used to confirm the end of auto-programming.

Auto-Erase Mode: Auto-erase mode supports automatic erasing of the entire flash memory. Status polling is used to confirm the end of auto-erasing.

Status Read Mode: Status polling is used for auto-programming and auto-erasing, and normal termination can be confirmed by reading the I/O_6 signal. In status read mode, error information is output if an error occurs.

Table 19-40 Settings for Each Operating Mode in Programmer Mode

	Pin Names				
Mode	**$\overline{CE}$**	**$\overline{OE}$**	**$\overline{WE}$**	**I/O_7 to I/O_0**	**A_{18} to A_0**
Read	L	L	H	Data output	Ain
Output disable	L	H	H	Hi-Z	×
Command write	L	H	L	Data input	Ain*[2]
Chip disable*[1]	H	×	×	Hi-Z	×

Legend:
H: High level
L: Low level
Hi-Z: High impedance
×: Don't care
Notes: 1. Chip disable is not a standby state; internally, it is an operation state.
2. Ain indicates that there is also address input in auto-program mode.

Table 19-41 Programmer Mode Commands

	Number	1st Cycle			2nd Cycle		
Command Name	**of Cycles**	**Mode**	**Address**	**Data**	**Mode**	**Address**	**Data**
Memory read mode	1 + n	Write	×	H'00	Read	RA	Dout
Auto-program mode	129	Write	×	H'40	Write	PA	Din
Auto-erase mode	2	Write	×	H'20	Write	×	H'20
Status read mode	2	Write	×	H'71	Write	×	H'71

Legend:
RA: Read address
PA: Program address
×: Don't care
Notes: 1. In auto-program mode, 129 cycles are required for command writing by a simultaneous 128-byte write.
2. In memory read mode, the number of cycles depends on the number of address write cycles (n).

19.22.4 Memory Read Mode

- After the end of an auto-program, auto-erase, or status read operation, the command wait state is entered. To read memory contents, a transition must be made to memory read mode by means of a command write before the read is executed.
- Command writes can be performed in memory read mode, just as in the command wait state.
- Once memory read mode has been entered, consecutive reads can be performed.
- After power-on, memory read mode is entered.

Table 19-42 AC Characteristics in Memory Read Mode

Conditions: V_{CC} = 5.0 V ±10%, V_{SS} = 0 V, T_a = 25°C ±5°C

Item	Symbol	Min	Max	Unit
Command write cycle	t_{nxtc}	20	—	µs
$\overline{CE}$ hold time	t_{ceh}	0	—	ns
$\overline{CE}$ setup time	t_{ces}	0	—	ns
Data hold time	t_{dh}	50	—	ns
Data setup time	t_{ds}	50	—	ns
Write pulse width	t_{wep}	70	—	ns
$\overline{WE}$ rise time	t_r	—	30	ns
$\overline{WE}$ fall time	t_f	—	30	ns

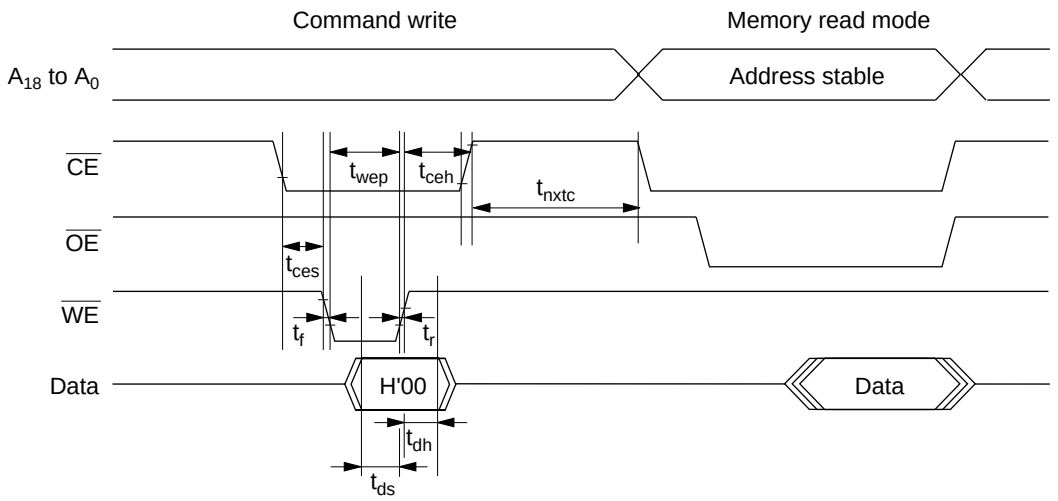

Note: Data is latched at the rising edge of $\overline{WE}$.

Figure 19-55 Memory Read Mode Timing Waveforms after Command Write

Table 19-43 AC Characteristics when Entering Another Mode from Memory Read Mode

Conditions: V_{CC} = 5.0 V ±10%, V_{SS} = 0 V, T_a = 25°C ±5°C

Item	Symbol	Min	Max	Unit
Command write cycle	t_{nxtc}	20	—	µs
$\overline{CE}$ hold time	t_{ceh}	0	—	ns
$\overline{CE}$ setup time	t_{ces}	0	—	ns
Data hold time	t_{dh}	50	—	ns
Data setup time	t_{ds}	50	—	ns
Write pulse width	t_{wep}	70	—	ns
$\overline{WE}$ rise time	t_r	—	30	ns
$\overline{WE}$ fall time	t_f	—	30	ns

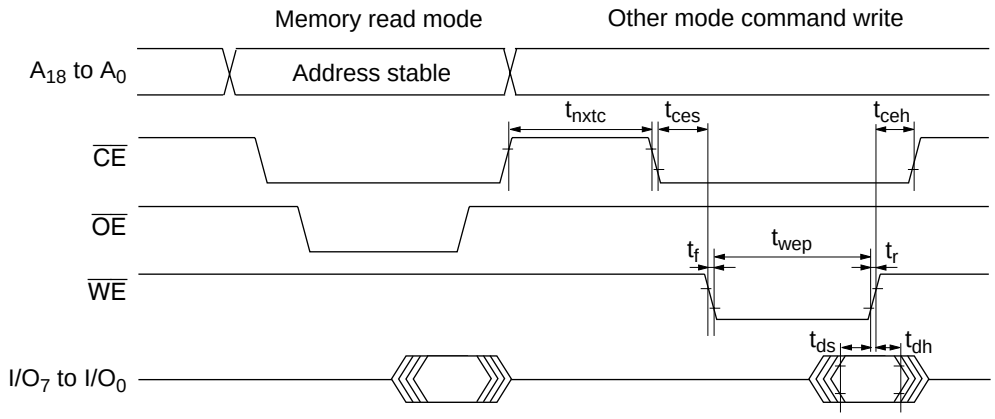

Note: Do not enable $\overline{WE}$ and $\overline{OE}$ at the same time.

Figure 19-56 Timing Waveforms when Entering Another Mode from Memory Read Mode

Table 19-44 AC Characteristics in Memory Read Mode

Conditions: V_{CC} = 5.0 V ±10%, V_{SS} = 0 V, T_a = 25°C ±5°C

Item	Symbol	Min	Max	Unit
Access time	t_{acc}	—	20	µs
$\overline{CE}$ output delay time	t_{ce}	—	150	ns
$\overline{OE}$ output delay time	t_{oe}	—	150	ns
Output disable delay time	t_{df}	—	100	ns
Data output hold time	t_{oh}	5	—	ns

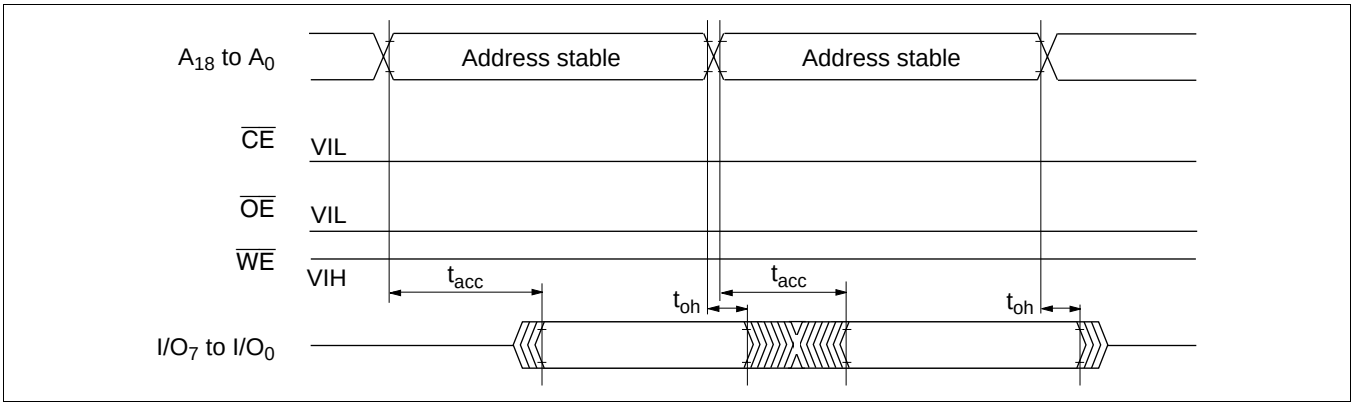

Figure 19-57 Timing Waveforms for $\overline{CE}$/$\overline{OE}$ Enable State Read

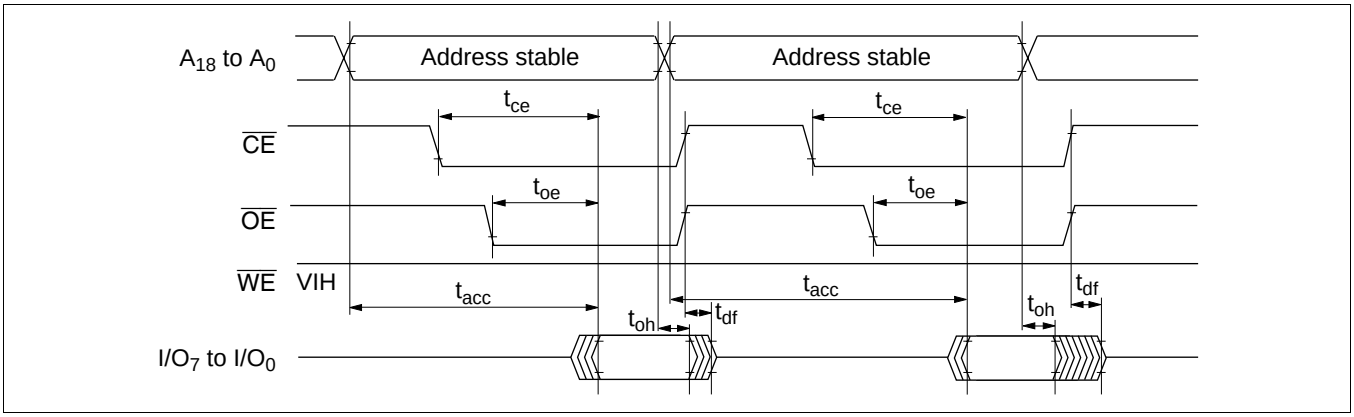

Figure 19-58 Timing Waveforms for $\overline{CE}$/$\overline{OE}$ Clocked Read

19.22.5 Auto-Program Mode

- In auto-program mode, 128 bytes are programmed simultaneously. For this purpose, 128 consecutive byte data transfers should be performed.
- A 128-byte data transfer must be performed even if writing fewer than 128 bytes; in this case, H'FF data must be written to the extra addresses.
- The lower 7 bits of the transfer address must be held low. If an invalid address is input, memory programming will be started but a programming error will occur.
- Memory address transfer is executed in the second cycle (figure 19-59). Do not perform transfer later than the second cycle.
- Do not perform a command write during a programming operation.
- Perform one auto-programming operation for a 128-byte block for each address. One or more additional programming operations cannot be carried out on address blocks that have already been programmed.
- Confirm normal end of auto-programming by checking I/O_6. Alternatively, status read mode can also be used for this purpose (the I/O_7 status polling pin is used to identify the end of an auto-program operation).
- Status polling I/O_6 and I/O_7 information is retained until the next command write. As long as the next command write has not been performed, reading is possible by enabling $\overline{CE}$ and $\overline{OE}$.

AC Characteristics

Table 19-45 AC Characteristics in Auto-Program Mode

Conditions: V_{CC} = 5.0 V ±10%, V_{SS} = 0 V, T_a = 25°C ±5°C

Item	Symbol	Min	Max	Unit
Command write cycle	t_{nxtc}	20	—	µs
$\overline{CE}$ hold time	t_{ceh}	0	—	ns
$\overline{CE}$ setup time	t_{ces}	0	—	ns
Data hold time	t_{dh}	50	—	ns
Data setup time	t_{ds}	50	—	ns
Write pulse width	t_{wep}	70	—	ns
Status polling start time	t_{wsts}	1	—	ms
Status polling access time	t_{spa}	—	150	ns
Address setup time	t_{as}	0	—	ns
Address hold time	t_{ah}	60	—	ns
Memory write time	t_{write}	1	3000	ms
$\overline{WE}$ rise time	t_r	—	30	ns
$\overline{WE}$ fall time	t_f	—	30	ns

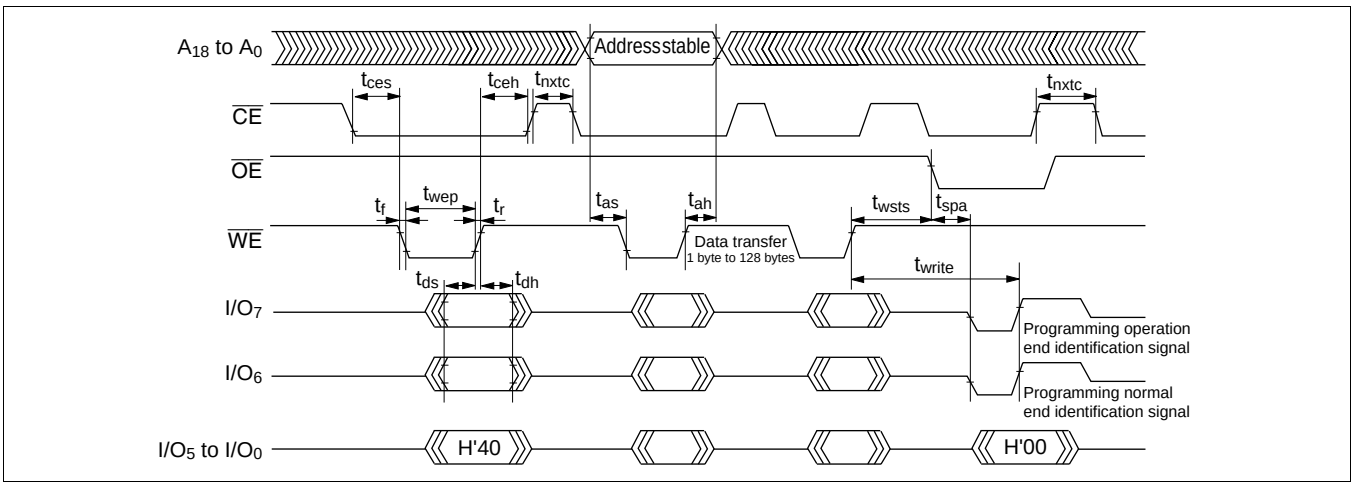

Figure 19-59 Auto-Program Mode Timing Waveforms

19.22.6 Auto-Erase Mode

- Auto-erase mode supports only total memory erasing.
- Do not perform a command write during auto-erasing.
- Confirm normal end of auto-erasing by checking I/O_6. Alternatively, status read mode can also be used for this purpose (the I/O_7 status polling pin is used to identify the end of an auto-erase operation).
- Status polling I/O_6 and I/O_7 pin information is retained until the next command write. As long as the next command write has not been performed, reading is possible by enabling $\overline{CE}$ and $\overline{OE}$.

AC Characteristics

Table 19-46 AC Characteristics in Auto-Erase Mode

Conditions: V_{CC} = 5.0 V ±10%, V_{SS} = 0 V, T_a = 25°C ±5°C

Item	Symbol	Min	Max	Unit
Command write cycle	t_{nxtc}	20	—	µs
$\overline{CE}$ hold time	t_{ceh}	0	—	ns
$\overline{CE}$ setup time	t_{ces}	0	—	ns
Data hold time	t_{dh}	50	—	ns
Data setup time	t_{ds}	50	—	ns
Write pulse width	t_{wep}	70	—	ns
Status polling start time	t_{ests}	1	—	ms
Status polling access time	t_{spa}	—	150	ns
Memory erase time	t_{erase}	100	40000	ms
$\overline{WE}$ rise time	t_r	—	30	ns
$\overline{WE}$ fall time	t_f	—	30	ns

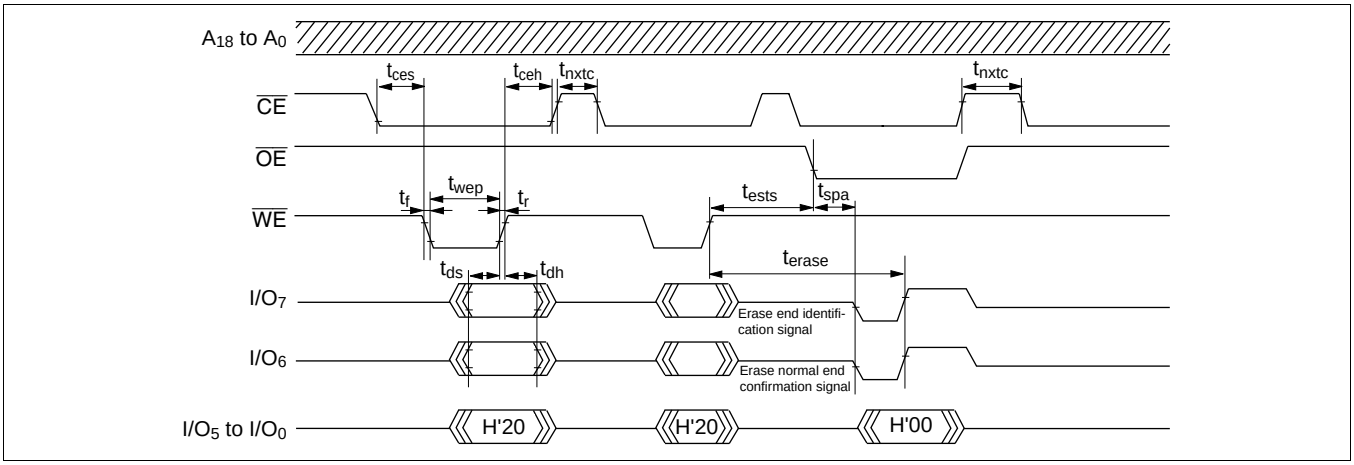

Figure 19-60 Auto-Erase Mode Timing Waveforms

19.22.7 Status Read Mode

- Status read mode is used to identify what type of abnormal end has occurred. Use this mode when an abnormal end occurs in auto-program mode or auto-erase mode.
- The return code is retained until a command write for other than status read mode is performed.

Table 19-47 AC Characteristics in Status Read Mode

Conditions: V_{CC} = 5.0 V ±10%, V_{SS} = 0 V, T_a = 25°C ±5°C

Item	Symbol	Min	Max	Unit
Command write cycle	t_{nxtc}	20	—	µs
$\overline{CE}$ hold time	t_{ceh}	0	—	ns
$\overline{CE}$ setup time	t_{ces}	0	—	ns
Data hold time	t_{dh}	50	—	ns
Data setup time	t_{ds}	50	—	ns
Write pulse width	t_{wep}	70	—	ns
$\overline{OE}$ output delay time	t_{oe}	—	150	ns
Disable delay time	t_{df}	—	100	ns
$\overline{CE}$ output delay time	t_{ce}	—	150	ns
$\overline{WE}$ rise time	t_r	—	30	ns
$\overline{WE}$ fall time	t_f	—	30	ns

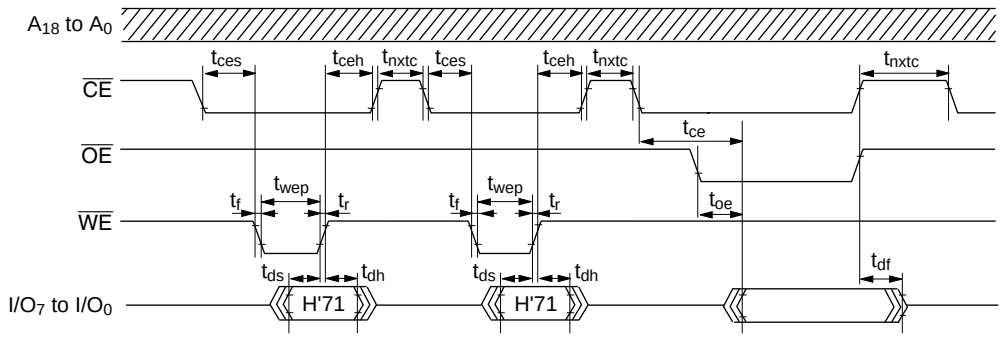

Note: I/O_3 and I/O_2 are undefined.

Figure 19-61 Status Read Mode Timing Waveforms

Table 19-48 Status Read Mode Return Commands

Pin Name	I/O_7	I/O_6	I/O_5	I/O_4	I/O_3	I/O_2	I/O_1	I/O_0
Attribute	Normal end identification	Command error	Program-ming error	Erase error	—	—	Program-ming or erase count exceeded	Effective address error
Initial value	0	0	0	0	0	0	0	0
Indications	Normal end: 0 Abnormal end: 1	Command error: 1 Otherwise: 0	Program-ming error: 1 Otherwise: 0	Erase error: 1 Otherwise: 0	—	—	Count exceeded: 1 Otherwise: 0	Effective address error: 1 Otherwise: 0

Note: I/O_2 and I/O_3 are undefined.

19.22.8 Status Polling

- The I/O_7 status polling flag indicates the operating status in auto-program or auto-erase mode.
- The I/O_6 status polling flag indicates a normal or abnormal end in auto-program or auto-erase mode.

Table 19-49 Status Polling Output Truth Table

Pin Names	Internal Operation in Progress	Abnormal End	—	Normal End
I/O_7	0	1	0	1
I/O_6	0	0	1	1
I/O_0 to I/O_5	0	0	0	0

19.22.9 Programmer Mode Transition Time

Commands cannot be accepted during the oscillation stabilization period or the PROM mode setup period. After the programmer mode setup time, a transition is made to memory read mode.

Table 19-50 Command Wait State Transition Time Specifications

Item	Symbol	Min	Max	Unit
Standby release (oscillation stabilization time)	t_{osc1}	30	—	ms
Programmer mode setup time	t_{bmv}	10	—	ms
V_{CC} hold time	t_{dwn}	0	—	ms

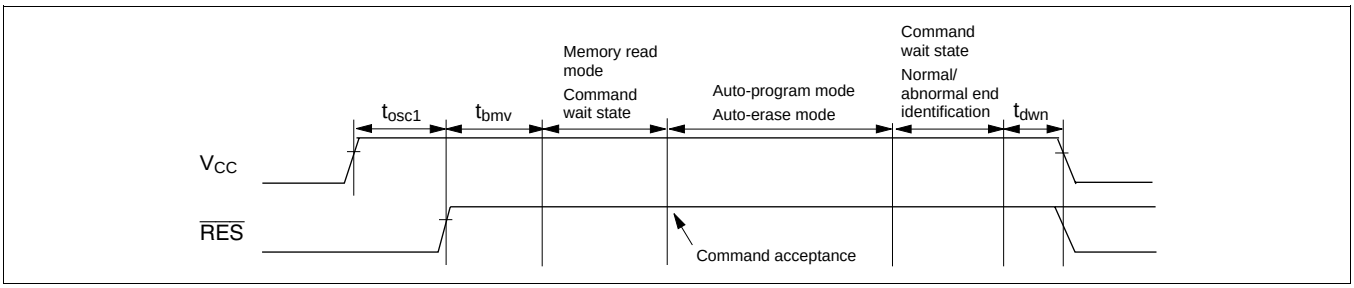

Figure 19-62 Oscillation Stabilization Time, PROM Mode Setup Time, and Power Supply Fall Sequence

19.22.10 Notes on Memory Programming

- When programming addresses which have previously been programmed, carry out auto-erasing before auto-programming.
- When performing programming using PROM mode on a chip that has been programmed/erased in an on-board programming mode, auto-erasing is recommended before carrying out auto-programming.

Notes: 1. The flash memory is initially in the erased state when the device is shipped by Renesas Technology. For other chips for which the erasure history is unknown, it is recommended that auto-erasing be executed to check and supplement the initialization (erase) level.

2. Auto-programming should be performed once only on the same address block. Additional programming cannot be carried out on address blocks that have already been programmed.

19.23 Flash Memory Programming and Erasing Precautions

Precautions concerning the use of on-board programming mode, the RAM emulation function, and programmer mode are summarized below.

Use the specified voltages and timing for programming and erasing: Applied voltages in excess of the rating can permanently damage the device. Use a PROM programmer that supports the Renesas Technology microcomputer device type with 256-kbyte on-chip flash memory (FZTAT256V5A).

Do not select the HN27C4096 setting for the PROM programmer, and only use the specified socket adapter. Failure to observe these points may result in damage to the device.

Powering on and off: When applying or disconnecting V_{CC} power, fix the $\overline{RES}$ pin low and place the flash memory in the hardware protection state.

The power-on and power-off timing requirements should also be satisfied in the event of a power failure and subsequent recovery.

Use the recommended algorithm when programming and erasing flash memory: The recommended algorithm enables programming and erasing to be carried out without subjecting the device to voltage stress or sacrificing program data reliability. When setting the P or E bit in FLMCR1, the watchdog timer should be set beforehand as a precaution against program runaway, etc.

Do not set or clear the SWE bit during execution of a program in flash memory: Wait for at least 100 μs after clearing the SWE bit before executing a program or reading data in flash memory. When the SWE bit is set, data in flash memory can be rewritten, but when SWE = 1, flash memory can only be read in program-verify or erase-verify mode. Access flash memory only for verify operations (verification during programming/erasing). Also, do not clear the SWE bit during programming, erasing, or verifying.

Similarly, when using the RAM emulation function the SWE bit must be cleared before executing a program or reading data in flash memory.

However, the RAM area overlapping flash memory space can be read and written to regardless of whether the SWE bit is set or cleared.

Do not use interrupts while flash memory is being programmed or erased: When flash memory is programmed or erased, all interrupt requests, including NMI, should be disabled to give priority to program/erase operations.

Do not perform additional programming. Erase the memory before reprogramming: In on-board programming, perform only one programming operation on a 128-byte programming unit block. In programmer mode, too, perform only

one programming operation on a 128-byte programming unit block. Programming should be carried out with the entire programming unit block erased.

Before programming, check that the chip is correctly mounted in the PROM programmer: Overcurrent damage to the device can result if the index marks on the PROM programmer socket, socket adapter, and chip are not correctly aligned.

Do not touch the socket adapter or chip during programming: Touching either of these can cause contact faults and write errors.

Section 20 Clock Pulse Generator

20.1 Overview

The H8S/2357 Group has a on-chip clock pulse generator (CPG) that generates the system clock (ø), the bus master clock, and internal clocks.

The clock pulse generator consists of an oscillator circuit, a duty adjustment circuit, a medium-speed clock divider, and a bus master clock selection circuit.

20.1.1 Block Diagram

Figure 20-1 shows a block diagram of the clock pulse generator.

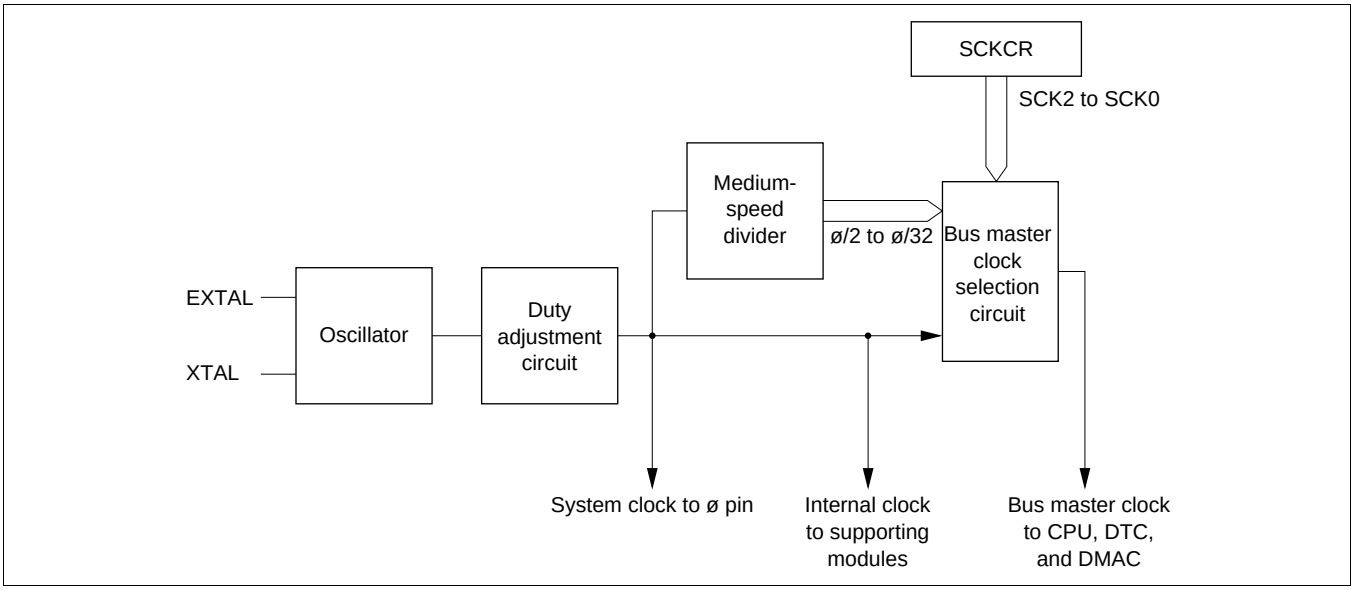

Figure 20-1 Block Diagram of Clock Pulse Generator

20.1.2 Register Configuration

The clock pulse generator is controlled by SCKCR. Table 20-1 shows the register configuration.

Table 20-1 Clock Pulse Generator Register

Name	Abbreviation	R/W	Initial Value	Address*
System clock control register	SCKCR	R/W	H'00	H'FF3A

Note: * Lower 16 bits of the address.

20.2 Register Descriptions

20.2.1 System Clock Control Register (SCKCR)

Bit	:	7	6	5	4	3	2	1	0
		PSTOP	—	—	—	—	SCK2	SCK1	SCK0
Initial value	:	0	0	0	0	0	0	0	0
R/W	:	R/W	R/W	—/(R/W)*	—	—	R/W	R/W	R/W

SCKCR is an 8-bit readable/writable register that performs ø clock output control and medium-speed mode control.

SCKCR is initialized to H'00 by a reset and in hardware standby mode. It is not initialized in software standby mode.

Note: * R/W in the H8S/2390, H8S/2392, H8S/2394 and H8S/2398.

Bit 7—ø Clock Output Disable (PSTOP): Controls ø output.

	Description			
Bit 7 PSTOP	**Normal Operation**	**Sleep Mode**	**Software Standby Mode**	**Hardware Standby Mode**
0	ø output (initial value)	ø output	Fixed high	High impedance
1	Fixed high	Fixed high	Fixed high	High impedance

Bit 6—Reserved: This bit can be read or written to, but only 0 should be written.

Bit 5—Reserved: In the H8S/2357 and H8S/2352, this bit cannot be modified and is always read as 0. Only 0 should be written. This bit is reserved in the H8S/2390, H8S/2392, H8S/2394, and H8S/2398. Only 0 should be written to this bit.

Bits 4 and 3—Reserved: These bits cannot be modified and are always read as 0.

Bits 2 to 0—System Clock Select 2 to 0 (SCK2 to SCK0): These bits select the clock for the bus master.

Bit 2 SCK2	Bit 1 SCK1	Bit 0 SCK0	Description	
0	0	0	Bus master is in high-speed mode	(Initial value)
		1	Medium-speed clock is ø/2	
	1	0	Medium-speed clock is ø/4	
		1	Medium-speed clock is ø/8	
1	0	0	Medium-speed clock is ø/16	
		1	Medium-speed clock is ø/32	
	1	—	—	

20.3 Oscillator

Clock pulses can be supplied by connecting a crystal resonator, or by input of an external clock.

20.3.1 Connecting a Crystal Resonator

Circuit Configuration: A crystal resonator can be connected as shown in the example in figure 20-2. Select the damping resistance R_d according to table 20-2. An AT-cut parallel-resonance crystal should be used.

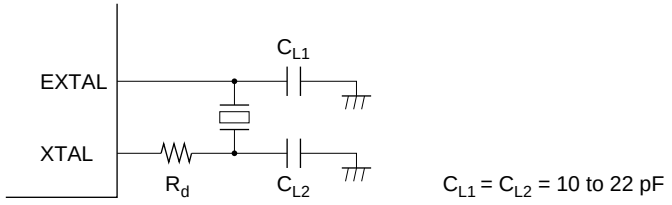

Figure 20-2 Connection of Crystal Resonator (Example)

Table 20-2 Damping Resistance Value

Frequency (MHz)	2	4	8	10	12	16	20
R_d (Ω)	1k	500	200	0	0	0	0

Crystal Resonator: Figure 20-3 shows the equivalent circuit of the crystal resonator. Use a crystal resonator that has the characteristics shown in table 20-3 and the same resonance frequency as the system clock (ø).

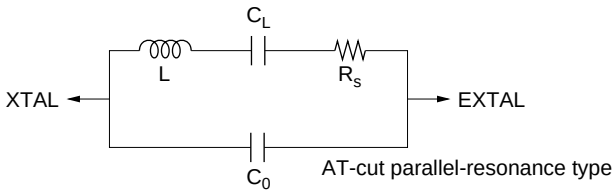

Figure 20-3 Crystal Resonator Equivalent Circuit

Table 20-3 Crystal Resonator Parameters

Frequency (MHz)	2	4	8	10	12	16	20
R_S max (Ω)	500	120	80	70	60	50	40
C_0 max (pF)	7	7	7	7	7	7	7

Note on Board Design: When a crystal resonator is connected, the following points should be noted.

Other signal lines should be routed away from the oscillator circuit to prevent induction from interfering with correct oscillation. See figure 20-4.

When designing the board, place the crystal resonator and its load capacitors as close as possible to the XTAL and EXTAL pins.

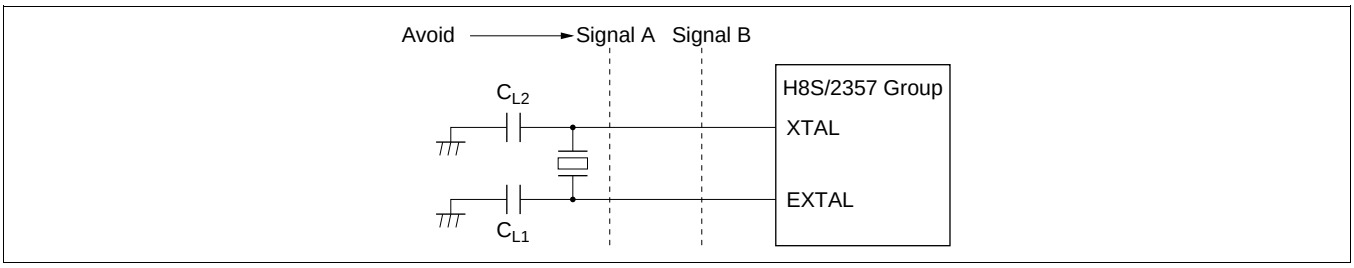

Figure 20-4 Example of Incorrect Board Design

20.3.2 External Clock Input

Circuit Configuration: An external clock signal can be input as shown in the examples in figure 20-5. If the XTAL pin is left open, make sure that stray capacitance is no more than 10 pF.

In example (b) in fugure 20-5, make sure that the external clock is held high in standby mode.

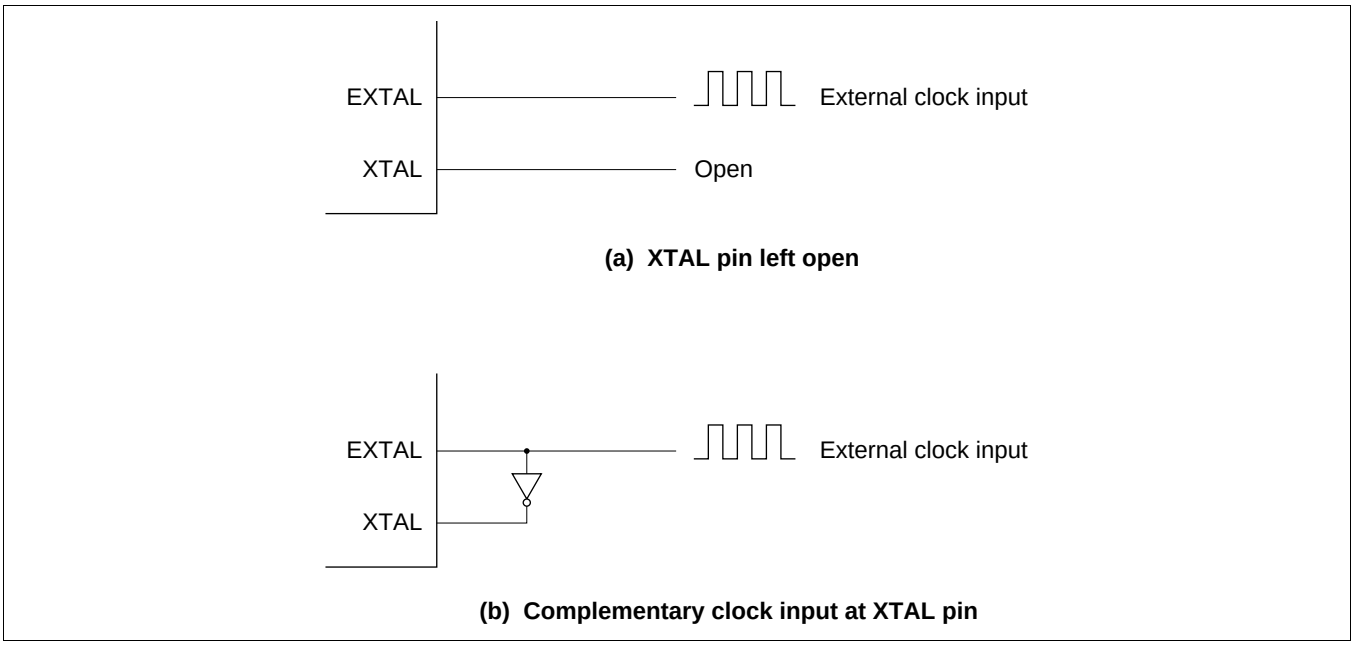

Figure 20-5 External Clock Input (Examples)

External Clock: The external clock signal should have the same frequency as the system clock (ø).

Table 20-4 and figure 20-6 show the input conditions for the external clock.

Table 20-4 External Clock Input Conditions

		V_{CC} = 2.7 V to 5.5 V		V_{CC} = 5.0 V ± 10%				
Item	**Symbol**	**Min**	**Max**	**Min**	**Max**	**Unit**	**Test Conditions**	
External clock input low pulse width	t_{EXL}	40	—	20	—	ns	Figure 20-6	
External clock input high pulse width	t_{EXH}	40	—	20	—	ns		
External clock rise time	t_{EXr}	—	10	—	5	ns		
External clock fall time	t_{EXf}	—	10	—	5	ns		
Clock low pulse width level	t_{CL}	0.4	0.6	0.4	0.6	t_{cyc}	ø ≥ 5 MHz	Figure 22-4
		80	—	80	—	ns	ø < 5 MHz	
Clock high pulse width level	t_{CH}	0.4	0.6	0.4	0.6	t_{cyc}	ø ≥ 5 MHz	
		80	—	80	—	ns	ø < 5 MHz	

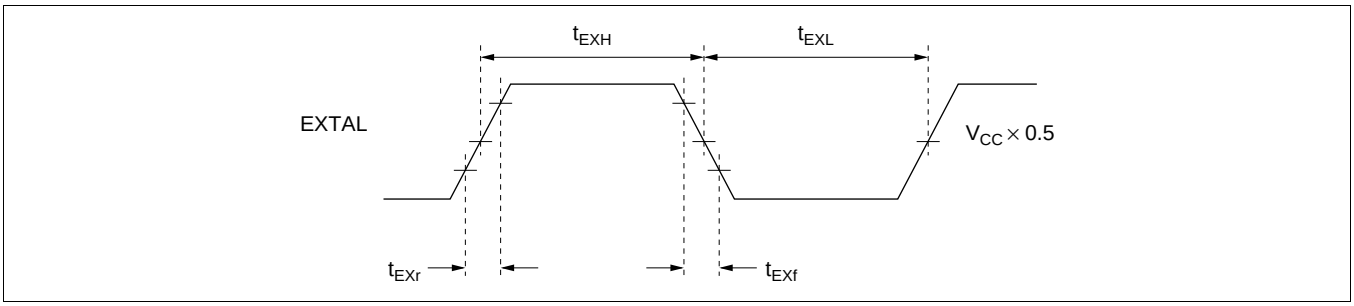

Figure 20-6 External Clock Input Timing

20.4 Duty Adjustment Circuit

When the oscillator frequency is 5 MHz or higher, the duty adjustment circuit adjusts the duty cycle of the clock signal from the oscillator to generate the system clock (ø).

20.5 Medium-Speed Clock Divider

The medium-speed clock divider divides the system clock to generate ø/2, ø/4, ø/8, ø/16, and ø/32.

20.6 Bus Master Clock Selection Circuit

The bus master clock selection circuit selects the system clock (ø) or one of the medium-speed clocks (ø/2, ø/4, or ø/8, ø/16, and ø/32) to be supplied to the bus master, according to the settings of the SCK2 to SCK0 bits in SCKCR.

Section 21 Power-Down Modes

21.1 Overview

In addition to the normal program execution state, the H8S/2357 Group has five power-down modes in which operation of the CPU and oscillator is halted and power dissipation is reduced. Low-power operation can be achieved by individually controlling the CPU, on-chip supporting modules, and so on.

The H8S/2357 Group operating modes are as follows:

(1) High-speed mode
(2) Medium-speed mode
(3) Sleep mode
(4) Module stop mode
(5) Software standby mode
(6) Hardware standby mode

Of these, (2) to (6) are power-down modes. Sleep mode is a CPU mode, medium-speed mode is a CPU and bus master mode, and module stop mode is an on-chip supporting module mode (including bus masters other than the CPU). A combination of these modes can be set.

After a reset, the H8S/2357 Group is in high-speed mode.

Table 21-1 shows the conditions for transition to the various modes, the status of the CPU, on-chip supporting modules, etc., and the method of clearing each mode.

Table 21-1 Operating Modes

Operating Mode	Transition Condition	Clearing Condition	Oscillator	CPU		Modules		I/O Ports
					Registers		Registers	
High speed mode	Control register		Functions	High speed	Functions	High speed	Functions	High speed
Medium-speed mode	Control register		Functions	Medium speed	Functions	High/ medium speed *1	Functions	High speed
Sleep mode	Instruction	Interrupt	Functions	Halted	Retained	High speed	Functions	High speed
Module stop mode	Control register		Functions	High/ medium speed	Functions	Halted	Retained/ reset *2	Retained
Software standby mode	Instruction	External interrupt	Halted	Halted	Retained	Halted	Retained/ reset *2	Retained
Hardware standby mode	Pin		Halted	Halted	Undefined	Halted	Reset	High impedance

Notes: 1. The bus master operates on the medium-speed clock, and other on-chip supporting modules on the high-speed clock.
2. The SCI and A/D converter are reset, and other on-chip supporting modules retain their state.

21.1.1 Register Configuration

Power-down modes are controlled by the SBYCR, SCKCR, and MSTPCR registers. Table 21-2 summarizes these registers.

Table 21-2 Power-Down Mode Registers

Name	Abbreviation	R/W	Initial Value	Address*
Standby control register	SBYCR	R/W	H'08	H'FF38
System clock control register	SCKCR	R/W	H'00	H'FF3A
Module stop control register H	MSTPCRH	R/W	H'3F	H'FF3C
Module stop control register L	MSTPCRL	R/W	H'FF	H'FF3D

Note: * Lower 16 bits of the address.

21.2 Register Descriptions

21.2.1 Standby Control Register (SBYCR)

Bit :	7	6	5	4	3	2	1	0
	SSBY	STS2	STS1	STS0	OPE	—	—	—
Initial value :	0	0	0	0	1	0	0	0
R/W :	R/W	R/W	R/W	R/W	R/W	—	—	R/W

SBYCR is an 8-bit readable/writable register that performs software standby mode control.

SBYCR is initialized to H'08 by a reset and in hardware standby mode. It is not initialized in software standby mode.

Bit 7—Software Standby (SSBY): Specifies a transition to software standby mode. Remains set to 1 when software standby mode is released by an external interrupt, and a transition is made to normal operation. The SSBY bit should be cleared by writing 0 to it.

Bit 7 SSBY	Description	
0	Transition to sleep mode after execution of SLEEP instruction	(Initial value)
1	Transition to software standby mode after execution of SLEEP instruction	

Bits 6 to 4—Standby Timer Select 2 to 0 (STS2 to STS0): These bits select the time the MCU waits for the clock to stabilize when software standby mode is cleared by an external interrupt. With crystal oscillation, refer to table 21-4 and make a selection according to the operating frequency so that the standby time is at least 8 ms (the oscillation stabilization time). With an external clock, any selection can be made*.

Note: * Not available in the F-ZTAT version.

Bit 6 STS2	Bit 5 STS1	Bit 4 STS0	Description	
0	0	0	Standby time = 8,192 states	(Initial value)
		1	Standby time = 16,384 states	
	1	0	Standby time = 32,768 states	
		1	Standby time = 65,536 states	
1	0	0	Standby time = 131,072 states	
		1	Standby time = 262,144 states	
	1	0	Reserved	
		1	Standby time = 16 states*	

Note: * Not available in the F-ZTAT version.

Bit 3—Output Port Enable (OPE): Specifies whether the output of the address bus and bus control signals ($\overline{CS0}$ to $\overline{CS7}$, $\overline{AS}$, $\overline{RD}$, $\overline{HWR}$, $\overline{LWR}$, $\overline{CAS}$) is retained or set to the high-impedance state in software standby mode.

Bit 3 OPE	Description
0	In software standby mode, address bus and bus control signals are high-impedance
1	In software standby mode, address bus and bus control signals retain output state (Initial value)

Bits 2 and 1—Reserved: These bits cannot be modified and are always read as 0.

Bit 0—Reserved: This bit can be read or written to, but only 0 should be written.

21.2.2 System Clock Control Register (SCKCR)

Bit	:	7	6	5	4	3	2	1	0
		PSTOP	—	—	—	—	SCK2	SCK1	SCK0
Initial value	:	0	0	0	0	0	0	0	0
R/W	:	R/W	R/W	—/(R/W)*	—	—	R/W	R/W	R/W

Note: * R/W in the H8S/2390, H8S/2392, H8S/2394, and H8S/2398.

SCKCR is an 8-bit readable/writable register that performs ø clock output control and medium-speed mode control.

SCKCR is initialized to H'00 by a reset and in hardware standby mode. It is not initialized in software standby mode.

Bit 7—ø Clock Output Disable (PSTOP): Controls ø output.

	Description			
Bit 7 PSTOP	**Normal Operating Mode**	**Sleep Mode**	**Software Standby Mode**	**Hardware Standby Mode**
0	ø output (initial value)	ø output	Fixed high	High impedance
1	Fixed high	Fixed high	Fixed high	High impedance

Bits 6—Reserved: This bit can be read or written to, but only 0 should be written.

Bit 5—Reserved: In the H8S/2357 and H8S/2352, this bit cannot be modified and is always read as 0. Only 0 should be written. This bit is reserved in the H8S/2390, H8S/2392, H8S/2394 and H8S/2398. Only 0 should be written to this bit.

Bits 4 and 3—Reserved: These bits are always read as 0. Only 0 should be written to these bits.

Bits 2 to 0—System Clock Select (SCK2 to SCK0): These bits select the clock for the bus master.

Bit 2 SCK2	Bit 1 SCK1	Bit 0 SCK0	Description	
0	0	0	Bus master in high-speed mode	(Initial value)
		1	Medium-speed clock is ø/2	
	1	0	Medium-speed clock is ø/4	
		1	Medium-speed clock is ø/8	
1	0	0	Medium-speed clock is ø/16	
		1	Medium-speed clock is ø/32	
	1	—	—	

21.2.3 Module Stop Control Register (MSTPCR)

	MSTPCRH								MSTPCRL							
Bit :	15	14	13	12	11	10	9	8	7	6	5	4	3	2	1	0
Initial value :	0	0	1	1	1	1	1	1	1	1	1	1	1	1	1	1
R/W :	R/W	R/W	R/W	R/W	R/W	R/W	R/W	R/W	R/W	R/W	R/W	R/W	R/W	R/W	R/W	R/W

MSTPCR is a 16-bit readable/writable register that performs module stop mode control.

MSTPCR is initialized to H'3FFF by a reset and in hardware standby mode. It is not initialized in software standby mode.

Bits 15 to 0—Module Stop (MSTP 15 to MSTP 0): These bits specify module stop mode. See table 21-3 for the method of selecting on-chip supporting modules.

Bits 15 to 0 MSTP15 to MSTP0	Description
0	Module stop mode cleared
1	Module stop mode set

21.3 Medium-Speed Mode

When the SCK2 to SCK0 bits in SCKCR are set to 1, the operating mode changes to medium-speed mode as soon as the current bus cycle ends. In medium-speed mode, the CPU operates on the operating clock (ø/2, ø/4, ø/8, ø/16, or ø/32) specified by the SCK2 to SCK0 bits. The bus masters other than the CPU (the DMAC and DTC) also operate in medium-speed mode. On-chip supporting modules other than the bus masters always operate on the high-speed clock (ø).

In medium-speed mode, a bus access is executed in the specified number of states with respect to the bus master operating clock. For example, if ø/4 is selected as the operating clock, on-chip memory is accessed in 4 states, and internal I/O registers in 8 states.

Medium-speed mode is cleared by clearing all of bits SCK2 to SCK0 to 0. A transition is made to high-speed mode and medium-speed mode is cleared at the end of the current bus cycle.

If a SLEEP instruction is executed when the SSBY bit in SBYCR is cleared to 0, a transition is made to sleep mode. When sleep mode is cleared by an interrupt, medium-speed mode is restored.

If a SLEEP instruction is executed when the SSBY bit in SBYCR is set to 1, a transition is made to software standby mode. When software standby mode is cleared by an external interrupt, medium-speed mode is restored.

When the $\overline{\text{RES}}$ pin is driven low, a transition is made to the reset state, and medium-speed mode is cleared. The same applies in the case of a reset caused by overflow of the watchdog timer.

When the $\overline{\text{STBY}}$ pin is driven low, a transition is made to hardware standby mode.

Figure 21-1 shows the timing for transition to and clearance of medium-speed mode.

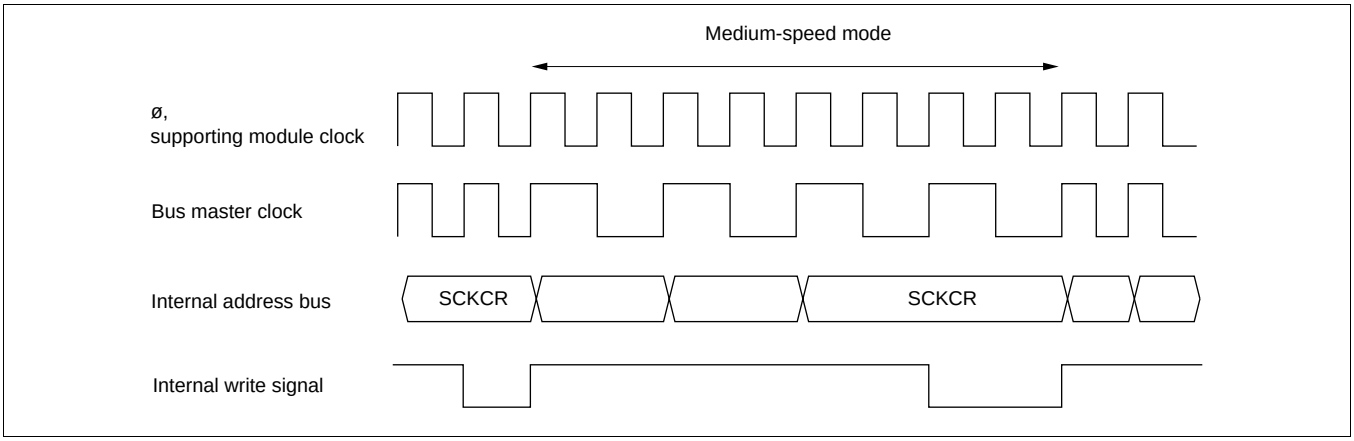

Figure 21-1 Medium-Speed Mode Transition and Clearance Timing

21.4 Sleep Mode

If a SLEEP instruction is executed when the SSBY bit in SBYCR is cleared to 0, the CPU enters sleep mode. In sleep mode, CPU operation stops but the contents of the CPU's internal registers are retained. Other supporting modules do not stop.

Sleep mode is cleared by a reset or any interrupt, and the CPU returns to the normal program execution state via the exception handling state. Sleep mode is not cleared if interrupts are disabled, or if interrupts other than NMI are masked by the CPU.

When the $\overline{\text{STBY}}$ pin is driven low, a transition is made to hardware standby mode.

21.5 Module Stop Mode

21.5.1 Module Stop Mode

Module stop mode can be set for individual on-chip supporting modules.

When the corresponding MSTP bit in MSTPCR is set to 1, module operation stops at the end of the bus cycle and a transition is made to module stop mode. The CPU continues operating independently.

Table 21-3 shows MSTP bits and the corresponding on-chip supporting modules.

When the corresponding MSTP bit is cleared to 0, module stop mode is cleared and the module starts operating at the end of the bus cycle. In module stop mode, the internal states of modules other than the SCI and A/D converter are retained.

After reset clearance, all modules other than DMAC and DTC are in module stop mode.

When an on-chip supporting module is in module stop mode, read/write access to its registers is disabled.

Do not make a transition to sleep mode with MSTPCR set to H'FFFF or H'EFFF, as this will halt operation of the bus controller.

Table 21-3 MSTP Bits and Corresponding On-Chip Supporting Modules

Register	Bit	Module
MSTPCRH	MSTP15	DMA controller (DMAC)
	MSTP14	Data transfer controller (DTC)
	MSTP13	16-bit timer pulse unit (TPU)
	MSTP12	8-bit timer
	MSTP11	Programmable pulse generator (PPG)
	MSTP10	D/A converter
	MSTP9	A/D converter
	MSTP8	—
MSTPCRL	MSTP7	Serial communication interface (SCI) channel 2
	MSTP6	Serial communication interface (SCI) channel 1
	MSTP5	Serial communication interface (SCI) channel 0
	MSTP4	—
	MSTP3	—
	MSTP2	—
	MSTP1	—
	MSTP0	—

Note: Bits 8, and 4 to 0 can be read or written to, but do not affect operation.

21.5.2 Usage Notes

DMAC/DTC Module Stop: Depending on the operating status of the DMAC or DTC, the MSTP15 and MSTP14 bits may not be set to 1. Setting of the DMAC or DTC module stop mode should be carried out only when the respective module is not activated.

For details, refer to section 7, DMA Controller, and section 8, Data Transfer Controller.

On-Chip Supporting Module Interrupt: Relevant interrupt operations cannot be performed in module stop mode. Consequently, if module stop mode is entered when an interrupt has been requested, it will not be possible to clear the CPU interrupt source or the DMAC or DTC activation source. Interrupts should therefore be disabled before entering module stop mode.

Writing to MSTPCR: MSTPCR should only be written to by the CPU.

21.6 Software Standby Mode

21.6.1 Software Standby Mode

If a SLEEP instruction is executed when the SSBY bit in SBYCR is set to 1, software standby mode is entered. In this mode, the CPU, on-chip supporting modules, and oscillator all stop. However, the contents of the CPU's internal registers, RAM data, and the states of on-chip supporting modules other than the SCI and A/D converter, and I/O ports, are retained. Whether the address bus and bus control signals are placed in the high-impedance state or retain the output state can be specified by the OPE bit in SBYCR.

In this mode the oscillator stops, and therefore power dissipation is significantly reduced.

21.6.2 Clearing Software Standby Mode

Software standby mode is cleared by an external interrupt (NMI pin, or pins $\overline{\text{IRQ0}}$ to $\overline{\text{IRQ2}}$), or by means of the $\overline{\text{RES}}$ pin or $\overline{\text{STBY}}$ pin.

- Clearing with an interrupt

  When an NMI or IRQ0 to IRQ2 interrupt request signal is input, clock oscillation starts, and after the elapse of the time set in bits STS2 to STS0 in SYSCR, stable clocks are supplied to the entire H8S/2357 Group chip, software standby mode is cleared, and interrupt exception handling is started.

  When clearing software standby mode with an IRQ0 to IRQ2 interrupt, set the corresponding enable bit to 1 and ensure that no interrupt with a higher priority than interrupts IRQ0 to IRQ2 is generated. Software standby mode cannot be cleared if the interrupt has been masked on the CPU side or has been designated as a DTC activation source.

- Clearing with the $\overline{\text{RES}}$ pin

  When the $\overline{\text{RES}}$ pin is driven low, clock oscillation is started. At the same time as clock oscillation starts, clocks are supplied to the entire H8S/2357 Group chip. Note that the $\overline{\text{RES}}$ pin must be held low until clock oscillation stabilizes. When the $\overline{\text{RES}}$ pin goes high, the CPU begins reset exception handling.

- Clearing with the $\overline{\text{STBY}}$ pin

  When the $\overline{\text{STBY}}$ pin is driven low, a transition is made to hardware standby mode.

21.6.3 Setting Oscillation Stabilization Time after Clearing Software Standby Mode

Bits STS2 to STS0 in SBYCR should be set as described below.

Using a Crystal Oscillator: Set bits STS2 to STS0 so that the standby time is at least 8 ms (the oscillation stabilization time).

Table 21-4 shows the standby times for different operating frequencies and settings of bits STS2 to STS0.

Table 21-4 Oscillation Stabilization Time Settings

STS2	STS1	STS0	Standby Time	20 MHz	16 MHz	12 MHz	10 MHz	8 MHz	6 MHz	4 MHz	2 MHz	Unit
0	0	0	8,192 states	0.41	0.51	0.68	0.8	1.0	1.3	2.0	4.1	ms
		1	16,384 states	0.82	1.0	1.3	1.6	2.0	2.7	4.1	8.2	
	1	0	32,768 states	1.6	2.0	2.7	3.3	4.1	5.5	8.2	16.4	
		1	65,536 states	3.3	4.1	5.5	6.6	8.2	10.9	16.4	32.8	
1	0	0	131,072 states	6.6	8.2	10.9	13.1	16.4	21.8	32.8	65.5	
		1	262,144 states	13.1	16.4	21.8	26.2	32.8	43.6	65.6	131.2	
	1	0	Reserved	—	—	—	—	—	—	—	—	—
		1	16 states	0.8	1.0	1.3	1.6	2.0	2.7	4.0	8.0	µs

: Recommended time setting

Using an External Clock: Any value can be set. Normally, use of the minimum time is recommended.

Note: * The 16-state standby time cannot be used in the F-ZTAT version; a standby time of 8192 states or longer should be used.

21.6.4 Software Standby Mode Application Example

Figure 21-2 shows an example in which a transition is made to software standby mode at the falling edge on the NMI pin, and software standby mode is cleared at the rising edge on the NMI pin.

In this example, an NMI interrupt is accepted with the NMIEG bit in SYSCR cleared to 0 (falling edge specification), then the NMIEG bit is set to 1 (rising edge specification), the SSBY bit is set to 1, and a SLEEP instruction is executed, causing a transition to software standby mode.

Software standby mode is then cleared at the rising edge on the NMI pin.

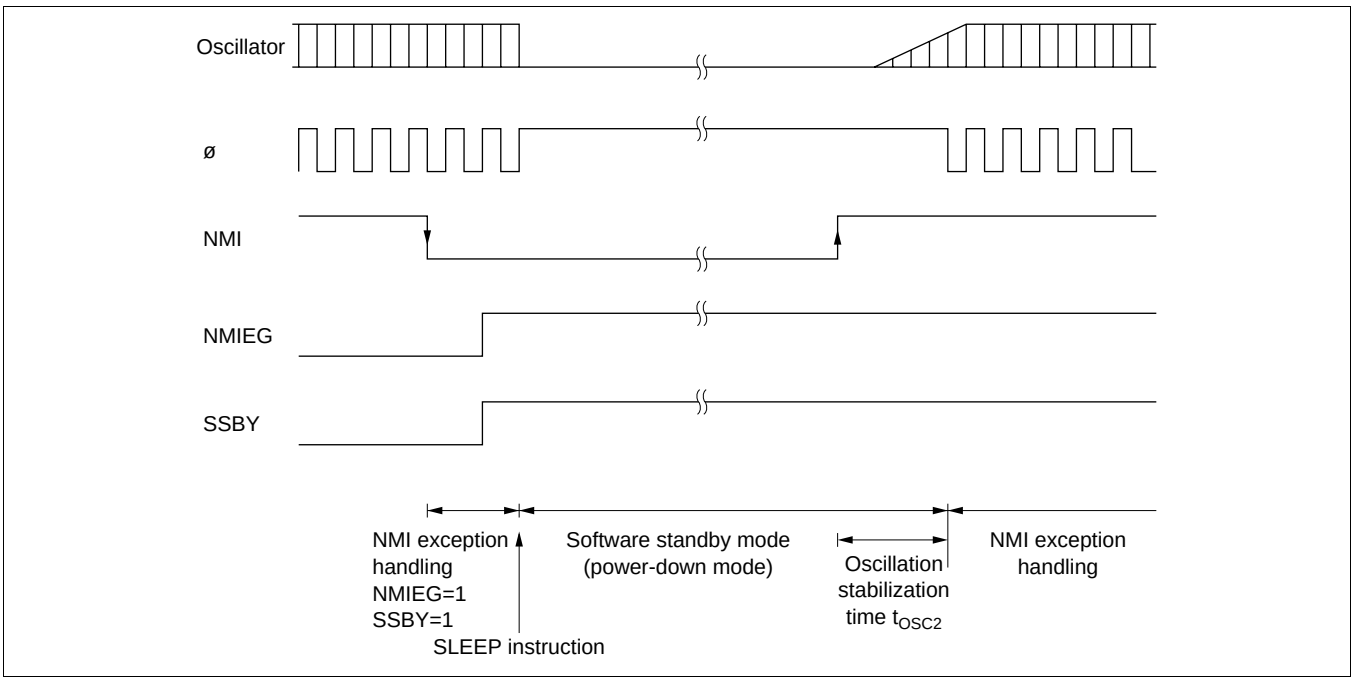

Figure 21-2 Software Standby Mode Application Example

21.6.5 Usage Notes

I/O Port Status: In software standby mode, I/O port states are retained. If the OPE bit is set to 1, the address bus and bus control signal output is also retained. Therefore, there is no reduction in current dissipation for the output current when a high-level signal is output.

Current Dissipation during Oscillation Stabilization Wait Period: Current dissipation increases during the oscillation stabilization wait period.

Write Data Buffer Function: The write data buffer function and software standby mode cannot be used at the same time. When the write data buffer function is used, the WDBE bit in BCRL should be cleared to 0 to cancel the write data buffer function before entering software standby mode. Also check that external writes have finished, by reading external addresses, etc., before executing a SLEEP instruction to enter software standby mode. See section 6.9, Write Data Buffer Function, for details of the write data buffer function.

21.7 Hardware Standby Mode

21.7.1 Hardware Standby Mode

When the $\overline{\text{STBY}}$ pin is driven low, a transition is made to hardware standby mode from any mode.

In hardware standby mode, all functions enter the reset state and stop operation, resulting in a significant reduction in power dissipation. As long as the prescribed voltage is supplied, on-chip RAM data is retained. I/O ports are set to the high-impedance state.

In order to retain on-chip RAM data, the RAME bit in SYSCR should be cleared to 0 before driving the $\overline{\text{STBY}}$ pin low.

Do not change the state of the mode pins (MD_2 to MD_0) while the H8S/2357 Group is in hardware standby mode.

Hardware standby mode is cleared by means of the $\overline{\text{STBY}}$ pin and the $\overline{\text{RES}}$ pin. When the $\overline{\text{STBY}}$ pin is driven high while the $\overline{\text{RES}}$ pin is low, the reset state is set and clock oscillation is started. Ensure that the $\overline{\text{RES}}$ pin is held low until the clock oscillator stabilizes (at least 8 ms—the oscillation stabilization time—when using a crystal oscillator). When the $\overline{\text{RES}}$ pin is subsequently driven high, a transition is made to the program execution state via the reset exception handling state.

21.7.2 Hardware Standby Mode Timing

Figure 21-3 shows an example of hardware standby mode timing.

When the $\overline{\text{STBY}}$ pin is driven low after the $\overline{\text{RES}}$ pin has been driven low, a transition is made to hardware standby mode. Hardware standby mode is cleared by driving the $\overline{\text{STBY}}$ pin high, waiting for the oscillation stabilization time, then changing the $\overline{\text{RES}}$ pin from low to high.

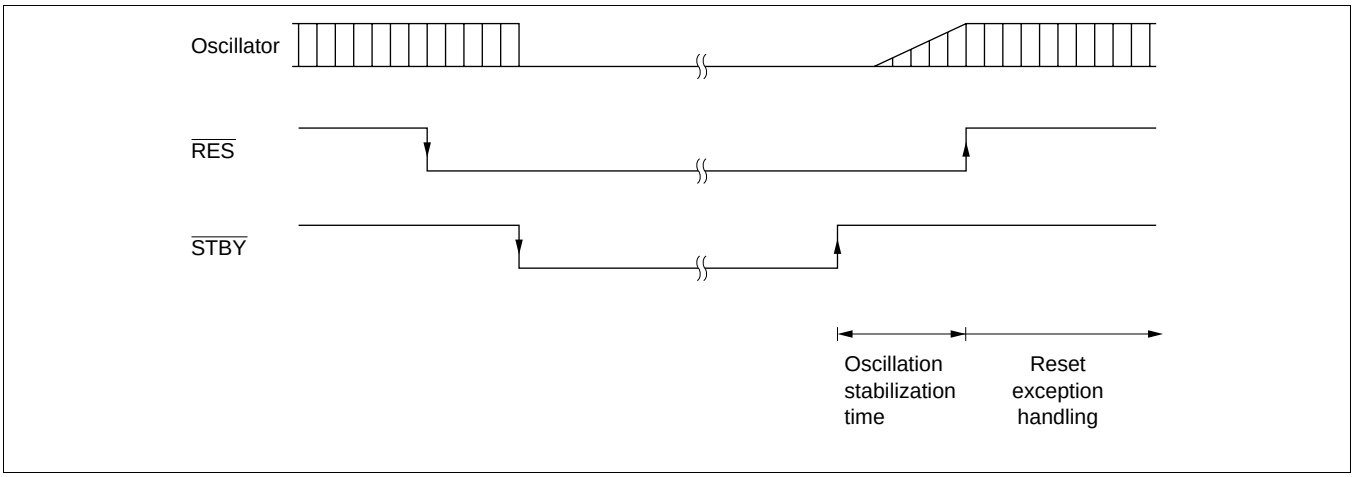

Figure 21-3 Hardware Standby Mode Timing (Example)

21.8 ø Clock Output Disabling Function

Output of the ø clock can be controlled by means of the PSTOP bit in SCKCR, and DDR for the corresponding port. When the PSTOP bit is set to 1, the ø clock stops at the end of the bus cycle, and ø output goes high. ø clock output is enabled when the PSTOP bit is cleared to 0. When DDR for the corresponding port is cleared to 0, ø clock output is disabled and input port mode is set. Table 21-5 shows the state of the ø pin in each processing state.

Table 21-5 ø Pin State in Each Processing State

DDR	0	1	
PSTOP	—	0	1
Hardware standby mode	High impedance		
Software standby mode	High impedance	Fixed high	
Sleep mode	High impedance	ø output	Fixed high
Normal operating state	High impedance	ø output	Fixed high

Section 22 Electrical Characteristics

22.1 Electrical Characteristics of Masked ROM Version (H8S/2398) and ROMless Versions (H8S/2394, H8S/2392, and H8S/2390)

22.1.1 Absolute Maximum Ratings

Table 22-1 Absolute Maximum Ratings

Item	Symbol	Value	Unit
Power supply voltage	V_{CC}*	–0.3 to +7.0	V
Input voltage (except port 4)	V_{in}	–0.3 to + V_{CC} +0.3	V
Input voltage (port 4)	V_{in}	–0.3 to AV_{CC} +0.3	V
Reference voltage	V_{ref}	–0.3 to AV_{CC} +0.3	V
Analog power supply voltage	AV_{CC}	–0.3 to +7.0	V
Analog input voltage	V_{AN}	–0.3 to AV_{CC} +0.3	V
Operating temperature	T_{opr}	Regular specifications: –20 to +75	°C
		Wide-range specifications: –40 to +85	°C
Storage temperature	T_{stg}	–55 to +125	°C

Caution: Permanent damage to the chip may result if absolute maximum ratings are exceeded.

Note: * Do not supply the power supply voltage to the V_{CL} pin. Doing so could permanently damage the LSI. Connect an external capacitor between the V_{CL} pin and the ground pin.

22.1.2 DC Characteristics

Table 22-2 lists the DC characteristics.
Table 22-3 lists the permissible output currents.

Table 22-2 DC Characteristics

Conditions: V_{CC} = 5.0 V ± 10%, AV_{CC} = 5.0 V ± 10%, V_{ref} = 4.5 V to AV_{CC}, V_{SS} = AV_{SS} = 0 V*[1], Ta = -20 to +75°C (regular specifications), Ta = -40 to +85°C (wide-range specifications)

Item		Symbol	Min	Typ	Max	Unit	Test Conditions
Schmitt trigger input voltage	Port 2, $P6_4$ to $P6_7$, PA_4 to PA_7	V_T^-	1.0	—	—	V	
		V_T^+	—	—	$V_{CC} \times 0.7$	V	
		$V_T^+ - V_T^-$	0.4	—	—	V	
Input high voltage	$\overline{RES}$, $\overline{STBY}$, NMI, MD_2 to MD_0	V_{IH}	V_{CC} – 0.7	—	V_{CC} + 0.3	V	
	EXTAL		$V_{CC} \times 0.7$	—	V_{CC} + 0.3	V	
	Ports 1, 3, 5, B to G, $P6_0$ to $P6_3$, PA_0 to PA_3		2.0	—	V_{CC} + 0.3	V	
	Port 4		2.0	—	AV_{CC} + 0.3	V	
Input low voltage	$\overline{RES}$, $\overline{STBY}$, MD_2 to MD_0	V_{IL}	–0.3	—	0.5	V	
	NMI, EXTAL, Ports 1, 3 to 5, B to G, $P6_0$ to $P6_3$, PA_0 to PA_3		–0.3	—	0.8	V	
Output high voltage	All output pins	V_{OH}	V_{CC} – 0.5	—	—	V	I_{OH} = –200 μA
			3.5	—	—	V	I_{OH} = –1 mA
Output low voltage	All output pins	V_{OL}	—	—	0.4	V	I_{OL} = 1.6 mA
	Ports 1, A to C		—	—	1.0	V	I_{OL} = 10 mA
Input leakage current	$\overline{RES}$	$\lvert I_{in} \rvert$	—	—	10.0	μA	V_{in} = 0.5 V to V_{CC} – 0.5 V
	$\overline{STBY}$, NMI, MD_2 to MD_0		—	—	1.0	μA	
	Port 4		—	—	1.0	μA	V_{in} = 0.5 V to AV_{CC} – 0.5 V
Three-state leakage current (off state)	Ports 1 to 3, 5, 6, A to G	$\lvert I_{TSI} \rvert$	—	—	1.0	μA	V_{in} = 0.5 V to V_{CC} – 0.5 V
MOS input pull-up current	Ports A to E	$-I_P$	50	—	300	μA	V_{in} = 0 V
Input capacitance	$\overline{RES}$	C_{in}	—	—	80	pF	V_{in} = 0 V f = 1 MHz T_a = 25°C
	NMI		—	—	50	pF	
	All input pins except $\overline{RES}$ and NMI		—	—	15	pF	

Item		Symbol	Min	Typ	Max	Unit	Test Conditions
Current dissipation*2	Normal operation	I_{CC}*4	—	46 (5.0 V)	69	mA	f = 20 MHz
	Sleep mode		—	37 (5.0 V)	56	mA	f = 20 MHz
	Standby mode*3		—	0.01	10	μA	$T_a \leq 50°C$
			—	—	80		$50°C < T_a$
Analog power supply current	During A/D and D/A conversion	AI_{CC}	—	0.8 (5.0 V)	2.0	mA	
	Idle		—	0.01	5.0	μA	
Reference current	During A/D and D/A conversion	AI_{CC}	—	2.2 (5.0 V)	3.0	mA	
	Idle		—	0.01	5.0	μA	
RAM standby voltage		V_{RAM}	2.0	—	—	V	

Notes: 1. If the A/D and D/A converters are not used, do not leave the AV_{CC}, AV_{SS}, and V_{ref} pins open. Connect AV_{CC} and V_{ref} to V_{CC} pin, and connect AV_{SS} to V_{SS} pin.

2. Current dissipation values are for V_{IH} min = V_{CC} -0.2 V and V_{IL} max = 0.5 V with all output pins unloaded and the on-chip pull-up MOS in the off state.

3. The values are for $V_{RAM} \leq V_{CC} < 4.5$ V, V_{IH} min = $V_{CC} \times 0.9$, and V_{IL} max = 0.3 V.

4. I_{CC} depends on V_{CC} and f as follows:
I_{CC} max = 3.0 (mA) + 0.60 (mA/(MHz × V)) × V_{CC} × f [normal mode]
I_{CC} max = 3.0 (mA) + 0.48 (mA/(MHz × V)) × V_{CC} × f [sleep mode]

Table 22-3 Permissible Output Currents

Conditions: V_{CC} = 5.0 V ± 10%, AV_{CC} = 5.0 V ± 10%, V_{ref} = 4.5 V to AV_{CC}, V_{SS} = AV_{SS} = 0 V, T_a = –20 to +75°C (regular specifications), T_a = –40 to +85°C (wide-range specifications)

Item		Symbol	Min	Typ	Max	Unit
Permissible output low current (per pin)	Ports 1, A to C	I_{OL}	—	—	10	mA
	Other output pins		—	—	2.0	mA
Permissible output low current (total)	Total of 32 pins including ports 1 and A to C	ΣI_{OL}	—	—	80	mA
	Total of all output pins, including the above		—	—	120	mA
Permissible output high current (per pin)	All output pins	$-I_{OH}$	—	—	2.0	mA
Permissible output high current (total)	Total of all output pins	$\Sigma -I_{OH}$	—	—	40	mA

Notes: 1. To protect chip reliability, do not exceed the output current values in table 22-3.

2. When driving a darlington pair or LED directly, always insert a current-limiting resistor in the output line, as show in figures 22-1 and 22-2.

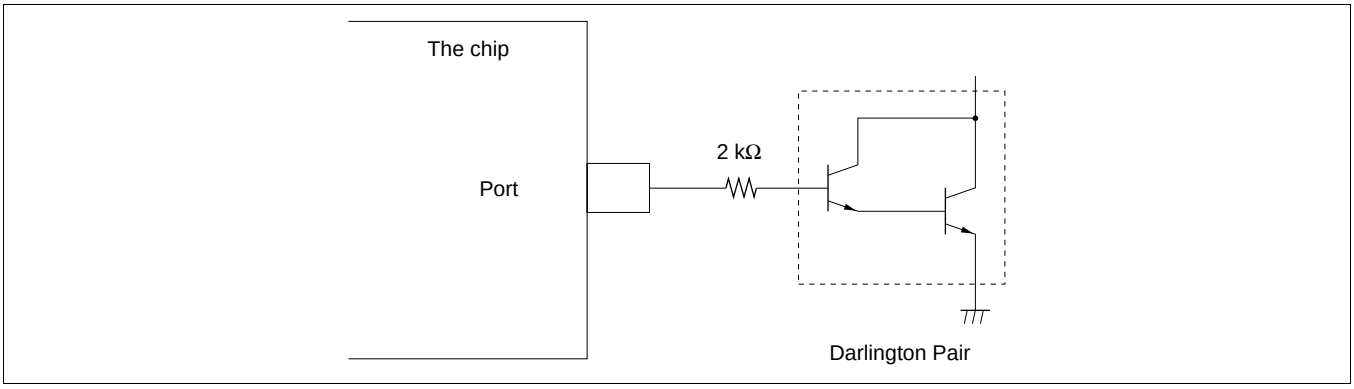

Figure 22-1 Darlington Pair Drive Circuit (Example)

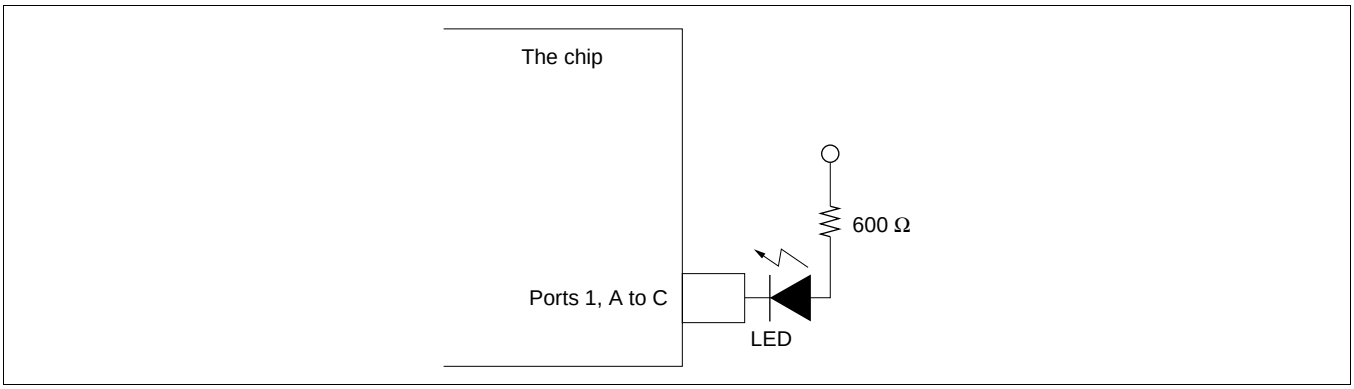

Figure 22-2 LED Drive Circuit (Example)

22.1.3 AC Characteristics

Figure 22-3 show, the test conditions for the AC characteristics.

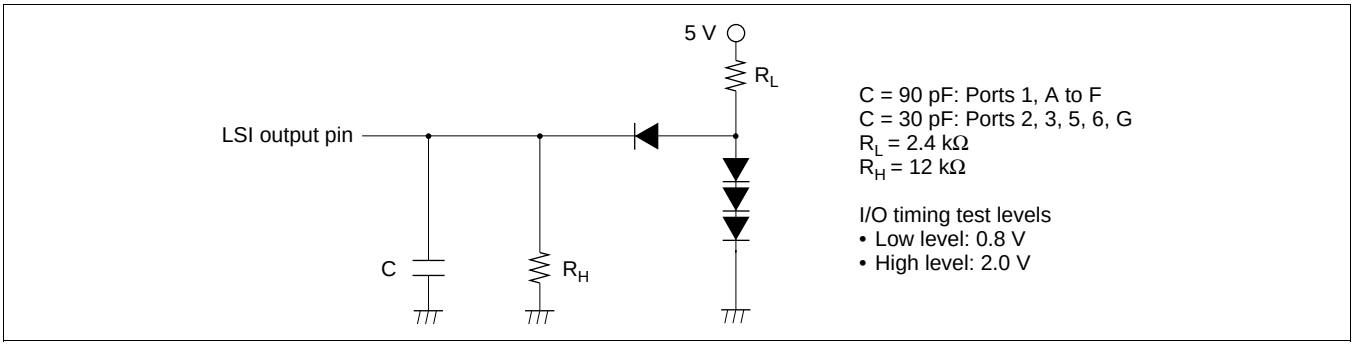

Figure 22-3 Output Load Circuit

(1) Clock Timing

Table 22-4 lists the clock timing

Table 22-4 Clock Timing

Conditions: V_{CC} = 5.0 V ± 10%, AV_{CC} = 5.0 V ± 10%, V_{ref} = 4.5 V to AV_{CC},
V_{SS} = AV_{SS} = 0 V, ø = 10 to 20 MHz, T_a = –20 to +75°C (regular specifications),
T_a = –40 to +85°C (wide-range specifications)

Item	Symbol	Condition Min	Condition Max	Unit	Test Conditions
Clock cycle time	t_{cyc}	50	100	ns	Figure 22-4
Clock high pulse width	t_{CH}	20	—	ns	
Clock low pulse width	t_{CL}	20	—	ns	
Clock rise time	t_{Cr}	—	5	ns	
Clock fall time	t_{Cf}	—	5	ns	
Clock oscillator setting time at reset (crystal)	t_{OSC1}	10	—	ms	Figure 22-5
Clock oscillator setting time in software standby (crystal)	t_{OSC2}	10	—	ms	Figure 21-2
External clock output stabilization delay time	t_{DEXT}	500	—	µs	Figure 22-5

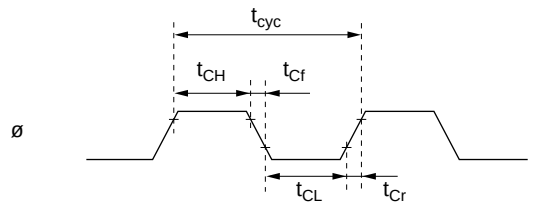

Figure 22-4 System Clock Timing

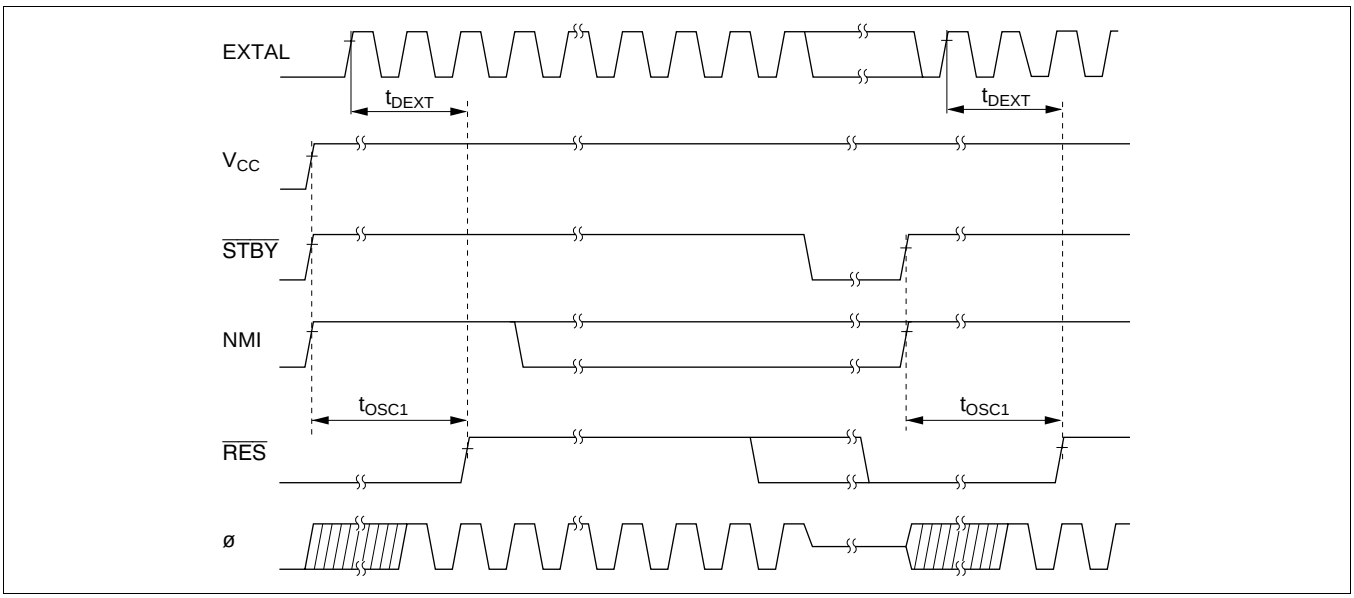

Figure 22-5 Oscillator Settling Timing

(2) Control Signal Timing

Table 22-5 lists the control signal timing.

Table 22-5 Control Signal Timing

Conditions: V_{CC} = 5.0 V ± 10%, AV_{CC} = 5.0 V ± 10%, V_{ref} = 4.5 V to AV_{CC},
V_{SS} = AV_{SS} = 0 V, ø = 10 to 20 MHz, T_a = –20 to +75°C (regular specifications),
T_a = –40 to +85°C (wide-range specifications)

Item	Symbol	Condition Min	Condition Max	Unit	Test Conditions
$\overline{RES}$ setup time	t_{RESS}	200	—	ns	Figure 22-6
$\overline{RES}$ pulse width	t_{RESW}	20	—	t_{cyc}	
NMI setup time	t_{NMIS}	150	—	ns	Figure 22-7
NMI hold time	t_{NMIH}	10	—	ns	
NMI pulse width (exiting software standby mode)	t_{NMIW}	200	—	ns	
$\overline{IRQ}$ setup time	t_{IRQS}	150	—	ns	
$\overline{IRQ}$ hold time	t_{IRQH}	10	—	ns	
$\overline{IRQ}$ pulse width (exiting software standby mode)	t_{IRQW}	200	—	ns	

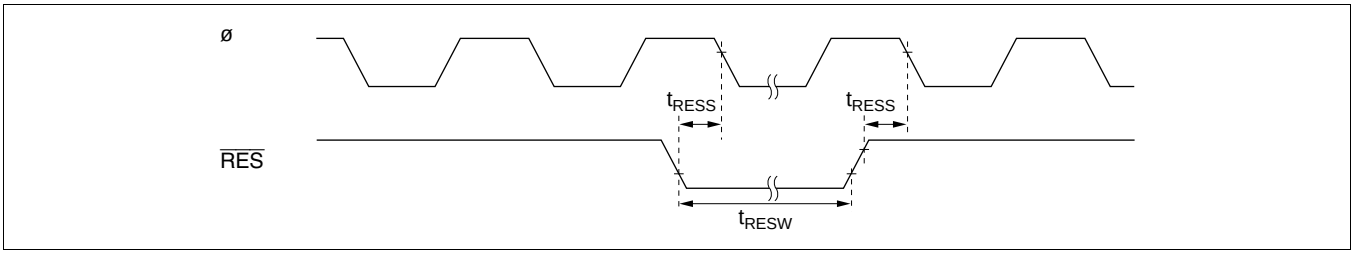

Figure 22-6 Reset Input Timing

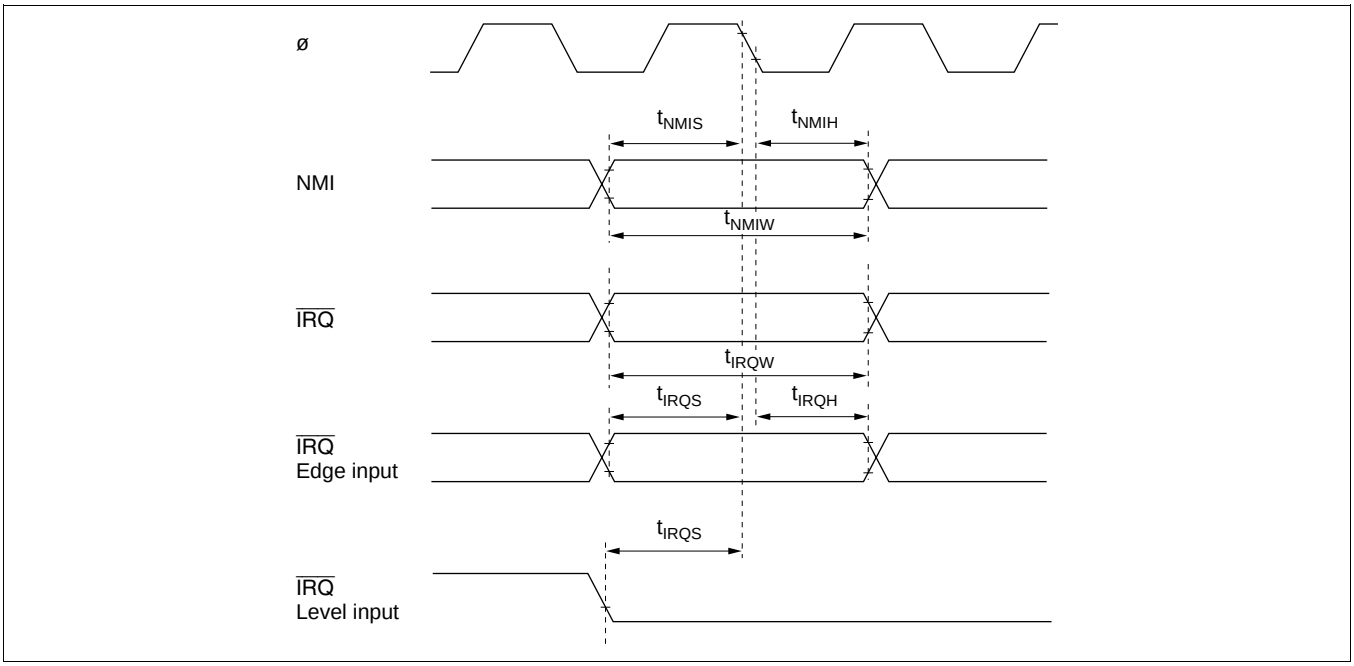

Figure 22-7 Interrupt Input Timing

(3) Bus Timing

Table 22-6 lists the bus timing.

Table 22-6 Bus Timing

Conditions: V_{CC} = 5.0 V ± 10%, AV_{CC} = 5.0 V ± 10%, V_{ref} = 4.5 V to AV_{CC},
V_{SS} = AV_{SS} = 0 V, ø= 10 to 20 MHz, T_a = –20 to +75°C (regular specifications),
T_a = –40 to +85°C (wide-range specifications)

		Condition			Test
Item	**Symbol**	**Min**	**Max**	**Unit**	**Conditions**
Address delay time	t_{AD}	—	20	ns	Figure 22-8 to Figure 22-15
Address setup time	t_{AS}	0.5 × t_{cyc} – 15	—	ns	
Address hold time	t_{AH}	0.5 × t_{cyc} – 10	—	ns	
Precharge time	t_{PCH}	1.5 × t_{cyc} – 20	—	ns	
$\overline{CS}$ delay time 1	t_{CSD1}	—	20	ns	
$\overline{CS}$ delay time 2	t_{CSD2}	—	20	ns	
$\overline{CS}$ delay time 3	t_{CSD3}	—	25	ns	
$\overline{AS}$ delay time	t_{ASD}	—	20	ns	
$\overline{RD}$ delay time 1	t_{RSD1}	—	20	ns	
$\overline{RD}$ delay time 2	t_{RSD2}	—	20	ns	
$\overline{CAS}$ delay time	t_{CASD}	—	20	ns	
Read data setup time	t_{RDS}	15	—	ns	
Read data hold time	t_{RDH}	0	—	ns	
Read data access time 1	t_{ACC1}	—	1.0 × t_{cyc} – 25	ns	
Read data access time 2	t_{ACC2}	—	1.5 × t_{cyc} – 25	ns	
Read data access time 3	t_{ACC3}	—	2.0 × t_{cyc} – 25	ns	
Read data access time 4	t_{ACC4}	—	2.5 × t_{cyc} – 25	ns	
Read data access time 5	t_{ACC5}	—	3.0 × t_{cyc} – 25	ns	
$\overline{WR}$ delay time 1	t_{WRD1}	—	20	ns	
$\overline{WR}$ delay time 2	t_{WRD2}	—	20	ns	
$\overline{WR}$ pulse width 1	t_{WSW1}	1.0 × t_{cyc} – 20	—	ns	
$\overline{WR}$ pulse width 2	t_{WSW2}	1.5 × t_{cyc} – 20	—	ns	
Write data delay time	t_{WDD}	—	30	ns	
Write data setup time	t_{WDS}	0.5 × t_{cyc} – 20	—	ns	
Write data hold time	t_{WDH}	0.5 × t_{cyc} – 10	—	ns	
$\overline{WR}$ setup time	t_{WCS}	0.5 × t_{cyc} – 10	—	ns	

Item	Symbol	Condition Min	Condition Max	Unit	Test Conditions
$\overline{WR}$ hold time	t_{WCH}	0.5 × t_{cyc} – 10	—	ns	Figure 22-8 to Figure 22-15
$\overline{CAS}$ setup time	t_{CSR}	0.5 × t_{cyc} – 10	—	ns	Figure 22-12
$\overline{WAIT}$ setup time	t_{WTS}	30	—	ns	Figure 22-10
$\overline{WAIT}$ hold time	t_{WTH}	5	—	ns	
$\overline{BREQ}$ setup time	t_{BRQS}	30	—	ns	Figure 22-16
$\overline{BACK}$ delay time	t_{BACD}	—	15	ns	
Bus-floating time	t_{BZD}	—	50	ns	
$\overline{BREQO}$ delay time	t_{BRQOD}	—	30	ns	Figure 22-17

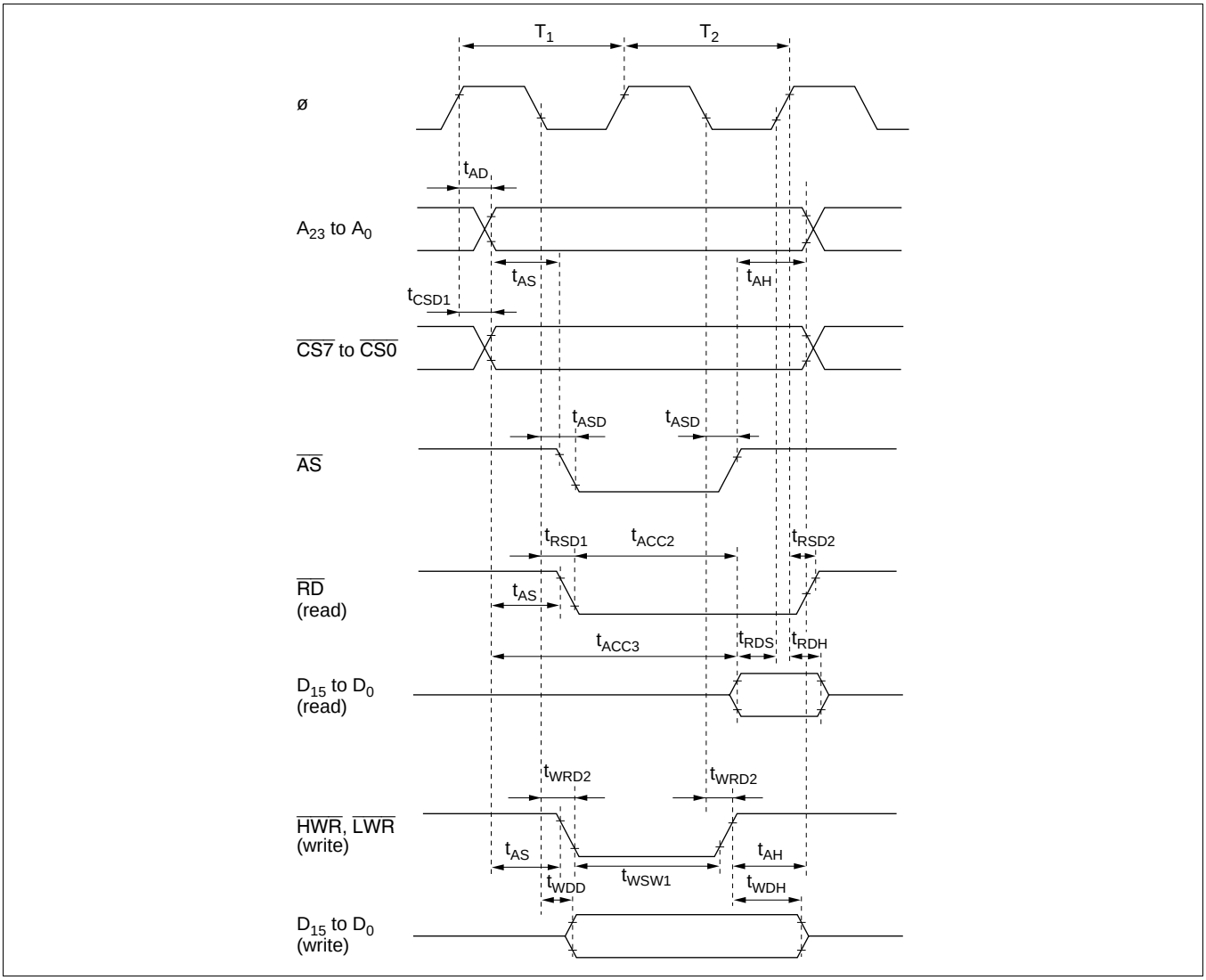

Figure 22-8 Basic Bus Timing (Two-State Access)

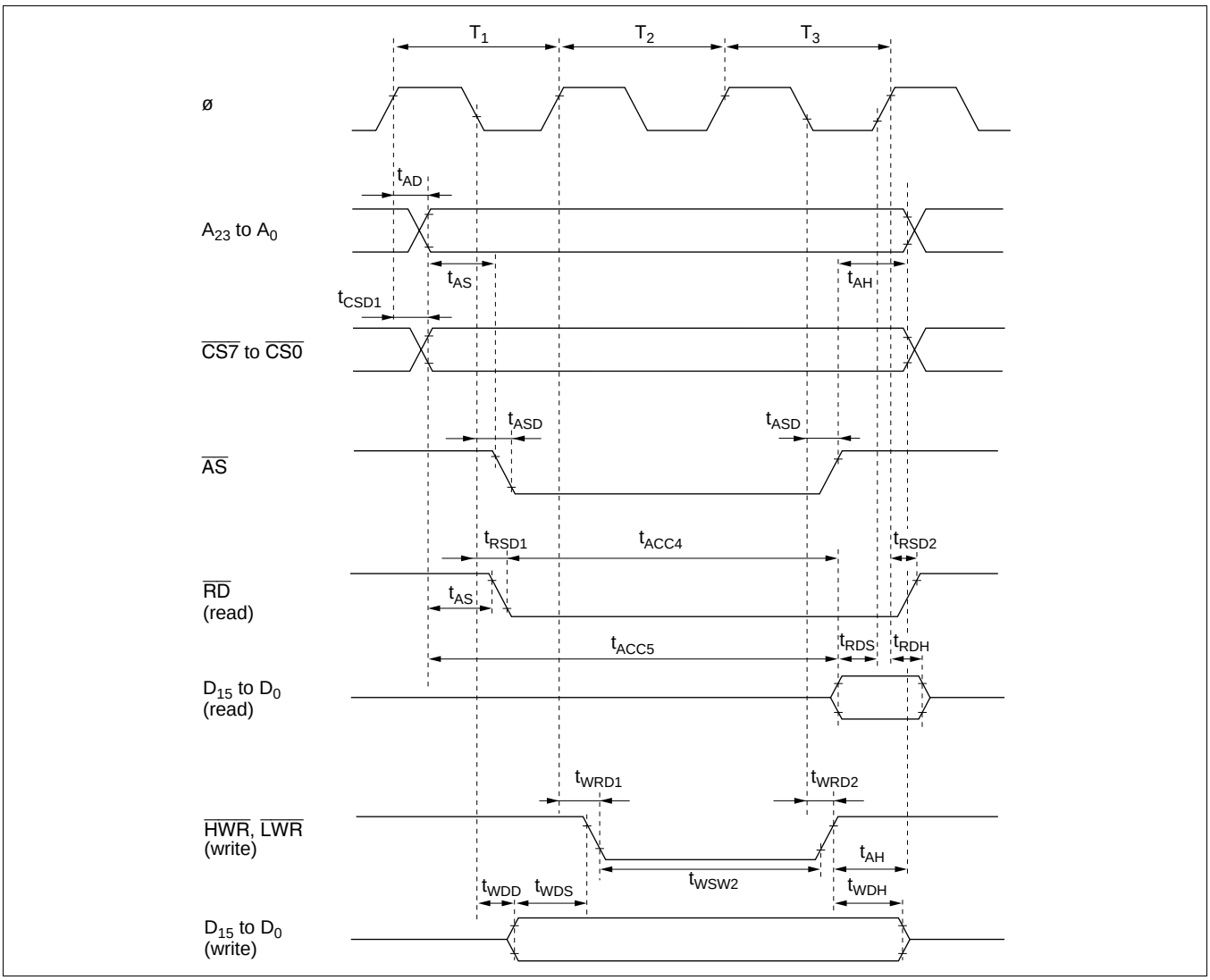

Figure 22-9 Basic Bus Timing (Three-State Access)

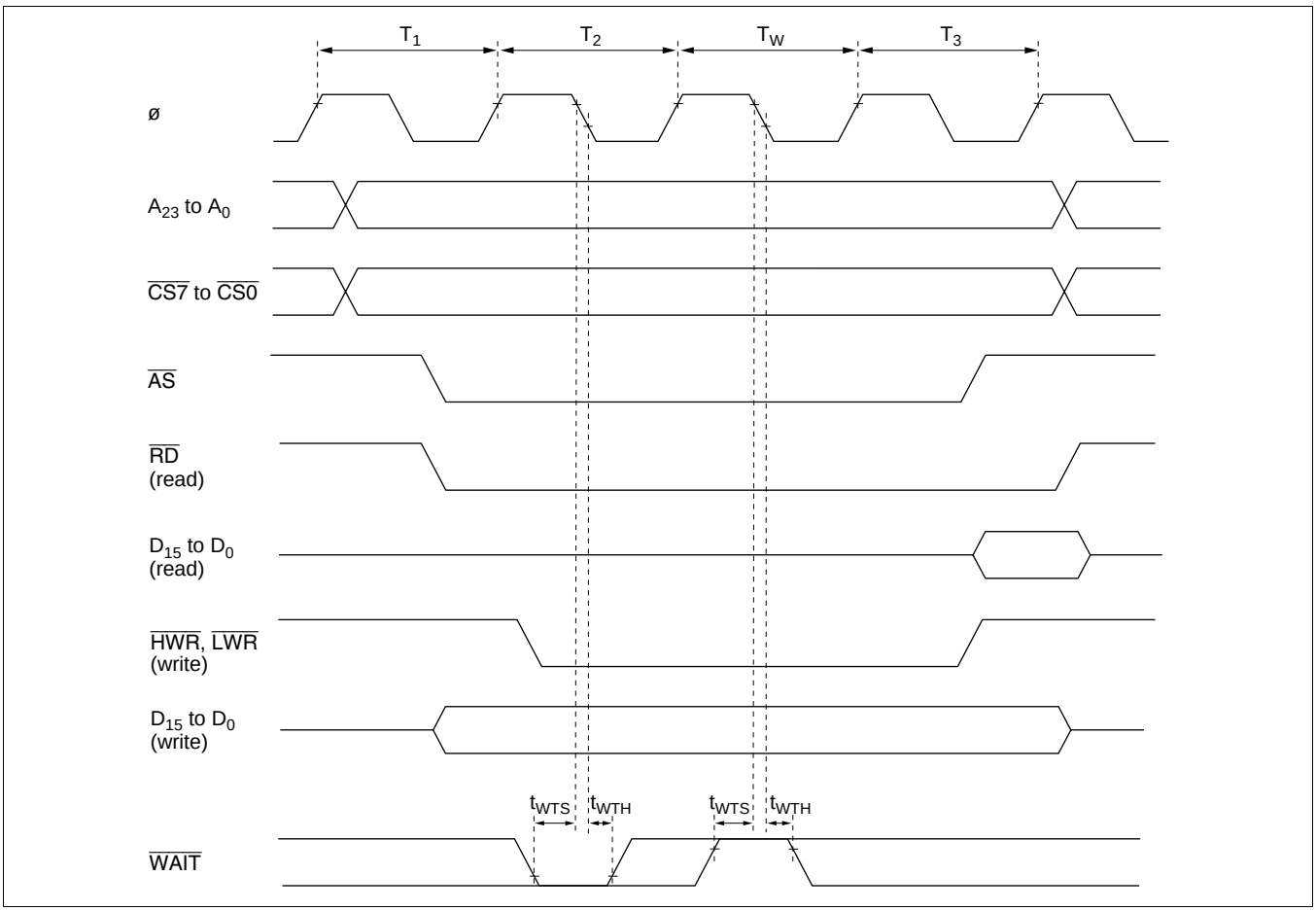

Figure 22-10 Basic Bus Timing (Three-State Access with One Wait State)

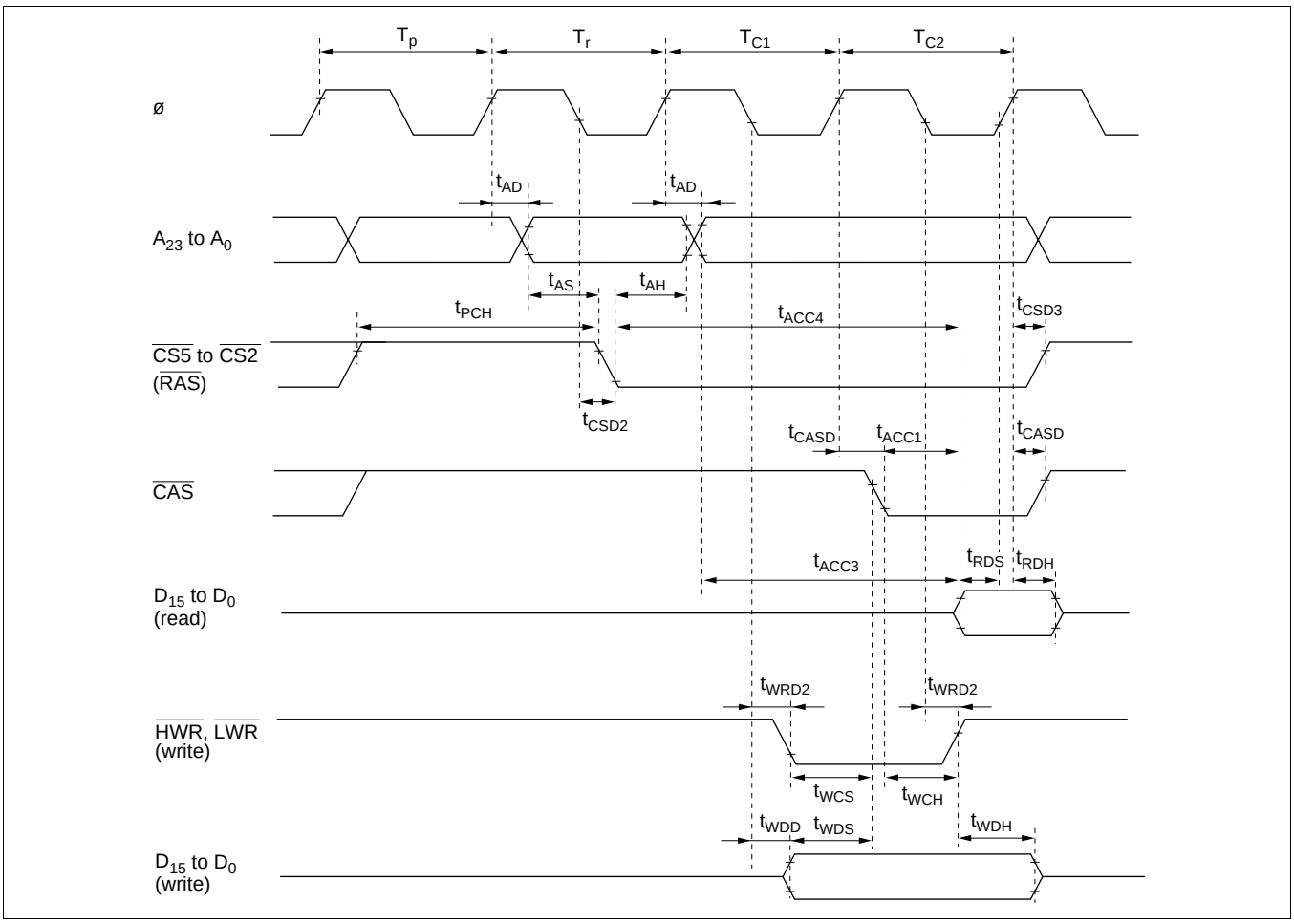

Figure 22-11 DRAM Bus Timing

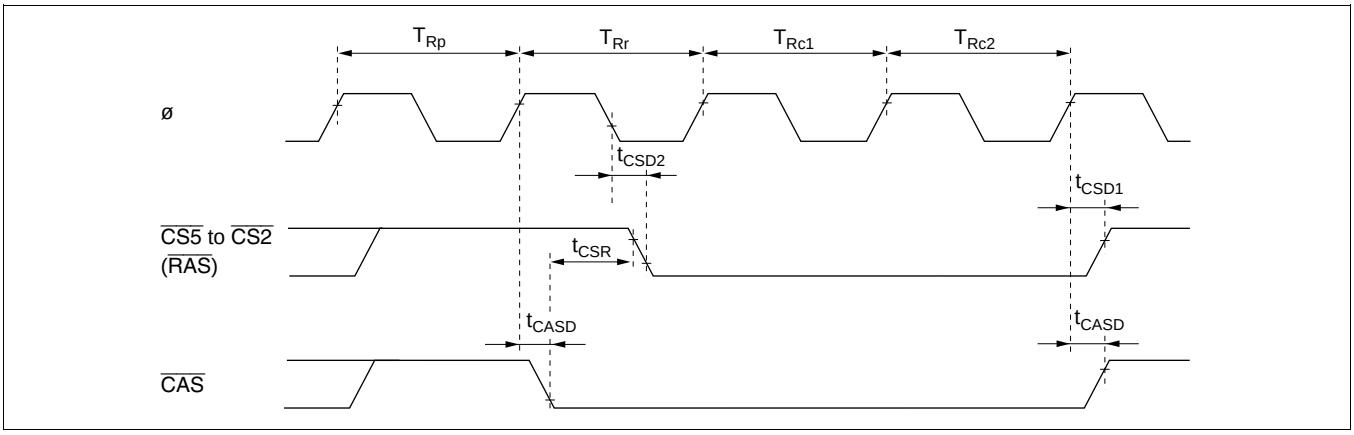

Figure 22-12 CAS-Before-RAS Refresh Timing

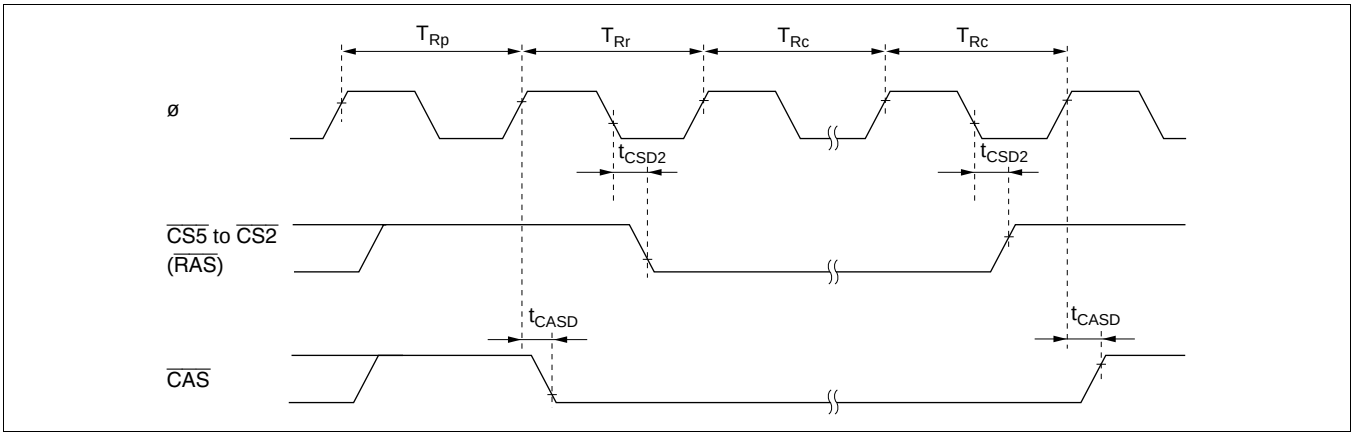

Figure 22-13 Self-Refresh Timing

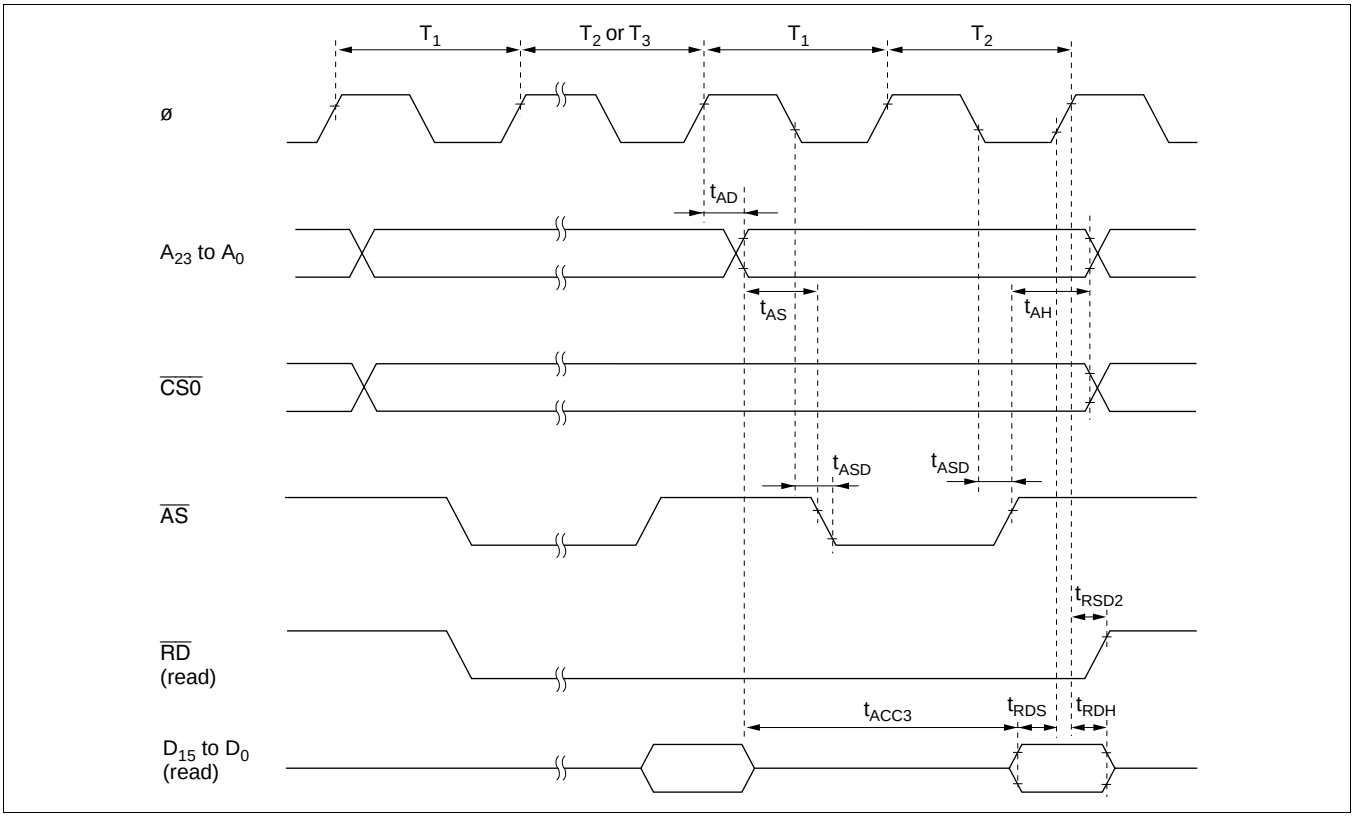

Figure 22-14 Burst ROM Access Timing (Two-State Access)

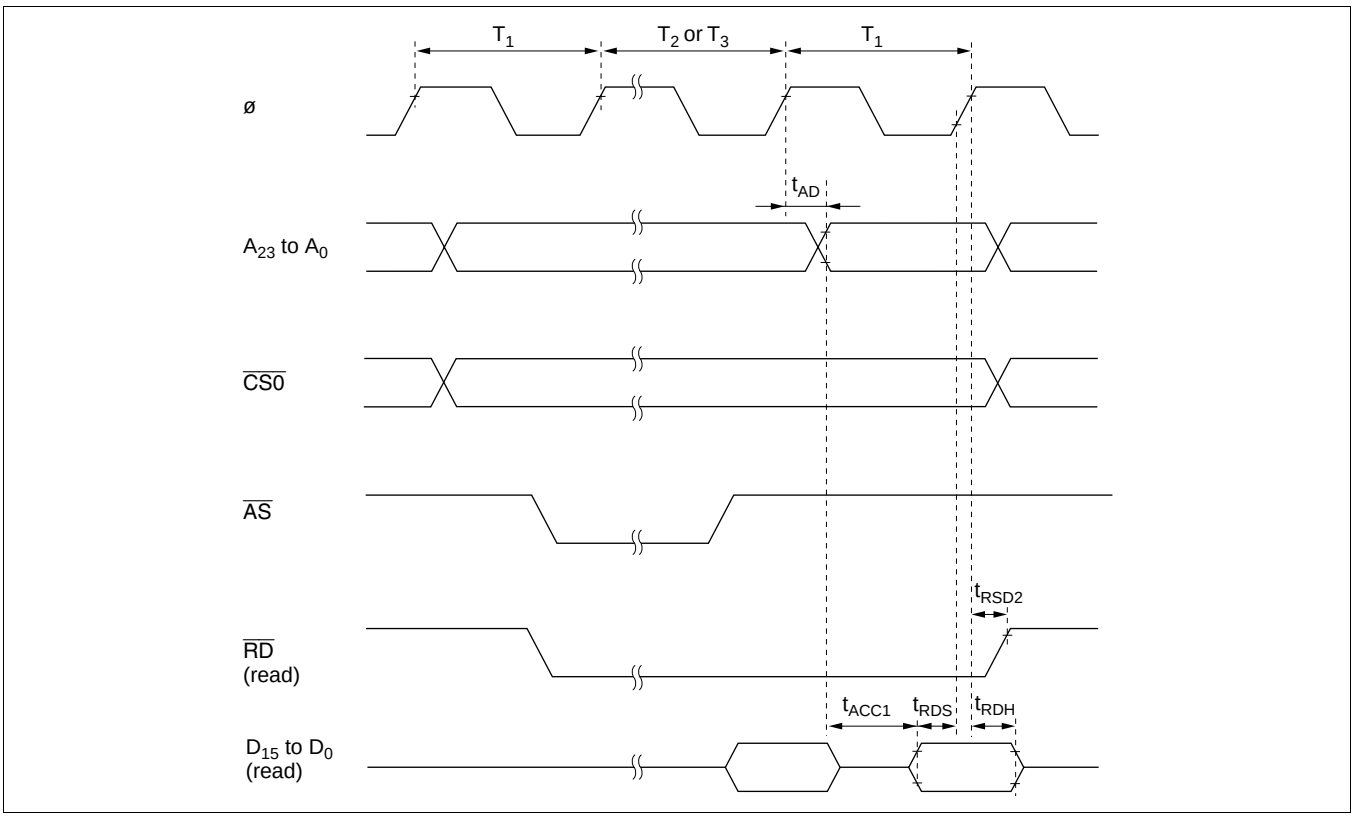

Figure 22-15 Burst ROM Access Timing (One-State Access)

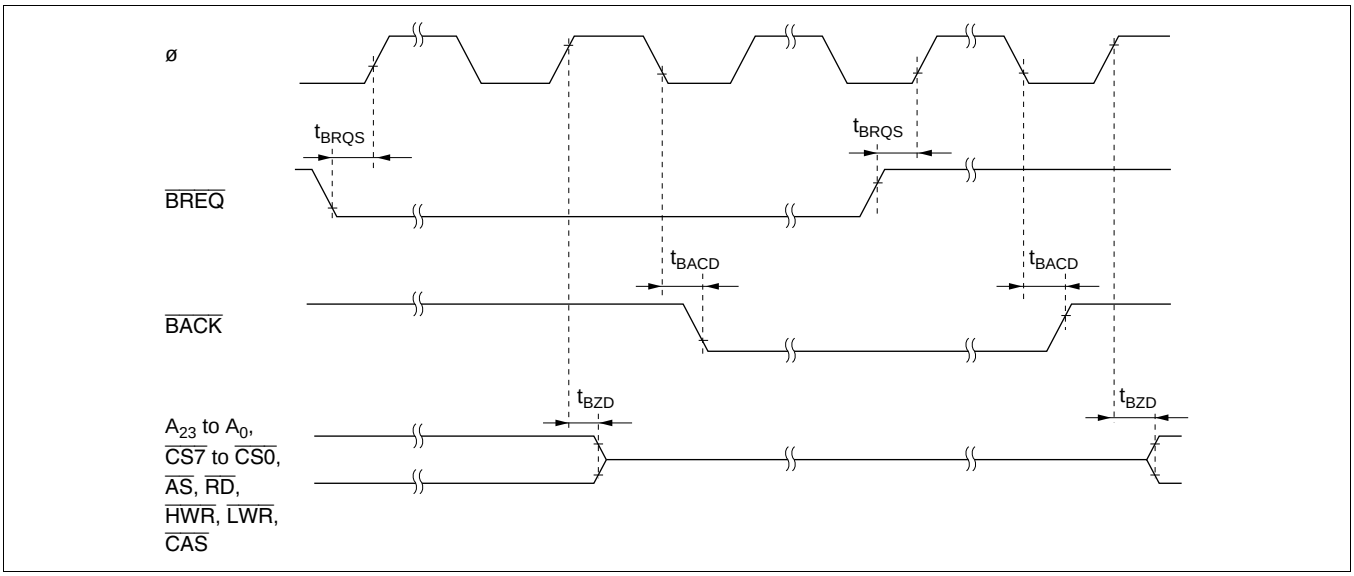

Figure 22-16 External Bus Release Timing

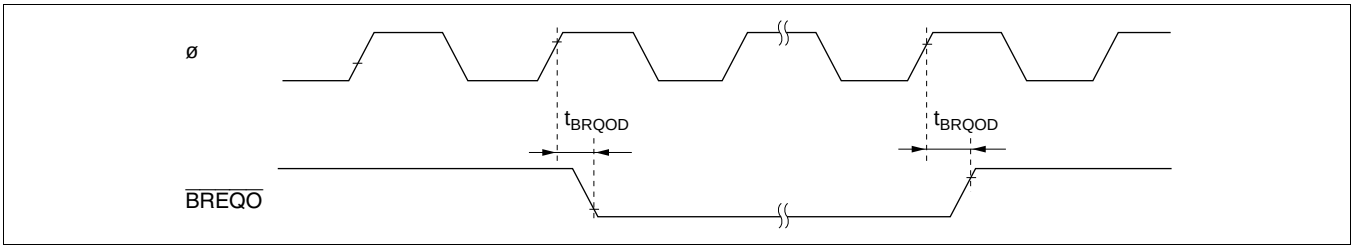

Figure 22-17 External Bus Request Output Timing

(4) DMAC Timing

Table 22-7 lists the DMAC timing.

Table 22-7 DMAC Timing

Conditions: V_{CC} = 5.0 V ± 10%, AV_{CC} = 5.0 V ± 10%, V_{ref} = 4.5 V to AV_{CC},
V_{SS} = AV_{SS} = 0 V, ø = 10 to 20 MHz, T_a = –20 to +75°C (regular specifications),
T_a = –40 to +85°C (wide-range specifications)

Item	Symbol	Condition Min	Condition Max	Unit	Test Conditions
$\overline{\text{DREQ}}$ setup time	t_{DRQS}	30	—	ns	Figure 22-21
$\overline{\text{DREQ}}$ hold time	t_{DRQH}	10	—		
$\overline{\text{TEND}}$ delay time	t_{TED}	—	20		Figure 22-20
$\overline{\text{DACK}}$ delay time 1	t_{DACD1}	—	20	ns	Figure 22-18, Figure 22-19
$\overline{\text{DACK}}$ delay time 2	t_{DACD2}	—	20		

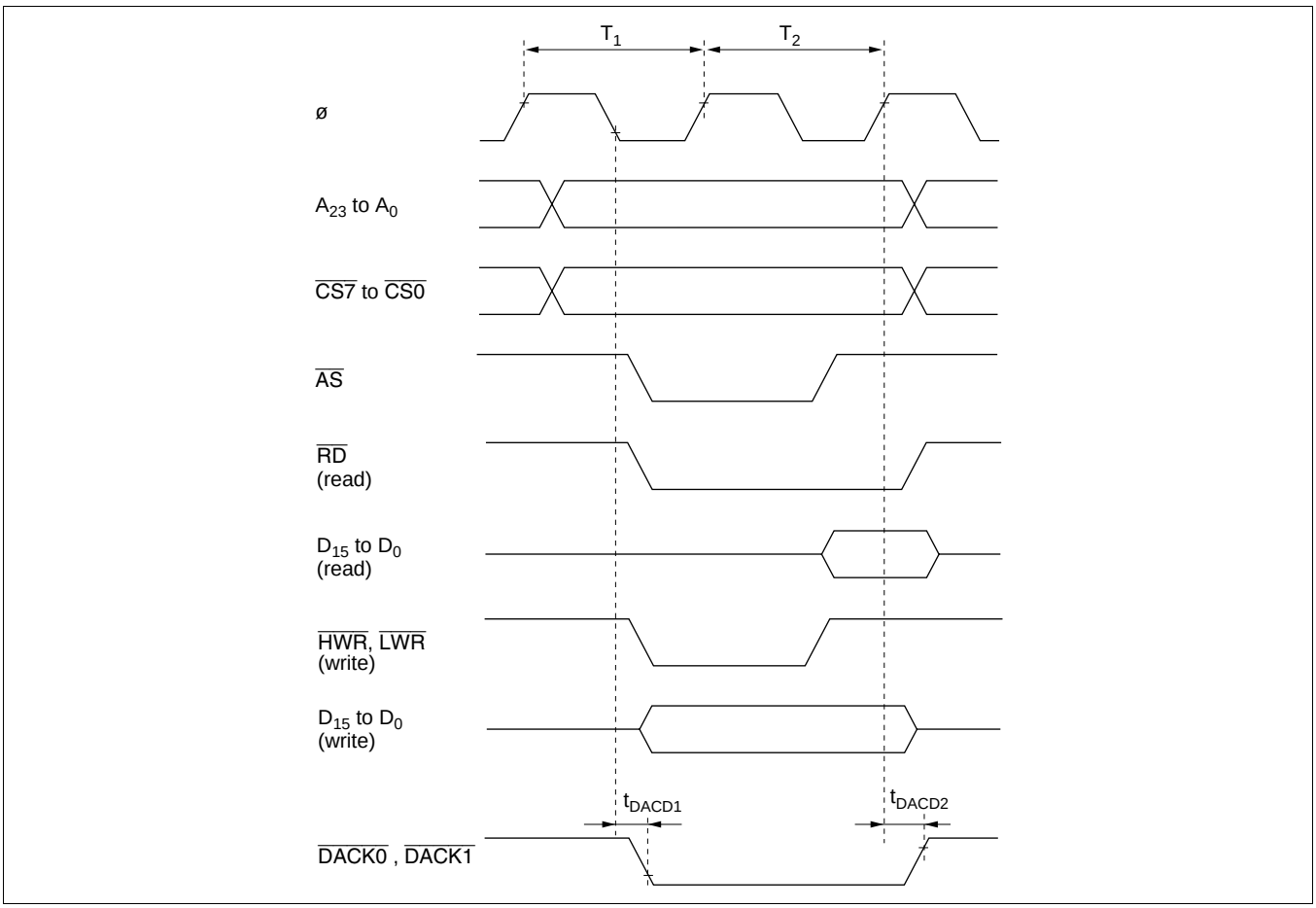

Figure 22-18 DMAC Single Address Transfer Timing (Two-State Access)

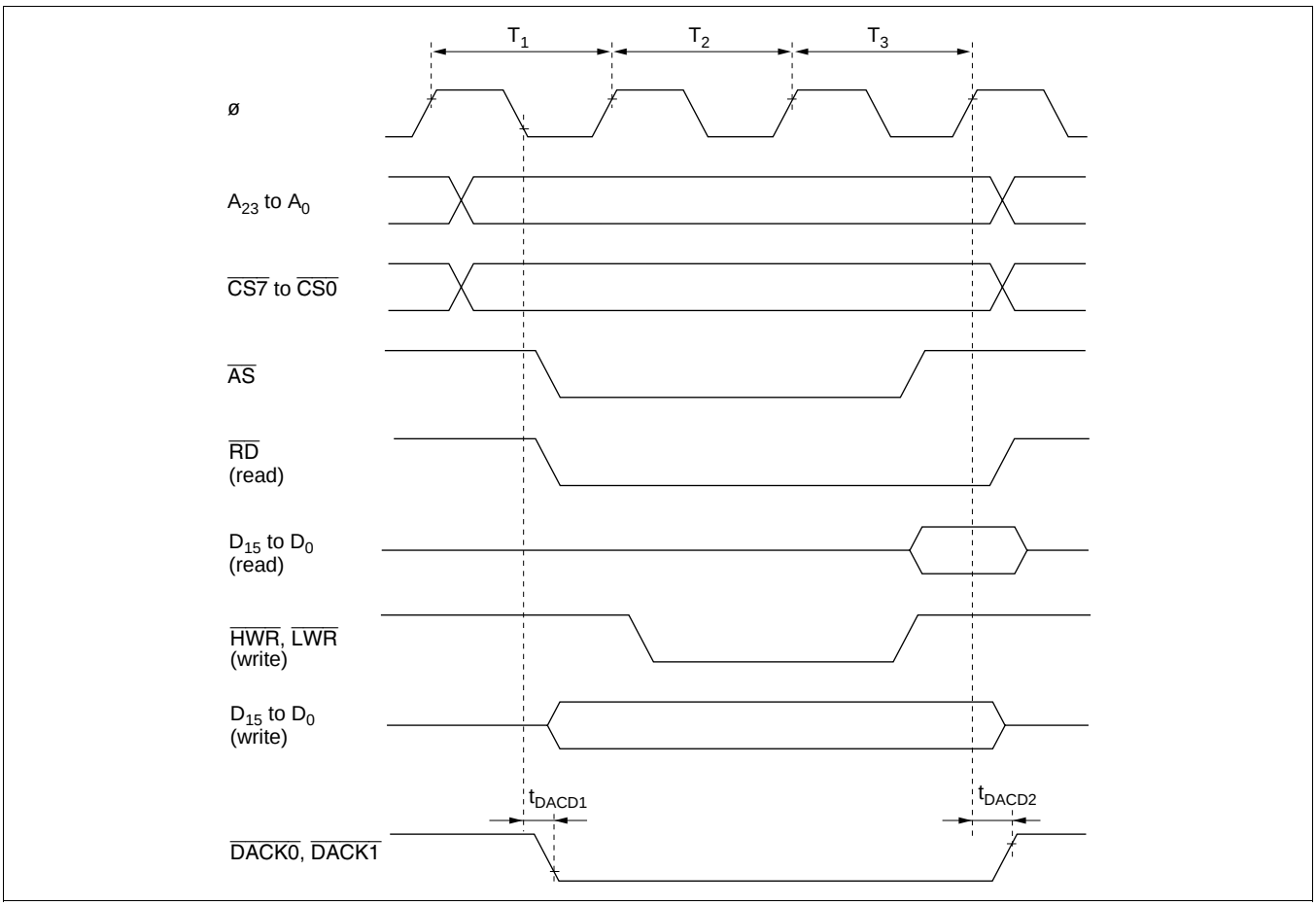

Figure 22-19 DMAC Single Address Transfer Timing (Three-State Access)

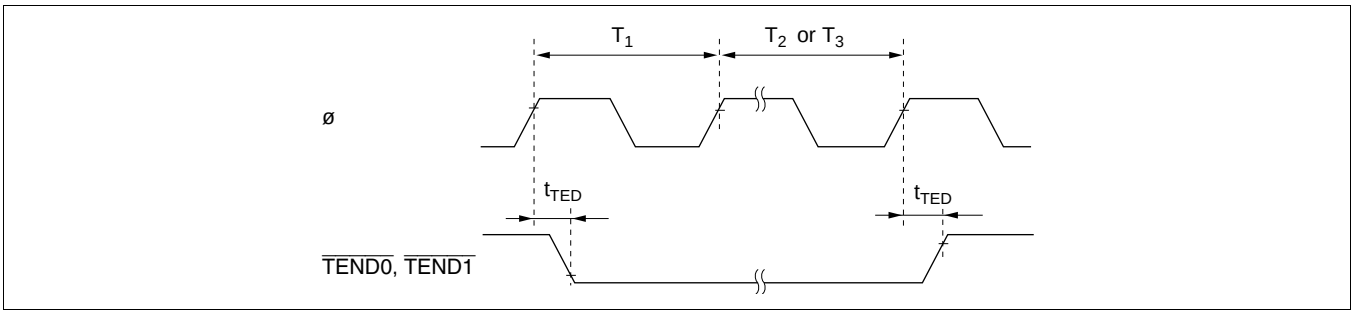

Figure 22-20 DMAC $\overline{\text{TEND}}$ Output Timing

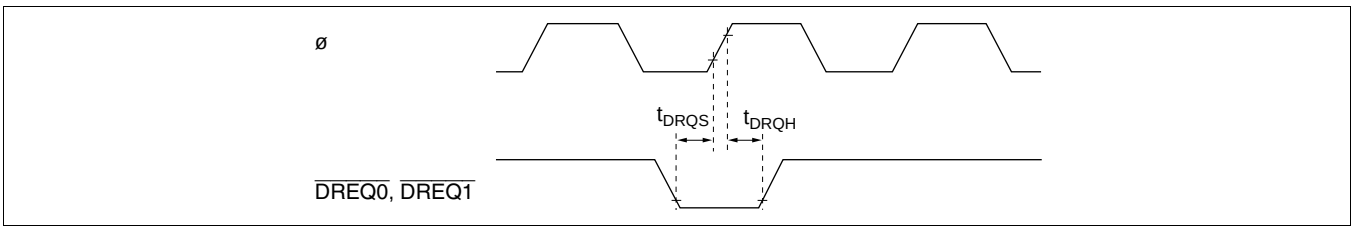

Figure 22-21 DMAC $\overline{\text{DREQ}}$ Intput Timing

(5) Timing of On-Chip Supporting Modules

Table 22-8 lists the timing of on-chip supporting modules.

Table 22-8 Timing of On-Chip Supporting Modules

Conditions: V_{CC} = 5.0 V ± 10%, AV_{CC} = 5.0 V ± 10%, V_{ref} = 4.5 V to AV_{CC},
V_{SS} = AV_{SS} = 0 V, ø = 10 to 20 MHz, T_a = –20 to +75°C (regular specifications),
T_a = –40 to +85°C (wide-range specifications)

Item			Symbol	Condition Min	Condition Max	Unit	Test Conditions
PORT	Output data delay time		t_{PWD}	—	50	ns	Figure 22-22
	Input data setup time		t_{PRS}	30	—		
	Input data hold time		t_{PRH}	30	—		
PPG	Pulse output delay time		t_{POD}	—	50	ns	Figure 22-23
TPU	Timer output delay time		t_{TOCD}	—	50	ns	Figure 22-24
	Timer input setup time		t_{TICS}	30	—		
	Timer clock input setup time		t_{TCKS}	30	—	ns	Figure 22-25
	Timer clock pulse width	Single edge	t_{TCKWH}	1.5	—	t_{cyc}	
		Both edges	t_{TCKWL}	2.5	—		
TMR	Timer output delay time		t_{TMOD}	—	50	ns	Figure 22-26
	Timer reset input setup time		t_{TMRS}	30	—	ns	Figure 22-28
	Timer clock input setup time		t_{TMCS}	30	—	ns	Figure 22-27
	Timer clock pulse width	Single edge	t_{TMCWH}	1.5	—	t_{cyc}	
		Both edges	t_{TMCWL}	2.5	—		
SCI	Input clock cycle	Asynchro-nous	t_{Scyc}	4	—	t_{cyc}	Figure 22-29
		Synchro-nous		6	—		
	Input clock pulse width		t_{SCKW}	0.4	0.6	t_{Scyc}	
	Input clock rise time		t_{SCKr}	—	1.5	t_{cyc}	
	Input clock fall time		t_{SCKf}	—	1.5		
	Transmit data delay time		t_{TXD}	—	50	ns	Figure 22-30
	Receive data setup time (synchronous)		t_{RXS}	50	—	ns	
	Receive data hold time (synchronous)		t_{RXH}	50	—	ns	
A/D con-verter	Trigger input setup time		t_{TRGS}	30	—	ns	Figure 22-31

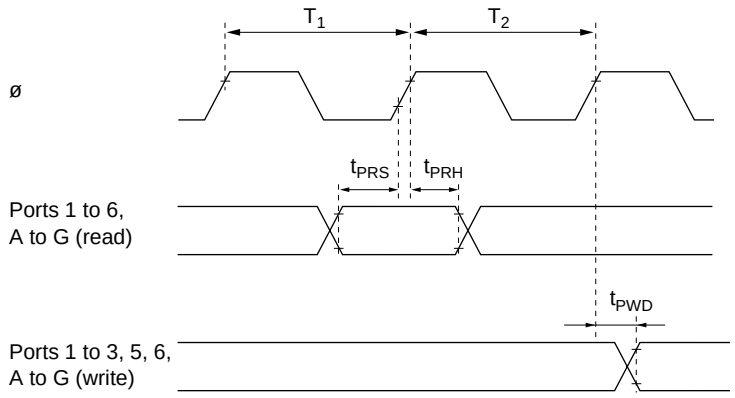

Figure 22-22 I/O Port Input/Output Timing

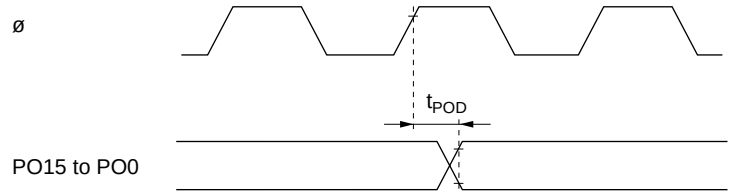

Figure 22-23 PPG Output Timing

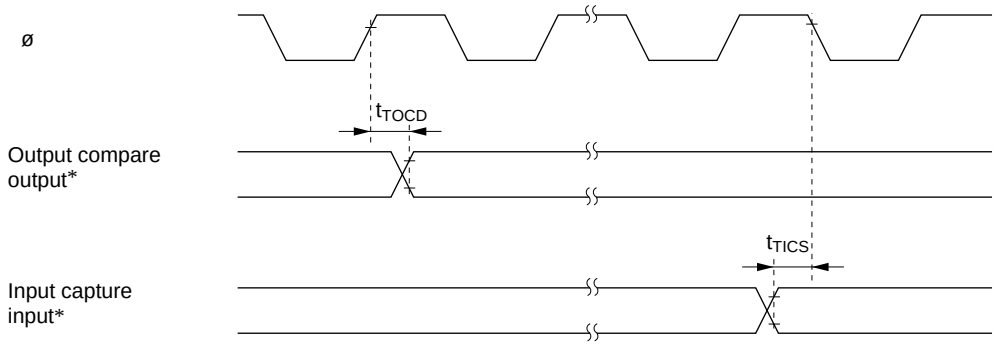

Note: * TIOCA0 to TIOCA5, TIOCB0 to TIOCB5, TIOCC0, TIOCC3, TIOCD0, TIOCD3

Figure 22-24 TPU Input/Output Timing

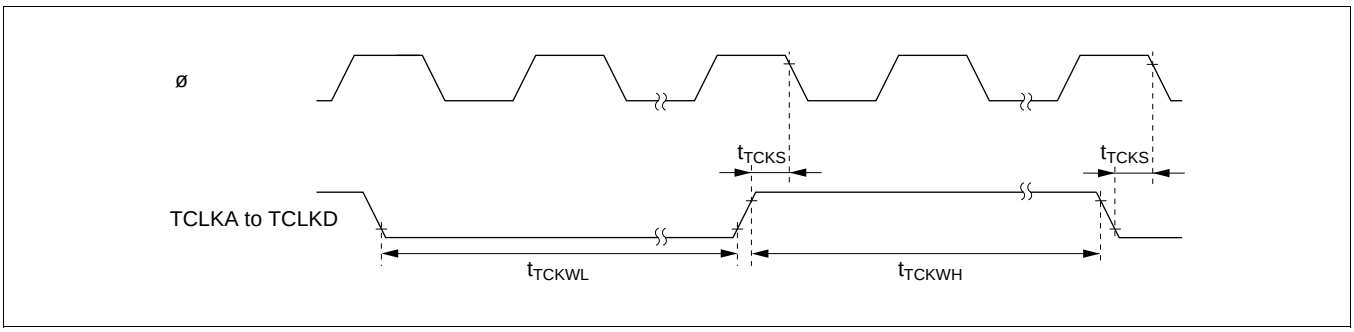

Figure 22-25 TPU Clock Input Timing

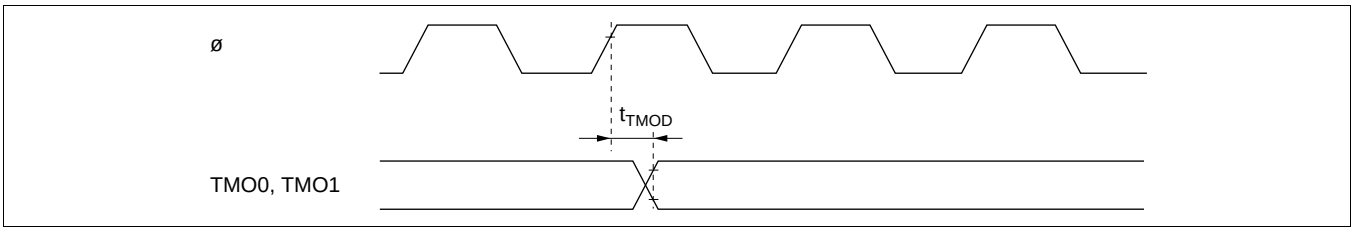

Figure 22-26 8-Bit Timer Output Timing

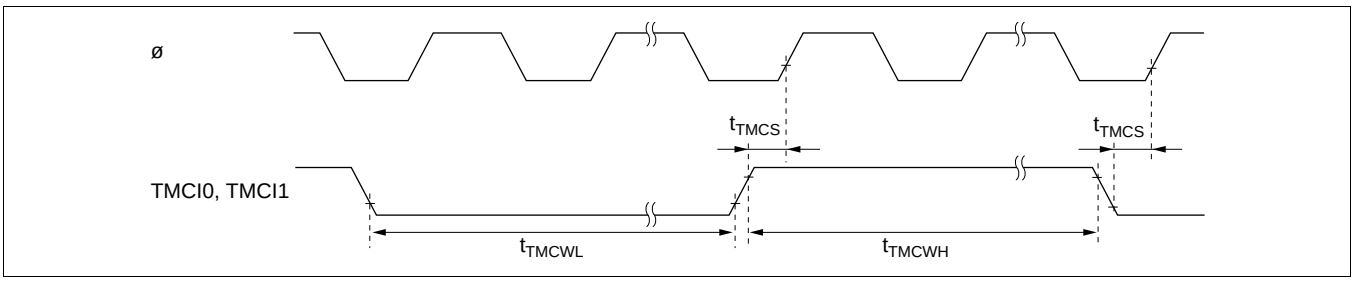

Figure 22-27 8-Bit Timer Clock Input Timing

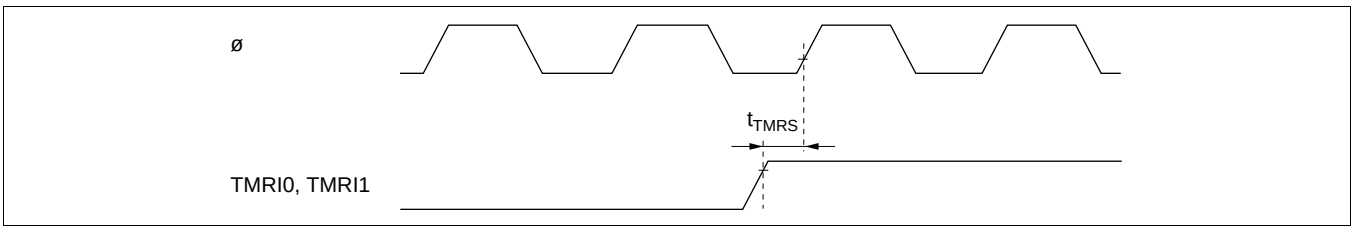

Figure 22-28 8-Bit Timer Reset Input Timing

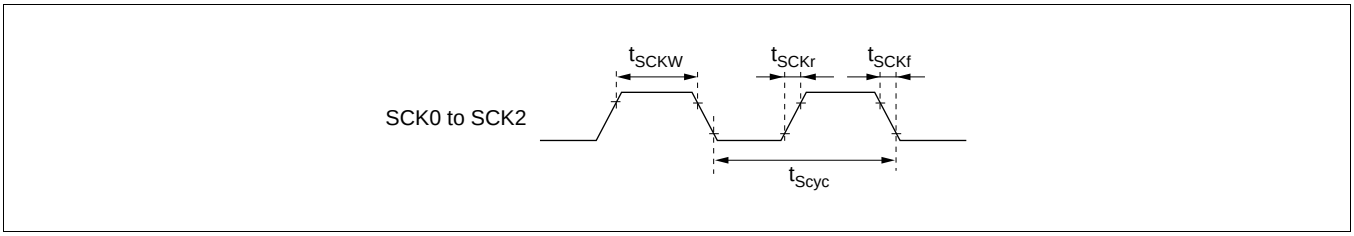

Figure 22-29 SCK Clock Input Timing

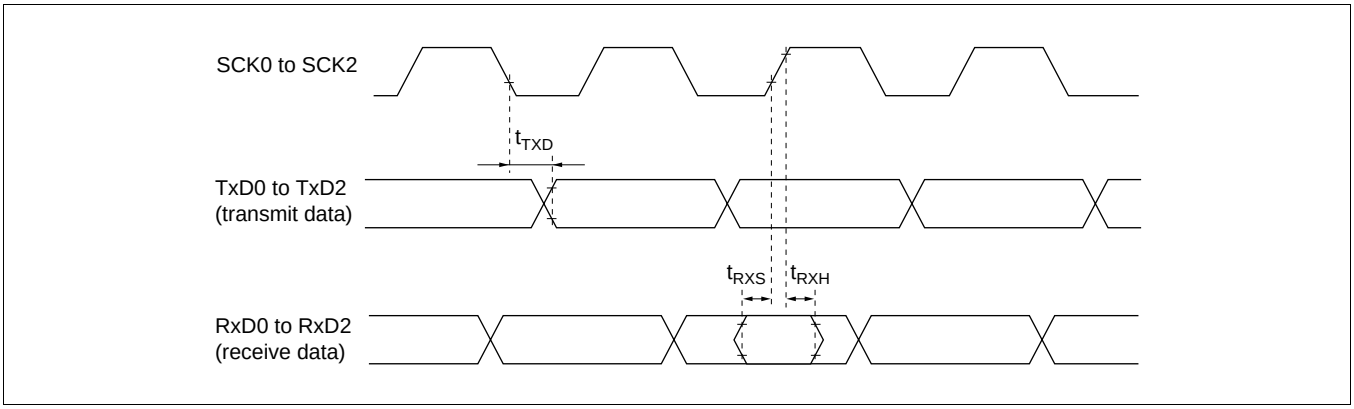

Figure 22-30 SCI Input/Output Timing (Clock Synchronous Mode)

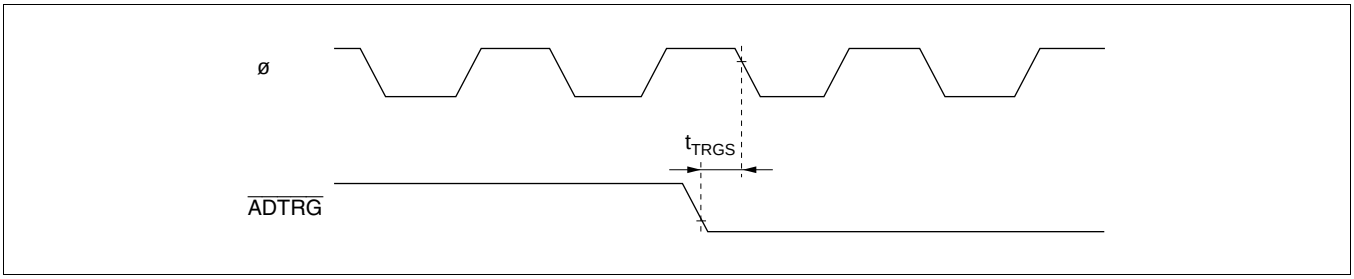

Figure 22-31 A/D Converter External Trigger Input Timing

22.1.4 A/D Conversion Characteristics

Table 22-9 lists the A/D conversion characteristics.

Table 22-9 A/D Conversion Characteristics

Conditions: $V_{CC} = AV_{CC} = 5.0$ V ± 10%, $V_{ref} = 4.5$ V to AV_{CC}, $V_{SS} = AV_{SS} = 0$ V,
ϕ = 10 to 20 MHz, T_a = –20 to +75°C (regular specifications),
T_a = –40 to +85°C (wide-range specifications)

Item	Min	Typ	Max	Unit
Resolution	10	10	10	bits
Conversion time	6.7	—	—	µs
Analog input capacitance	—	—	20	pF
Permissible signal-source impedance	—	—	10*[1]	kΩ
	—	—	5*[2]	
Nonlinearity error	—	—	±3.5	LSB
Offset error	—	—	±3.5	LSB
Full-scale error	—	—	±3.5	LSB
Quantization error	—	—	±0.5	LSB
Absolute accuracy	—	—	±4.0	LSB

Notes: 1. $\phi \leq 12$ MHz
2. $\phi > 12$ MHz

22.1.5 D/A Conversion Characteristics

Table 22-10 lists the D/A conversion characteristics.

Table 22-10 D/A Conversion Characteristics

Conditions: $V_{CC} = AV_{CC} = 5.0$ V ± 10%, $V_{ref} = 4.5$ V to AV_{CC}, $V_{SS} = AV_{SS} = 0$ V,
$\phi = 10$ to 20 MHz, $T_a = -20$ to +75°C (regular specifications),
$T_a = -40$ to +85°C (wide-range specifications)

Item	Min	Typ	Max	Unit	Test Conditions
Resolution	8	8	8	bits	
Conversion time	—	—	10	µs	20-pF capacitive load
Absolute accuracy	—	±1.0	±1.5	LSB	2-MΩ resistive load
	—	—	±1.0	LSB	4-MΩ resistive load

22.2 Usage Note (Internal Voltage Step Down for the H8S/2398, H8S/2394, H8S/2392, and H8S/2390)

The H8S/2398, H8S/2394, H8S/2392, or H8S/2390 have a voltage step down circuit that automatically lowers the power supply voltage, inside the microcomputer, to an adequate level. A capacitor (one 0.47-µF capacitor or two 0.47-µF capacitors connected in parallel) should be connected between the V_{CL} pin (a pin for internal voltage step down circuit) and V_{SS} pin to stabilize the internal voltage. Figure 22-32 shows how to connect the capacitor. Do not connect the V_{CC} power-supply to the V_{CL} pin. Doing so could permanently damage the LSI. (Connect the V_{CC} power-supply to the V_{CC} pin, in the usual way.)

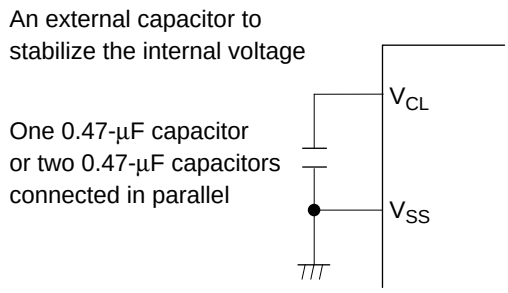

Do not connect the V_{CC} power-supply to the V_{CL} pin.
Doing so could permanently damage the LSI.
(Connect the V_{CC} power-supply to the other V_{CC} pin in the usual way.)
Use a multilayer ceramic capacitor (one 0.47-µF capacitor or two 0.47-µF capacitors connected in parallel) for this circuit, and place it/them near the V_{CL} pin.

Figure 22-32 V_{CL} Capacitor Connection Method

22.3 Electrical Characteristics of H8S/2398 F-ZTAT

22.3.1 Absolute Maximum Ratings

Table 22-11 Absolute Maximum Ratings

Item	Symbol	Value	Unit
Power supply voltage	V_{CC}*[1]	–0.3 to +7.0	V
Input voltage (except port 4)	V_{in}	–0.3 to + V_{CC} +0.3	V
Input voltage (port 4)	V_{in}	–0.3 to AV_{CC} +0.3	V
Reference voltage	V_{ref}	–0.3 to AV_{CC} +0.3	V
Analog power supply voltage	AV_{CC}	–0.3 to +7.0	V
Analog input voltage	V_{AN}	–0.3 to AV_{CC} +0.3	V
Operating temperature	T_{opr}	Regular specifications: –20 to +75*[2]	°C
		Wide-range specifications: –40 to +85*[2]	°C
Storage temperature	T_{stg}	–55 to +125	°C

Caution: Permanent damage to the chip may result if absolute maximum ratings are exceeded.

Notes: 1. Do not supply the power supply voltage to the V_{CL} pin. Doing so could permanently damage the LSI. Connect an external capacitor between the V_{CL} pin and the ground pin.

2. The operating temperature ranges for flash memory programming/erasing are as follows: T_a = 0 to +75°C (regular specifications), T_a = 0 to +85°C (wide-range specifications).

22.3.2 DC Characteristics

Table 22-12 lists the DC characteristics.
Table 22-13 lists the permissible output currents.

Table 22-12 DC Characteristics

Conditions: V_{CC} = 5.0 V ± 10%, AV_{CC} = 5.0 V ± 10%, V_{ref} = 4.5 V to AV_{CC}, V_{SS} = AV_{SS} = 0 V*[1], T_a = -20 to +75°C (regular specifications), T_a = -40 to +85°C (wide-range specifications)

Item		Symbol	Min	Typ	Max	Unit	Test Conditions
Schmitt trigger input voltage	Port 2, $P6_4$ to $P6_7$, PA_4 to PA_7	V_T^-	1.0	—	—	V	
		V_T^+	—	—	$V_{CC} \times 0.7$	V	
		$V_T^+ - V_T^-$	0.4	—	—	V	
Input high voltage	$\overline{RES}$, $\overline{STBY}$, NMI, MD_2 to MD_0	V_{IH}	V_{CC} – 0.7	—	V_{CC} + 0.3	V	
	EXTAL		$V_{CC} \times 0.7$	—	V_{CC} + 0.3	V	
	Ports 1, 3, 5, B to G, $P6_0$ to $P6_3$, PA_0 to PA_3		2.0	—	V_{CC} + 0.3	V	
	Port 4		2.0	—	AV_{CC} + 0.3	V	
Input low voltage	$\overline{RES}$, $\overline{STBY}$, MD_2 to MD_0	V_{IL}	–0.3	—	0.5	V	
	NMI, EXTAL, Ports 1, 3 to 5, B to G, $P6_0$ to $P6_3$, PA_0 to PA_3		–0.3	—	0.8	V	
Output high voltage	All output pins	V_{OH}	V_{CC} – 0.5	—	—	V	I_{OH} = –200 μA
			3.5	—	—	V	I_{OH} = –1 mA
Output low voltage	All output pins	V_{OL}	—	—	0.4	V	I_{OL} = 1.6 mA
	Ports 1, A to C		—	—	1.0	V	I_{OL} = 10 mA
Input leakage current	$\overline{RES}$	$\lvert I_{in} \rvert$	—	—	10.0	μA	V_{in} = 0.5 V to V_{CC} – 0.5 V
	$\overline{STBY}$, NMI, MD_2 to MD_0		—	—	1.0	μA	
	Port 4		—	—	1.0	μA	V_{in} = 0.5 V to AV_{CC} – 0.5 V
Three-state leakage current (off state)	Ports 1 to 3, 5, 6, A to G	$\lvert I_{TSI} \rvert$	—	—	1.0	μA	V_{in} = 0.5 V to V_{CC} – 0.5 V
MOS input pull-up current	Ports A to E	$-I_P$	50	—	300	μA	V_{in} = 0 V
Input capacitance	$\overline{RES}$	C_{in}	—	—	80	pF	V_{in} = 0 V f = 1 MHz T_a = 25°C
	NMI		—	—	50	pF	
	All input pins except $\overline{RES}$ and NMI		—	—	15	pF	

Item		Symbol	Min	Typ	Max	Unit	Test Conditions
Current dissipation*2	Normal operation	I_{CC}*4	—	46 (5.0 V)	69	mA	f = 20 MHz
	Sleep mode		—	37 (5.0 V)	56	mA	f = 20 MHz
	Standby mode*3		—	0.01	10	μA	$T_a \leq 50°C$
			—	—	80		$50°C < T_a$
Analog power supply current	During A/D and D/A conversion	AI_{CC}	—	0.8 (5.0 V)	2.0	mA	
	Idle		—	0.01	5.0	μA	
Reference current	During A/D and D/A conversion	AI_{CC}	—	2.2 (5.0 V)	3.0	mA	
	Idle		—	0.01	5.0	μA	
RAM standby voltage		V_{RAM}	2.0	—	—	V	

Notes: 1. If the A/D and D/A converters are not used, do not leave the AV_{CC}, AV_{SS}, and V_{ref} pins open. Connect AV_{CC} and V_{ref} to V_{CC} pin, and connect AV_{SS} to V_{SS} pin.

2. Current dissipation values are for V_{IH} min = V_{CC} -0.2 V and V_{IL} max = 0.5 V with all output pins unloaded and the on-chip pull-up MOS in the off state.

3. The values are for $V_{RAM} \leq V_{CC} < 4.5$ V, V_{IH} min = $V_{CC} \times 0.9$, and V_{IL} max = 0.3 V.

4. I_{CC} depends on V_{CC} and f as follows:
I_{CC} max = 3.0 (mA) + 0.60 (mA/(MHz × V)) × V_{CC} × f [normal mode]
I_{CC} max = 3.0 (mA) + 0.48 (mA/(MHz × V)) × V_{CC} × f [sleep mode]

Table 22-13 Permissible Output Currents

Conditions: V_{CC} = 5.0 V ± 10%, AV_{CC} = 5.0 V ± 10%, V_{ref} = 4.5 V to AV_{CC}, V_{SS} = AV_{SS} = 0 V, T_a = –20 to +75°C (regular specifications), T_a = –40 to +85°C (wide-range specifications)

Item		Symbol	Min	Typ	Max	Unit
Permissible output low current (per pin)	Ports 1, A to C	I_{OL}	—	—	10	mA
	Other output pins		—	—	2.0	mA
Permissible output low current (total)	Total of 32 pins including ports 1 and A to C	ΣI_{OL}	—	—	80	mA
	Total of all output pins, including the above		—	—	120	mA
Permissible output high current (per pin)	All output pins	$-I_{OH}$	—	—	2.0	mA
Permissible output high current (total)	Total of all output pins	$\Sigma -I_{OH}$	—	—	40	mA

Notes: 1. To protect chip reliability, do not exceed the output current values in table 22-13.

2. When driving a darlington pair or LED directly, always insert a current-limiting resistor in the output line, as show in figures 22-33 and 22-34.

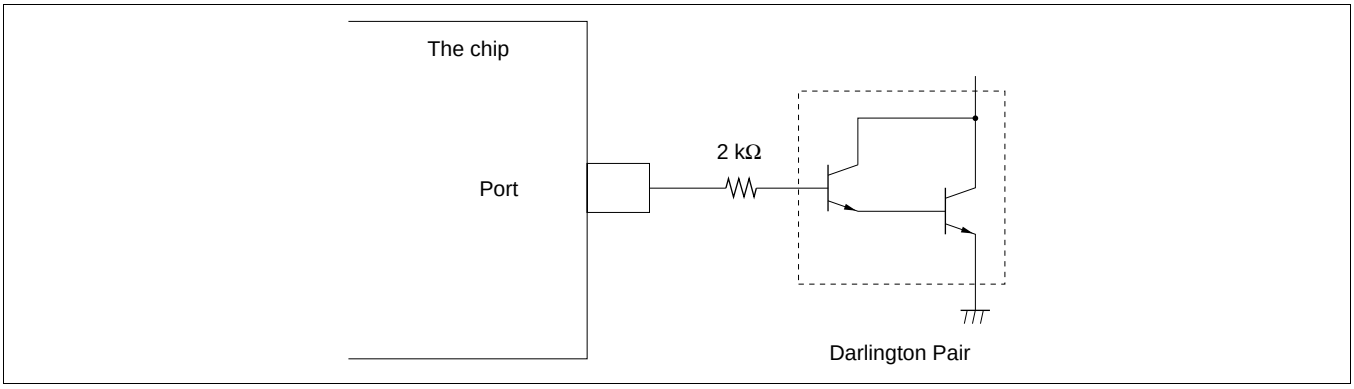

Figure 22-33 Darlington Pair Drive Circuit (Example)

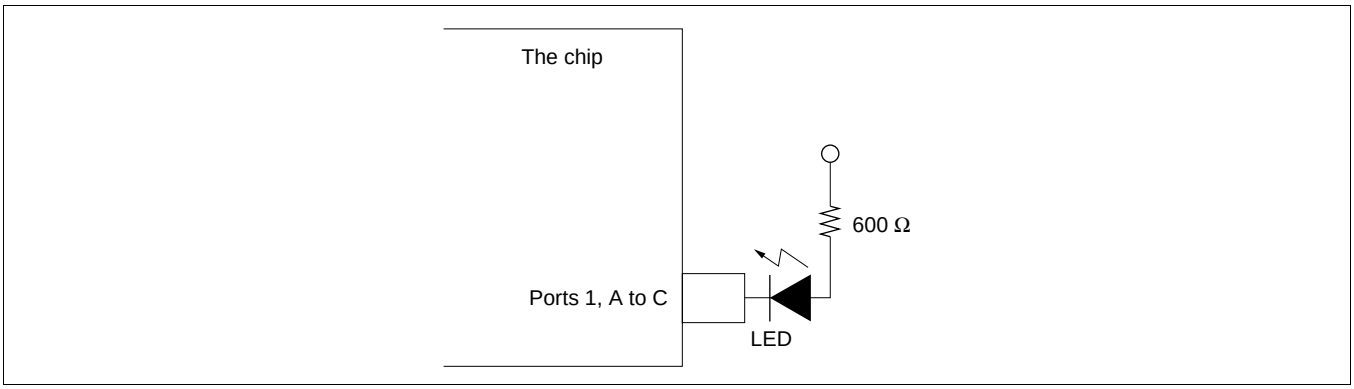

Figure 22-34 LED Drive Circuit (Example)

22.3.3 AC Characteristics

Figure 22-35 show, the test conditions for the AC characteristics.

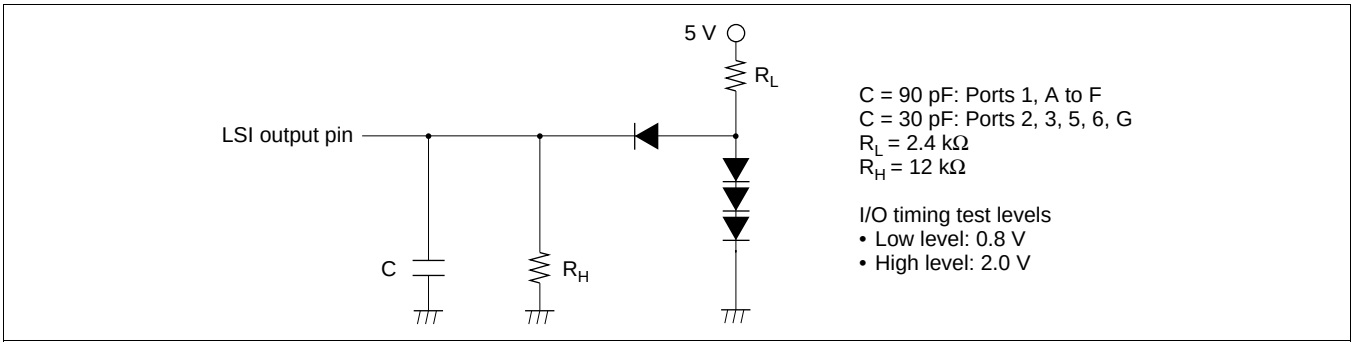

Figure 22-35 Output Load Circuit

(1) Clock Timing

Table 22-14 lists the clock timing

Table 22-14 Clock Timing

Conditions: V_{CC} = 5.0 V ± 10%, AV_{CC} = 5.0 V ± 10%, V_{ref} = 4.5 V to AV_{CC},
V_{SS} = AV_{SS} = 0 V, ø = 10 to 20 MHz, T_a = –20 to +75°C (regular specifications),
T_a = –40 to +85°C (wide-range specifications)

Item	Symbol	Condition Min	Condition Max	Unit	Test Conditions
Clock cycle time	t_{cyc}	50	100	ns	Figure 22-36
Clock high pulse width	t_{CH}	20	—	ns	
Clock low pulse width	t_{CL}	20	—	ns	
Clock rise time	t_{Cr}	—	5	ns	
Clock fall time	t_{Cf}	—	5	ns	
Clock oscillator setting time at reset (crystal)	t_{OSC1}	10	—	ms	Figure 22-37
Clock oscillator setting time in software standby (crystal)	t_{OSC2}	10	—	ms	Figure 21-2
External clock output stabilization delay time	t_{DEXT}	500	—	µs	Figure 22-37

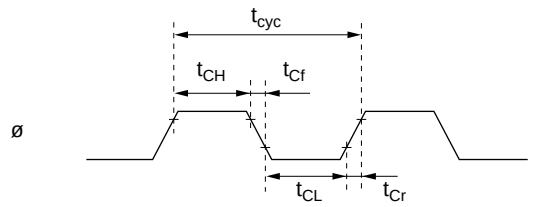

Figure 22-36 System Clock Timing

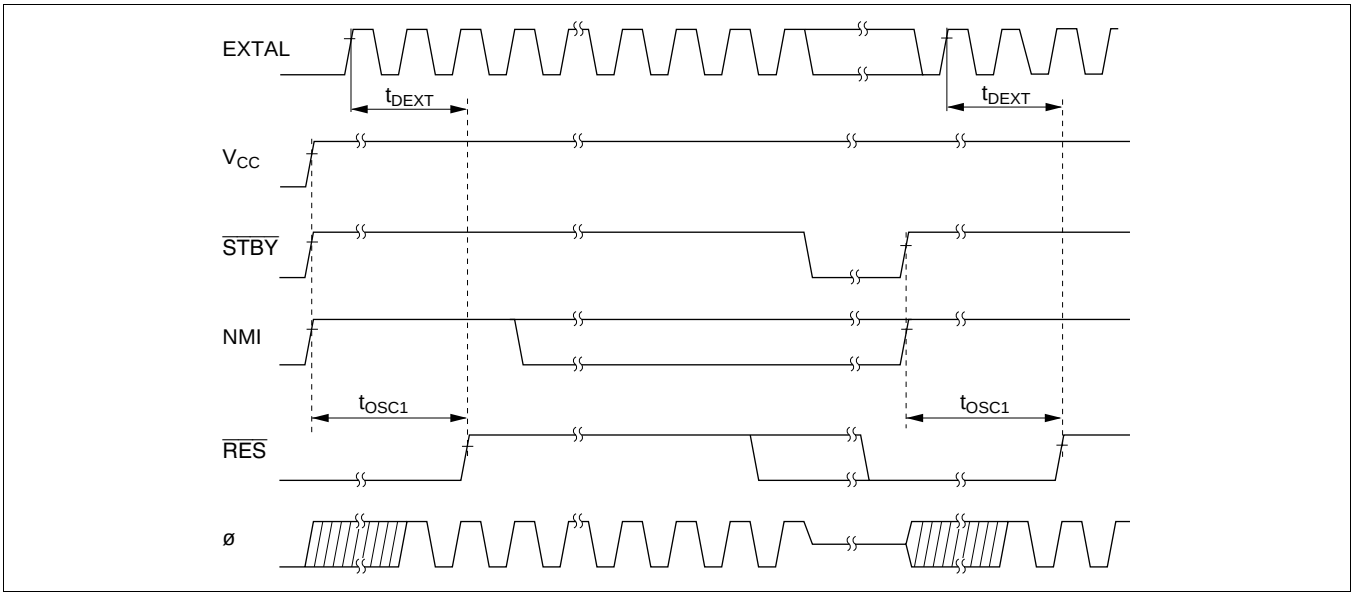

Figure 22-37 Oscillator Settling Timing

(2) Control Signal Timing

Table 22-15 lists the control signal timing.

Table 22-15 Control Signal Timing

Conditions: V_{CC} = 5.0 V ± 10%, AV_{CC} = 5.0 V ± 10%, V_{ref} = 4.5 V to AV_{CC},
V_{SS} = AV_{SS} = 0 V, ø = 10 to 20 MHz, T_a = –20 to +75°C (regular specifications),
T_a = –40 to +85°C (wide-range specifications)

Item	Symbol	Condition Min	Condition Max	Unit	Test Conditions
$\overline{RES}$ setup time	t_{RESS}	200	—	ns	Figure 22-38
$\overline{RES}$ pulse width	t_{RESW}	20	—	t_{cyc}	
NMI setup time	t_{NMIS}	150	—	ns	Figure 22-39
NMI hold time	t_{NMIH}	10	—	ns	
NMI pulse width (exiting software standby mode)	t_{NMIW}	200	—	ns	
$\overline{IRQ}$ setup time	t_{IRQS}	150	—	ns	
$\overline{IRQ}$ hold time	t_{IRQH}	10	—	ns	
$\overline{IRQ}$ pulse width (exiting software standby mode)	t_{IRQW}	200	—	ns	

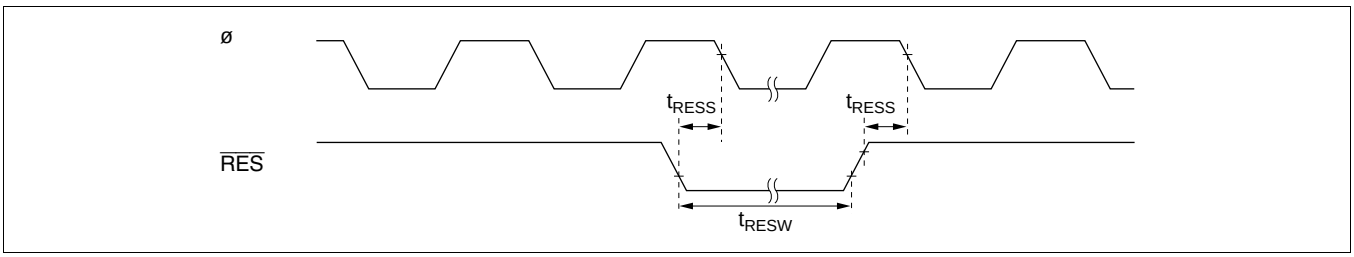

Figure 22-38 Reset Input Timing

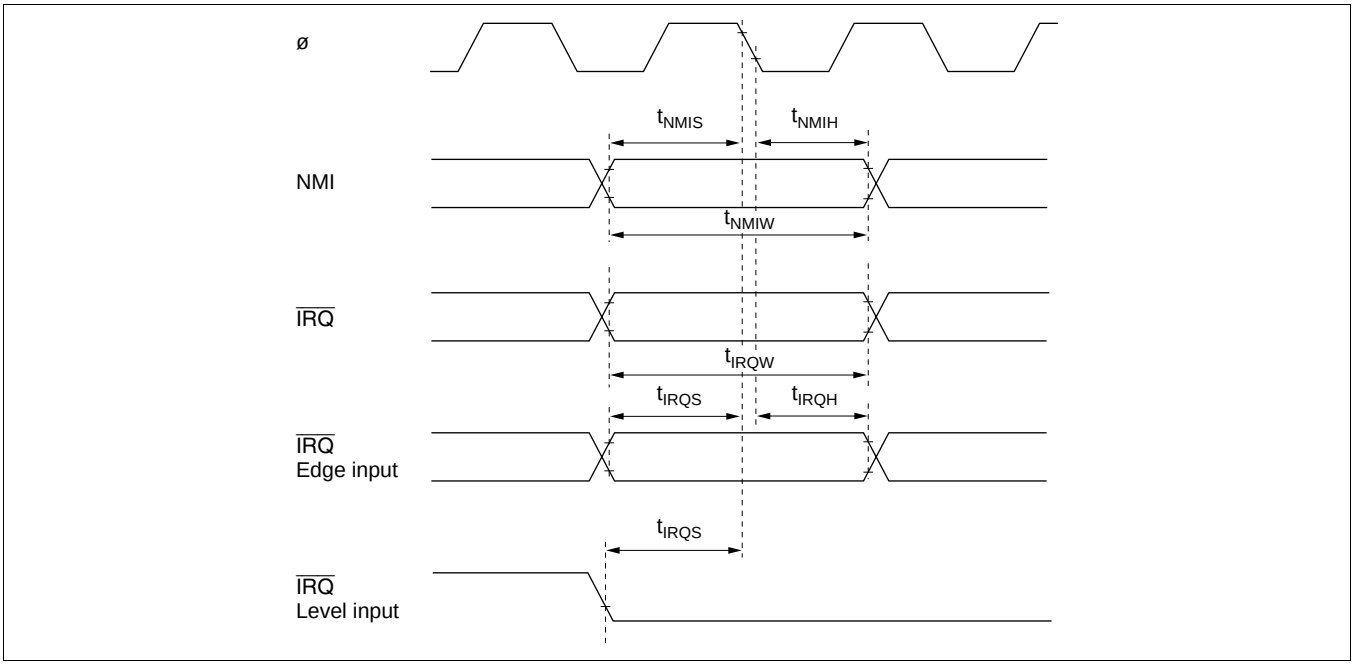

Figure 22-39 Interrupt Input Timing

(3) Bus Timing

Table 22-16 lists the bus timing.

Table 22-16 Bus Timing

Conditions: V_{CC} = 5.0 V ± 10%, AV_{CC} = 5.0 V ± 10%, V_{ref} = 4.5 V to AV_{CC},
V_{SS} = AV_{SS} = 0 V, ø= 10 to 20 MHz, T_a = –20 to +75°C (regular specifications),
T_a = –40 to +85°C (wide-range specifications)

		Condition			Test
Item	**Symbol**	**Min**	**Max**	**Unit**	**Conditions**
Address delay time	t_{AD}	—	20	ns	Figure 22-40 to Figure 22-47
Address setup time	t_{AS}	0.5 × t_{cyc} – 15	—	ns	
Address hold time	t_{AH}	0.5 × t_{cyc} – 10	—	ns	
Precharge time	t_{PCH}	1.5 × t_{cyc} – 20	—	ns	
$\overline{CS}$ delay time 1	t_{CSD1}	—	20	ns	
$\overline{CS}$ delay time 2	t_{CSD2}	—	20	ns	
$\overline{CS}$ delay time 3	t_{CSD3}	—	25	ns	
$\overline{AS}$ delay time	t_{ASD}	—	20	ns	
$\overline{RD}$ delay time 1	t_{RSD1}	—	20	ns	
$\overline{RD}$ delay time 2	t_{RSD2}	—	20	ns	
$\overline{CAS}$ delay time	t_{CASD}	—	20	ns	
Read data setup time	t_{RDS}	15	—	ns	
Read data hold time	t_{RDH}	0	—	ns	
Read data access time 1	t_{ACC1}	—	1.0 × t_{cyc} – 25	ns	
Read data access time 2	t_{ACC2}	—	1.5 × t_{cyc} – 25	ns	
Read data access time 3	t_{ACC3}	—	2.0 × t_{cyc} – 25	ns	
Read data access time 4	t_{ACC4}	—	2.5 × t_{cyc} – 25	ns	
Read data access time 5	t_{ACC5}	—	3.0 × t_{cyc} – 25	ns	
$\overline{WR}$ delay time 1	t_{WRD1}	—	20	ns	
$\overline{WR}$ delay time 2	t_{WRD2}	—	20	ns	
$\overline{WR}$ pulse width 1	t_{WSW1}	1.0 × t_{cyc} – 20	—	ns	
$\overline{WR}$ pulse width 2	t_{WSW2}	1.5 × t_{cyc} – 20	—	ns	
Write data delay time	t_{WDD}	—	30	ns	
Write data setup time	t_{WDS}	0.5 × t_{cyc} – 20	—	ns	
Write data hold time	t_{WDH}	0.5 × t_{cyc} – 10	—	ns	
$\overline{WR}$ setup time	t_{WCS}	0.5 × t_{cyc} – 10	—	ns	

Item	Symbol	Condition Min	Condition Max	Unit	Test Conditions
$\overline{WR}$ hold time	t_{WCH}	0.5 × t_{cyc} – 10	—	ns	Figure 22-40 to Figure 22-47
$\overline{CAS}$ setup time	t_{CSR}	0.5 × t_{cyc} – 10	—	ns	Figure 22-44
$\overline{WAIT}$ setup time	t_{WTS}	30	—	ns	Figure 22-42
$\overline{WAIT}$ hold time	t_{WTH}	5	—	ns	
$\overline{BREQ}$ setup time	t_{BRQS}	30	—	ns	Figure 22-48
$\overline{BACK}$ delay time	t_{BACD}	—	15	ns	
Bus-floating time	t_{BZD}	—	50	ns	
$\overline{BREQO}$ delay time	t_{BRQOD}	—	30	ns	Figure 22-49

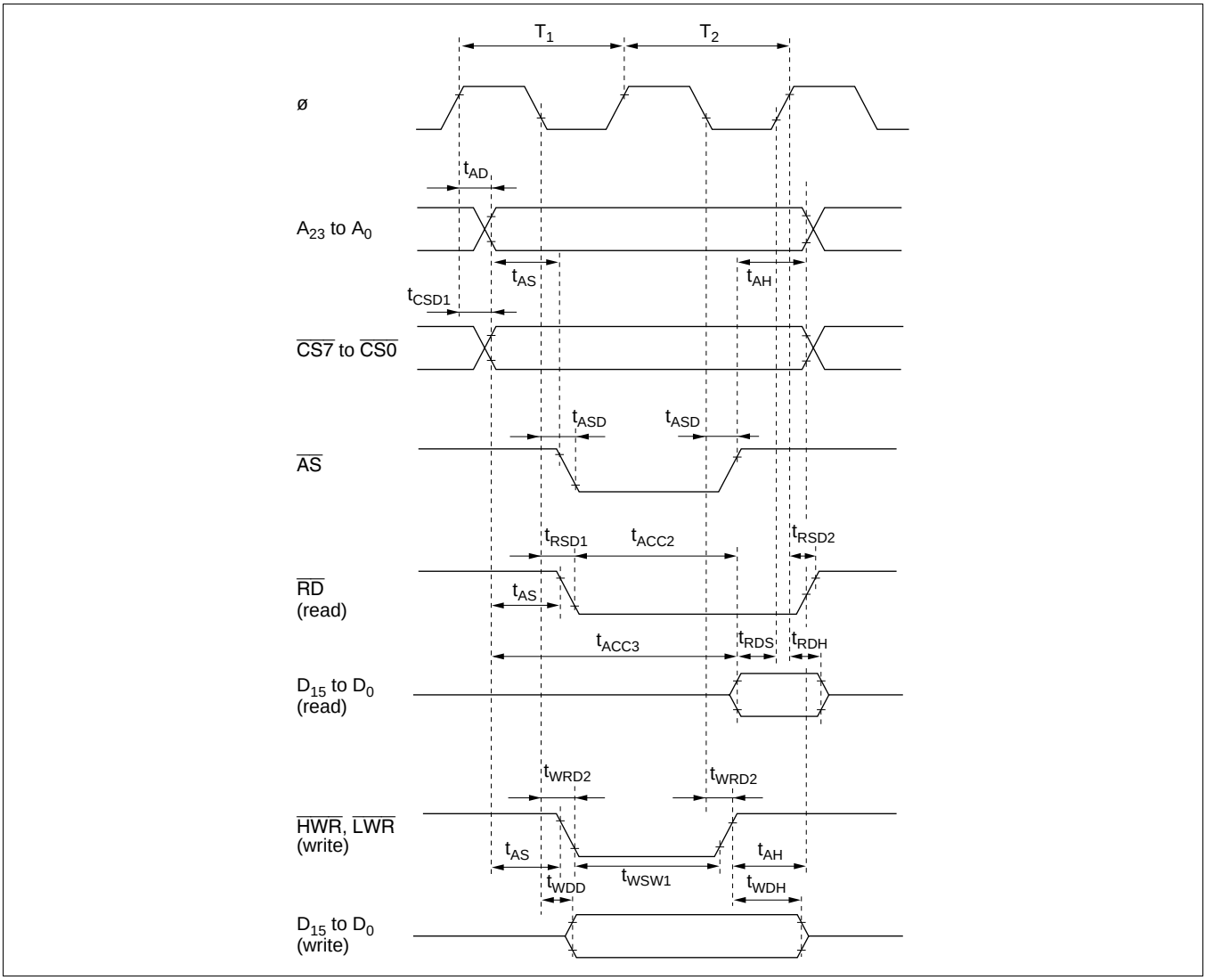

Figure 22-40 Basic Bus Timing (Two-State Access)

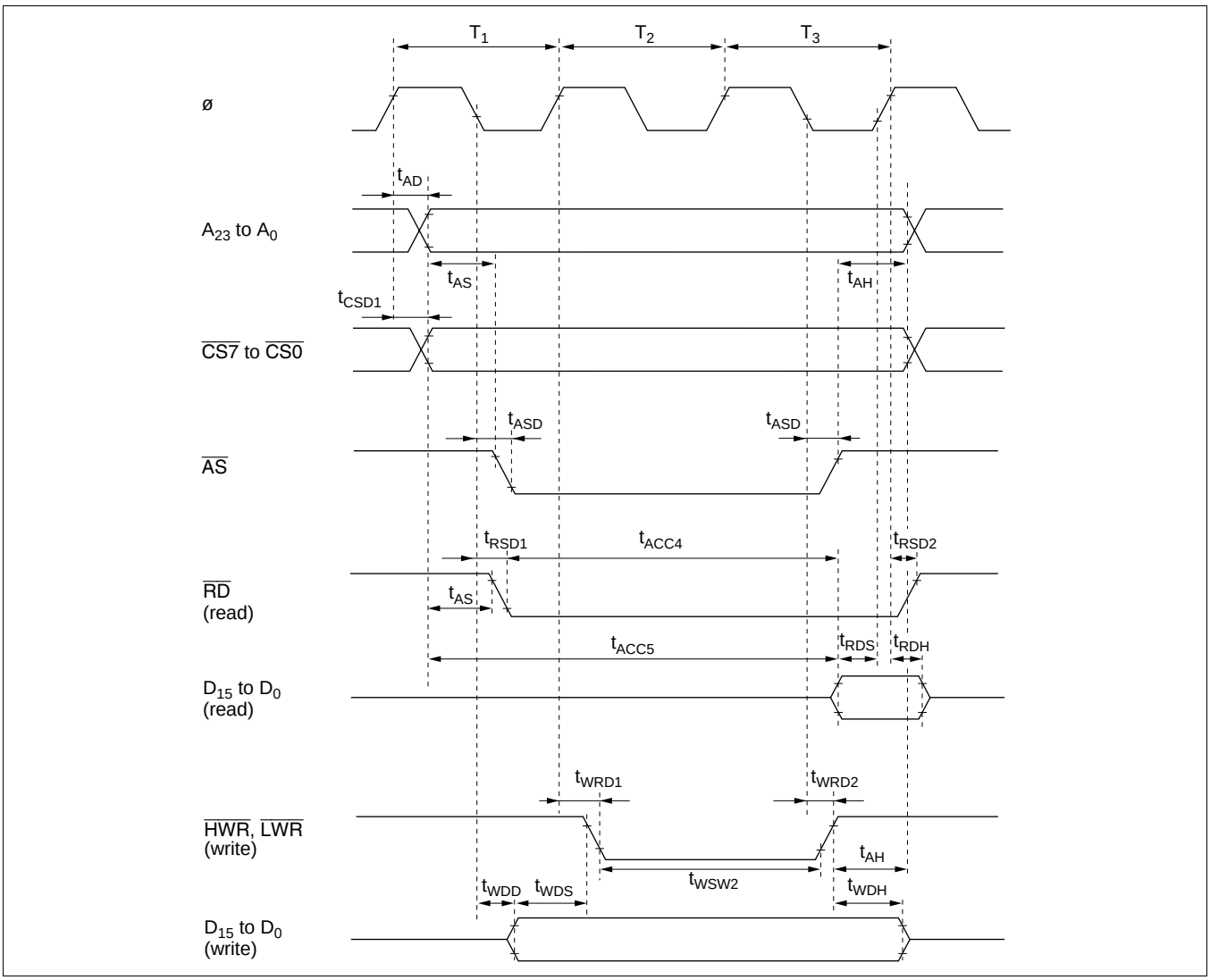

Figure 22-41 Basic Bus Timing (Three-State Access)

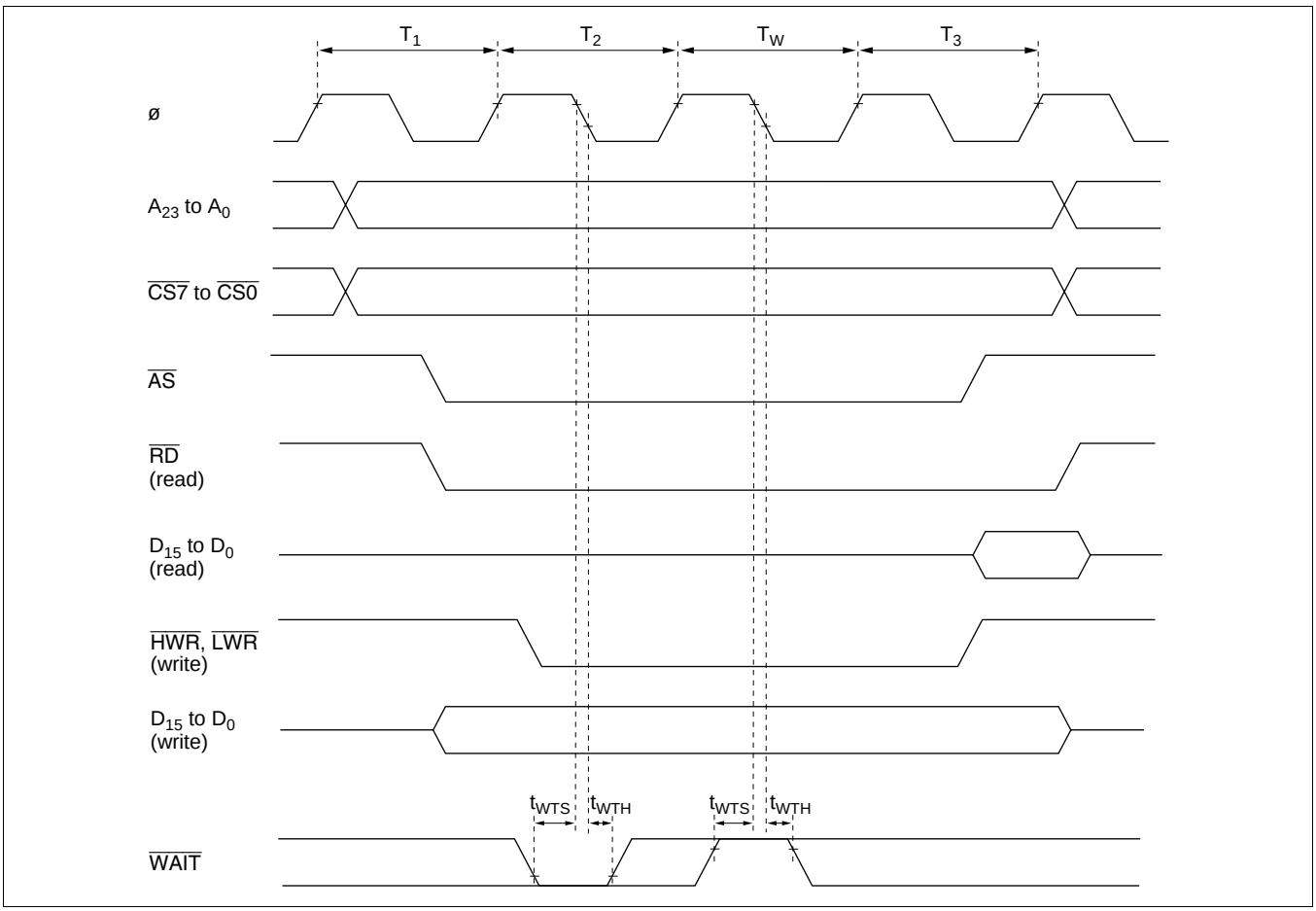

Figure 22-42 Basic Bus Timing (Three-State Access with One Wait State)

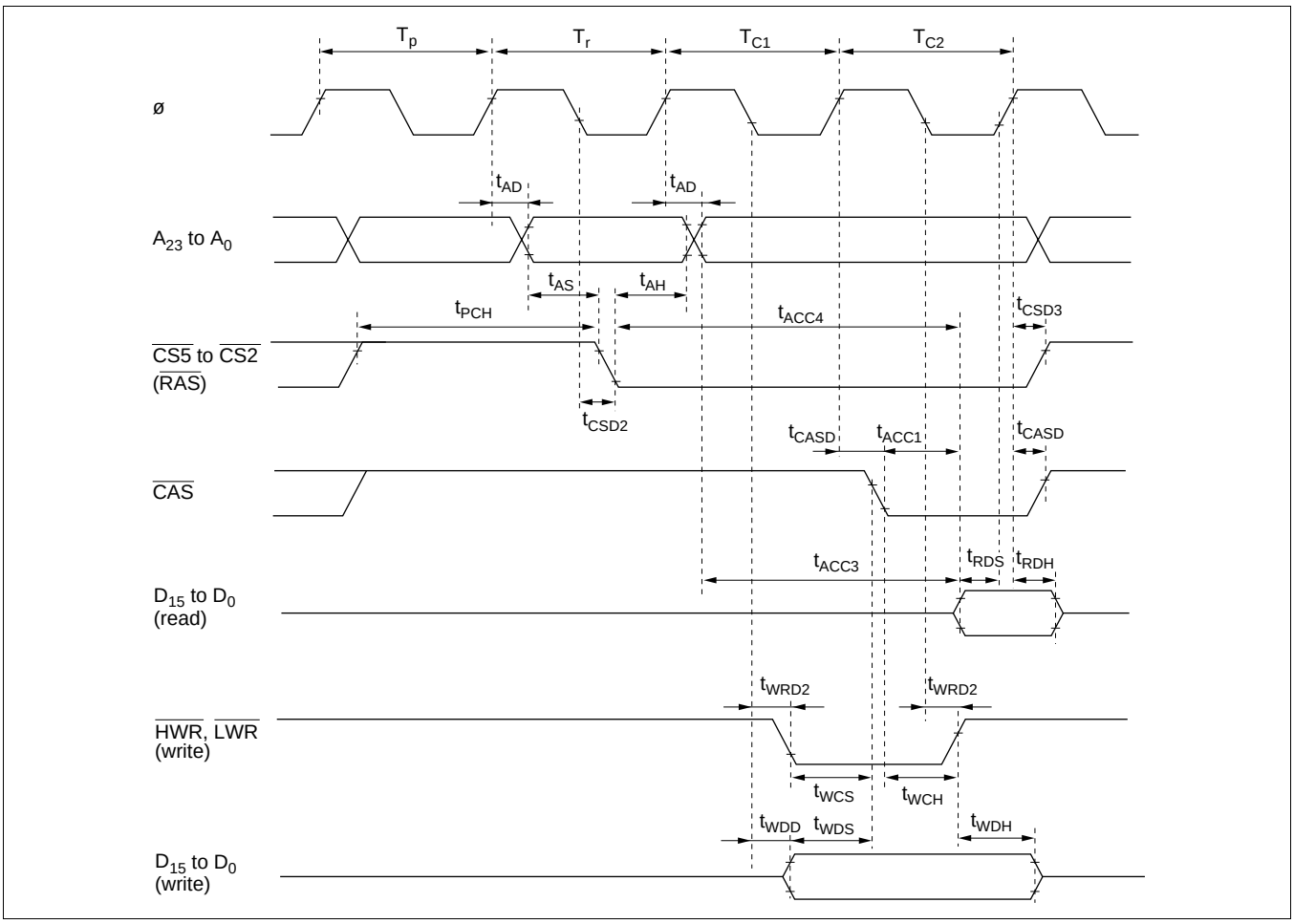

Figure 22-43 DRAM Bus Timing

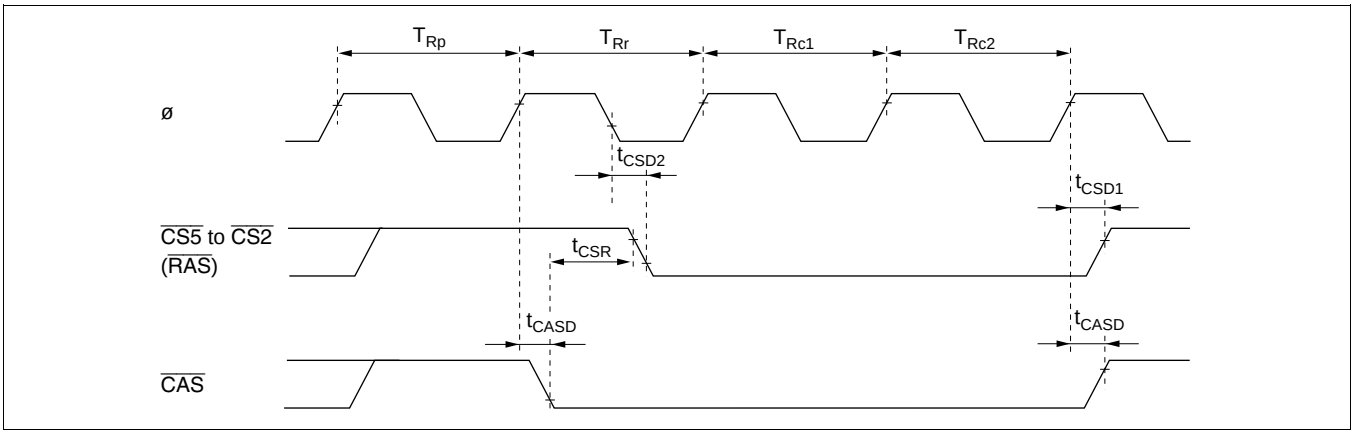

Figure 22-44 CAS-Before-RAS Refresh Timing

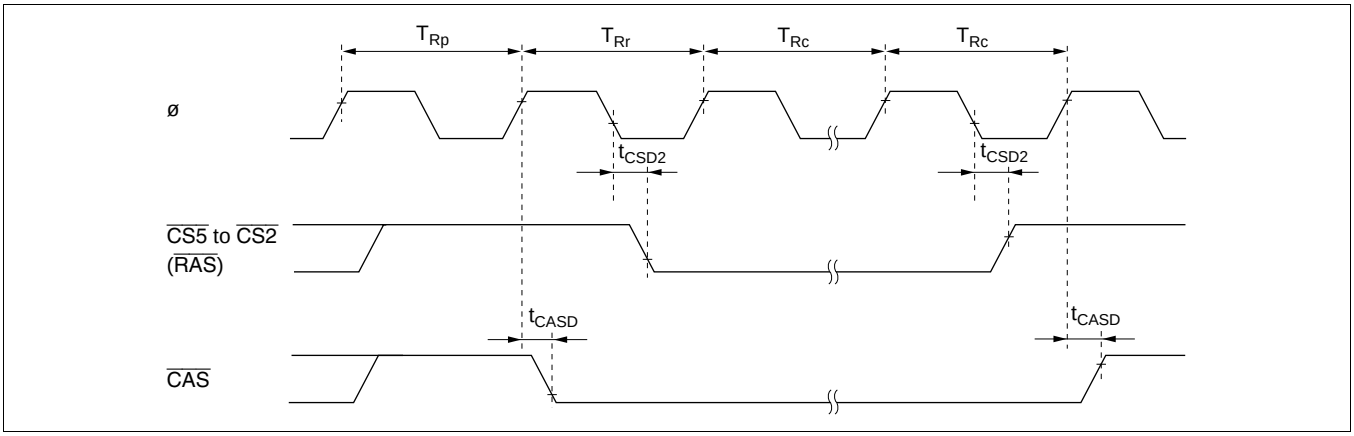

Figure 22-45 Self-Refresh Timing

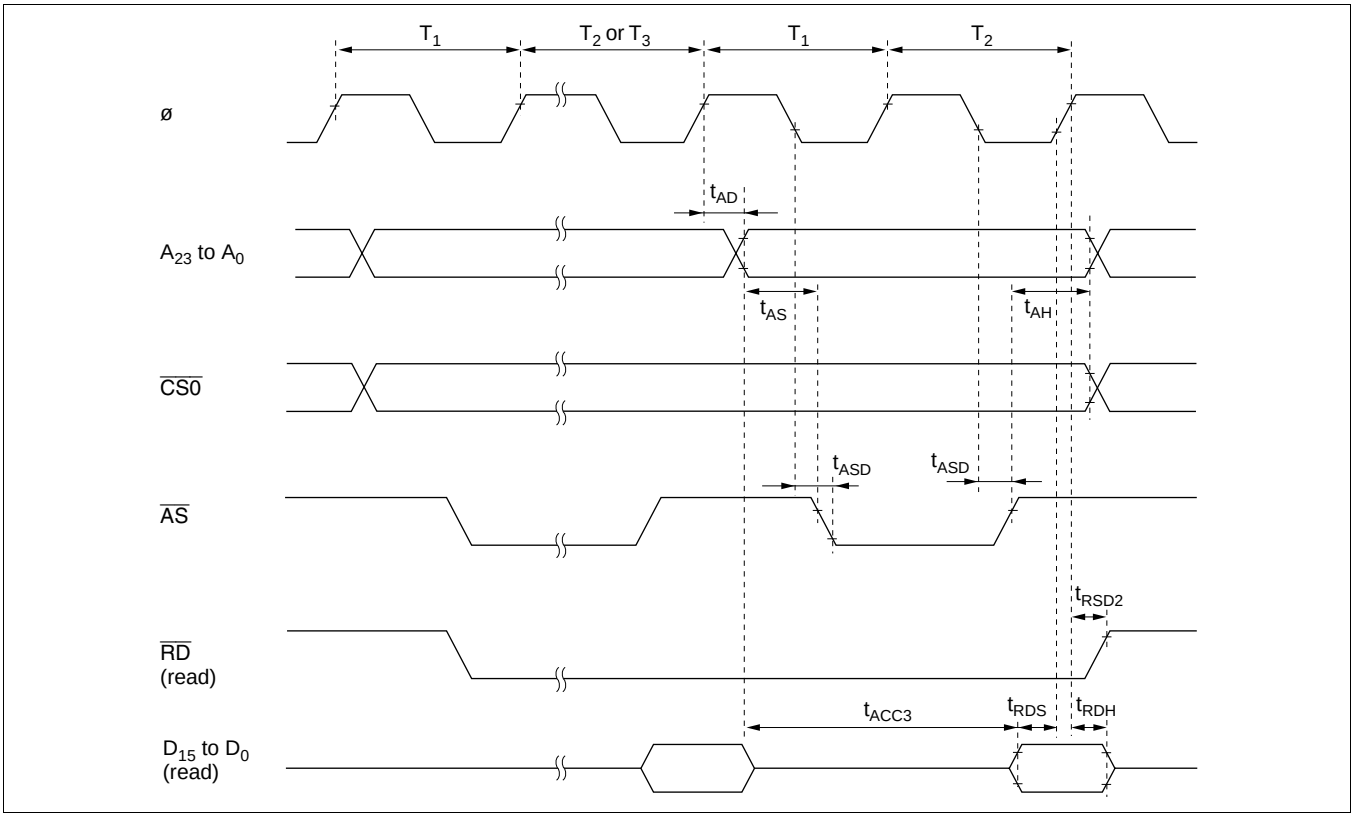

Figure 22-46 Burst ROM Access Timing (Two-State Access)

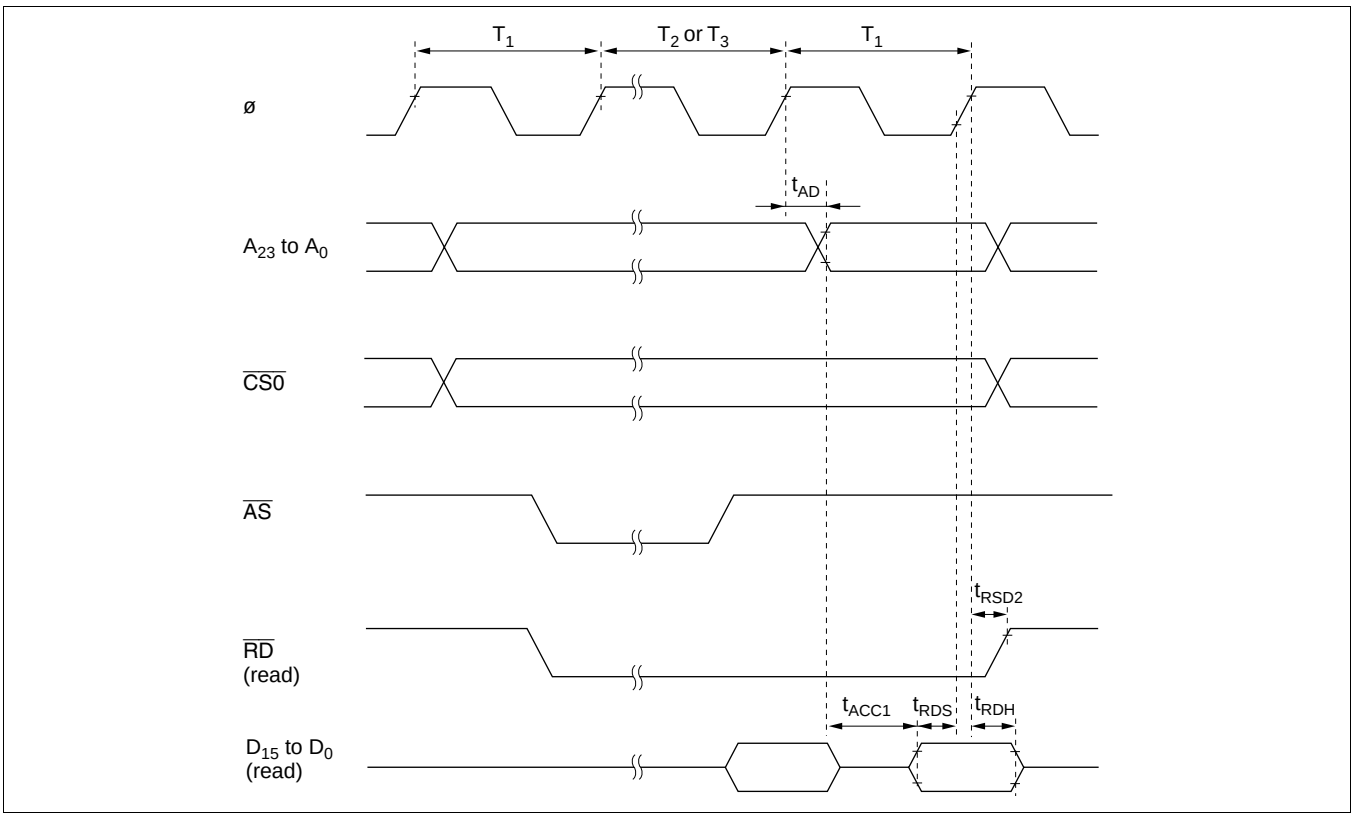

Figure 22-47 Burst ROM Access Timing (One-State Access)

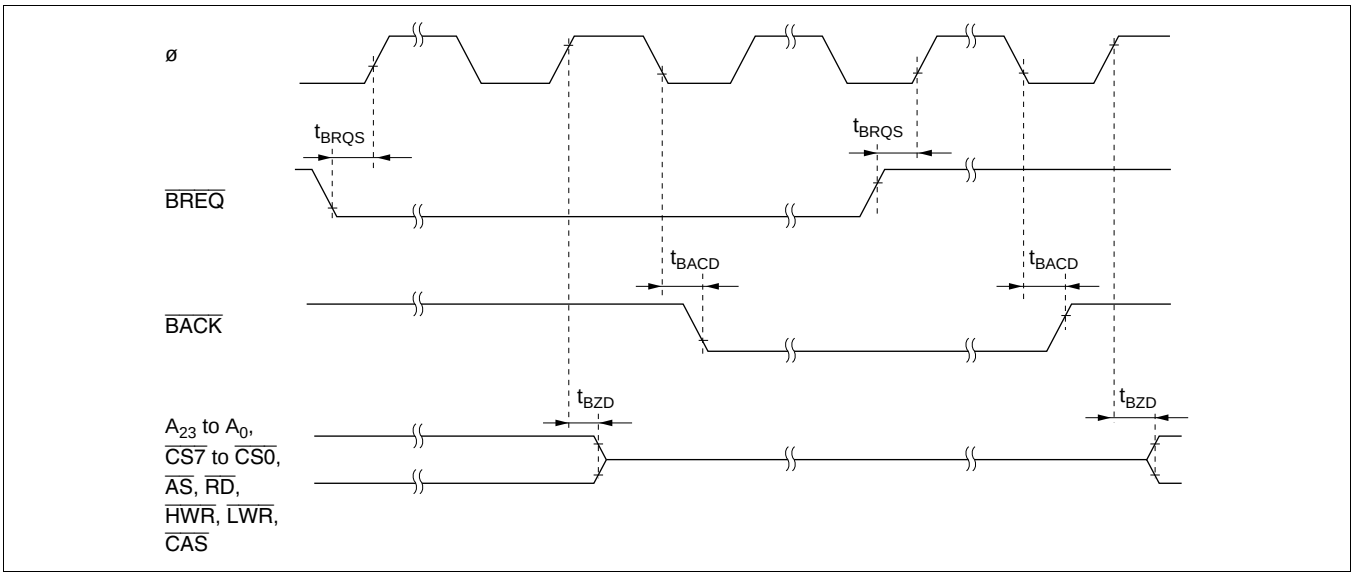

Figure 22-48 External Bus Release Timing

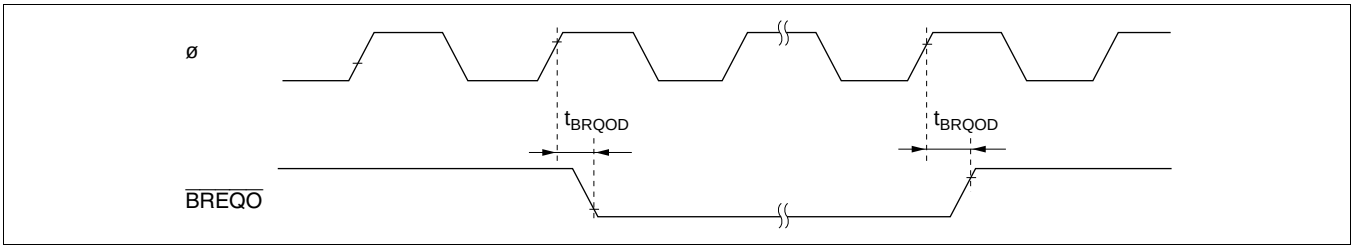

Figure 22-49 External Bus Request Output Timing

(4) DMAC Timing

Table 22-17 lists the DMAC timing.

Table 22-17 DMAC Timing

Conditions: V_{CC} = 5.0 V ± 10%, AV_{CC} = 5.0 V ± 10%, V_{ref} = 4.5 V to AV_{CC},
V_{SS} = AV_{SS} = 0 V, ø = 10 to 20 MHz, T_a = –20 to +75°C (regular specifications),
T_a = –40 to +85°C (wide-range specifications)

Item	Symbol	Condition Min	Condition Max	Unit	Test Conditions
$\overline{\text{DREQ}}$ setup time	t_{DRQS}	30	—	ns	Figure 22-53
$\overline{\text{DREQ}}$ hold time	t_{DRQH}	10	—		
$\overline{\text{TEND}}$ delay time	t_{TED}	—	20		Figure 22-52
$\overline{\text{DACK}}$ delay time 1	t_{DACD1}	—	20	ns	Figure 22-50, Figure 22-51
$\overline{\text{DACK}}$ delay time 2	t_{DACD2}	—	20		

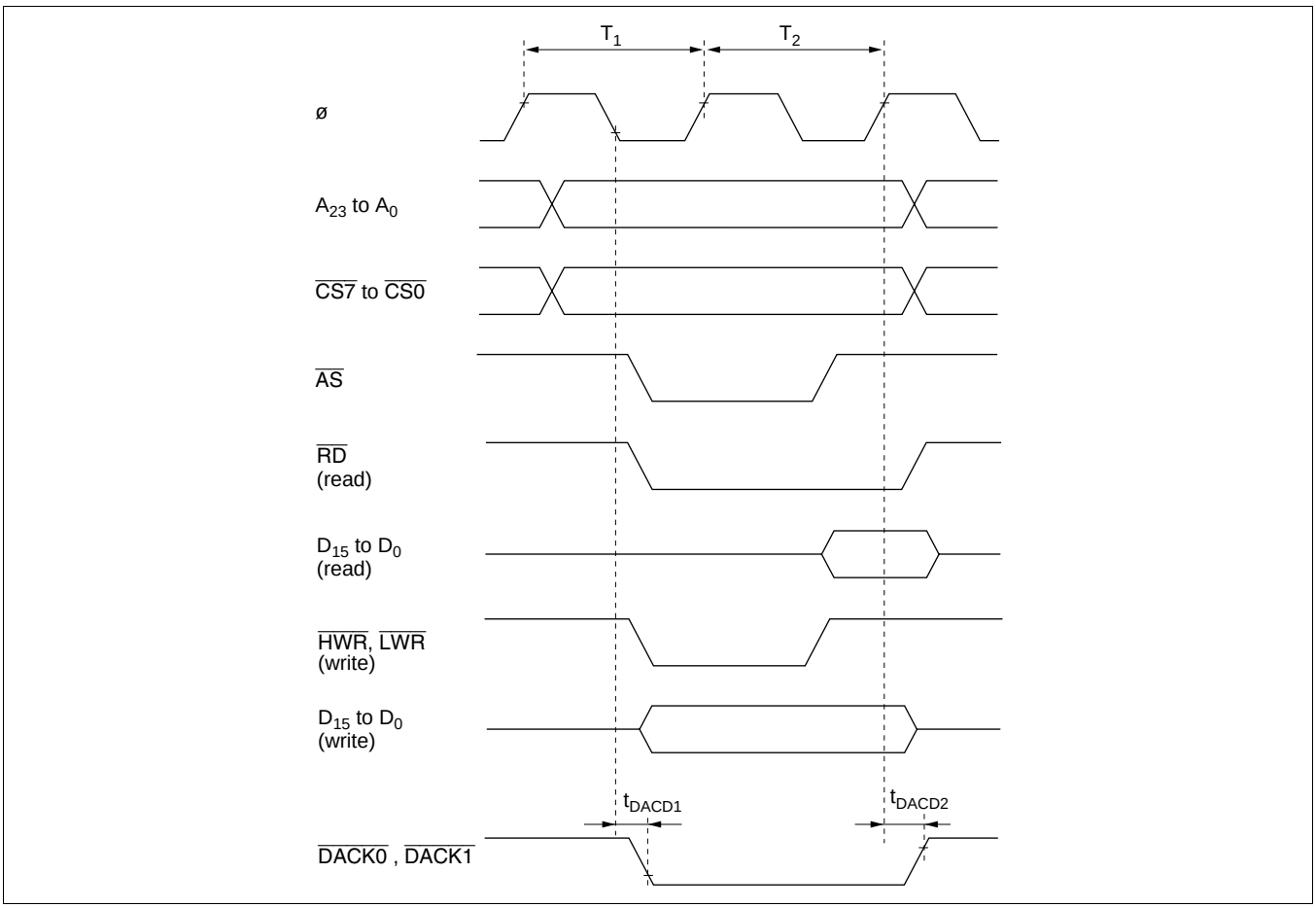

Figure 22-50 DMAC Single Address Transfer Timing (Two-State Access)

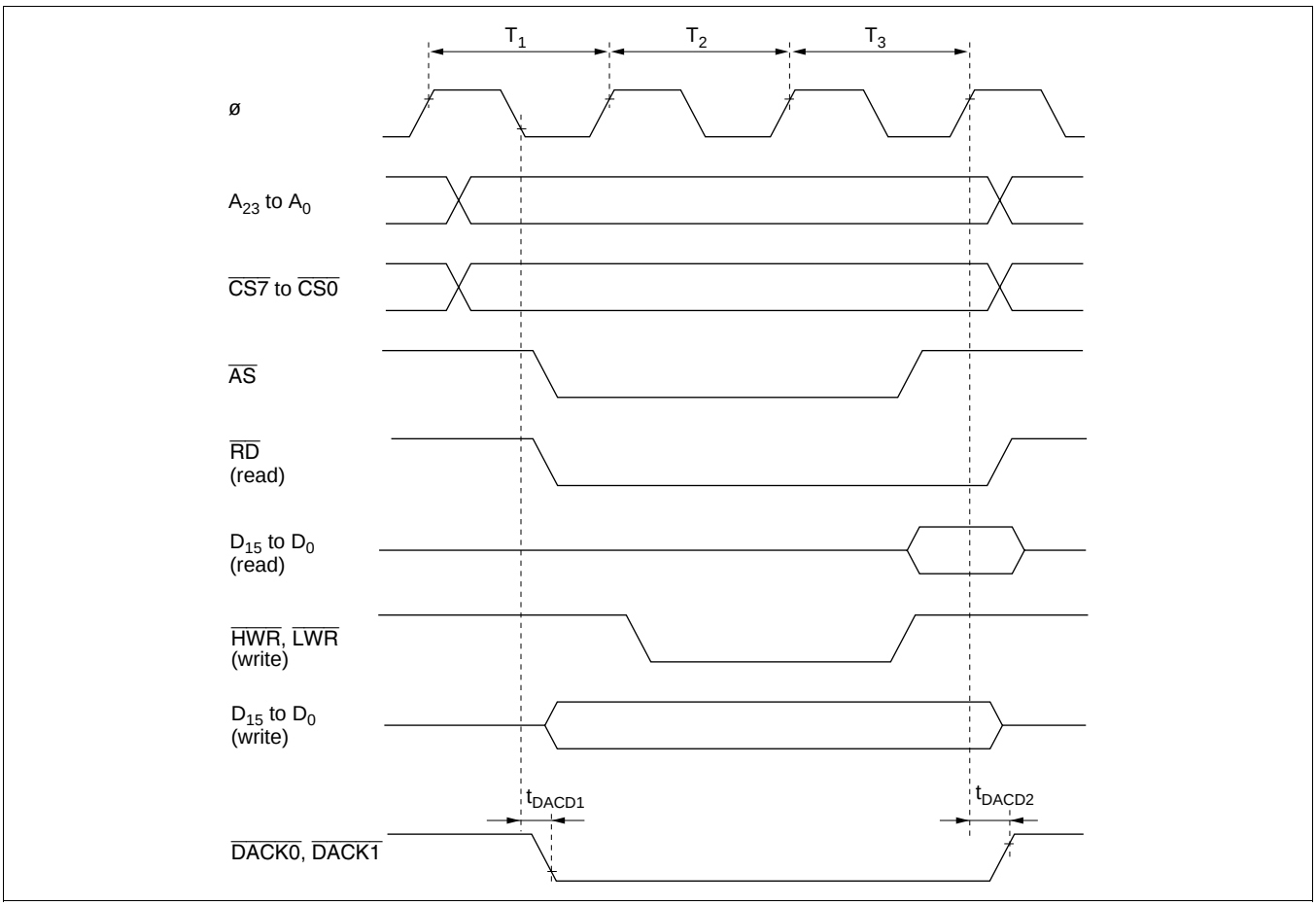

Figure 22-51 DMAC Single Address Transfer Timing (Three-State Access)

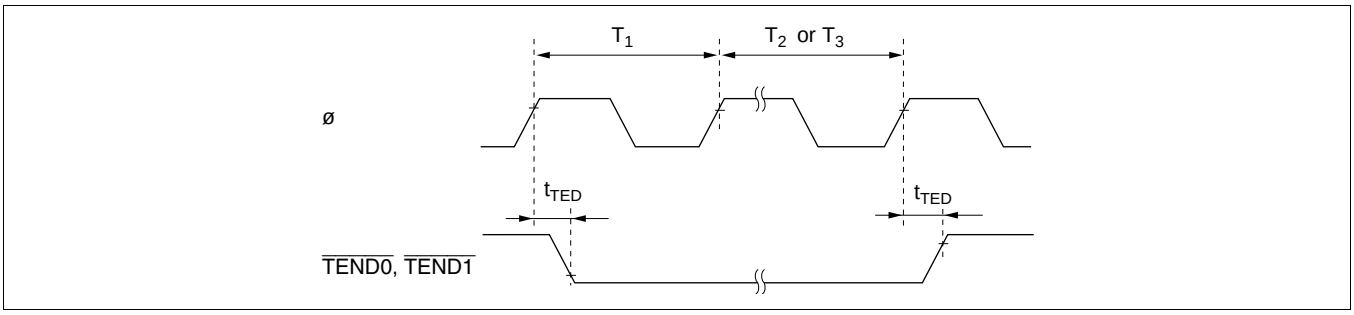

Figure 22-52 DMAC TEND Output Timing

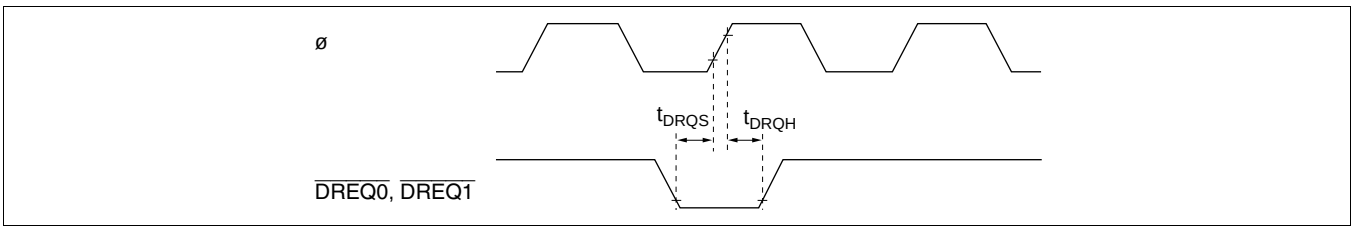

Figure 22-53 DMAC DREQ Intput Timing

(5) Timing of On-Chip Supporting Modules

Table 22-18 lists the timing of on-chip supporting modules.

Table 22-18 Timing of On-Chip Supporting Modules

Conditions: V_{CC} = 5.0 V ± 10%, AV_{CC} = 5.0 V ± 10%, V_{ref} = 4.5 V to AV_{CC},
V_{SS} = AV_{SS} = 0 V, ø = 10 to 20 MHz, T_a = –20 to +75°C (regular specifications),
T_a = –40 to +85°C (wide-range specifications)

Item			Symbol	Condition Min	Condition Max	Unit	Test Conditions
PORT	Output data delay time		t_{PWD}	—	50	ns	Figure 22-54
	Input data setup time		t_{PRS}	30	—		
	Input data hold time		t_{PRH}	30	—		
PPG	Pulse output delay time		t_{POD}	—	50	ns	Figure 22-55
TPU	Timer output delay time		t_{TOCD}	—	50	ns	Figure 22-56
	Timer input setup time		t_{TICS}	30	—		
	Timer clock input setup time		t_{TCKS}	30	—	ns	Figure 22-57
	Timer clock pulse width	Single edge	t_{TCKWH}	1.5	—	t_{cyc}	
		Both edges	t_{TCKWL}	2.5	—		
TMR	Timer output delay time		t_{TMOD}	—	50	ns	Figure 22-58
	Timer reset input setup time		t_{TMRS}	30	—	ns	Figure 22-60
	Timer clock input setup time		t_{TMCS}	30	—	ns	Figure 22-59
	Timer clock pulse width	Single edge	t_{TMCWH}	1.5	—	t_{cyc}	
		Both edges	t_{TMCWL}	2.5	—		
SCI	Input clock cycle	Asynchro-nous	t_{Scyc}	4	—	t_{cyc}	Figure 22-61
		Synchro-nous		6	—		
	Input clock pulse width		t_{SCKW}	0.4	0.6	t_{Scyc}	
	Input clock rise time		t_{SCKr}	—	1.5	t_{cyc}	
	Input clock fall time		t_{SCKf}	—	1.5		
	Transmit data delay time		t_{TXD}	—	50	ns	Figure 22-62
	Receive data setup time (synchronous)		t_{RXS}	50	—	ns	
	Receive data hold time (synchronous)		t_{RXH}	50	—	ns	
A/D con-verter	Trigger input setup time		t_{TRGS}	30	—	ns	Figure 22-63

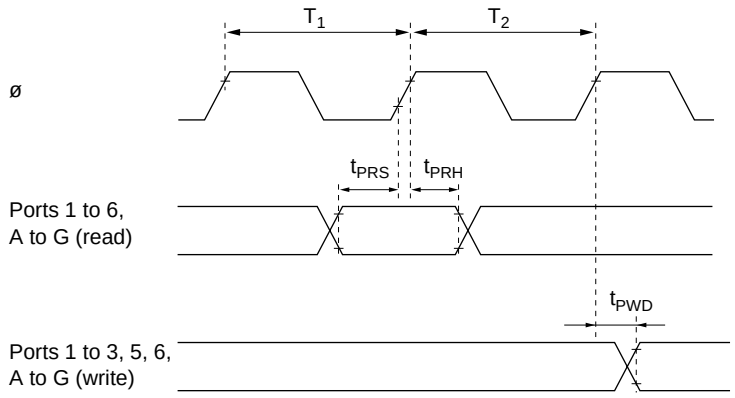

Figure 22-54 I/O Port Input/Output Timing

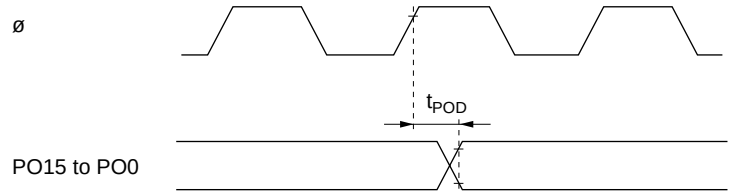

Figure 22-55 PPG Output Timing

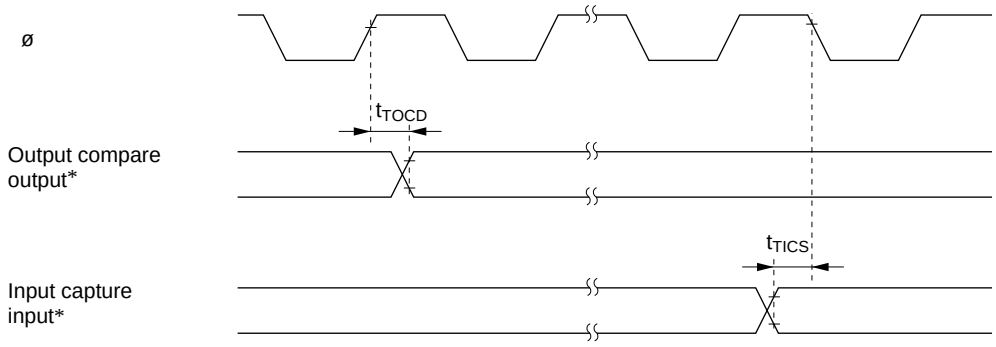

Note: * TIOCA0 to TIOCA5, TIOCB0 to TIOCB5, TIOCC0, TIOCC3, TIOCD0, TIOCD3

Figure 22-56 TPU Input/Output Timing

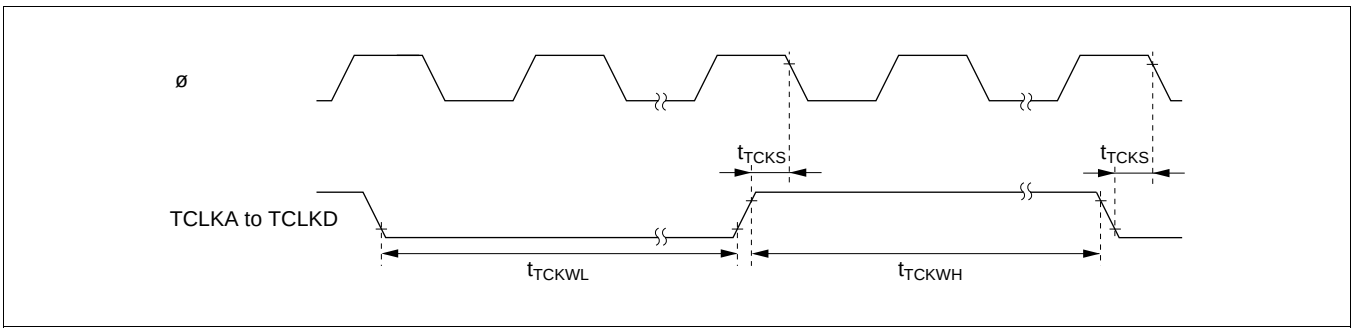

Figure 22-57 TPU Clock Input Timing

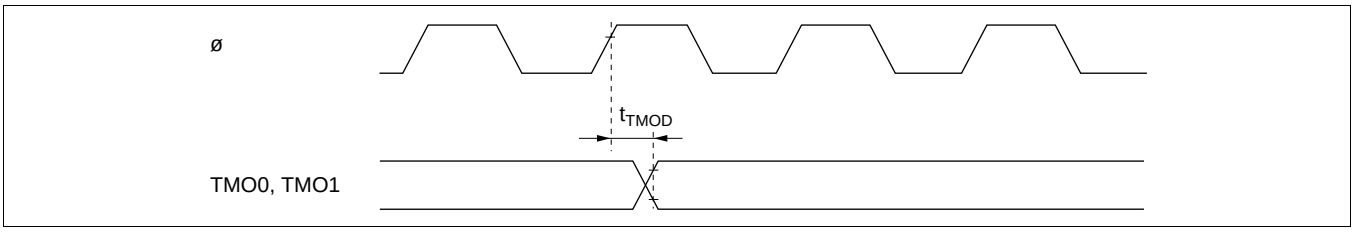

Figure 22-58 8-Bit Timer Output Timing

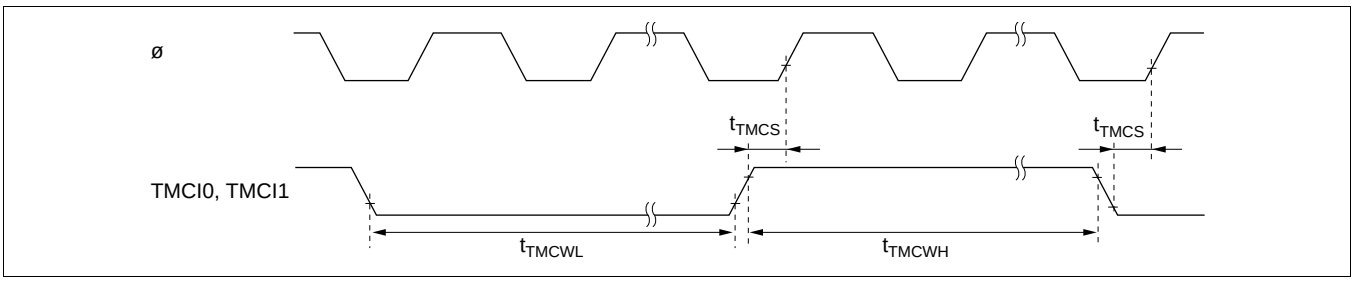

Figure 22-59 8-Bit Timer Clock Input Timing

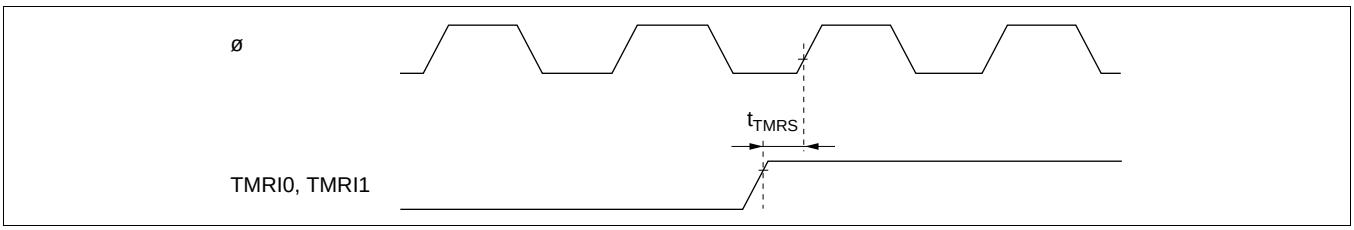

Figure 22-60 8-Bit Timer Reset Input Timing

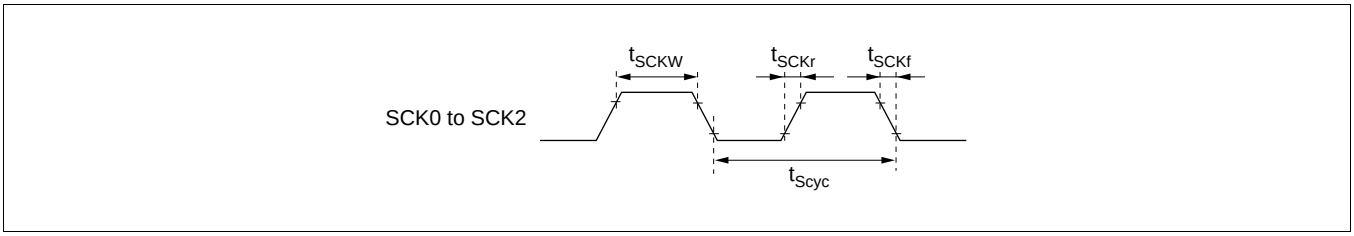

Figure 22-61 SCK Clock Input Timing

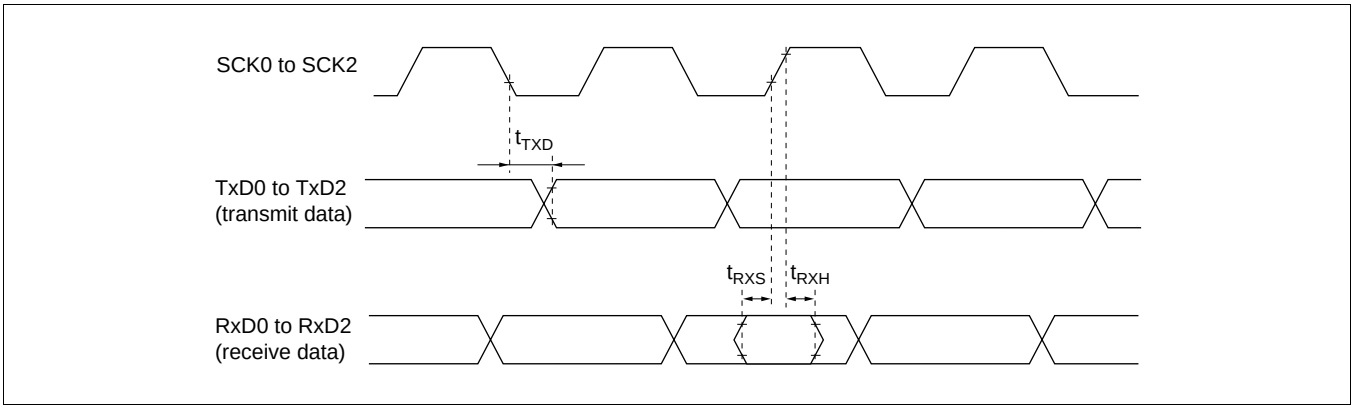

Figure 22-62 SCI Input/Output Timing (Clock Synchronous Mode)

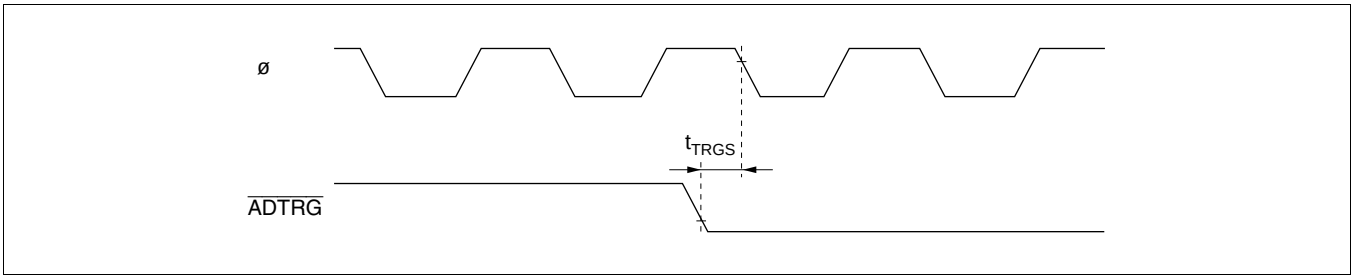

Figure 22-63 A/D Converter External Trigger Input Timing

22.3.4 A/D Conversion Characteristics

Table 22-19 lists the A/D conversion characteristics.

Table 22-19 A/D Conversion Characteristics

Conditions: $V_{CC} = AV_{CC} = 5.0$ V ± 10%, $V_{ref} = 4.5$ V to AV_{CC}, $V_{SS} = AV_{SS} = 0$ V,
ϕ = 10 to 20 MHz, T_a = –20 to +75°C (regular specifications),
T_a = –40 to +85°C (wide-range specifications)

Item	Min	Typ	Max	Unit
Resolution	10	10	10	bits
Conversion time	6.7	—	—	µs
Analog input capacitance	—	—	20	pF
Permissible signal-source impedance	—	—	10*[1]	kΩ
	—	—	5*[2]	
Nonlinearity error	—	—	±3.5	LSB
Offset error	—	—	±3.5	LSB
Full-scale error	—	—	±3.5	LSB
Quantization error	—	—	±0.5	LSB
Absolute accuracy	—	—	±4.0	LSB

Notes: 1. $\phi \leq 12$ MHz
2. $\phi > 12$ MHz

22.3.5 D/A Conversion Characteristics

Table 22-20 lists the D/A conversion characteristics.

Table 22-20 D/A Conversion Characteristics

Conditions: $V_{CC} = AV_{CC} = 5.0$ V ± 10%, $V_{ref} = 4.5$ V to AV_{CC}, $V_{SS} = AV_{SS} = 0$ V,
ϕ = 10 to 20 MHz, T_a = –20 to +75°C (regular specifications),
T_a = –40 to +85°C (wide-range specifications)

Item	Min	Typ	Max	Unit	Test Conditions
Resolution	8	8	8	bits	
Conversion time	—	—	10	µs	20-pF capacitive load
Absolute accuracy	—	±1.0	±1.5	LSB	2-MΩ resistive load
	—	—	±1.0	LSB	4-MΩ resistive load

22.3.6 Flash Memory Characteristics

Table 22-21 Flash Memory Characteristics (HD64F2398F20, HD64F2398TE20)

Conditions: $V_{CC} = 5.0$ V ± 10%, $AV_{CC} = 5.0$ V ± 10%, $V_{ref} = 4.5$ V to AV_{CC}, $V_{SS} = AV_{SS} = 0$V
T_a = 0 to +75°C (Programming/erasing operating temperature, regular specifications), T_a = 0 to + 85°C (Programming/erasing operating temperature, wide-range specifications)

Item		Symbol		Min	Typ	Max	Unit	Test Condition
Programming time*1*2*4		t_P		—	10	200	ms/128 bytes	
Erase time*1*3*6		t_E		—	50	1000	ms/block	
Reprogramming count		N_{WEC}		—	—	100	Times	
Programming	Wait time after SWE bit setting*1	x		1	—	—	µs	
	Wait time after PSU bit setting*1	y		50	—	—	µs	
	Wait time after P bit setting*1*4	z	(z1)	—	—	30	µs	1 ≤ n ≤ 6
			(z2)	—	—	200	µs	7 ≤ n ≤ 1000
			(z3)	—	—	10	µs	Additional program-ming wait
	Wait time after P bit clear*1	α		5	—	—	µs	
	Wait time after PSU bit clear*1	β		5	—	—	µs	
	Wait time after PV bit setting*1	γ		4	—	—	µs	
	Wait time after H'FF dummy write*1	ε		2	—	—	µs	
	Wait time after PV bit clear*1	η		2	—	—	µs	

Item		Symbol	Min	Typ	Max	Unit	Test Condition
Programming	Wait time after SWE bit clear*[1]	θ	100	—	—	μs	
	Maximum programming count*[1]*[4]	N	—	—	1000*[5]	Times	
Erase	Wait time after SWE bit setting*[1]	x	1	—	—	μs	
	Wait time after ESU bit setting*[1]	y	100	—	—	μs	
	Wait time after E bit setting*[1]*[6]	z	—	—	10	ms	Erase time wait
	Wait time after E bit clear*[1]	α	10	—	—	μs	
	Wait time after ESU bit clear*[1]	β	10	—	—	μs	
	Wait time after EV bit setting*[1]	γ	20	—	—	μs	
	Wait time after H'FF dummy write*[1]	ε	2	—	—	μs	
	Wait time after EV bit clear*[1]	η	4	—	—	μs	
	Wait time after SWE bit clear*[1]	θ	100	—	—	μs	
	Maximum erase count*[1]*[6]	N	—	—	100	Times	

Notes:
1. Settings of each time must comply with algorithm of writing/erasing.
2. Writing time for 128 bytes: indicates the total period in which bit P of flash memory control register 1 (FLMCR1) is set. Writing verification time is not included.
3. Erasing time for one block: indicates the period in which bit E of FLMCR1 is set. Erasing verification time is not included.
4. Maximum writing time: $t_P(max) = \Sigma$ wait time (z) after setting of bit P
5. The maximum writing count (N) must be set to the maximum writing time ($t_P(max)$) or less according the actual set value (z). Wait time (z) must be switched after setting of bit P according to writing count (n).

   Writing count n

   $1 \leq n \leq 6$ z = 30 μs

   $7 \leq n \leq 1000$ z = 200 μs

   [In additional writing]

   Writing count n

   $1 \leq n \leq 6$ z = 10 μs
6. Wait time (z) after setting of bit E and the maximum erasing count (N) have the following relationship to the maximum erasing time ($t_E(max)$).

   $t_E(max)$ = wait time (z) after setting of bit E × maximum erasing count (N)

Table 22-22 Flash Memory Characteristics (HD64F2398F20T, HD64F2398TE20T)

Conditions: V_{CC} = 5.0 V ± 10%, AV_{CC} = 5.0 V ± 10%, V_{ref} = 4.5 V to AV_{CC}, V_{SS} = AV_{SS} = 0V
T_a = 0 to +75°C (Programming/erasing operating temperature, regular specifications), T_a = 0 to + 85°C (Programming/erasing operating temperature, wide-range specifications)

Item		Symbol	Min	Typ	Max	Unit	Test Condition
Programming time*1*2*4		t_P	—	10	200	ms/128 bytes	
Erase time*1*3*6		t_E	—	50	1000	ms/block	
Reprogramming count		N_{WEC}	—	—	1000	Times	
Programming	Wait time after SWE bit setting*1	x	1	—	—	µs	
	Wait time after PSU bit setting*1	y	50	—	—	µs	
	Wait time after P bit setting*1*4	z (z1)	—	—	30	µ	s1 ≤ n ≤ 6
		(z2)	—	—	200	µs	7 ≤ n ≤ 1000
		(z3)	—	—	10	µs	Additional program-ming wait
	Wait time after P bit clear*1	α	5	—	—	µs	
	Wait time after PSU bit clear*1	β	5	—	—	µs	
	Wait time after PV bit setting*1	γ	4	—	—	µs	
	Wait time after H'FF dummy write*1	ε	2	—	—	µs	
	Wait time after PV bit clear*1	η	2	—	—	µs	
	Wait time after SWE bit clear*1	θ	100	—	—	µs	
	Maximum programming count*1*4	N	—	—	1000*5	Times	
Erase	Wait time after SWE bit setting*1	x	1	—	—	µs	
	Wait time after ESU bit setting*1	y	100	—	—	µs	
	Wait time after E bit setting*1*6	z	—	—	10	ms	Erase time wait
	Wait time after E bit clear*1	α	10	—	—	µs	
	Wait time after ESU bit clear*1	β	10	—	—	µs	
	Wait time after EV bit setting*1	γ	20	—	—	µs	
	Wait time after H'FF dummy write*1	ε	2	—	—	µs	
	Wait time after EV bit clear*1	η	4	—	—	µs	
	Wait time after SWE bit clear*1	θ	100	—	—	µs	
	Maximum erase count*1*6	N	—	—	100	Times	

Notes: 1. Settings of each time must comply with algorithm of writing/erasing.
2. Writing time for 128 bytes: indicates the total period in which bit P of flash memory control register 1 (FLMCR1) is set. Writing verification time is not included.
3. Erasing time for one block: indicates the period in which bit E of FLMCR1 is set. Erasing verification time is not included.
4. Maximum writing time: t_P(max) = Σ wait time (z) after setting of bit P

5. The maximum writing count (N) must be set to the maximum writing time (t_P(max)) or less according the actual set value (z). Wait time (z) must be switched after setting of bit P according to writing count (n).

   Writing count n

   $1 \leq n \leq 6$ z = 30 μs

   $7 \leq n \leq 1000$ z = 200 μs

   [In additional writing]

   Writing count n

   $1 \leq n \leq 6$ z = 10 μs
6. Wait time (z) after setting of bit E and the maximum erasing count (N) have the following relationship to the maximum erasing time (t_E(max)).

   t_E(max) = wait time (z) after setting of bit E × maximum erasing count (N)

22.4 Notes on Use

The F-ZTAT and masked ROM versions satisfy electrical characteristics described in this manual. However, actual electrical characteristics values, operation margins, and noise margins depend on differences in manufacturing processes, on-chip ROM, or layout patterns.

If the system is evaluated using the F-ZTAT version, perform the same evaluation test of the system using the masked ROM version when switching to the masked ROM version.

22.5 Usage Note (Internal Voltage Step Down for the H8S/2398 F-ZTAT)

The H8S/2398 F-ZTAT have a voltage step down circuit that automatically lowers the power supply voltage, inside the microcomputer, to an adequate level. A capacitor (one 0.47-μF capacitor or two 0.47-μF capacitors connected in parallel) should be connected between the V_{CL} pin (a pin for internal voltage step down circuit) and V_{SS} pin to stabilize the internal voltage. Figure 22-64 shows how to connect the capacitor. Do not connect the V_{CC} power-supply to the V_{CL} pin. Doing so could permanently damage the LSI. (Connect the V_{CC} power-supply to the V_{CC} pin, in the usual way.)

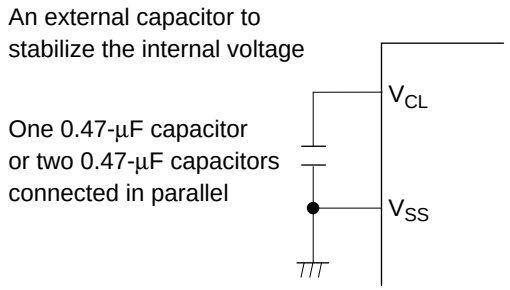

Do not connect the V_{CC} power-supply to the V_{CL} pin.
If connected, the LSI may be permanently damaged.
Connect the V_{CC} power-supply to the other V_{CC} pin in the usual way.
Use a multilayer ceramic capacitor (one 0.47-μF capacitor or two 0.47-μF capacitors connected in parallel) for this circuit, and place it/them near the V_{CL} pin.

Figure 22-64 V_{CL} Capacitor Connection Method

22.6 Electrical Characteristics of H8S/2357 Masked ROM and ZTAT Versions, and H8S/2352

22.6.1 Absolute Maximum Ratings

Table 22-23 lists the absolute maximum ratings.

Table 22-23 Absolute Maximum Ratings

Item	Symbol	Value	Unit
Power supply voltage	V_{CC}	–0.3 to +7.0	V
Programming voltage*	V_{PP}	–0.3 to +13.5	V
Input voltage (except port 4)	V_{in}	–0.3 to V_{CC} +0.3	V
Input voltage (port 4)	V_{in}	–0.3 to AV_{CC} +0.3	V
Reference voltage	V_{ref}	–0.3 to AV_{CC} +0.3	V
Analog power supply voltage	AV_{CC}	–0.3 to +7.0	V
Analog input voltage	V_{AN}	–0.3 to AV_{CC} +0.3	V
Operating temperature	T_{opr}	Regular specifications: –20 to +75	°C
		Wide-range specifications: –40 to +85	°C
Storage temperature	T_{stg}	–55 to +125	°C

Caution: Permanent damage to the chip may result if absolute maximum rating are exceeded.
Note: * ZTAT version only

22.6.2 DC Characteristics

Table 22-24 lists the DC characteristics. Table 22-25 lists the permissible output currents.

Table 22-24 DC Characteristics (1)

Conditions: V_{CC} = 5.0 V ± 10%, AV_{CC} = 5.0 V ± 10%, V_{ref} = 4.5 V to AV_{CC}, V_{SS} = AV_{SS} = 0 V*[1], T_a = –20 to +75°C (regular specifications), T_a = –40 to +85°C (wide-range specifications)

Item		Symbol	Min	Typ	Max	Unit	Test Conditions
Schmitt trigger input voltage	Port 2, $P6_4$ to $P6_7$, PA_4 to PA_7	V_T^-	1.0	—	—	V	
		V_T^+	—	—	$V_{CC} \times 0.7$	V	
		$V_T^+ - V_T^-$	0.4	—	—	V	
Input high voltage	$\overline{RES}$, $\overline{STBY}$, NMI, MD_2 to MD_0	V_{IH}	V_{CC} – 0.7	—	V_{CC} + 0.3	V	
	EXTAL		$V_{CC} \times 0.7$	—	V_{CC} + 0.3	V	
	Ports 1, 3, 5, B to G, $P6_0$ to $P6_3$, PA_0 to PA_3		2.0	—	V_{CC} + 0.3	V	
	Port 4		2.0	—	AV_{CC} + 0.3	V	

Item		Symbol	Min	Typ	Max	Unit	Test Conditions
Input low voltage	$\overline{RES}$, $\overline{STBY}$, MD_2 to MD_0	V_{IL}	–0.3	—	0.5	V	
	NMI, EXTAL, Ports 1, 3 to 5, B to G, $P6_0$ to $P6_3$, PA_0 to PA_3		–0.3	—	0.8	V	
Output high voltage	All output pins	V_{OH}	V_{CC} – 0.5	—	—	V	I_{OH} = –200 μA
			3.5	—	—	V	I_{OH} = –1 mA
Output low voltage	All output pins	V_{OL}	—	—	0.4	V	I_{OL} = 1.6 mA
	Ports 1, A to C		—	—	1.0	V	I_{OL} = 10 mA
Input leakage current	$\overline{RES}$	$\lvert I_{in} \rvert$	—	—	10.0	μA	V_{in} = 0.5 V to V_{CC} – 0.5 V
	$\overline{STBY}$, NMI, MD_2 to MD_0		—	—	1.0	μA	
	Port 4		—	—	1.0	μA	V_{in} = 0.5 V to AV_{CC} – 0.5 V
Three-state leakage current (off state)	Ports 1 to 3, 5, 6, A to G	$\lvert I_{TSI} \rvert$	—	—	1.0	μA	V_{in} = 0.5 V to V_{CC} – 0.5 V
MOS input pull-up current	Ports A to E	$-I_P$	50	—	300	μA	V_{in} = 0 V
Input capacitance	$\overline{RES}$	C_{in}	—	—	80	pF	V_{in} = 0 V f = 1 MHz T_a = 25°C
	NMI		—	—	50	pF	
	All input pins except $\overline{RES}$ and NMI		—	—	15	pF	
Current dissipation*2	Normal operation	I_{CC}*4	—	78 (5.0 V)	122	mA	f = 20 MHz
	Sleep mode		—	53 (5.0 V)	84	mA	f = 20 MHz
	Standby mode*3		—	0.01	5.0	μA	$T_a \leq$ 50°C
			—	—	20.0		50°C < T_a
Analog power supply current	During A/D and D/A conversion	AI_{CC}	—	0.8 (5.0 V)	2.0	mA	
	Idle		—	0.01	5.0	μA	
Reference current	During A/D and D/A conversion	AI_{CC}	—	2.3 (5.0 V)	3.0	mA	
	Idle		—	0.01	5.0	μA	
RAM standby voltage		V_{RAM}	2.0	—	—	V	

Notes: 1. If the A/D and D/A converters are not used, do not leave the AV_{CC}, AV_{SS}, and V_{ref} pins open. Connect AV_{CC} and V_{ref} to V_{CC}, and connect AV_{SS} to V_{SS}.

2. Current dissipation values are for V_{IH} min = V_{CC} –0.5 V and V_{IL} max = 0.5 V with all output pins unloaded and the on-chip pull-up transistors in the off state.

3. The values are for $V_{RAM} \leq V_{CC}$ < 4.5 V, V_{IH} min = $V_{CC} \times 0.9$, and V_{IL} max = 0.3 V.

4. I_{CC} depends on V_{CC} and f as follows:
I_{CC} max = 1.0 (mA) + 1.1 (mA/(MHz × V)) × V_{CC} × f [normal mode]
I_{CC} max = 1.0 (mA) + 0.75 (mA/(MHz × V)) × V_{CC} × f [sleep mode]

Table 22-24 DC Characteristics (2)

Conditions: V_{CC} = 2.7 to 5.5 V, AV_{CC} = 2.7 to 5.5 V, V_{ref} = 2.7 V to AV_{CC}, V_{SS} = AV_{SS} = 0 V*[1],
T_a = –20 to +75°C (regular specifications), T_a = –40 to +85°C (wide-range specifications)

Item		Symbol	Min	Typ	Max	Unit	Test Conditions
Schmitt trigger input voltage	Port 2, $P6_4$ to $P6_7$, PA_4 to PA_7	V_T^-	$V_{CC} \times 0.2$	—	—	V	
		V_T^+	—	—	$V_{CC} \times 0.7$	V	
		$V_T^+ - V_T^-$	$V_{CC} \times 0.07$	—	—	V	
Input high voltage	$\overline{RES}$, $\overline{STBY}$, NMI, MD_2 to MD_0	V_{IH}	$V_{CC} \times 0.9$	—	V_{CC} +0.3	V	
	EXTAL		$V_{CC} \times 0.7$	—	V_{CC} +0.3	V	
	Ports 1, 3, 5, B to G, $P6_0$ to $P6_3$, PA_0 to PA_3		$V_{CC} \times 0.7$	—	V_{CC} +0.3	V	
	Port 4		$V_{CC} \times 0.7$	—	AV_{CC} +0.3	V	
Input low voltage	$\overline{RES}$, $\overline{STBY}$, MD_2 to MD_0	V_{IL}	–0.3	—	$V_{CC} \times 0.1$	V	
	NMI, EXTAL, Ports 1, 3 to 5, B to G, $P6_0$ to $P6_3$, PA_0 to PA_3		–0.3	—	$V_{CC} \times 0.2$	V	V_{CC} < 4.0 V
					0.8		V_{CC} = 4.0 to 5.5 V
Output high voltage	All output pins	V_{OH}	V_{CC} – 0.5	—	—	V	I_{OH} = –200 µA
			V_{CC} – 1.0	—	—	V	I_{OH} = –1 mA
Output low voltage	All output pins	V_{OL}	—	—	0.4	V	I_{OL} = 1.6 mA
	Ports 1, A to C		—	—	1.0	V	$V_{CC} \leq 4.0$ V I_{OL} = 5 mA 4.0 < $V_{CC} \leq 5.5$ V I_{OL} = 10 mA
Input leakage current	$\overline{RES}$	$\lvert I_{in} \rvert$	—	—	10.0	µA	V_{in} = 0.5 V to V_{CC} – 0.5 V
	$\overline{STBY}$, NMI, MD_2 to MD_0		—	—	1.0	µA	
	Port 4		—	—	1.0	µA	V_{in} = 0.5 V to AV_{CC} – 0.5 V
Three-state leakage current (off state)	Ports 1 to 3, 5, 6, A to G	$\lvert I_{TSI} \rvert$	—	—	1.0	µA	V_{in} = 0.5 V to V_{CC} –0.5 V
MOS input pull-up current	Ports A to E	$-I_P$	10	—	300	µA	V_{CC} = 2.7 to 5.5 V, V_{in} = 0 V
Input capacitance	$\overline{RES}$	C_{in}	—	—	80	pF	V_{in} = 0 V f = 1 MHz T_a = 25°C
	NMI		—	—	50	pF	
	All input pins except $\overline{RES}$ and NMI		—	—	15	pF	

Item		Symbol	Min	Typ	Max	Unit	Test Conditions
Current dissipation*2	Normal operation	I_{CC}*4	—	23 (3.0 V)	62	mA	f = 10 MHz
	Sleep mode		—	16 (3.0 V)	42	mA	f = 10 MHz
	Standby mode*3		—	0.01	5.0	µA	$T_a \leq 50°C$
			—	—	20.0		$50°C < T_a$
Analog power supply current	During A/D and D/A conversion	AI_{CC}	—	0.2 (3.0 V)	2.0	mA	
	Idle		—	0.01	5.0	µA	
Reference current	During A/D and D/A conversion	AI_{CC}	—	1.4 (3.0 V)	3.0	mA	
	Idle		—	0.01	5.0	µA	
RAM standby voltage		V_{RAM}	2.0	—	—	V	

Notes: 1. If the A/D and D/A converters are not used, do not leave the AV_{CC}, AV_{SS}, and V_{ref} pins open. Connect AV_{CC} and V_{ref} to V_{CC}, and connect AV_{SS} to V_{SS}.
2. Current dissipation values are for V_{IH} min = V_{CC} –0.5 V and V_{IL} max = 0.5 V with all output pins unloaded and the on-chip pull-up transistors in the off state.
3. The values are for $V_{RAM} \leq V_{CC} < 2.7$ V, V_{IH} min = $V_{CC} \times 0.9$, and V_{IL} max = 0.3 V.
4. I_{CC} depends on V_{CC} and f as follows:
I_{CC} max = 1.0 (mA) + 1.1 (mA/(MHz × V)) × V_{CC} × f [normal mode]
I_{CC} max = 1.0 (mA) + 0.75 (mA/(MHz × V)) × V_{CC} × f [sleep mode]

Table 22-24 DC Characteristics (3)

Conditions: V_{CC} = 3.0 to 5.5 V, AV_{CC} = 3.0 to 5.5 V, V_{ref} = 3.0 V to AV_{CC}, V_{SS} = AV_{SS} = 0 V*1,
T_a = –20 to +75°C (regular specifications), T_a = –40 to +85°C (wide-range specifications)

Item		Symbol	Min	Typ	Max	Unit	Test Conditions
Schmitt trigger input voltage	Port 2, $P6_4$ to $P6_7$, PA_4 to PA_7	V_T^-	$V_{CC} \times 0.2$	—	—	V	
		V_T^+	—	—	$V_{CC} \times 0.7$	V	
		$V_T^+ - V_T^-$	$V_{CC} \times 0.07$	—	—	V	
Input high voltage	$\overline{RES}$, $\overline{STBY}$, NMI, MD_2 to MD_0	V_{IH}	$V_{CC} \times 0.9$	—	V_{CC} +0.3	V	
	EXTAL		$V_{CC} \times 0.7$	—	V_{CC} +0.3	V	
	Ports 1, 3, 5, B to G, $P6_0$ to $P6_3$, PA_0 to PA_3		$V_{CC} \times 0.7$	—	V_{CC} +0.3	V	
	Port 4		$V_{CC} \times 0.7$	—	AV_{CC} +0.3	V	
Input low voltage	$\overline{RES}$, $\overline{STBY}$, MD_2 to MD_0	V_{IL}	–0.3	—	$V_{CC} \times 0.1$	V	
	NMI, EXTAL, Ports 1, 3 to 5, B to G, $P6_0$ to $P6_3$, PA_0 to PA_3		–0.3	—	$V_{CC} \times 0.2$	V	V_{CC} < 4.0 V
					0.8		V_{CC} = 4.0 to 5.5 V

Item		Symbol	Min	Typ	Max	Unit	Test Conditions
Output high voltage	All output pins	V_{OH}	V_{CC} – 0.5	—	—	V	I_{OH} = –200 µA
			V_{CC} – 1.0	—	—	V	I_{OH} = –1 mA
Output low voltage	All output pins	V_{OL}	—	—	0.4	V	I_{OL} = 1.6 mA
	Ports 1, A to C		—	—	1.0	V	$V_{CC} \leq 4.0$ V I_{OL} = 5 mA $4.0 < V_{CC} \leq 5.5$ V I_{OL} = 10 mA
Input leakage current	$\overline{RES}$	$\lvert I_{in} \rvert$	—	—	10.0	µA	V_{in} = 0.5 V to V_{CC} – 0.5 V
	$\overline{STBY}$, NMI, MD_2 to MD_0		—	—	1.0	µA	
	Port 4		—	—	1.0	µA	V_{in} = 0.5 V to AV_{CC} – 0.5 V
Three-state leakage current (off state)	Ports 1 to 3, 5, 6, A to G	$\lvert I_{TSI} \rvert$	—	—	1.0	µA	V_{in} = 0.5 V to V_{CC} –0.5 V
MOS input pull-up current	Ports A to E	$-I_P$	10	—	300	µA	V_{CC} = 3.0 to 5.5 V, V_{in} = 0 V
Input capacitance	$\overline{RES}$	C_{in}	—	—	80	pF	V_{in} = 0 V f = 1 MHz T_a = 25°C
	NMI		—	—	50	pF	
	All input pins except $\overline{RES}$ and NMI		—	—	15	pF	
Current dissipation*2	Normal operation	I_{CC}*4	—	32 (3.3 V)	80	mA	f = 13 MHz
	Sleep mode		—	22 (3.3 V)	55	mA	f = 13 MHz
	Standby mode*3		—	0.01	5.0	µA	$T_a \leq 50$°C
			—	—	20		50°C < T_a
Analog power supply current	During A/D and D/A conversion	AI_{CC}	—	0.3 (3.3 V)	2.0	mA	
	Idle		—	0.01	5.0	µA	
Reference current	During A/D and D/A conversion	AI_{CC}	—	1.6 (3.3 V)	3.0	mA	
	Idle		—	0.01	5.0	µA	
RAM standby voltage		V_{RAM}	2.0	—	—	V	

Notes: 1. If the A/D and D/A converters are not used, do not leave the AV_{CC}, AV_{SS}, and V_{ref} pins open. Connect AV_{CC} and V_{ref} to V_{CC}, and connect AV_{SS} to V_{SS}.

2. Current dissipation values are for V_{IH} min = V_{CC} –0.5 V and V_{IL} max = 0.5 V with all output pins unloaded and the on-chip pull-up transistors in the off state.

3. The values are for $V_{RAM} \leq V_{CC} < 3.0$ V, V_{IH} min = $V_{CC} \times 0.9$, and V_{IL} max = 0.3 V.

4. I_{CC} depends on V_{CC} and f as follows:
I_{CC} max = 1.0 (mA) + 1.1 (mA/(MHz × V)) × V_{CC} × f [normal mode]
I_{CC} max = 1.0 (mA) + 0.75 (mA/(MHz × V)) × V_{CC} × f [sleep mode]

Table 22-25 Permissible Output Currents

Conditions: V_{CC} = 2.7 to 5.5 V, AV_{CC} = 2.7 to 5.5 V, V_{ref} = 2.7 to AV_{CC}, V_{SS} = AV_{SS} = 0 V,
T_a = –20 to +75°C (regular specifications), T_a = –40 to +85°C (wide-range specifications)

Item		Symbol	Min	Typ	Max	Unit
Permissible output low current (per pin)	Ports 1, A to C	I_{OL}	—	—	10	mA
	Other output pins		—	—	2.0	mA
Permissible output low current (total)	Total of 32 pins including ports 1 and A to C	ΣI_{OL}	—	—	80	mA
	Total of all output pins, including the above		—	—	120	mA
Permissible output high current (per pin)	All output pins	$-I_{OH}$	—	—	2.0	mA
Permissible output high current (total)	Total of all output pins	$\Sigma -I_{OH}$	—	—	40	mA

Notes: 1. To protect chip reliability, do not exceed the output current values in table 22-25.
2. When driving a darlington pair or LED directly, always insert a current-limiting resistor in the output line, as show in figures 22-65 and 22-66.

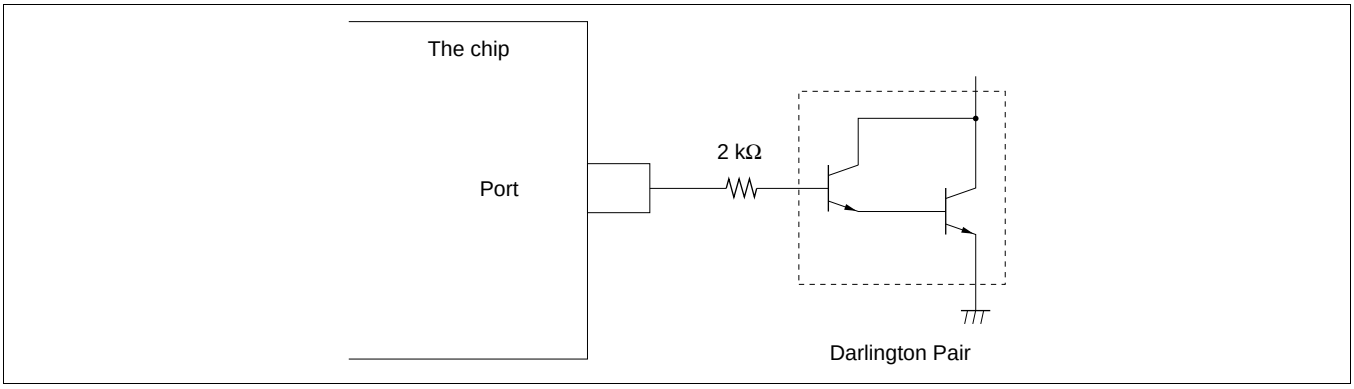

Figure 22-65 Darlington Pair Drive Circuit (Example)

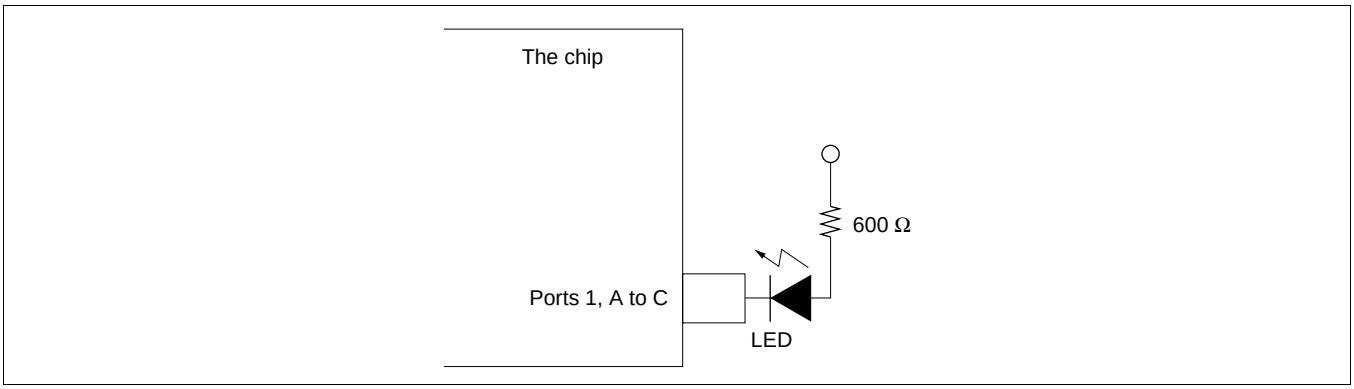

Figure 22-66 LED Drive Circuit (Example)

22.6.3 AC Characteristics

Figure 22-67 show, the test conditions for the AC characteristics.

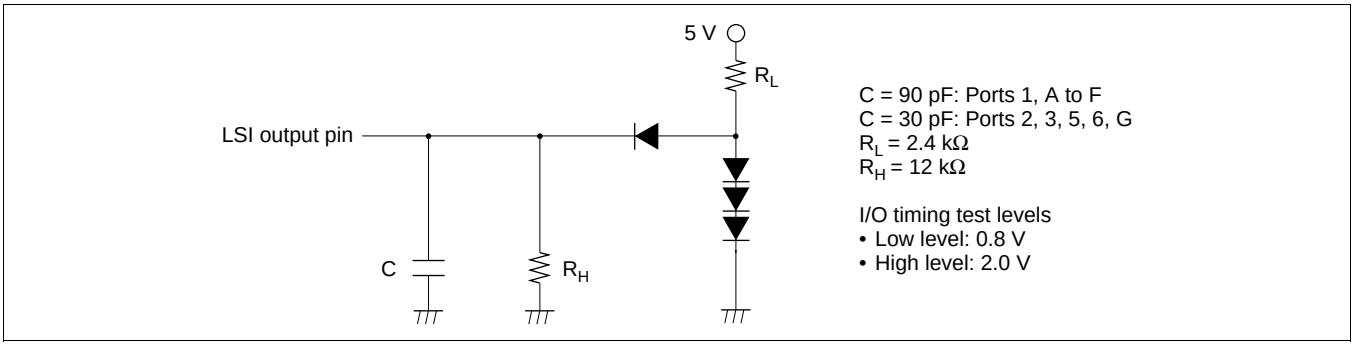

Figure 22-67 Output Load Circuit

(1) Clock Timing

Table 22-26 lists the clock timing

Table 22-26 Clock Timing

Condition A: V_{CC} = 2.7 to 5.5 V, AV_{CC} = 2.7 to 5.5 V, V_{ref} = 2.7 V to AV_{CC},
V_{SS} = AV_{SS} = 0 V, ø = 2 to 10 MHz, T_a = –20 to +75°C (regular specifications),
T_a = –40 to +85°C (wide-range specifications)

Condition B: V_{CC} = 5.0 V ± 10%, AV_{CC} = 5.0 V ± 10%, V_{ref} = 4.5 V to AV_{CC},
V_{SS} = AV_{SS} = 0 V, ø = 2 to 20 MHz, T_a = –20 to +75°C (regular specifications),
T_a = –40 to +85°C (wide-range specifications)

Condition C: V_{CC} = 3.0 to 5.5 V, AV_{CC} = 3.0 to 5.5 V, V_{ref} = 3.0 V to AV_{CC},
V_{SS} = AV_{SS} = 0 V, ø = 2 to 13 MHz, T_a = –20 to +75°C (regular specifications),
T_a = –40 to +85°C (wide-range specifications)

		Condition A		Condition B		Condition C			Test
Item	**Symbol**	**Min**	**Max**	**Min**	**Max**	**Min**	**Max**	**Unit**	**Conditions**
Clock cycle time	t_{cyc}	100	500	50	500	76	500	ns	Figure 22-68
Clock high pulse width	t_{CH}	35	—	20	—	23	—	ns	
Clock low pulse width	t_{CL}	35	—	20	—	23	—	ns	
Clock rise time	t_{Cr}	—	15	—	5	—	15	ns	
Clock fall time	t_{Cf}	—	15	—	5	—	15	ns	
Clock oscillator setting time at reset (crystal)	t_{OSC1}	20	—	10	—	20	—	ms	Figure 22-69
Clock oscillator setting time in software standby (crystal)	t_{OSC2}	20	—	10	—	20	—	ms	Figure 21-2
External clock output stabilization delay time	t_{DEXT}	500	—	500	—	500	—	µs	Figure 22-69

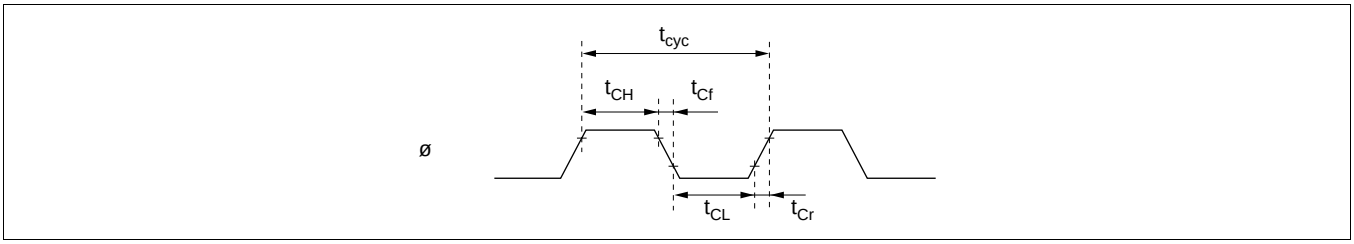

Figure 22-68 System Clock Timing

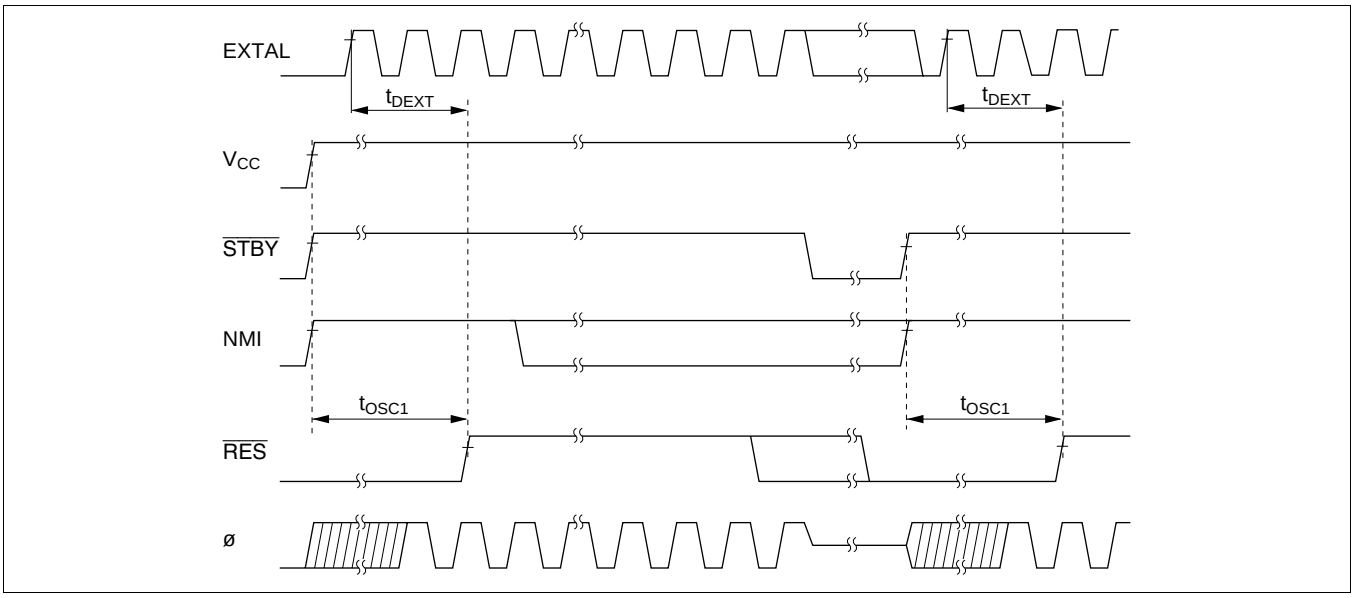

Figure 22-69 Oscillator Settling Timing

(2) Control Signal Timing

Table 22-27 lists the control signal timing.

Table 22-27 Control Signal Timing

Condition A: V_{CC} = 2.7 to 5.5 V, AV_{CC} = 2.7 to 5.5 V, V_{ref} = 2.7 V to AV_{CC},
V_{SS} = AV_{SS} = 0 V, ø = 2 to 10 MHz, T_a = –20 to +75°C (regular specifications),
T_a = –40 to +85°C (wide-range specifications)

Condition B: V_{CC} = 5.0 V ± 10%, AV_{CC} = 5.0 V ± 10%, V_{ref} = 4.5 V to AV_{CC},
V_{SS} = AV_{SS} = 0 V, ø = 2 to 20 MHz, T_a = –20 to +75°C (regular specifications),
T_a = –40 to +85°C (wide-range specifications)

Condition C: V_{CC} = 3.0 to 5.5 V, AV_{CC} = 3.0 to 5.5 V, V_{ref} = 3.0 V to AV_{CC},
V_{SS} = AV_{SS} = 0 V, ø = 2 to 13 MHz, T_a = –20 to +75°C (regular specifications),
T_a = –40 to +85°C (wide-range specifications)

		Condition A		Condition B		Condition C			Test
Item	**Symbol**	**Min**	**Max**	**Min**	**Max**	**Min**	**Max**	**Unit**	**Conditions**
$\overline{RES}$ setup time	t_{RESS}	200	—	200	—	200	—	ns	Figure 22-70
$\overline{RES}$ pulse width	t_{RESW}	20	—	20	—	20	—	t_{cyc}	
NMI reset setup time*	t_{NMIRS}	250	—	200	—	250	—	ns	
NMI reset hold time*	t_{NMIRH}	200	—	200	—	200	—	ns	
NMI setup time	t_{NMIS}	250	—	150	—	250	—	ns	Figure 22-71
NMI hold time	t_{NMIH}	10	—	10	—	10	—	ns	
NMI pulse width (exiting software standby mode)	t_{NMIW}	200	—	200	—	200	—	ns	
$\overline{IRQ}$ setup time	t_{IRQS}	250	—	150	—	250	—	ns	
$\overline{IRQ}$ hold time	t_{IRQH}	10	—	10	—	10	—	ns	
$\overline{IRQ}$ pulse width (exiting software standby mode)	t_{IRQW}	200	—	200	—	200	—	ns	

Note: * Applies to the ZTAT version only.

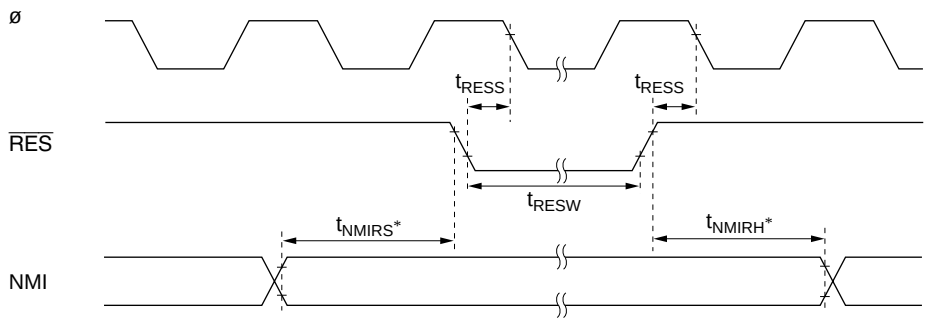

Note: * Applies to the ZTAT version only.

Figure 22-70 Reset Input Timing

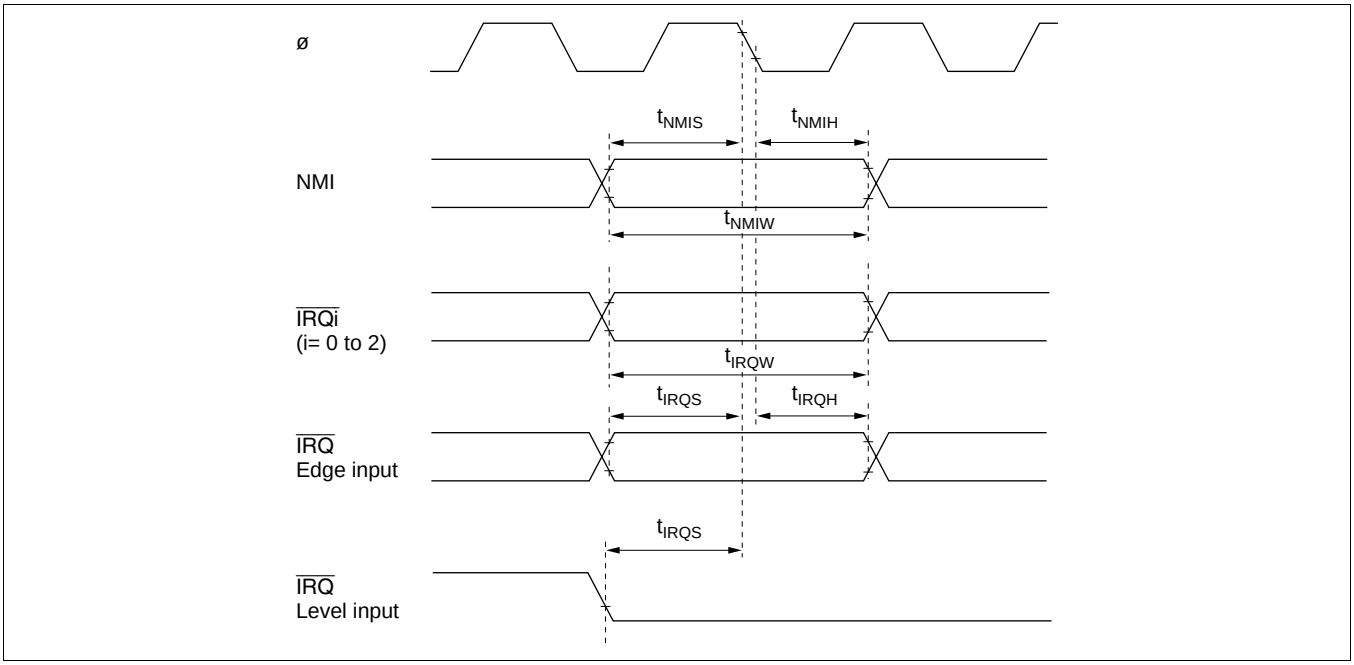

Figure 22-71 Interrupt Input Timing

(3) Bus Timing

Table 22-28 lists the bus timing.

Table 22-28 Bus Timing

Condition A: V_{CC} = 2.7 to 5.5 V, AV_{CC} = 2.7 to 5.5 V, V_{ref} = 2.7 V to AV_{CC},
V_{SS} = AV_{SS} = 0 V, ø = 2 to 10 MHz, T_a = –20 to +75°C (regular specifications),
T_a = –40 to +85°C (wide-range specifications)

Condition B: V_{CC} = 5.0 V ± 10%, AV_{CC} = 5.0 V ± 10%, V_{ref} = 4.5 V to AV_{CC},
V_{SS} = AV_{SS} = 0 V, ø= 2 to 20 MHz, T_a = –20 to +75°C (regular specifications),
T_a = –40 to +85°C (wide-range specifications)

Condition C: V_{CC} = 3.0 to 5.5 V, AV_{CC} = 3.0 to 5.5 V, V_{ref} = 3.0 V to AV_{CC},
V_{SS} = AV_{SS} = 0 V, ø = 2 to 13 MHz, T_a = –20 to +75°C (regular specifications),
T_a = –40 to +85°C (wide-range specifications)

		Condition A		Condition B		Condition C			Test
Item	**Symbol**	**Min**	**Max**	**Min**	**Max**	**Min**	**Max**	**Unit**	**Conditions**
Address delay time	t_{AD}	—	40	—	20	—	40	ns	Figure 22-72 to Figure 22-79
Address setup time	t_{AS}	0.5 × t_{cyc} – 30	—	0.5 × t_{cyc} – 15	—	0.5 × t_{cyc} – 30	—	ns	
Address hold time	t_{AH}	0.5 × t_{cyc} – 20	—	0.5 × t_{cyc} – 10	—	0.5 × t_{cyc} – 20	—	ns	
Precharge time	t_{PCH}	1.5 × t_{cyc} – 40	—	1.5 × t_{cyc} – 20	—	1.5 × t_{cyc} – 40	—	ns	
$\overline{CS}$ delay time 1	t_{CSD1}	—	40	—	20	—	40	ns	
$\overline{CS}$ delay time 2	t_{CSD2}	—	40	—	20	—	40	ns	
$\overline{CS}$ delay time 3	t_{CSD3}	—	40	—	25	—	40	ns	
$\overline{AS}$ delay time	t_{ASD}	—	40	—	20	—	40	ns	
$\overline{RD}$ delay time 1	t_{RSD1}	—	40	—	20	—	40	ns	
$\overline{RD}$ delay time 2	t_{RSD2}	—	40	—	20	—	40	ns	
$\overline{CAS}$ delay time	t_{CASD}	—	40	—	20	—	40	ns	
Read data setup time	t_{RDS}	30	—	15	—	30	—	ns	
Read data hold time	t_{RDH}	0	—	0	—	0	—	ns	
Read data access time 1	t_{ACC1}	—	1.0 × t_{cyc} – 50	—	1.0 × t_{cyc} – 25	—	1.0 × t_{cyc} – 50	ns	
Read data access time 2	t_{ACC2}	—	1.5 × t_{cyc} – 50	—	1.5 × t_{cyc} – 25	—	1.5 × t_{cyc} – 50	ns	
Read data access time 3	t_{ACC3}	—	2.0 × t_{cyc} – 50	—	2.0 × t_{cyc} – 25	—	2.0 × t_{cyc} – 50	ns	
Read data access time 4	t_{ACC4}	—	2.5 × t_{cyc} – 50	—	2.5 × t_{cyc} – 25	—	2.5 × t_{cyc} – 50	ns	
Read data access time 5	t_{ACC5}	—	3.0 × t_{cyc} – 50	—	3.0 × t_{cyc} – 25	—	3.0 × t_{cyc} – 50	ns	
$\overline{WR}$ delay time 1	t_{WRD1}	—	40	—	20	—	40	ns	
$\overline{WR}$ delay time 2	t_{WRD2}	—	40	—	20	—	40	ns	
$\overline{WR}$ pulse width 1	t_{WSW1}	1.0 × t_{cyc} – 40	—	1.0 × t_{cyc} – 20	—	1.0 × t_{cyc} – 40	—	ns	

Item	Symbol	Condition A Min	Condition A Max	Condition B Min	Condition B Max	Condition C Min	Condition C Max	Unit	Test Conditions
$\overline{WR}$ pulse width 2	t_{WSW2}	1.5 × t_{cyc} – 40	—	1.5 × t_{cyc} – 20	—	1.5 × t_{cyc} – 40	—	ns	Figure 22-72 to Figure 22-79
Write data delay time	t_{WDD}	—	60	—	30	—	60	ns	
Write data setup time	t_{WDS}	0.5 × t_{cyc} – 40	—	0.5 × t_{cyc} – 20	—	0.5 × t_{cyc} – 33	—	ns	
Write data hold time	t_{WDH}	0.5 × t_{cyc} – 20	—	0.5 × t_{cyc} – 10	—	0.5 × t_{cyc} – 20	—	ns	
$\overline{WR}$ setup time	t_{WCS}	0.5 × t_{cyc} – 20	—	0.5 × t_{cyc} – 10	—	0.5 × t_{cyc} – 20	—	ns	
$\overline{WR}$ hold time	t_{WCH}	0.5 × t_{cyc} – 20	—	0.5 × t_{cyc} – 10	—	0.5 × t_{cyc} – 20	—	ns	
$\overline{CAS}$ setup time	t_{CSR}	0.5 × t_{cyc} – 20	—	0.5 × t_{cyc} – 10	—	0.5 × t_{cyc} – 20	—	ns	Figure 22-76
$\overline{WAIT}$ setup time	t_{WTS}	60	—	30	—	60	—	ns	Figure 22-74
$\overline{WAIT}$ hold time	t_{WTH}	10	—	5	—	10	—	ns	
$\overline{BREQ}$ setup time	t_{BRQS}	60	—	30	—	60	—	ns	Figure 22-80
$\overline{BACK}$ delay time	t_{BACD}	—	30	—	15	—	30	ns	
Bus-floating time	t_{BZD}	—	100	—	50	—	100	ns	
$\overline{BREQO}$ delay time	t_{BRQOD}	—	60	—	30	—	60	ns	Figure 22-81

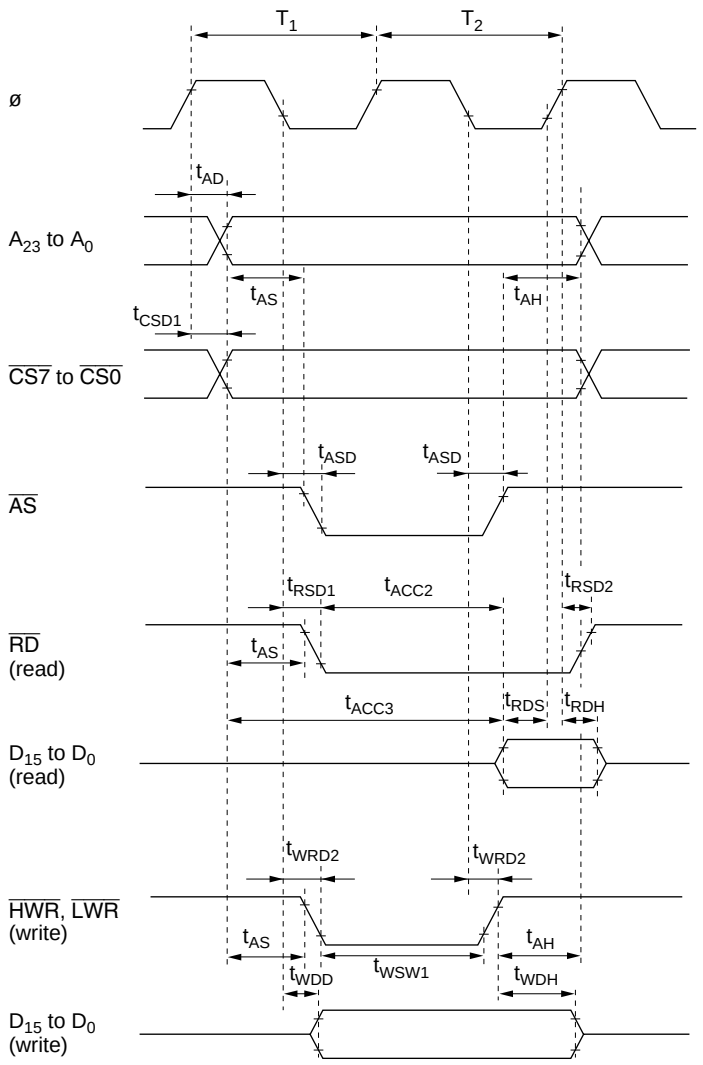

Figure 22-72 Basic Bus Timing (Two-State Access)

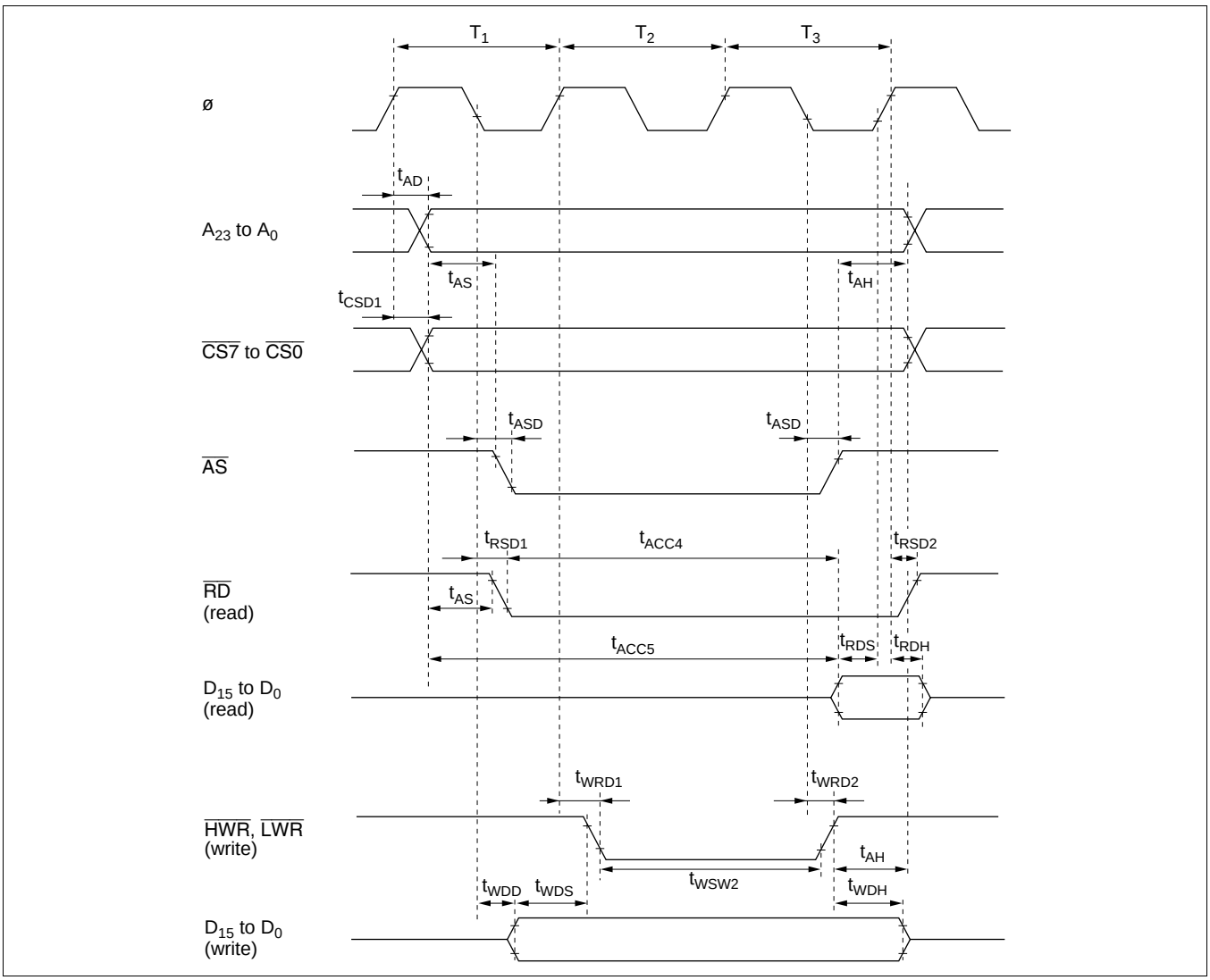

Figure 22-73 Basic Bus Timing (Three-State Access)

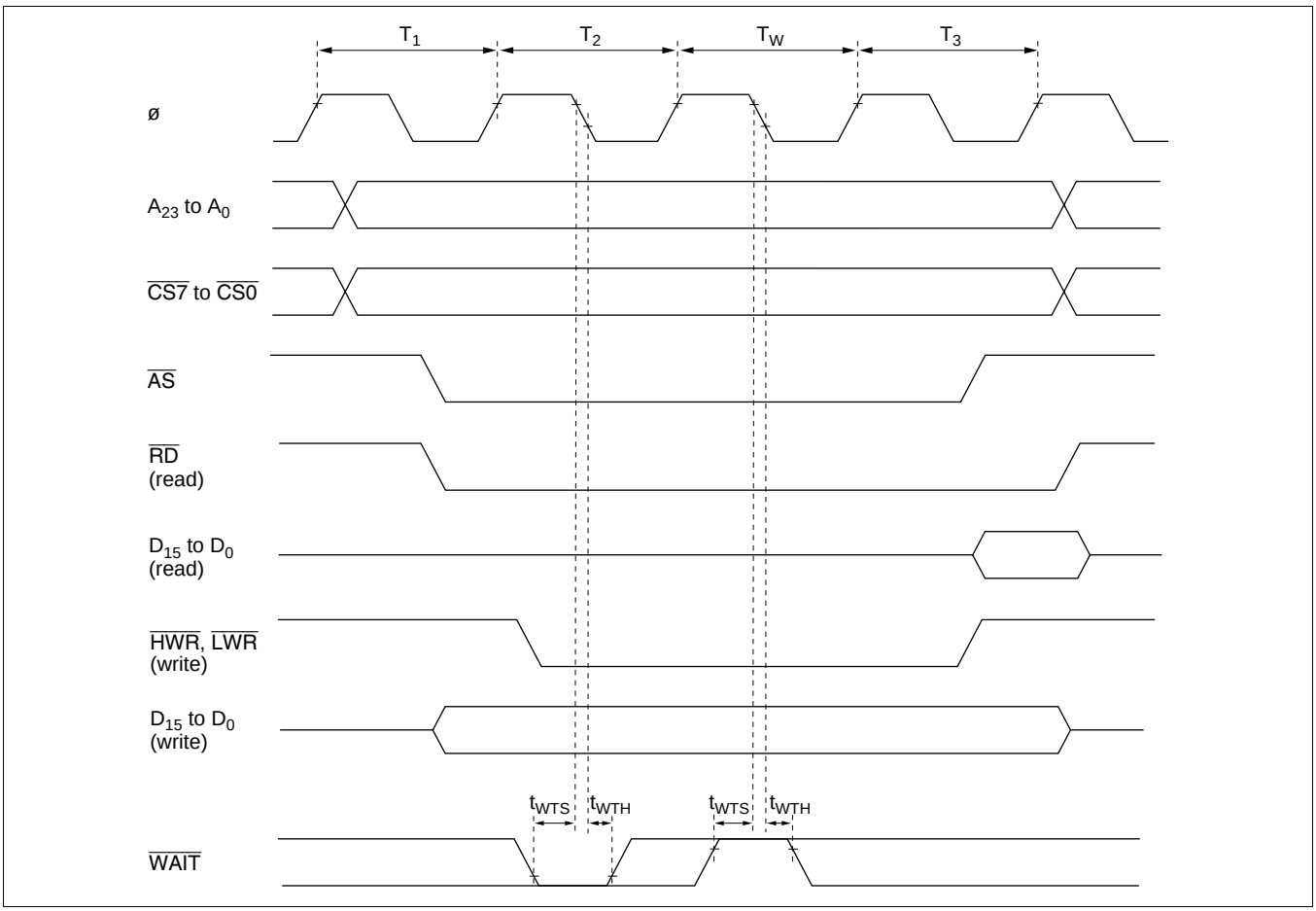

Figure 22-74 Basic Bus Timing (Three-State Access with One Wait State)

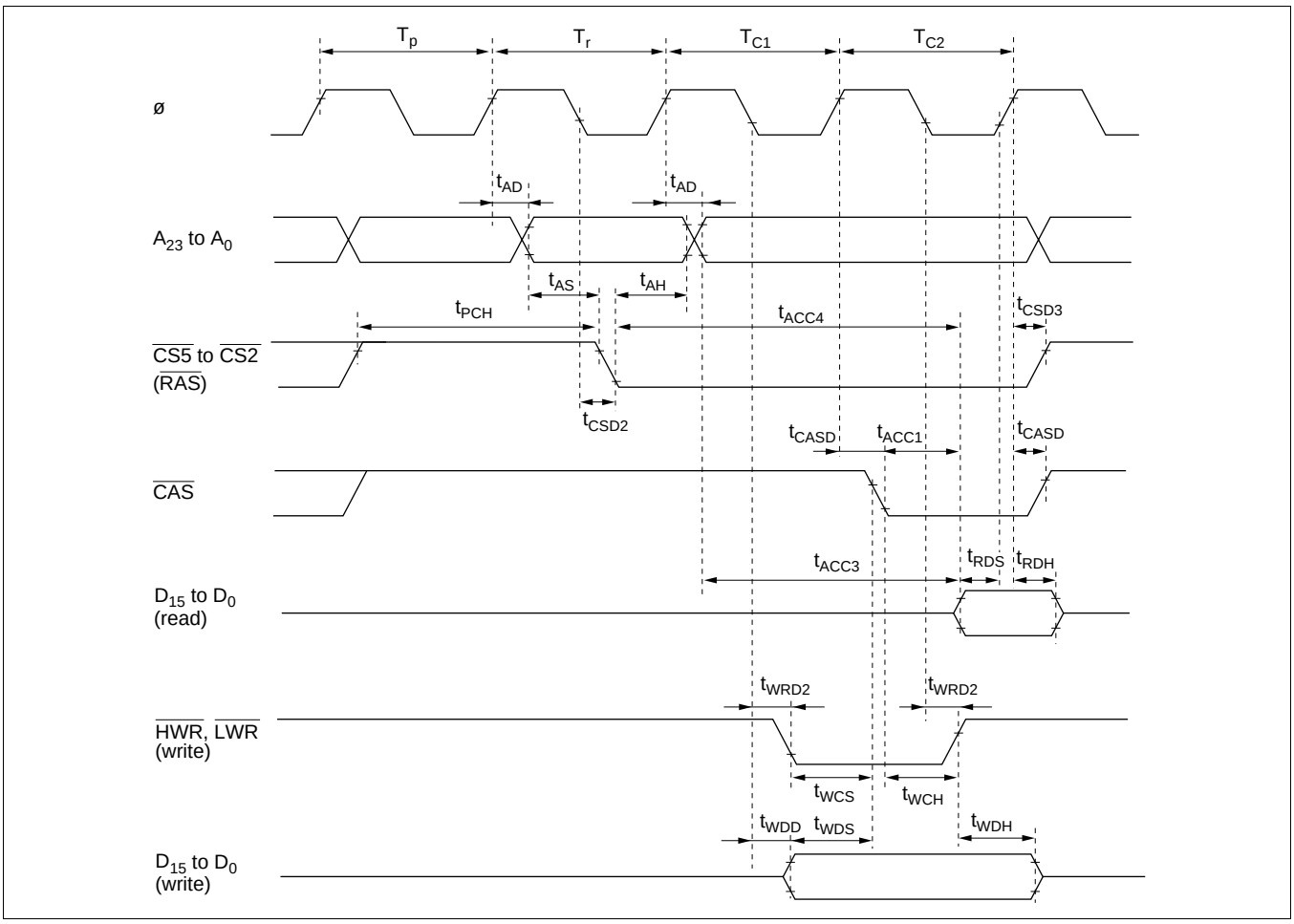

Figure 22-75 DRAM Bus Timing

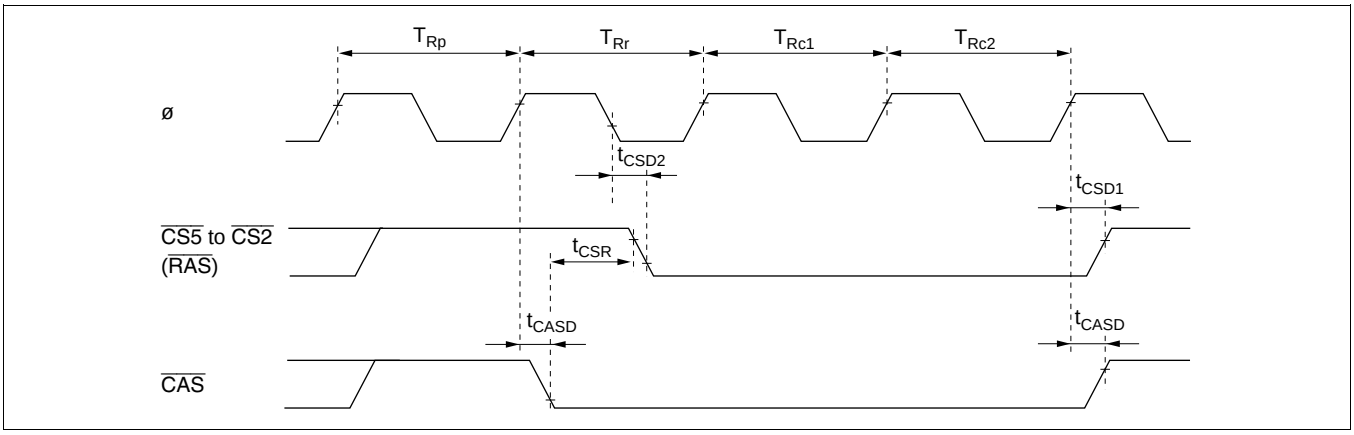

Figure 22-76 CAS-Before-RAS Refresh Timing

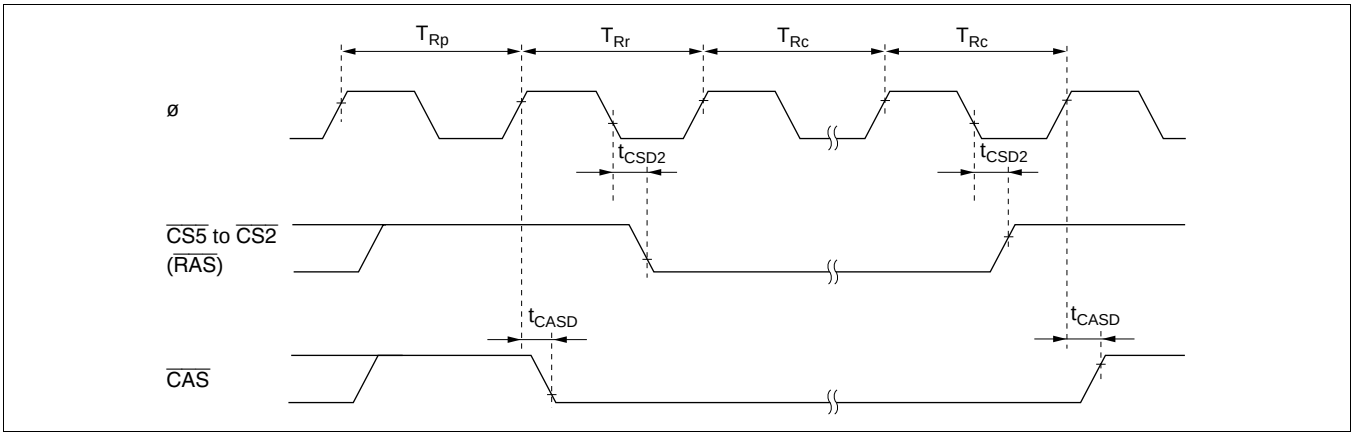

Figure 22-77 Self-Refresh Timing

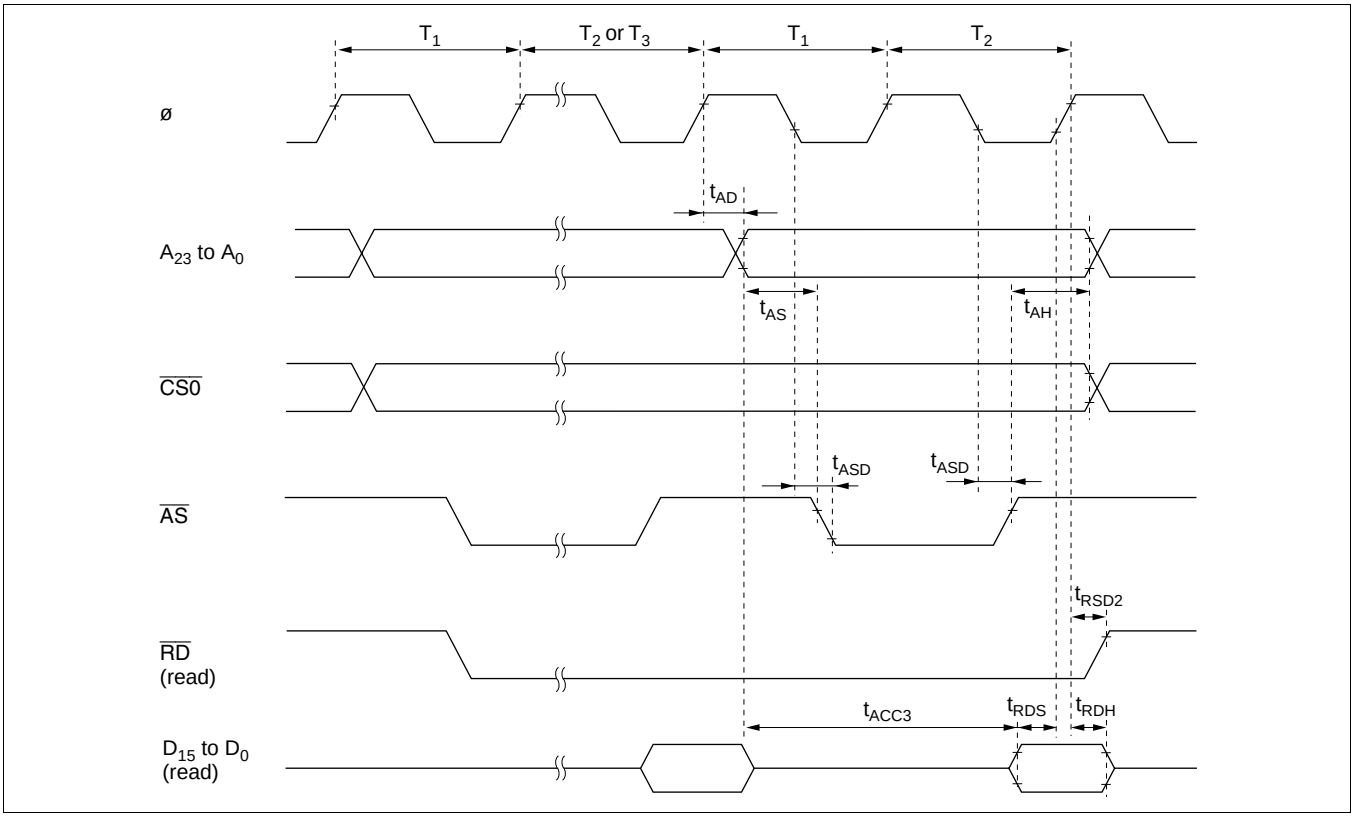

Figure 22-78 Burst ROM Access Timing (Two-State Access)

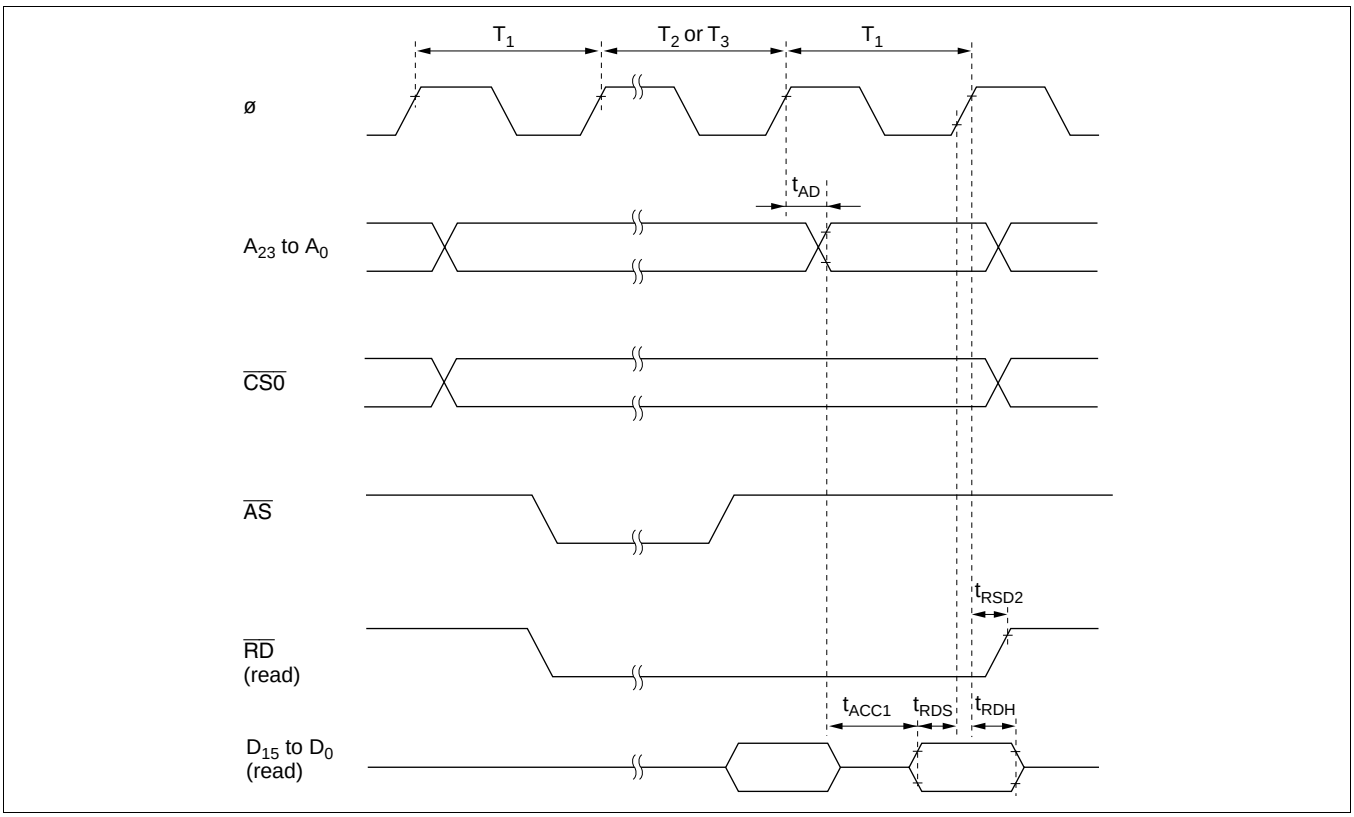

Figure 22-79 Burst ROM Access Timing (One-State Access)

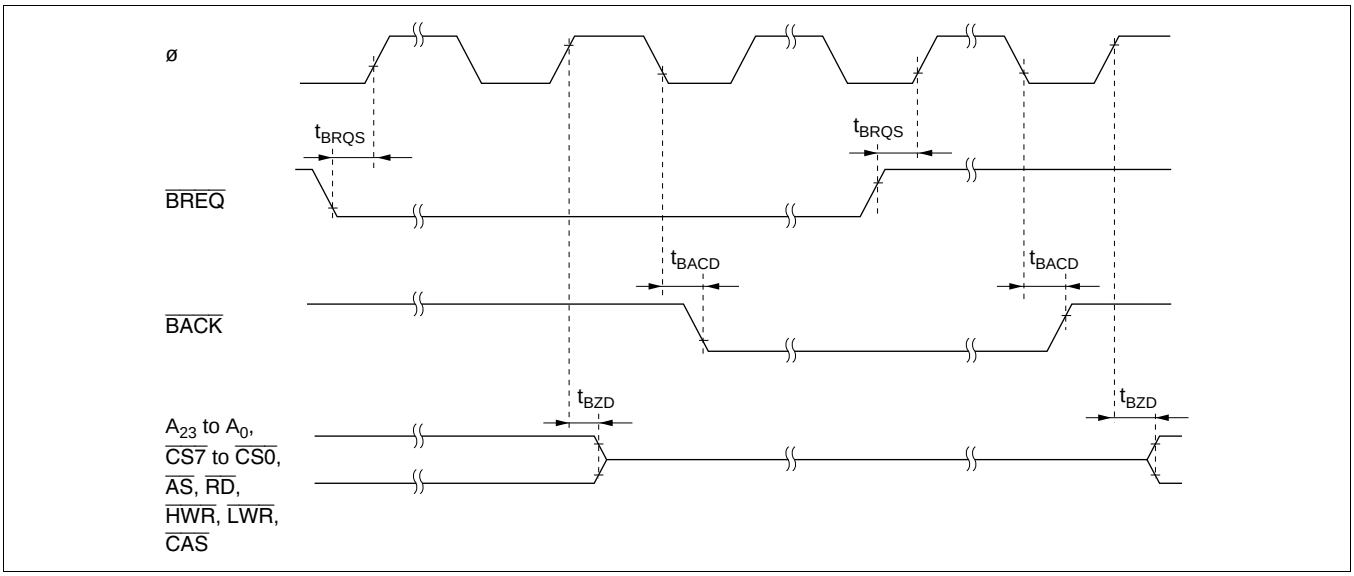

Figure 22-80 External Bus Release Timing

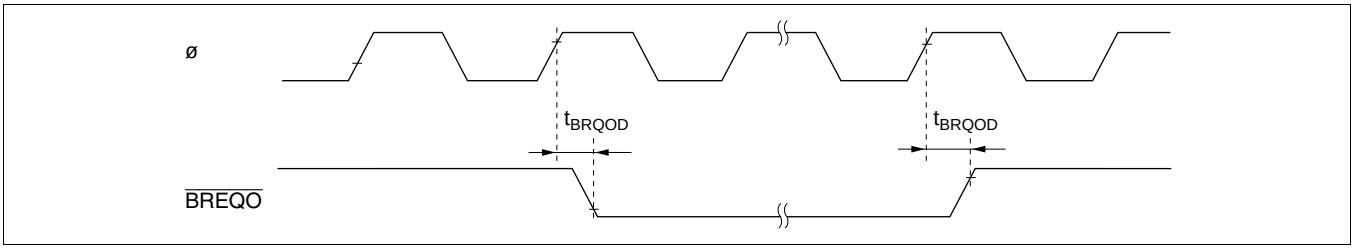

Figure 22-81 External Bus Request Output Timing

(4) DMAC Timing

Table 22-29 lists the DMAC timing.

Table 22-29 DMAC Timing

Condition A: V_{CC} = 2.7 V to 5.5 V, AV_{CC} = 2.7 V to 5.5 V, V_{ref} = 2.7 V to AV_{CC},
V_{SS} = AV_{SS} = 0V, ø = 2 to 10 MHz, T_a = –20 to +75°C (regular specifications),
T_a = –40 to +85°C (wide-range specifications)

Condition B: V_{CC} = 5.0 V ± 10%, AV_{CC} = 5.0 V ± 10%, V_{ref} = 4.5 V to AV_{CC},
V_{SS} = AV_{SS} = 0 V, ø = 2 to 20 MHz, T_a = –20 to +75°C (regular specifications),
T_a = –40 to +85°C (wide-range specifications)

Condition C: V_{CC} = 3.0 to 5.5 V, AV_{CC} = 3.0 to 5.5 V, V_{ref} = 3.0 V to AV_{CC},
V_{SS} = AV_{SS} = 0 V, ø = 2 to 13 MHz, T_a = –20 to +75°C (regular specifications),
T_a = –40 to +85°C (wide-range specifications)

		Condition A		Condition B		Condition C			Test
Item	**Symbol**	**Min**	**Max**	**Min**	**Max**	**Min**	**Max**	**Unit**	**Conditions**
$\overline{\text{DREQ}}$ setup time	t_{DRQS}	40	—	30	—	40	—	ns	Figure 22-85
$\overline{\text{DREQ}}$ hold time	t_{DRQH}	10	—	10	—	10	—		
$\overline{\text{TEND}}$ delay time	t_{TED}	—	40	—	20	—	40		Figure 22-84
$\overline{\text{DACK}}$ delay time 1	t_{DACD1}	—	40	—	20	—	40	ns	Figure 22-82, Figure 22-83
$\overline{\text{DACK}}$ delay time 2	t_{DACD2}	—	40	—	20	—	40		

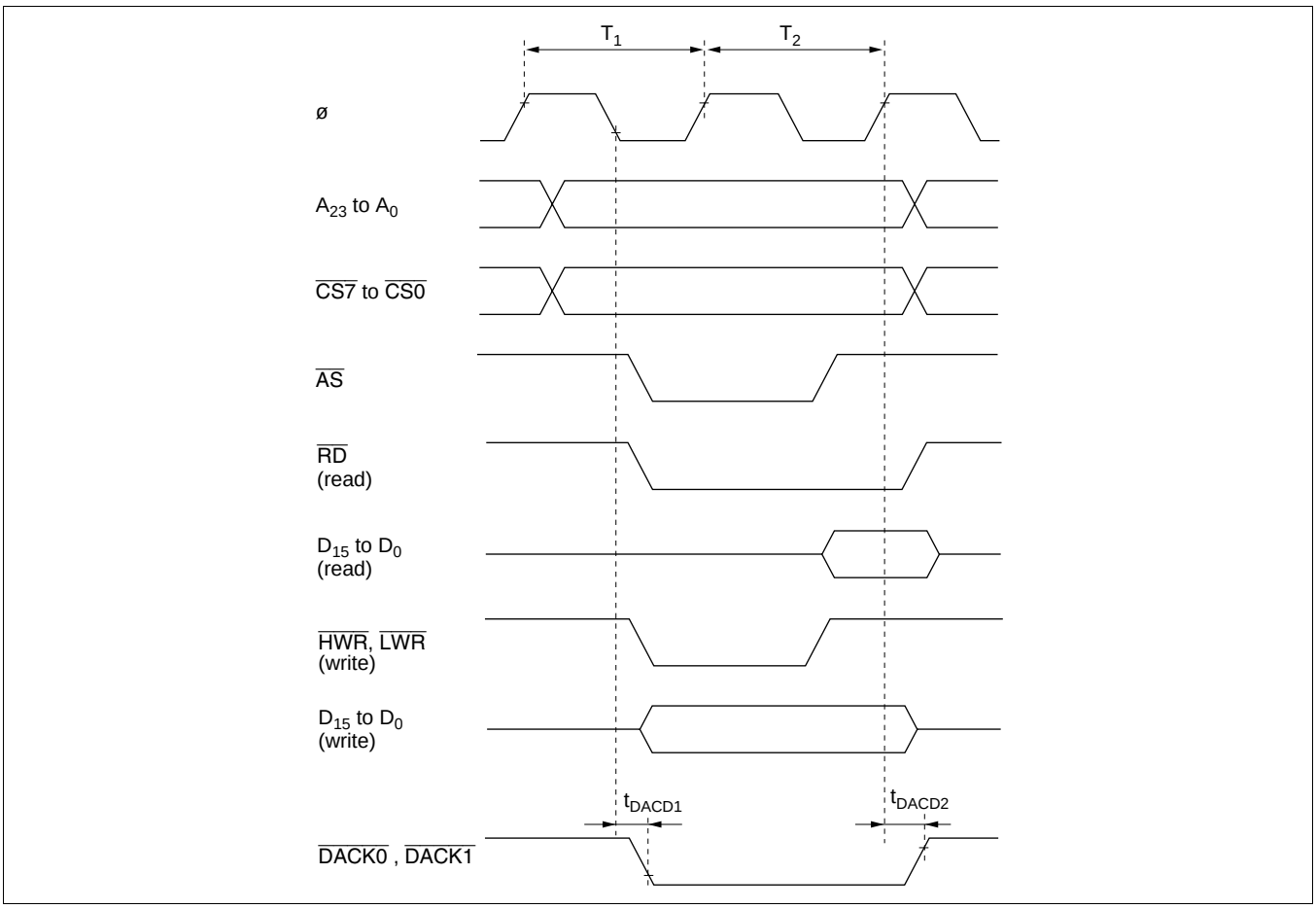

Figure 22-82 DMAC Single Address Transfer Timing (Two-State Access)

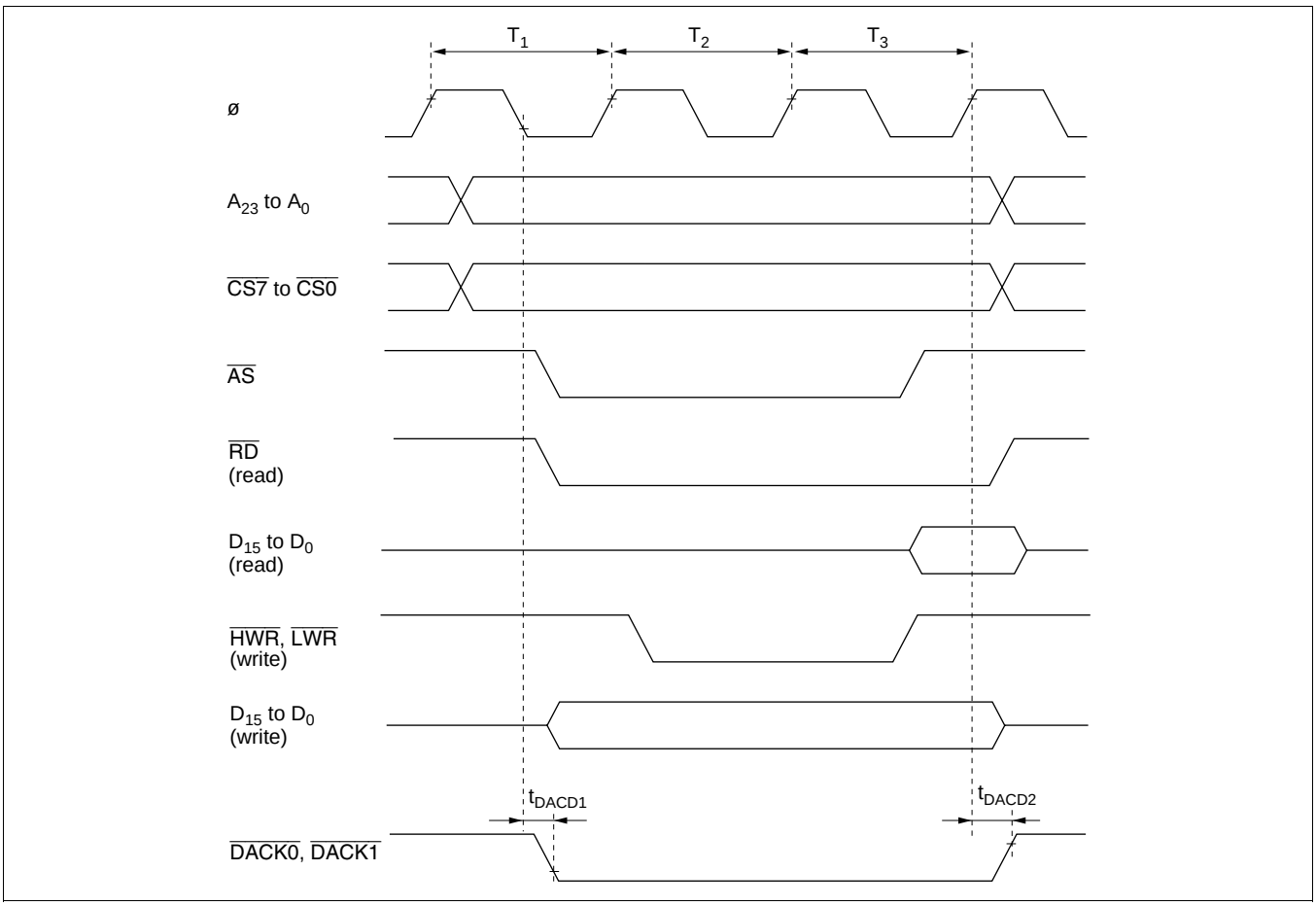

Figure 22-83 DMAC Single Address Transfer Timing (Three-State Access)

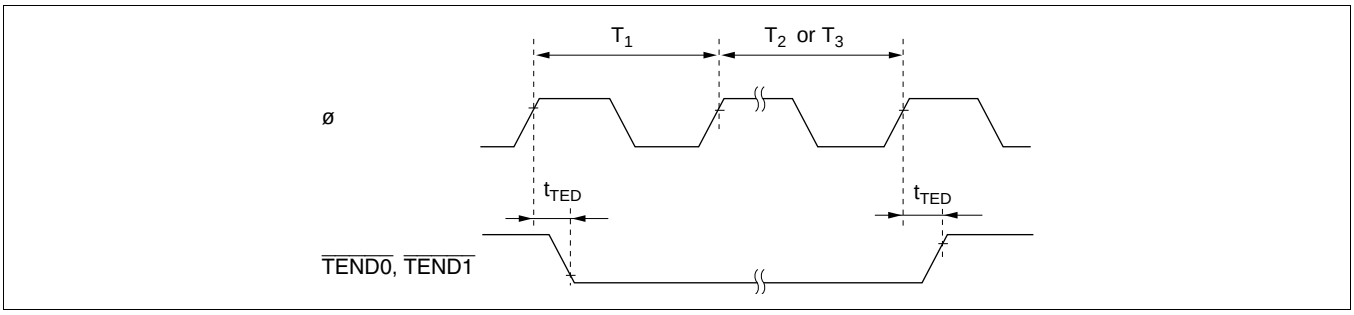

Figure 22-84 DMAC $\overline{\text{TEND}}$ Output Timing

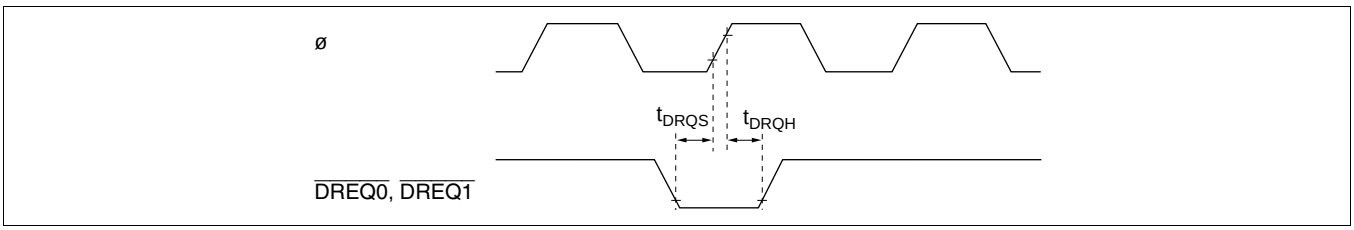

Figure 22-85 DMAC $\overline{\text{DREQ}}$ Intput Timing

(5) Timing of On-Chip Supporting Modules

Table 22-30 lists the timing of on-chip supporting modules.

Table 22-30 Timing of On-Chip Supporting Modules

Condition A: V_{CC} = 2.7 V to 5.5 V, AV_{CC} = 2.7 V to 5.5 V, V_{ref} = 2.7 V to AV_{CC},
V_{SS} = AV_{SS} = 0 V, ø = 2 to 10 MHz, T_a = –20 to +75°C (regular specifications),
T_a = –40 to +85°C (wide-range specifications)

Condition B: V_{CC} = 5.0 V ± 10%, AV_{CC} = 5.0 V ± 10%, V_{ref} = 4.5 V to AV_{CC},
V_{SS} = AV_{SS} = 0 V, ø = 2 to 20 MHz, T_a = –20 to +75°C (regular specifications),
T_a = –40 to +85°C (wide-range specifications)

Condition C: V_{CC} = 3.0 to 5.5 V, AV_{CC} = 3.0 to 5.5 V, V_{ref} = 3.0 V to AV_{CC},
V_{SS} = AV_{SS} = 0 V, ø = 2 to 13 MHz, T_a = –20 to +75°C (regular specifications),
T_a = –40 to +85°C (wide-range specifications)

				Condition A		Condition B		Condition C			
Item			**Symbol**	**Min**	**Max**	**Min**	**Max**	**Min**	**Max**	**Unit**	**Test Conditions**
PORT	Output data delay time		t_{PWD}	—	100	—	50	—	75	ns	Figure 22-86
	Input data setup time		t_{PRS}	50	—	30	—	50	—		
	Input data hold time		t_{PRH}	50	—	30	—	50	—		
PPG	Pulse output delay time		t_{POD}	—	100	—	50	—	75	ns	Figure 22-87
TPU	Timer output delay time		t_{TOCD}	—	100	—	50	—	75	ns	Figure 22-88
	Timer input setup time		t_{TICS}	50	—	30	—	50	—		
	Timer clock input setup time		t_{TCKS}	50	—	30	—	50	—	ns	Figure 22-89
	Timer clock pulse width	Single edge	t_{TCKWH}	1.5	—	1.5	—	1.5	—	t_{cyc}	
		Both edges	t_{TCKWL}	2.5	—	2.5	—	2.5	—		
TMR	Timer output delay time		t_{TMOD}	—	100	—	50	—	75	ns	Figure 22-90
	Timer reset input setup time		t_{TMRS}	50	—	30	—	50	—	ns	Figure 22-92
	Timer clock input setup time		t_{TMCS}	50	—	30	—	50	—	ns	Figure 22-91
	Timer clock pulse width	Single edge	t_{TMCWH}	1.5	—	1.5	—	1.5	—	t_{cyc}	
		Both edges	t_{TMCWL}	2.5	—	2.5	—	2.5	—		
WDT	Overflow output delay time		t_{WOVD}	—	100	—	50	—	75	ns	Figure 22-93
SCI	Input clock cycle	Asynchro-nous	t_{Scyc}	4	—	4	—	4	—	t_{cyc}	Figure 22-94
		Synchro-nous		6	—	6	—	6	—		
	Input clock pulse width		t_{SCKW}	0.4	0.6	0.4	0.6	0.4	0.6	t_{Scyc}	
	Input clock rise time		t_{SCKr}	—	1.5	—	1.5	—	1.5	t_{cyc}	
	Input clock fall time		t_{SCKf}	—	1.5	—	1.5	—	1.5		

Item		Symbol	Condition A Min	Condition A Max	Condition B Min	Condition B Max	Condition C Min	Condition C Max	Unit	Test Conditions
SCI	Transmit data delay time	t_{TXD}	—	100	—	50	—	75	ns	Figure 22-95
	Receive data setup time (synchronous)	t_{RXS}	100	—	50	—	75	—	ns	
	Receive data hold time (synchronous)	t_{RXH}	100	—	50	—	75	—	ns	
A/D con-verter	Trigger input setup time	t_{TRGS}	50	—	30	—	50	—	ns	Figure 22-96

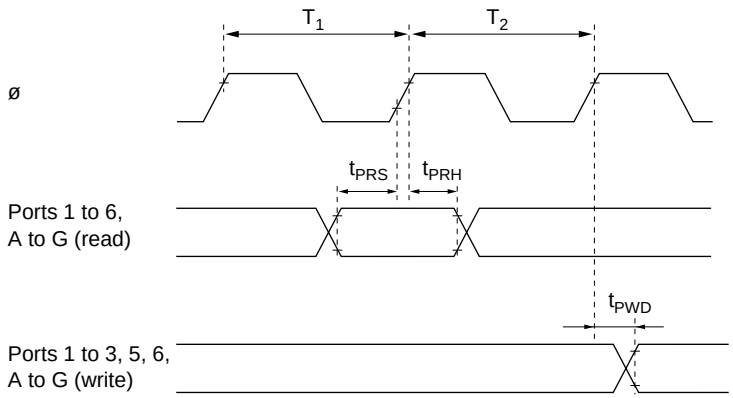

Figure 22-86 I/O Port Input/Output Timing

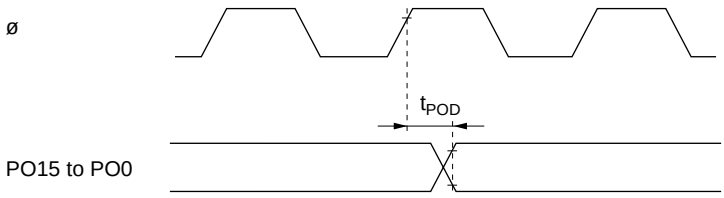

Figure 22-87 PPG Output Timing

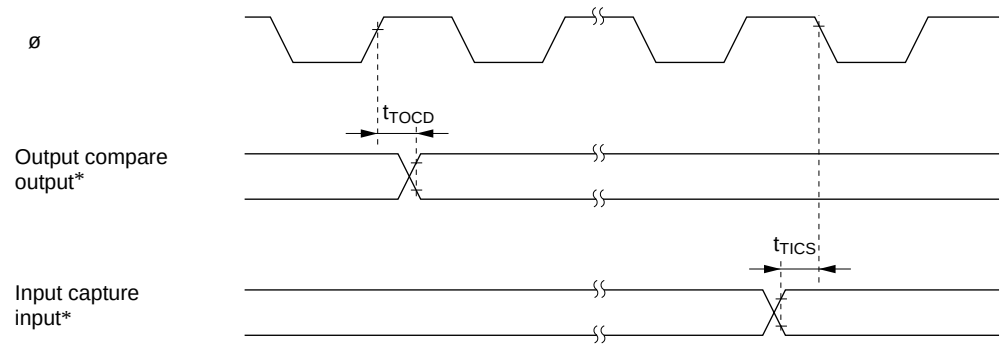

Note: * TIOCA0 to TIOCA5, TIOCB0 to TIOCB5, TIOCC0, TIOCC3, TIOCD0, TIOCD3

Figure 22-88 TPU Input/Output Timing

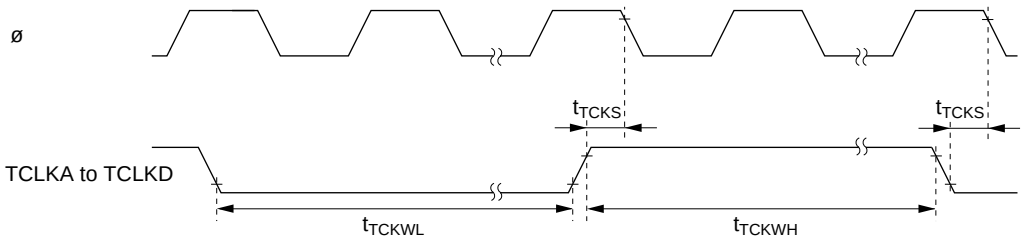

Figure 22-89 TPU Clock Input Timing

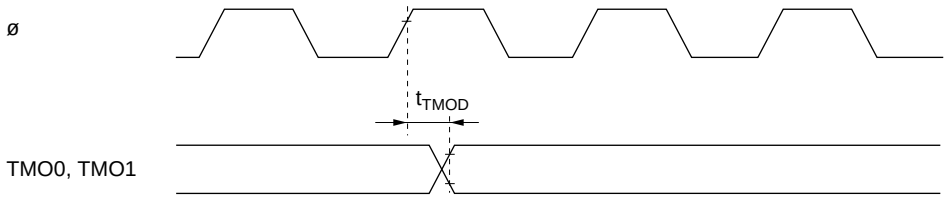

Figure 22-90 8-Bit Timer Output Timing

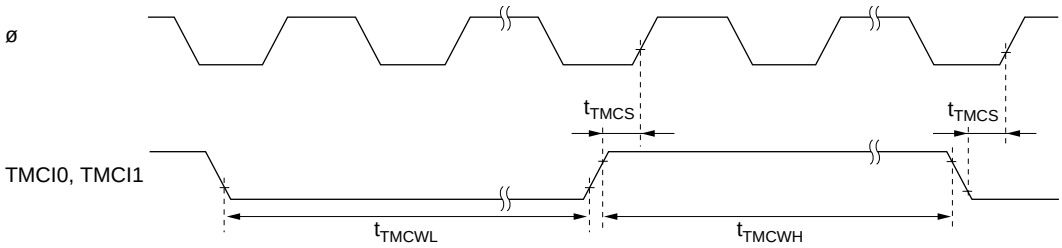

Figure 22-91 8-Bit Timer Clock Input Timing

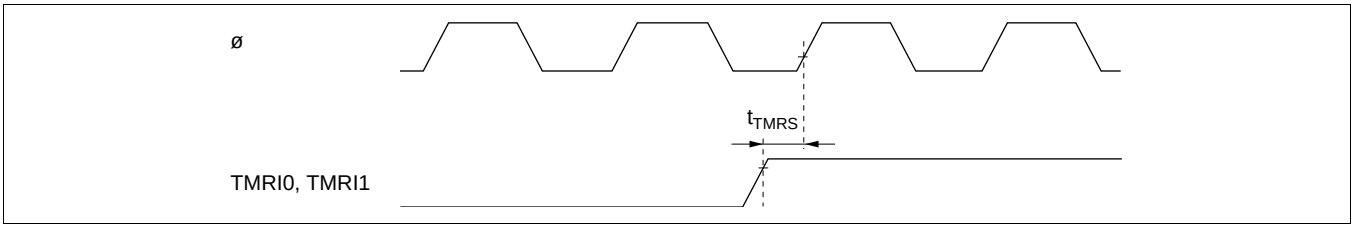

Figure 22-92 8-Bit Timer Reset Input Timing

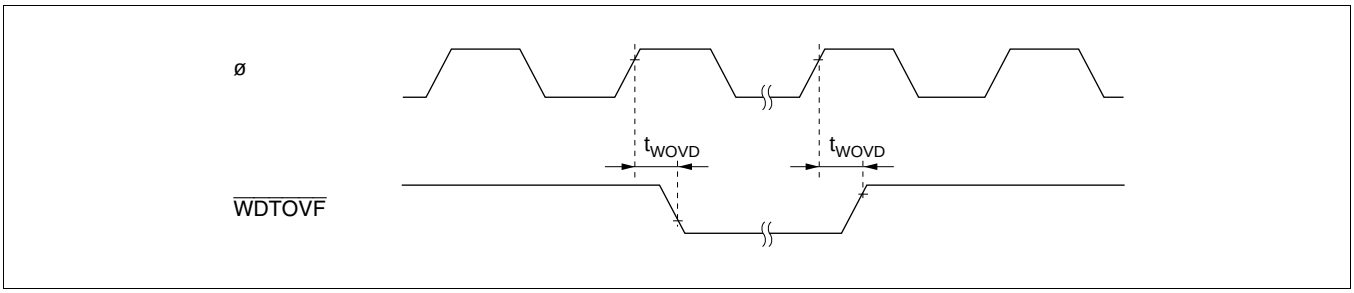

Figure 22-93 WDT Output Timing

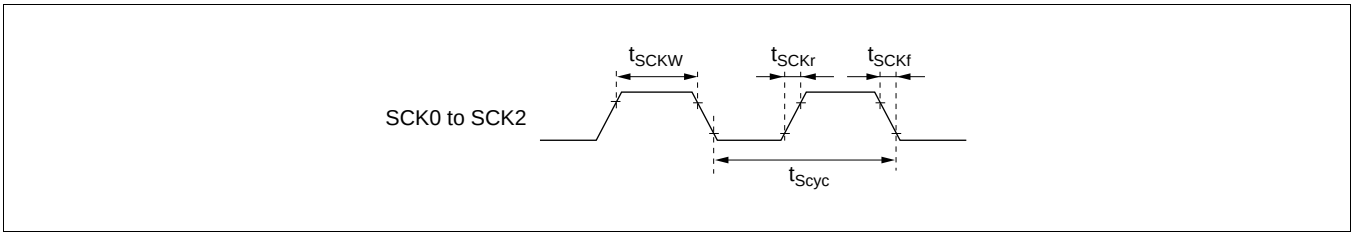

Figure 22-94 SCK Clock Input Timing

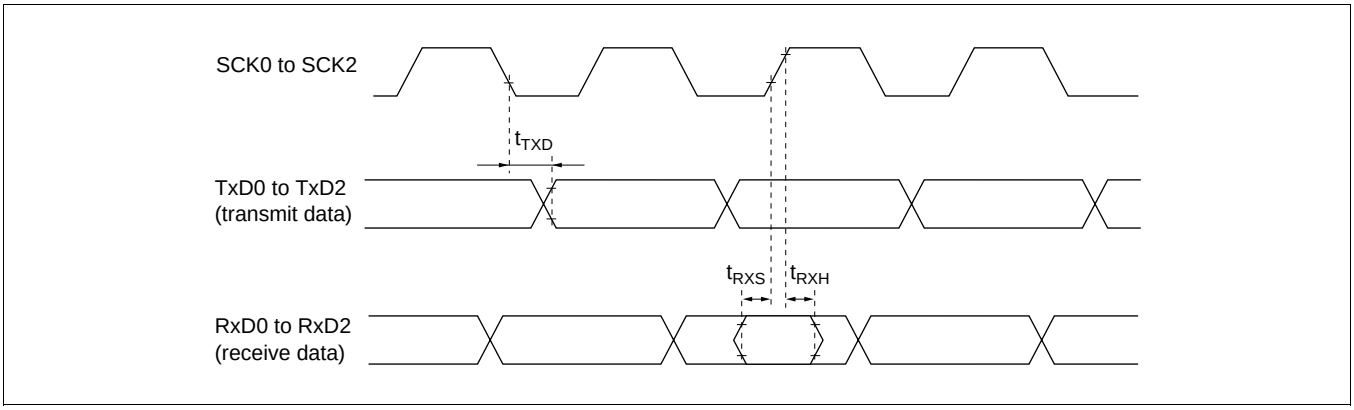

Figure 22-95 SCI Input/Output Timing (Clock Synchronous Mode)

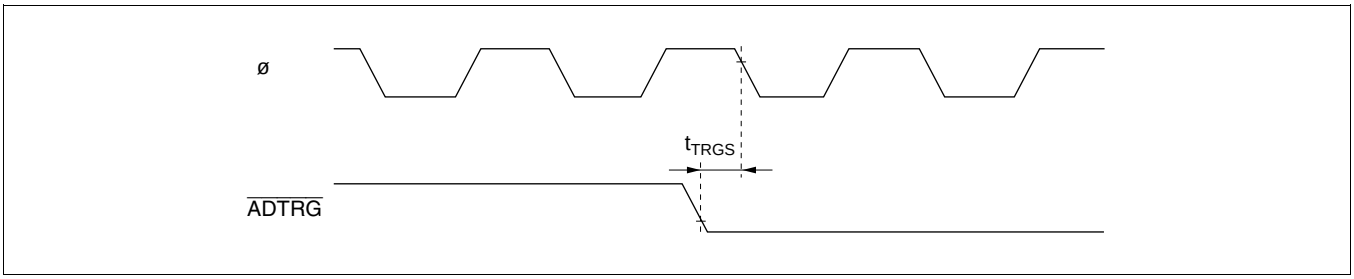

Figure 22-96 A/D Converter External Trigger Input Timing

22.6.4 A/D Conversion Characteristics

Table 22-31 lists the A/D conversion characteristics.

Table 22-31 A/D Conversion Characteristics

Condition A: $V_{CC} = AV_{CC} = 2.7$ V to 5.5 V, $V_{ref} = 2.7$ V to AV_{CC}, $V_{SS} = AV_{SS} = 0$ V,
ø = 2 to 10 MHz, $T_a = -20$ to +75°C (regular specifications),
$T_a = -40$ to +85°C (wide-range specifications)

Condition B: $V_{CC} = AV_{CC} = 5.0$ V ± 10%, $V_{ref} = 4.5$ V to AV_{CC}, $V_{SS} = AV_{SS} = 0$ V,
ø = 2 to 20 MHz, $T_a = -20$ to +75°C (regular specifications),
$T_a = -40$ to +85°C (wide-range specifications)

Condition C: $V_{CC} = AV_{CC} = 3.0$ to 5.5 V, $V_{ref} = 3.0$ V to AV_{CC}, $V_{SS} = AV_{SS} = 0$ V,
ø = 2 to 13 MHz, $T_a = -20$ to +75°C (regular specifications),
$T_a = -40$ to +85°C (wide-range specifications)

	Condition A			Condition B			Condition C			
Item	**Min**	**Typ**	**Max**	**Min**	**Typ**	**Max**	**Min**	**Typ**	**Max**	**Unit**
Resolution	10	10	10	10	10	10	10	10	10	bits
Conversion time	13.4	—	—	6.7	—	—	10.4	—	—	µs
Analog input capacitance	—	—	20	—	—	20	—	—	20	pF
Permissible signal-source impedance	—	—	10*[1]	—	—	10*[3]	—	—	10*[1]	kΩ
	—	—	5*[2]	—	—	5*[4]	—	—	5*[5]	
Nonlinearity error	—	—	±7.5	—	—	±3.5	—	—	±7.5	LSB
Offset error	—	—	±7.5	—	—	±3.5	—	—	±7.5	LSB
Full-scale error	—	—	±7.5	—	—	±3.5	—	—	±7.5	LSB
Quantization	—	—	±0.5	—	—	±0.5	—	—	±0.5	LSB
Absolute accuracy	—	—	±8.0	—	—	±4.0	—	—	±8.0	LSB

Notes:
1. $4.0 \text{ V} \le AV_{CC} \le 5.5$ V
2. $2.7 \text{ V} \le AV_{CC} < 4.0$ V
3. ø ≤ 12 MHz
4. ø > 12 MHz
5. $3.0 \text{ V} \le AV_{CC} < 4.0$ V

22.6.5 D/A Convervion Characteristics

Table 22-32 lists the D/A conversion characteristics

Table 22-32 D/A Conversion Characteristics

Condition A: $V_{CC} = AV_{CC} = 2.7$ V to 5.5 V, $V_{ref} = 2.7$ V to AV_{CC}, $V_{SS} = AV_{SS} = 0$ V,
ø = 2 to 10 MHz, $T_a = -20$ to +75°C (regular specifications),
$T_a = -40$ to +85°C (wide-range specifications)

Condition B: $V_{CC} = AV_{CC} = 5.0$ V ± 10%, $V_{ref} = 4.5$ V to AV_{CC}, $V_{SS} = AV_{SS} = 0$ V,
ø = 2 to 20 MHz, $T_a = -20$ to +75°C (regular specifications),
$T_a = -40$ to +85°C (wide-range specifications)

Condition C: $V_{CC} = AV_{CC} = 3.0$ to 5.5 V, $V_{ref} = 3.0$ V to AV_{CC}, $V_{SS} = AV_{SS} = 0$ V,
ø = 2 to 13 MHz, $T_a = -20$ to +75°C (regular specifications),
$T_a = -40$ to +85°C (wide-range specifications)

	Condition A			Condition B			Condition C				
Item	**Min**	**Typ**	**Max**	**Min**	**Typ**	**Max**	**Min**	**Typ**	**Max**	**Unit**	**Test Conditions**
Resolution	8	8	8	8	8	8	8	8	8	bit	
Conversion time	—	—	10	—	—	10	—	—	10	µs	20-pF capacitive load
Absolute accuracy	—	±2.0	±3.0	—	±1.0	±1.5	—	±2.0	±3.0	LSB	2-MΩ resistive load
	—	—	±2.0	—	—	±1.0	—	—	±2.0	LSB	4-MΩ resistive load

22.7 Electrical Characteristics of H8S/2357 F-ZTAT Version

22.7.1 Absolute Maximum Ratings

Table 22-33 lists the absolute maximum ratings.

Table 22-33 Absolute Maximum Ratings

Item	Symbol	Value	Unit
Power supply voltage	V_{CC}	–0.3 to +7.0	V
Input voltage (FWE)*[1]	V_{in}	–0.3 to V_{CC} +0.3	V
Input voltage (except port 4)*[1]	V_{in}	–0.3 to V_{CC} +0.3	V
Input voltage (port 4)*[1]	V_{in}	–0.3 to AV_{CC} +0.3	V
Reference voltage	V_{ref}	–0.3 to AV_{CC} +0.3	V
Analog power supply voltage	AV_{CC}	–0.3 to +7.0	V
Analog input voltage	V_{AN}	–0.3 to AV_{CC} +0.3	V
Operating temperature	T_{opr}	Regular specifications: –20 to +75*[2]	°C
		Wide-range specifications: –40 to +85*[2]	°C
Storage temperature	T_{stg}	–55 to +125	°C

Caution: Permanent damage to the chip may result if absolute maximum rating are exceeded.

Notes: 1. 12 V must not be applied to any pin, as this will cause permanent damage to the chip.

2. The operating temperature ranges for flash memory programming/erasing are as follows: T_a = 0 to +75°C (regular specifications), T_a = 0 to +85°C (wide-range specifications).

22.7.2 DC Characteristics

Table 22-34 lists the DC characteristics. Table 22-35 lists the permissible output currents.

Table 22-34 DC Characteristics (1)

Conditions: V_{CC} = 5.0 V ± 10%, AV_{CC} = 5.0 V ± 10%, V_{ref} = 4.5 V to AV_{CC}, V_{SS} = AV_{SS} = 0 V*[1], T_a = –20 to +75°C (regular specifications), T_a = –40 to +85°C (wide-range specifications)

Item		Symbol	Min	Typ	Max	Unit	Test Conditions
Schmitt trigger input voltage	Port 2, $P6_4$ to $P6_7$, PA_4 to PA_7	V_T^-	1.0	—	—	V	
		V_T^+	—	—	$V_{CC} \times 0.7$	V	
		$V_T^+ - V_T^-$	0.4	—	—	V	
Input high voltage	$\overline{RES}$, $\overline{STBY}$, NMI, MD_2 to MD_0, FWE	V_{IH}	V_{CC} – 0.7	—	V_{CC} + 0.3	V	
	EXTAL		$V_{CC} \times 0.7$	—	V_{CC} + 0.3	V	
	Ports 1, 3, 5, B to G, $P6_0$ to $P6_3$, PA_0 to PA_3		2.0	—	V_{CC} + 0.3	V	
	Port 4		2.0	—	AV_{CC} + 0.3	V	
Input low voltage	$\overline{RES}$, $\overline{STBY}$, MD_2 to MD_0, FWE	V_{IL}	–0.3	—	0.5	V	

Item		Symbol	Min	Typ	Max	Unit	Test Conditions
Input low voltage	NMI, EXTAL, Ports 1, 3 to 5, B to G, $P6_0$ to $P6_3$, PA_0 to PA_3	V_{IL}	–0.3	—	0.8	V	
Output high voltage	All output pins	V_{OH}	V_{CC} – 0.5	—	—	V	I_{OH} = –200 μA
			3.5	—	—	V	I_{OH} = –1 mA
Output low voltage	All output pins	V_{OL}	—	—	0.4	V	I_{OL} = 1.6 mA
	Ports 1, A to C		—	—	1.0	V	I_{OL} = 10 mA
Input leakage current	$\overline{RES}$	$\lvert I_{in} \rvert$	—	—	10.0	μA	V_{in} = 0.5 V to V_{CC} – 0.5 V
	$\overline{STBY}$, NMI, MD_2 to MD_0, FWE		—	—	1.0	μA	
	Port 4		—	—	1.0	μA	V_{in} = 0.5 V to AV_{CC} – 0.5 V
Three-state leakage current (off state)	Ports 1 to 3, 5, 6, A to G	$\lvert I_{TSI} \rvert$	—	—	1.0	μA	V_{in} = 0.5 V to V_{CC} – 0.5 V
MOS input pull-up current	Ports A to E	$-I_P$	50	—	300	μA	V_{in} = 0 V
Input capacitance	$\overline{RES}$	C_{in}	—	—	80	pF	V_{in} = 0 V f = 1 MHz T_a = 25°C
	NMI		—	—	50	pF	
	All input pins except $\overline{RES}$ and NMI		—	—	15	pF	
Current dissipation*2	Normal operation	I_{CC}*4	—	78 (5.0 V)	122	mA	f = 20 MHz
	Sleep mode		—	53 (5.0 V)	84	mA	f = 20 MHz
	Standby mode*3		—	0.01	5.0	μA	$T_a \leq$ 50°C
			—	—	20.0		50°C < T_a
	Flash memory programming/ erasing		—	88 (5.0 V)	122	mA	0°C ≤ T_a ≤ 75°C f = 20 MHz
Analog power supply current	During A/D and D/A conversion	AI_{CC}	—	0.8 (5.0 V)	2.0	mA	
	Idle		—	0.01	5.0	μA	
Reference current	During A/D and D/A conversion	AI_{CC}	—	2.3 (5.0 V)	3.0	mA	
	Idle		—	0.01	5.0	μA	
RAM standby voltage		V_{RAM}	2.0	—	—	V	

Notes: 1. If the A/D and D/A converters are not used, do not leave the AV_{CC}, AV_{SS}, and V_{ref} pins open. Connect AV_{CC} and V_{ref} to V_{CC}, and connect AV_{SS} to V_{SS}.

2. Current dissipation values are for V_{IH} min = V_{CC} –0.5 V and V_{IL} max = 0.5 V with all output pins unloaded and the on-chip pull-up transistors in the off state.

3. The values are for $V_{RAM} \leq V_{CC}$ < 4.5 V, V_{IH} min = $V_{CC} \times 0.9$, and V_{IL} max = 0.3 V.

4. I_{CC} depends on V_{CC} and f as follows:
I_{CC} max = 1.0 (mA) + 1.1 (mA/(MHz × V)) × V_{CC} × f [normal mode]
I_{CC} max = 1.0 (mA) + 0.75 (mA/(MHz × V)) × V_{CC} × f [sleep mode]

Table 22-34 DC Characteristics (2)

Conditions: V_{CC} = 3.0 to 5.5 V, AV_{CC} = 3.0 to 5.5 V, V_{ref} = 3.0 V to AV_{CC}, V_{SS} = AV_{SS} = 0 V*[1],
T_a = –20 to +75°C (regular specifications), T_a = –40 to +85°C (wide-range specifications)

Item		Symbol	Min	Typ	Max	Unit	Test Conditions
Schmitt trigger input voltage	Port 2, $P6_4$ to $P6_7$, PA_4 to PA_7	V_T^-	$V_{CC} \times 0.2$	—	—	V	
		V_T^+	—	—	$V_{CC} \times 0.7$	V	
		$V_T^+ - V_T^-$	$V_{CC} \times 0.07$	—	—	V	
Input high voltage	$\overline{RES}$, $\overline{STBY}$, NMI, MD_2 to MD_0, FWE	V_{IH}	$V_{CC} \times 0.9$	—	V_{CC} +0.3	V	
	EXTAL		$V_{CC} \times 0.7$	—	V_{CC} +0.3	V	
	Ports 1, 3, 5, B to G, $P6_0$ to $P6_3$, PA_0 to PA_3		$V_{CC} \times 0.7$	—	V_{CC} +0.3	V	
	Port 4		$V_{CC} \times 0.7$	—	AV_{CC} +0.3	V	
Input low voltage	$\overline{RES}$, $\overline{STBY}$, MD_2 to MD_0, FWE	V_{IL}	–0.3	—	$V_{CC} \times 0.1$	V	
	NMI, EXTAL, Ports 1, 3 to 5, B to G, $P6_0$ to $P6_3$, PA_0 to PA_3		–0.3	—	$V_{CC} \times 0.2$	V	V_{CC} < 4.0 V
					0.8		V_{CC} = 4.0 to 5.5 V
Output high voltage	All output pins	V_{OH}	V_{CC} – 0.5	—	—	V	I_{OH} = –200 µA
			V_{CC} – 1.0	—	—	V	I_{OH} = –1 mA
Output low voltage	All output pins	V_{OL}	—	—	0.4	V	I_{OL} = 1.6 mA
	Ports 1, A to C		—	—	1.0	V	$V_{CC} \leq 4$ V I_{OL} = 5 mA 4.0 < $V_{CC} \leq$ 5.5 V I_{OL} = 10 mA
Input leakage current	$\overline{RES}$	$\lvert I_{in} \rvert$	—	—	10.0	µA	V_{in} = 0.5 V to V_{CC} – 0.5 V
	$\overline{STBY}$, NMI, MD_2 to MD_0, FWE		—	—	1.0	µA	
	Port 4		—	—	1.0	µA	V_{in} = 0.5 V to AV_{CC} – 0.5 V
Three-state leakage current (off state)	Ports 1 to 3, 5, 6, A to G	$\lvert I_{TSI} \rvert$	—	—	1.0	µA	V_{in} = 0.5 V to V_{CC} –0.5 V
MOS input pull-up current	Ports A to E	$-I_P$	10	—	300	µA	V_{CC} = 3.0 to 5.5 V, V_{in} = 0 V
Input capacitance	$\overline{RES}$	C_{in}	—	—	80	pF	V_{in} = 0 V f = 1 MHz T_a = 25°C
	NMI		—	—	50	pF	
	All input pins except $\overline{RES}$ and NMI		—	—	15	pF	

Item		Symbol	Min	Typ	Max	Unit	Test Conditions
Current dissipation*2	Normal operation	I_{CC}*4	—	32 (3.3 V)	80	mA	f = 13 MHz
	Sleep mode		—	22 (3.3 V)	55	mA	f = 13 MHz
	Standby mode*3		—	0.01	5.0	μA	$T_a \leq 50°C$
			—	—	20		$50°C < T_a$
	Flash memory programming/ erasing		—	42 (3.3 V)	80	mA	$0°C \leq T_a \leq 75°C$ f = 13 MHz
Analog power supply current	During A/D and D/A conversion	AI_{CC}	—	0.3 (3.3 V)	2.0	mA	
	Idle		—	0.01	5.0	μA	
Reference current	During A/D and D/A conversion	AI_{CC}	—	1.6 (3.3 V)	3.0	mA	
	Idle		—	0.01	5.0	μA	
RAM standby voltage		V_{RAM}	2.0	—	—	V	

Notes: 1. If the A/D and D/A converters are not used, do not leave the AV_{CC}, AV_{SS}, and V_{ref} pins open. Connect AV_{CC} and V_{ref} to V_{CC}, and connect AV_{SS} to V_{SS}.
2. Current dissipation values are for V_{IH} min = V_{CC} –0.5 V and V_{IL} max = 0.5 V with all output pins unloaded and the on-chip pull-up transistors in the off state.
3. The values are for $V_{RAM} \leq V_{CC} < 3.0$ V, V_{IH} min = $V_{CC} \times 0.9$, and V_{IL} max = 0.3 V.
4. I_{CC} depends on V_{CC} and f as follows:
I_{CC} max = 1.0 (mA) + 1.1 (mA/(MHz × V)) × V_{CC} × f [normal mode]
I_{CC} max = 1.0 (mA) + 0.75 (mA/(MHz × V)) × V_{CC} × f [sleep mode]

Table 22-35 Permissible Output Currents

Conditions: V_{CC} = 3.0 to 5.5 V, AV_{CC} = 3.0 to 5.5 V, V_{ref} = 3.0 V to AV_{CC}, V_{SS} = AV_{SS} = 0 V, T_a = –20 to +75°C (regular specifications), T_a = –40 to +85°C (wide-range specifications)

Item		Symbol	Min	Typ	Max	Unit
Permissible output low current (per pin)	Ports 1, A to C	I_{OL}	—	—	10	mA
	Other output pins		—	—	2.0	mA
Permissible output low current (total)	Total of 32 pins including ports 1 and A to C	ΣI_{OL}	—	—	80	mA
	Total of all output pins, including the above		—	—	120	mA
Permissible output high current (per pin)	All output pins	$-I_{OH}$	—	—	2.0	mA
Permissible output high current (total)	Total of all output pins	$\Sigma -I_{OH}$	—	—	40	mA

Notes: 1. To protect chip reliability, do not exceed the output current values in table 22-35.
2. When driving a darlington pair or LED directly, always insert a current-limiting resistor in the output line, as show in figures 22-65 and 22-66.

22.7.3 AC Characteristics

(1) Clock Timing

Table 22-36 lists the clock timing

Table 22-36 Clock Timing

Condition B: V_{CC} = 5.0 V ± 10%, AV_{CC} = 5.0 V ± 10%, V_{ref} = 4.5 V to AV_{CC},
V_{SS} = AV_{SS} = 0 V, ø = 2 to 20 MHz, T_a = –20 to +75°C (regular specifications),
T_a = –40 to +85°C (wide-range specifications)

Condition C: V_{CC} = 3.0 to 5.5 V, AV_{CC} = 3.0 to 5.5 V, V_{ref} = 3.0 V to AV_{CC},
V_{SS} = AV_{SS} = 0 V, ø = 2 to 13 MHz, T_a = –20 to +75°C (regular specifications),
T_a = –40 to +85°C (wide-range specifications)

		Condition B		Condition C			
Item	**Symbol**	**Min**	**Max**	**Min**	**Max**	**Unit**	**Test Conditions**
Clock cycle time	t_{cyc}	50	500	76	500	ns	Figure 22-68
Clock high pulse width	t_{CH}	20	—	23	—	ns	
Clock low pulse width	t_{CL}	20	—	23	—	ns	
Clock rise time	t_{Cr}	—	5	—	15	ns	
Clock fall time	t_{Cf}	—	5	—	15	ns	
Clock oscillator setting time at reset (crystal)	t_{OSC1}	10	—	20	—	ms	Figure 22-69
Clock oscillator setting time in software standby (crystal)	t_{OSC2}	10	—	20	—	ms	Figure 21-2
External clock output stabilization delay time	t_{DEXT}	500	—	500	—	µs	Figure 22-69

(2) Control Signal Timing

Table 22-37 lists the control signal timing.

Table 22-37 Control Signal Timing

Condition B: V_{CC} = 5.0 V ± 10%, AV_{CC} = 5.0 V ± 10%, V_{ref} = 4.5 V to AV_{CC},
V_{SS} = AV_{SS} = 0 V, ø = 2 to 20 MHz, T_a = –20 to +75°C (regular specifications),
T_a = –40 to +85°C (wide-range specifications)

Condition C: V_{CC} = 3.0 to 5.5 V, AV_{CC} = 3.0 to 5.5 V, V_{ref} = 3.0 V to AV_{CC},
V_{SS} = AV_{SS} = 0 V, ø = 2 to 13 MHz, T_a = –20 to +75°C (regular specifications),
T_a = –40 to +85°C (wide-range specifications)

		Condition B		Condition C			
Item	**Symbol**	**Min**	**Max**	**Min**	**Max**	**Unit**	**Test Conditions**
$\overline{RES}$ setup time	t_{RESS}	200	—	200	—	ns	Figure 22-70
$\overline{RES}$ pulse width	t_{RESW}	20	—	20	—	t_{cyc}	
NMI setup time	t_{NMIS}	150	—	250	—	ns	Figure 22-71
NMI hold time	t_{NMIH}	10	—	10	—		
NMI pulse width (exiting software standby mode)	t_{NMIW}	200	—	200	—	ns	
$\overline{IRQ}$ setup time	t_{IRQS}	150	—	250	—	ns	
$\overline{IRQ}$ hold time	t_{IRQH}	10	—	10	—	ns	
$\overline{IRQ}$ pulse width (exiting software standby mode)	t_{IRQW}	200	—	200	—	ns	

(3) Bus Timing

Table 22-38 lists the bus timing.

Table 22-38 Bus Timing

Condition B: V_{CC} = 5.0 V ± 10%, AV_{CC} = 5.0 V ± 10%, V_{ref} = 4.5 V to AV_{CC},
V_{SS} = AV_{SS} = 0 V, ø= 2 to 20 MHz, T_a = –20 to +75°C (regular specifications),
T_a = –40 to +85°C (wide-range specifications)

Condition C: V_{CC} = 3.0 to 5.5 V, AV_{CC} = 3.0 to 5.5 V, V_{ref} = 3.0 V to AV_{CC},
V_{SS} = AV_{SS} = 0 V, ø = 2 to 13 MHz, T_a = –20 to +75°C (regular specifications),
T_a = –40 to +85°C (wide-range specifications)

		Condition B		Condition C			
Item	**Symbol**	**Min**	**Max**	**Min**	**Max**	**Unit**	**Test Conditions**
Address delay time	t_{AD}	—	20	—	40	ns	Figure 22-72 to Figure 22-79
Address setup time	t_{AS}	0.5 × t_{cyc} – 15	—	0.5 × t_{cyc} – 30	—	ns	
Address hold time	t_{AH}	0.5 × t_{cyc} – 10	—	0.5 × t_{cyc} – 20	—	ns	
Precharge time	t_{PCH}	1.5 × t_{cyc} – 20	—	1.5 × t_{cyc} – 40	—	ns	
$\overline{CS}$ delay time 1	t_{CSD1}	—	20	—	40	ns	
$\overline{CS}$ delay time 2	t_{CSD2}	—	20	—	40	ns	
$\overline{CS}$ delay time 3	t_{CSD3}	—	25	—	40	ns	
$\overline{AS}$ delay time	t_{ASD}	—	20	—	40	ns	
$\overline{RD}$ delay time 1	t_{RSD1}	—	20	—	40	ns	
$\overline{RD}$ delay time 2	t_{RSD2}	—	20	—	40	ns	
$\overline{CAS}$ delay time	t_{CASD}	—	20	—	40	ns	
Read data setup time	t_{RDS}	15	—	30	—	ns	
Read data hold time	t_{RDH}	0	—	0	—	ns	
Read data access time 1	t_{ACC1}	—	1.0 × t_{cyc} – 25	—	1.0 × t_{cyc} – 50	ns	
Read data access time 2	t_{ACC2}	—	1.5 × t_{cyc} – 25	—	1.5 × t_{cyc} – 50	ns	
Read data access time 3	t_{ACC3}	—	2.0 × t_{cyc} – 25	—	2.0 × t_{cyc} – 50	ns	
Read data access time 4	t_{ACC4}	—	2.5 × t_{cyc} – 25	—	2.5 × t_{cyc} – 50	ns	
Read data access time 5	t_{ACC5}	—	3.0 × t_{cyc} – 25	—	3.0 × t_{cyc} – 50	ns	
$\overline{WR}$ delay time 1	t_{WRD1}	—	20	—	40	ns	
$\overline{WR}$ delay time 2	t_{WRD2}	—	20	—	40	ns	
$\overline{WR}$ pulse width 1	t_{WSW1}	1.0 × t_{cyc} – 20	—	1.0 × t_{cyc} – 40	—	ns	
$\overline{WR}$ pulse width 2	t_{WSW2}	1.5 × t_{cyc} – 20	—	1.5 × t_{cyc} – 40	—	ns	

Item	Symbol	Condition B Min	Condition B Max	Condition C Min	Condition C Max	Unit	Test Conditions
Write data delay time	t_{WDD}	—	30	—	60	ns	Figure 22-72 to Figure 22-79
Write data setup time	t_{WDS}	$0.5 \times t_{cyc} - 20$	—	$0.5 \times t_{cyc} - 36$	—	ns	
Write data hold time	t_{WDH}	$0.5 \times t_{cyc} - 10$	—	$0.5 \times t_{cyc} - 20$	—	ns	
$\overline{WR}$ setup time	t_{WCS}	$0.5 \times t_{cyc} - 10$	—	$0.5 \times t_{cyc} - 20$	—	ns	
$\overline{WR}$ hold time	t_{WCH}	$0.5 \times t_{cyc} - 10$	—	$0.5 \times t_{cyc} - 20$	—	ns	
$\overline{CAS}$ setup time	t_{CSR}	$0.5 \times t_{cyc} - 10$	—	$0.5 \times t_{cyc} - 20$	—	ns	Figure 22-76
$\overline{WAIT}$ setup time	t_{WTS}	30	—	60	—	ns	Figure 22-74
$\overline{WAIT}$ hold time	t_{WTH}	5	—	10	—	ns	
$\overline{BREQ}$ setup time	t_{BRQS}	30	—	60	—	ns	Figure 22-80
$\overline{BACK}$ delay time	t_{BACD}	—	15	—	30	ns	
Bus-floating time	t_{BZD}	—	50	—	100	ns	
$\overline{BREQO}$ delay time	t_{BRQOD}	—	30	—	60	ns	Figure 22-81

(4) DMAC Timing

Table 22-39 lists the DMAC timing.

Table 22-39 DMAC Timing

Condition B: V_{CC} = 5.0 V ± 10%, AV_{CC} = 5.0 V ± 10%, V_{ref} = 4.5 V to AV_{CC}, V_{SS} = AV_{SS} = 0 V, ø = 2 to 20 MHz, T_a = –20 to +75°C (regular specifications), T_a = –40 to +85°C (wide-range specifications)

Condition C: V_{CC} = 3.0 V to 5.5 V, AV_{CC} = 3.0 V to 5.5 V, V_{ref} = 3.0 V to AV_{CC}, V_{SS} = AV_{SS} = 0V, ø = 2 to 13 MHz, T_a = –20 to +75°C (regular specifications), T_a = –40 to +85°C (wide-range specifications)

Item	Symbol	Condition B Min	Condition B Max	Condition C Min	Condition C Max	Unit	Test Conditions
$\overline{DREQ}$ setup time	t_{DRQS}	30	—	40	—	ns	Figure 22-85
$\overline{DREQ}$ hold time	t_{DRQH}	10	—	10	—		
$\overline{TEND}$ delay time	t_{TED}	—	20	—	40		Figure 22-84
$\overline{DACK}$ delay time 1	t_{DACD1}	—	20	—	40	ns	Figure 22-82
$\overline{DACK}$ delay time 2	t_{DACD2}	—	20	—	40		Figure 22-83

(5) Timing of On-Chip Supporting Modules

Table 22-40 lists the timing of on-chip supporting modules.

Table 22-40 Timing of On-Chip Supporting Modules

Condition B: V_{CC} = 5.0 V ± 10%, AV_{CC} = 5.0 V ± 10%, V_{ref} = 4.5 V to AV_{CC},
V_{SS} = AV_{SS} = 0 V, ø = 2 to 20 MHz, T_a = –20 to +75°C (regular specifications),
T_a = –40 to +85°C (wide-range specifications)

Condition C: V_{CC} = 3.0 V to 5.5 V, AV_{CC} = 3.0 V to 5.5 V, V_{ref} = 3.0 V to AV_{CC},
V_{SS} = AV_{SS} = 0 V, ø = 2 to 13 MHz, T_a = –20 to +75°C (regular specifications),
T_a = –40 to +85°C (wide-range specifications)

Item			Symbol	Condition B Min	Condition B Max	Condition C Min	Condition C Max	Unit	Test Conditions
PORT	Output data delay time		t_{PWD}	—	50	—	75	ns	Figure 22-86
	Input data setup time		t_{PRS}	30	—	50	—		
	Input data hold time		t_{PRH}	30	—	50	—		
PPG	Pulse output delay time		t_{POD}	—	50	—	75	ns	Figure 22-87
TPU	Timer output delay time		t_{TOCD}	—	50	—	75	ns	Figure 22-88
	Timer input setup time		t_{TICS}	30	—	50	—		
	Timer clock input setup time		t_{TCKS}	30	—	50	—	ns	Figure 22-89
	Timer clock pulse width	Single edge	t_{TCKWH}	1.5	—	1.5	—	t_{cyc}	
		Both edges	t_{TCKWL}	2.5	—	2.5	—		
TMR	Timer output delay time		t_{TMOD}	—	50	—	75	ns	Figure 22-90
	Timer reset input setup time		t_{TMRS}	30	—	50	—	ns	Figure 22-92
	Timer clock input setup time		t_{TMCS}	30	—	50	—	ns	Figure 22-91
	Timer clock pulse width	Single edge	t_{TMCWH}	1.5	—	1.5	—	t_{cyc}	
		Both edges	t_{TMCWL}	2.5	—	2.5	—		
SCI	Input clock cycle	Asynchro-nous	t_{Scyc}	4	—	4	—	t_{cyc}	Figure 22-94
		Synchro-nous		6	—	6	—		
	Input clock pulse width		t_{SCKW}	0.4	0.6	0.4	0.6	t_{Scyc}	
	Input clock rise time		t_{SCKr}	—	1.5	—	1.5	t_{cyc}	
	Input clock fall time		t_{SCKf}	—	1.5	—	1.5		

Item		Symbol	Condition B Min	Condition B Max	Condition C Min	Condition C Max	Unit	Test Conditions
SCI	Transmit data delay time	t_{TXD}	—	50	—	75	ns	Figure 22-95
	Receive data setup time (synchronous)	t_{RXS}	50	—	75	—	ns	
	Receive data hold time (synchronous)	t_{RXH}	50	—	75	—	ns	
A/D converter	Trigger input setup time	t_{TRGS}	30	—	50	—	ns	Figure 22-96

22.7.4 A/D Conversion Characteristics

Table 22-41 lists the A/D conversion characteristics.

Table 22-41 A/D Conversion Characteristics

Condition B: $V_{CC} = AV_{CC} = 5.0$ V ± 10%, $V_{ref} = 4.5$ V to AV_{CC}, $V_{SS} = AV_{SS} = 0$ V, ø = 2 to 20 MHz, T_a = –20 to +75°C (regular specifications), T_a = –40 to +85°C (wide-range specifications)

Condition C: $V_{CC} = AV_{CC} = 3.0$ V to 5.5 V, $V_{ref} = 3.0$ V to AV_{CC}, $V_{SS} = AV_{SS} = 0$ V, ø = 2 to 13 MHz, T_a = –20 to +75°C (regular specifications), T_a = –40 to +85°C (wide-range specifications)

Item	Condition B Min	Condition B Typ	Condition B Max	Condition C Min	Condition C Typ	Condition C Max	Unit
Resolution	10	10	10	10	10	10	bits
Conversion time	6.7	—	—	10.4	—	—	µs
Analog input capacitance	—	—	20	—	—	20	pF
Permissible signal-source impedance	—	—	10*[3]	—	—	10*[1]	kΩ
	—	—	5*[4]	—	—	5*[2]	
Nonlinearity error	—	—	±3.5	—	—	±7.5	LSB
Offset error	—	—	±3.5	—	—	±7.5	LSB
Full-scale error	—	—	±3.5	—	—	±7.5	LSB
Quantization	—	—	±0.5	—	—	±0.5	LSB
Absolute accuracy	—	—	±4.0	—	—	±8.0	LSB

Notes:
1. $4.0 \text{ V} \le AV_{CC} \le 5.5$ V
2. $3.0 \text{ V} \le AV_{CC} < 4.0$ V
3. ø ≤ 12 MHz
4. ø > 12 MHz

22.7.5 D/A Conversion Characteristics

Table 22-42 lists the D/A conversion characteristics

Table 22-42 D/A Conversion Characteristics

Condition B: $V_{CC} = AV_{CC} = 5.0$ V ± 10%, $V_{ref} = 4.5$ V to AV_{CC}, $V_{SS} = AV_{SS} = 0$ V,
ø = 2 to 20 MHz, T_a = –20 to +75°C (regular specifications),
T_a = –40 to +85°C (wide-range specifications)

Condition C: $V_{CC} = AV_{CC} = 3.0$ V to 5.5 V, $V_{ref} = 3.0$ V to AV_{CC},
$V_{SS} = AV_{SS} = 0$ V, ø = 2 to 13 MHz, T_a = –20 to +75°C (regular specifications),
T_a = –40 to +85°C (wide-range specifications)

	Condition B			Condition C				
Item	**Min**	**Typ**	**Max**	**Min**	**Typ**	**Max**	**Unit**	**Test Conditions**
Resolution	8	8	8	8	8	8	bit	
Conversion time	—	—	10	—	—	10	µs	20-pF capacitive load
Absolute accuracy	—	±1.0	±1.5	—	±2.0	±3.0	LSB	2-MΩ resistive load
	—	—	±1.0	—	—	±2.0	LSB	4-MΩ resistive load

22.7.6 Flash Memory Characteristics

Table 22-43 shows the flash memory characteristics.

Table 22-43 Flash Memory Characteristics (1)

Conditions: $V_{CC} = 5.0$ V ± 10%, $AV_{CC} = 5.0$ V ± 10%, $V_{ref} = 4.5$ V to AV_{CC}, $V_{SS} = AV_{SS} = 0$V
T_a = 0 to +75°C (Programming/erasing operating temperature, regular specifications), T_a = 0 to + 85°C (Programming/erasing operating temperature, wide-range specifications)

Item		**Symbol**	**Min**	**Typ**	**Max**	**Unit**	**Test Condition**
Programming time*1*2*4		t_P	—	10	200	ms/32 bytes	
Erase time*1*3*5		t_E	—	100	1200	ms/block	
Reprogramming count		N_{WEC}	—	—	100	Times	
Programming	Wait time after SWE bit setting*1	x	10	—	—	µs	
	Wait time after PSU bit setting*1	y	50	—	—	µs	
	Wait time after P bit setting*1*4	z	150	—	200	µs	
	Wait time after P bit clear*1	α	10	—	—	µs	
	Wait time after PSU bit clear*1	β	10	—	—	µs	
	Wait time after PV bit setting*1	γ	4	—	—	µs	
	Wait time after H'FF dummy write*1	ε	2	—	—	µs	

Item		Symbol	Min	Typ	Max	Unit	Test Condition
Programming	Wait time after PV bit clear*1	η	4	—	—	μs	
	Maximum programming count*1*4	N	—	—	1000*5	Times	z = 200 μs
Erase	Wait time after SWE bit setting*1	x	10	—	—	μs	
	Wait time after ESU bit setting*1	y	200	—	—	μs	
	Wait time after E bit setting*1*6	z	5	—	10	ms	
	Wait time after E bit clear*1	α	10	—	—	μs	
	Wait time after ESU bit clear*1	β	10	—	—	μs	
	Wait time after EV bit setting*1	γ	20	—	—	μs	
	Wait time after H'FF dummy write*1	ε	2	—	—	μs	
	Wait time after EV bit clear*1	η	5	—	—	μs	
	Maximum erase count*1*6	N	120	—	240	Times	

Notes: 1. Set the times according to the program/erase algorithms.
2. Programming time per 32 bytes (Shows the total time the flash memory control register 1 (FLMCR1) is set. It does not include the programming verification time.)
3. Block erase time (Shows the period the E bit in FLMCR1 is set. It does not include the erase verification time.)
4. Maximum programming time
(t_p (max)=wait time after P-bit setting (z) × maximum programming count (N))
5. Number of times when the wait time after P bit setting (z) = 200 μs.
The maximum number of writes (N) should be set according to the actual set value of z so as not to exceed the maximum programming time (t_P(max)).
6. For the maximum erase time (t_E(max)), the following relationship applies between the wait time after E bit setting (z) and the maximum number of erases (N):
t_E(max) = Wait time after E bit setting (z) × maximum number of erases (N)
The values of z and N should be set so as to satisfy the above formula.
Examples: When z = 5 [ms], N = 240 times
When z = 10 [ms], N = 120 times

Table 22-43 shows the flash memory characteristics.

Table 22-43 Flash Memory Characteristics (2)

Conditions: V_{CC} = 3.0 to 3.6 V, AV_{CC} = 3.0 to 3.6 V, V_{ref} = 3.0 V to AV_{CC}, V_{SS}=AV_{SS}=0V
T_a=0 to +75°C (Programming/erasing operating temperature, regular specifications), T_a=0 to +85°C (Programming/erasing operating temperature, wide-range specifications)

Item	Symbol	Min	Typ	Max	Unit	Test Condition
Programming time*1*2*4	t_P	—	10	200	ms/32 bytes	
Erase time*1*3*5	t_E	—	100	1200	ms/block	
Reprogramming count	N_{WEC}	—	—	100	Times	

Item		Symbol	Min	Typ	Max	Unit	Test Condition
Programming	Wait time after SWE bit setting*1	x	10	—	—	μs	
	Wait time after PSU bit setting*1	y	50	—	—	μs	
	Wait time after P bit setting*1*4	z	150	—	200	μs	
	Wait time after P bit clear*1	α	10	—	—	μs	
	Wait time after PSU bit clear*1	β	10	—	—	μs	
	Wait time after PV bit setting*1	γ	4	—	—	μs	
	Wait time after H'FF dummy write*1	ε	2	—	—	μs	
	Wait time after PV bit clear*1	η	4	—	—	μs	
	Maximum programming count*1*4	N	—	—	1000 *5	Times	Z = 200 μs
Erase	Wait time after SWE bit setting*1	x	10	—	—	μs	
	Wait time after ESU bit setting*1	y	200	—	—	μs	
	Wait time after E bit setting*1*6	z	5	—	10	ms	
	Wait time after E bit clear*1	α	10	—	—	μs	
	Wait time after ESU bit clear*1	β	10	—	—	μs	
	Wait time after EV bit setting*1	γ	20	—	—	μs	
	Wait time after H'FF dummy write*1	ε	2	—	—	μs	
	Wait time after EV bit clear*1	η	5	—	—	μs	
	Maximum erase count*1*6	N	120	—	240	Times	

Notes: 1. Set the times according to the program/erase algorithms.

2. Programming time per 32 bytes (Shows the total time the flash memory control register (FLMCR) is set. It does not include the programming verification time.)

3. Block erase time (Shows the period the E bit in FLMCR is set. It does not include the erase verification time.)

4. Maximum programming time
(t_p (max)=wait time after P-bit setting (Z) × maximum programming count (N))

5. Number of times when the wait time after P bit setting (z) = 200 μs.
The maximum number of writes (N) should be set according to the actual set value of z so as not to exceed the maximum programming time (t_P(max)).

6. For the maximum erase time (t_E(max)), the following relationship applies between the wait time after E bit setting (z) and the maximum number of erases (N):
t_E(max) = Wait time after E bit setting (z) × maximum number of erases (N)
The values of z and N should be set so as to satisfy the above formula.
Examples: When z = 5 [ms], N = 240 times
When z = 10 [ms], N = 120 times

22.8 Usage Note

Although the ZTAT, F-ZTAT, and masked ROM versions fully meet the electrical specifications listed in this manual, due to differences in the fabrication process, the on-chip ROM, and the layout patterns, there will be differences in the actual values of the electrical characteristics, the operating margins, the noise margins, and other aspects.

Therefore, if a system is evaluated using the ZTAT and F-ZTAT versions, a similar evaluation should also be performed using the masked ROM version.

Appendix A Instruction Set

A.1 Instruction List

Operand Notation

Rd	General register (destination)*[1]
Rs	General register (source)*[1]
Rn	General register*[1]
ERn	General register (32-bit register)
MAC	Multiply-and-accumulate register (32-bit register)*[2]
(EAd)	Destination operand
(EAs)	Source operand
EXR	Extended control register
CCR	Condition-code register
N	N (negative) flag in CCR
Z	Z (zero) flag in CCR
V	V (overflow) flag in CCR
C	C (carry) flag in CCR
PC	Program counter
SP	Stack pointer
#IMM	Immediate data
disp	Displacement
+	Add
–	Subtract
×	Multiply
÷	Divide
∧	Logical AND
∨	Logical OR
⊕	Logical exclusive OR
→	Transfer from the operand on the left to the operand on the right, or transition from the state on the left to the state on the right
¬	Logical NOT (logical complement)
( ) < >	Contents of operand
:8/:16/:24/:32	8-, 16-, 24-, or 32-bit length

Notes: 1. General registers include 8-bit registers (R0H to R7H, R0L to R7L), 16-bit registers (R0 to R7, E0 to E7), and 32-bit registers (ER0 to ER7).

2. The MAC register cannot be used in the H8S/2357 Group.

Condition Code Notation

Symbol	
↕	Changes according to the result of instruction
*	Undetermined (no guaranteed value)
0	Always cleared to 0
1	Always set to 1
—	Not affected by execution of the instruction

Table A-1 Instruction Set

(1) Data Transfer Instructions

Mnemonic		Operand Size	Addressing Mode/ Instruction Length (Bytes) #xx	Rn	@ERn	@(d,ERn)	@–ERn/@ERn+	@aa	@(d,PC)	@@aa	—	Operation	Condition Code I	H	N	Z	V	C	No. of States*1 Advanced
MOV	MOV.B #xx:8,Rd	B	2									#xx:8→Rd8	—	—	↕	↕	0	—	1
	MOV.B Rs,Rd	B		2								Rs8→Rd8	—	—	↕	↕	0	—	1
	MOV.B @ERs,Rd	B			2							@ERs→Rd8	—	—	↕	↕	0	—	2
	MOV.B @(d:16,ERs),Rd	B				4						@(d:16,ERs)→Rd8	—	—	↕	↕	0	—	3
	MOV.B @(d:32,ERs),Rd	B				8						@(d:32,ERs)→Rd8	—	—	↕	↕	0	—	5
	MOV.B @ERs+,Rd	B					2					@ERs→Rd8,ERs32+1→ERs32	—	—	↕	↕	0	—	3
	MOV.B @aa:8,Rd	B						2				@aa:8→Rd8	—	—	↕	↕	0	—	2
	MOV.B @aa:16,Rd	B						4				@aa:16→Rd8	—	—	↕	↕	0	—	3
	MOV.B @aa:32,Rd	B						6				@aa:32→Rd8	—	—	↕	↕	0	—	4
	MOV.B Rs,@ERd	B			2							Rs8→@ERd	—	—	↕	↕	0	—	2
	MOV.B Rs,@(d:16,ERd)	B				4						Rs8→@(d:16,ERd)	—	—	↕	↕	0	—	3
	MOV.B Rs,@(d:32,ERd)	B				8						Rs8→@(d:32,ERd)	—	—	↕	↕	0	—	5
	MOV.B Rs,@-ERd	B					2					ERd32-1→ERd32,Rs8→@ERd	—	—	↕	↕	0	—	3
	MOV.B Rs,@aa:8	B						2				Rs8→@aa:8	—	—	↕	↕	0	—	2
	MOV.B Rs,@aa:16	B						4				Rs8→@aa:16	—	—	↕	↕	0	—	3
	MOV.B Rs,@aa:32	B						6				Rs8→@aa:32	—	—	↕	↕	0	—	4
	MOV.W #xx:16,Rd	W	4									#xx:16→Rd16	—	—	↕	↕	0	—	2
	MOV.W Rs,Rd	W		2								Rs16→Rd16	—	—	↕	↕	0	—	1
	MOV.W @ERs,Rd	W			2							@ERs→Rd16	—	—	↕	↕	0	—	2

Mnemonic		Operand Size	Addressing Mode/ Instruction Length (Bytes) #xx	Rn	@ERn	@(d,ERn)	@–ERn/@ERn+	@aa	@(d,PC)	@@aa	—	Operation	Condition Code I	H	N	Z	V	C	No. of States*1 Advanced
MOV	MOV.W @(d:16,ERs),Rd	W				4						@(d:16,ERs)→Rd16	—	—	↕	↕	0	—	3
	MOV.W @(d:32,ERs),Rd	W				8						@(d:32,ERs)→Rd16	—	—	↕	↕	0	—	5
	MOV.W @ERs+,Rd	W					2					@ERs→Rd16,ERs32+2→ERs32	—	—	↕	↕	0	—	3
	MOV.W @aa:16,Rd	W						4				@aa:16→Rd16	—	—	↕	↕	0	—	3
	MOV.W @aa:32,Rd	W						6				@aa:32→Rd16	—	—	↕	↕	0	—	4
	MOV.W Rs,@ERd	W			2							Rs16→@ERd	—	—	↕	↕	0	—	2
	MOV.W Rs,@(d:16,ERd)	W				4						Rs16→@(d:16,ERd)	—	—	↕	↕	0	—	3
	MOV.W Rs,@(d:32,ERd)	W				8						Rs16→@(d:32,ERd)	—	—	↕	↕	0	—	5
	MOV.W Rs,@-ERd	W					2					ERd32-2→ERd32,Rs16→@ERd	—	—	↕	↕	0	—	3
	MOV.W Rs,@aa:16	W						4				Rs16→@aa:16	—	—	↕	↕	0	—	3
	MOV.W Rs,@aa:32	W						6				Rs16→@aa:32	—	—	↕	↕	0	—	4
	MOV.L #xx:32,ERd	L	6									#xx:32→ERd32	—	—	↕	↕	0	—	3
	MOV.L ERs,ERd	L		2								ERs32→ERd32	—	—	↕	↕	0	—	1
	MOV.L @ERs,ERd	L			4							@ERs→ERd32	—	—	↕	↕	0	—	4
	MOV.L @(d:16,ERs),ERd	L				6						@(d:16,ERs)→ERd32	—	—	↕	↕	0	—	5
	MOV.L @(d:32,ERs),ERd	L				10						@(d:32,ERs)→ERd32	—	—	↕	↕	0	—	7
	MOV.L @ERs+,ERd	L					4					@ERs→ERd32,ERs32+4→@ERs32	—	—	↕	↕	0	—	5
	MOV.L @aa:16,ERd	L						6				@aa:16→ERd32	—	—	↕	↕	0	—	5
	MOV.L @aa:32,ERd	L						8				@aa:32→ERd32	—	—	↕	↕	0	—	6

Mnemonic		Operand Size	Addressing Mode/ Instruction Length (Bytes) #xx	Rn	@ERn	@(d,ERn)	@–ERn/@ERn+	@aa	@(d,PC)	@@aa	—	Operation	Condition Code I	H	N	Z	V	C	No. of States*1 Advanced
MOV	MOV.L ERs,@ERd	L			4							ERs32→@ERd	—	—	↕	↕	0	—	4
	MOV.L ERs,@(d:16,ERd)	L				6						ERs32→@(d:16,ERd)	—	—	↕	↕	0	—	5
	MOV.L ERs,@(d:32,ERd)	L				10						ERs32→@(d:32,ERd)	—	—	↕	↕	0	—	7
	MOV.L ERs,@-ERd	L					4					ERd32-4→ERd32,ERs32→@ERd	—	—	↕	↕	0	—	5
	MOV.L ERs,@aa:16	L						6				ERs32→@aa:16	—	—	↕	↕	0	—	5
	MOV.L ERs,@aa:32	L						8				ERs32→@aa:32	—	—	↕	↕	0	—	6
POP	POP.W Rn	W									2	@SP→Rn16,SP+2→SP	—	—	↕	↕	0	—	3
	POP.L ERn	L									4	@SP→ERn32,SP+4→SP	—	—	↕	↕	0	—	5
PUSH	PUSH.W Rn	W									2	SP-2→SP,Rn16→@SP	—	—	↕	↕	0	—	3
	PUSH.L ERn	L									4	SP-4→SP,ERn32→@SP	—	—	↕	↕	0	—	5
LDM	LDM @SP+,(ERm-ERn)	L									4	(@SP→ERn32,SP+4→SP) Repeated for each register restored	—	—	—	—	—	—	7/9/11 [1]
STM	STM (ERm-ERn),@-SP	L									4	(SP-4→SP,ERn32→@SP) Repeated for each register saved	—	—	—	—	—	—	7/9/11 [1]
MOVFPE	MOVFPE @aa:16,Rd	Cannot be used in the H8S/2357 Group																	[2]
MOVTPE	MOVTPE Rs,@aa:16	Cannot be used in the H8S/2357 Group																	[2]

(2) Arithmetic Instructions

Mnemonic		Operand Size	Addressing Mode/ Instruction Length (Bytes) #xx	Rn	@ERn	@(d,ERn)	@–ERn/@ERn+	@aa	@(d,PC)	@@aa	—	Operation	Condition Code I	H	N	Z	V	C	No. of States*1 Advanced
ADD	ADD.B #xx:8,Rd	B	2									Rd8+#xx:8→Rd8	—	↕	↕	↕	↕	↕	1
	ADD.B Rs,Rd	B		2								Rd8+Rs8→Rd8	—	↕	↕	↕	↕	↕	1
	ADD.W #xx:16,Rd	W	4									Rd16+#xx:16→Rd16	—	[3]	↕	↕	↕	↕	2
	ADD.W Rs,Rd	W		2								Rd16+Rs16→Rd16	—	[3]	↕	↕	↕	↕	1
	ADD.L #xx:32,ERd	L	6									ERd32+#xx:32→ERd32	—	[4]	↕	↕	↕	↕	3
	ADD.L ERs,ERd	L		2								ERd32+ERs32→ERd32	—	[4]	↕	↕	↕	↕	1
ADDX	ADDX #xx:8,Rd	B	2									Rd8+#xx:8+C→Rd8	—	↕	↕	[5]	↕	↕	1
	ADDX Rs,Rd	B		2								Rd8+Rs8+C→Rd8	—	↕	↕	[5]	↕	↕	1
ADDS	ADDS #1,ERd	L		2								ERd32+1→ERd32	—	—	—	—	—	—	1
	ADDS #2,ERd	L		2								ERd32+2→ERd32	—	—	—	—	—	—	1
	ADDS #4,ERd	L		2								ERd32+4→ERd32	—	—	—	—	—	—	1
INC	INC.B Rd	B		2								Rd8+1→Rd8	—	—	↕	↕	↕	—	1
	INC.W #1,Rd	W		2								Rd16+1→Rd16	—	—	↕	↕	↕	—	1
	INC.W #2,Rd	W		2								Rd16+2→Rd16	—	—	↕	↕	↕	—	1
	INC.L #1,ERd	L		2								ERd32+1→ERd32	—	—	↕	↕	↕	—	1
	INC.L #2,ERd	L		2								ERd32+2→ERd32	—	—	↕	↕	↕	—	1
DAA	DAA Rd	B		2								Rd8 decimal adjust→Rd8	—	*	↕	↕	*	↕	1
SUB	SUB.B Rs,Rd	B		2								Rd8-Rs8→Rd8	—	↕	↕	↕	↕	↕	1
	SUB.W #xx:16,Rd	W	4									Rd16-#xx:16→Rd16	—	[3]	↕	↕	↕	↕	2

Mnemonic		Operand Size	Addressing Mode/ Instruction Length (Bytes) #xx	Rn	@ERn	@(d,ERn)	@–ERn/@ERn+	@aa	@(d,PC)	@@aa	—	Operation	Condition Code I	H	N	Z	V	C	No. of States*1 Advanced
SUB	SUB.W Rs,Rd	W		2								Rd16-Rs16→Rd16	—	[3]	↕	↕	↕	↕	1
	SUB.L #xx:32,ERd	L	6									ERd32-#xx:32→ERd32	—	[4]	↕	↕	↕	↕	3
	SUB.L ERs,ERd	L		2								ERd32-ERs32→ERd32	—	[4]	↕	↕	↕	↕	1
SUBX	SUBX #xx:8,Rd	B	2									Rd8-#xx:8-C→Rd8	—	↕	↕	[5]	↕	↕	1
	SUBX Rs,Rd	B		2								Rd8-Rs8-C→Rd8	—	↕	↕	[5]	↕	↕	1
SUBS	SUBS #1,ERd	L		2								ERd32-1→ERd32	—	—	—	—	—	—	1
	SUBS #2,ERd	L		2								ERd32-2→ERd32	—	—	—	—	—	—	1
	SUBS #4,ERd	L		2								ERd32-4→ERd32	—	—	—	—	—	—	1
DEC	DEC.B Rd	B		2								Rd8-1→Rd8	—	—	↕	↕	↕	—	1
	DEC.W #1,Rd	W		2								Rd16-1→Rd16	—	—	↕	↕	↕	—	1
	DEC.W #2,Rd	W		2								Rd16-2→Rd16	—	—	↕	↕	↕	—	1
	DEC.L #1,ERd	L		2								ERd32-1→ERd32	—	—	↕	↕	↕	—	1
	DEC.L #2,ERd	L		2								ERd32-2→ERd32	—	—	↕	↕	↕	—	1
DAS	DAS Rd	B		2								Rd8 decimal adjust→Rd8	—	*	↕	↕	*	—	1
MULXU	MULXU.B Rs,Rd	B		2								Rd8×Rs8→Rd16 (unsigned multiplication)	—	—	—	—	—	—	12
	MULXU.W Rs,ERd	W		2								Rd16×Rs16→ERd32 (unsigned multiplication)	—	—	—	—	—	—	20
MULXS	MULXS.B Rs,Rd	B		4								Rd8×Rs8→Rd16 (signed multiplication)	—	—	↕	↕	—	—	13
	MULXS.W Rs,ERd	W		4								Rd16×Rs16→ERd32 (signed multiplication)	—	—	↕	↕	—	—	21

Mnemonic		Operand Size	Addressing Mode/ Instruction Length (Bytes) #xx	Rn	@ERn	@(d,ERn)	@–ERn/@ERn+	@aa	@(d,PC)	@@aa	—	Operation	Condition Code I	H	N	Z	V	C	No. of States*1 Advanced
DIVXU	DIVXU.B Rs,Rd	B		2								Rd16÷Rs8→Rd16 (RdH: remainder, RdL: quotient) (unsigned division)	—	—	[6]	[7]	—	—	12
	DIVXU.W Rs,ERd	W		2								ERd32÷Rs16→ERd32 (Ed: remainder, Rd: quotient) (unsigned division)	—	—	[6]	[7]	—	—	20
DIVXS	divxs.B Rs,Rd	B		4								Rd16÷Rs8→Rd16 (RdH: remainder, RdL: quotient) (signed division)	—	—	[8]	[7]	—	—	13
	DIVXS.W Rs,ERd	W		4								ERd32÷Rs16→ERd32 (Ed: remainder, Rd: quotient) (signed division)	—	—	[8]	[7]	—	—	21
CMP	CMP.B #xx:8,Rd	B	2									Rd8-#xx:8	—	↕	↕	↕	↕	↕	1
	CMP.B Rs,Rd	B		2								Rd8-Rs8	—	↕	↕	↕	↕	↕	1
	CMP.W #xx:16,Rd	W	4									Rd16-#xx:16	—	[3]	↕	↕	↕	↕	2
	CMP.W Rs,Rd	W		2								Rd16-Rs16	—	[3]	↕	↕	↕	↕	1
	CMP.L #xx:32,ERd	L	6									ERd32-#xx:32	—	[4]	↕	↕	↕	↕	3
	CMP.L ERs,ERd	L		2								ERd32-ERs32	—	[4]	↕	↕	↕	↕	1
NEG	NEG.B Rd	B		2								0-Rd8→Rd8	—	↕	↕	↕	↕	↕	1
	NEG.W Rd	W		2								0-Rd16→Rd16	—	↕	↕	↕	↕	↕	1
	NEG.L ERd	L		2								0-ERd32→ERd32	—	↕	↕	↕	↕	↕	1
EXTU	EXTU.W Rd	W		2								0→(<bit 15 to 8> of Rd16)	—	—	0	↕	0	—	1
	EXTU.L ERd	L		2								0→(<bit 31 to 16> of ERd32)	—	—	0	↕	0	—	1

Mnemonic		Operand Size	Addressing Mode/ Instruction Length (Bytes) #xx	Rn	@ERn	@(d,ERn)	@–ERn/@ERn+	@aa	@(d,PC)	@@aa	—	Operation	Condition Code I	H	N	Z	V	C	No. of States*1 Advanced
EXTS	EXTS.W Rd	W		2								(<bit 7> of Rd16)→ (<bit 15 to 8> of Rd16)	—	—	↕	↕	0	—	1
	EXTS.L ERd	L		2								(<bit 15> of ERd32)→ (<bit 31 to 16> of ERd32)	—	—	↕	↕	0	—	1
TAS	TAS @ERd*3	B			4							@ERd-0→CCR set, (1)→ (<bit 7> of @ERd)	—	—	↕	↕	0	—	4
MAC	MAC @ERn+, @ERm+	Cannot be used in the H8S/2357 Group																	[2]
CLRMAC	CLRMAC																		
LDMAC	LDMAC ERs,MACH																		
	LDMAC ERs,MACL																		
STMAC	STMAC MACH,ERd																		
	STMAC MACL,ERd																		

(3) Logical Instructions

	Mnemonic	Operand Size	Addressing Mode/ Instruction Length (Bytes) #xx	Rn	@ERn	@(d,ERn)	@–ERn/@ERn+	@aa	@(d,PC)	@@aa	—	Operation	Condition Code I	H	N	Z	V	C	No. of States*1 Advanced
AND	AND.B #xx:8,Rd	B	2									Rd8∧#xx:8→Rd8	—	—	↕	↕	0	—	1
	AND.B Rs,Rd	B		2								Rd8∧Rs8→Rd8	—	—	↕	↕	0	—	1
	AND.W #xx:16,Rd	W	4									Rd16∧#xx:16→Rd16	—	—	↕	↕	0	—	2
	AND.W Rs,Rd	W		2								Rd16∧Rs16→Rd16	—	—	↕	↕	0	—	1
	AND.L #xx:32,ERd	L	6									ERd32∧#xx:32→ERd32	—	—	↕	↕	0	—	3
	AND.L ERs,ERd	L		4								ERd32∧ERs32→ERd32	—	—	↕	↕	0	—	2
OR	OR.B #xx:8,Rd	B	2									Rd8∨#xx:8→Rd8	—	—	↕	↕	0	—	1
	OR.B Rs,Rd	B		2								Rd8∨Rs8→Rd8	—	—	↕	↕	0	—	1
	OR.W #xx:16,Rd	W	4									Rd16∨#xx:16→Rd16	—	—	↕	↕	0	—	2
	OR.W Rs,Rd	W		2								Rd16∨Rs16→Rd16	—	—	↕	↕	0	—	1
	OR.L #xx:32,ERd	L	6									ERd32∨#xx:32→ERd32	—	—	↕	↕	0	—	3
	OR.L ERs,ERd	L		4								ERd32∨ERs32→ERd32	—	—	↕	↕	0	—	2
XOR	XOR.B #xx:8,Rd	B	2									Rd8⊕#xx:8→Rd8	—	—	↕	↕	0	—	1
	XOR.B Rs,Rd	B		2								Rd8⊕Rs8→Rd8	—	—	↕	↕	0	—	1
	XOR.W #xx:16,Rd	W	4									Rd16⊕#xx:16→Rd16	—	—	↕	↕	0	—	2
	XOR.W Rs,Rd	W		2								Rd16⊕Rs16→Rd16	—	—	↕	↕	0	—	1
	XOR.L #xx:32,ERd	L	6									ERd32⊕#xx:32→ERd32	—	—	↕	↕	0	—	3
	XOR.L ERs,ERd	L		4								ERd32⊕ERs32→ERd32	—	—	↕	↕	0	—	2
NOT	NOT.B Rd	B		2								¬ Rd8→Rd8	—	—	↕	↕	0	—	1
	NOT.W Rd	W		2								¬ Rd16→Rd16	—	—	↕	↕	0	—	1
	NOT.L ERd	L		2								¬ ERd32→ERd32	—	—	↕	↕	0	—	1

(4) Shift Instructions

Mnemonic		Operand Size	Addressing Mode/ Instruction Length (Bytes) #xx	Rn	@ERn	@(d,ERn)	@–ERn/@ERn+	@aa	@(d,PC)	@@aa	—	Operation	Condition Code I	H	N	Z	V	C	No. of States*1 Advanced
SHAL	SHAL.B Rd	B		2								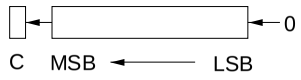	—	—	↕	↕	↕	↕	1
	SHAL.B #2,Rd	B		2									—	—	↕	↕	↕	↕	1
	SHAL.W Rd	W		2									—	—	↕	↕	↕	↕	1
	SHAL.W #2,Rd	W		2									—	—	↕	↕	↕	↕	1
	SHAL.L ERd	L		2									—	—	↕	↕	↕	↕	1
	SHAL.L #2,ERd	L		2									—	—	↕	↕	↕	↕	1
SHAR	SHAR.B Rd	B		2								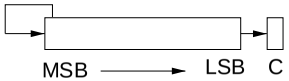	—	—	↕	↕	0	↕	1
	SHAR.B #2,Rd	B		2									—	—	↕	↕	0	↕	1
	SHAR.W Rd	W		2									—	—	↕	↕	0	↕	1
	SHAR.W #2,Rd	W		2									—	—	↕	↕	0	↕	1
	SHAR.L ERd	L		2									—	—	↕	↕	0	↕	1
	SHAR.L #2,ERd	L		2									—	—	↕	↕	0	↕	1
SHLL	SHLL.B Rd	B		2								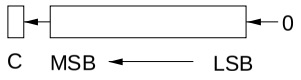	—	—	↕	↕	0	↕	1
	SHLL.B #2,Rd	B		2									—	—	↕	↕	0	↕	1
	SHLL.W Rd	W		2									—	—	↕	↕	0	↕	1
	SHLL.W #2,Rd	W		2									—	—	↕	↕	0	↕	1
	SHLL.L ERd	L		2									—	—	↕	↕	0	↕	1
	SHLL.L #2,ERd	L		2									—	—	↕	↕	0	↕	1

Mnemonic		Operand Size	Addressing Mode/ Instruction Length (Bytes) #xx	Rn	@ERn	@(d,ERn)	@–ERn/@ERn+	@aa	@(d,PC)	@@aa	—	Operation	Condition Code I	H	N	Z	V	C	No. of States*1 Advanced
SHLR	SHLR.B Rd	B		2								0 → MSB → LSB → C	—	—	0	↕	0	↕	1
	SHLR.B #2,Rd	B		2									—	—	0	↕	0	↕	1
	SHLR.W Rd	W		2									—	—	0	↕	0	↕	1
	SHLR.W #2,Rd	W		2									—	—	0	↕	0	↕	1
	SHLR.L ERd	L		2									—	—	0	↕	0	↕	1
	SHLR.L #2,ERd	L		2									—	—	0	↕	0	↕	1
ROTXL	ROTXL.B Rd	B		2								C → MSB → LSB → C	—	—	↕	↕	0	↕	1
	ROTXL.B #2,Rd	B		2									—	—	↕	↕	0	↕	1
	ROTXL.W Rd	W		2									—	—	↕	↕	0	↕	1
	ROTXL.W #2,Rd	W		2									—	—	↕	↕	0	↕	1
	ROTXL.L ERd	L		2									—	—	↕	↕	0	↕	1
	ROTXL.L #2,ERd	L		2									—	—	↕	↕	0	↕	1
ROTXR	ROTXR.B Rd	B		2								MSB → LSB → C	—	—	↕	↕	0	↕	1
	ROTXR.B #2,Rd	B		2									—	—	↕	↕	0	↕	1
	ROTXR.W Rd	W		2									—	—	↕	↕	0	↕	1
	ROTXR.W #2,Rd	W		2									—	—	↕	↕	0	↕	1
	ROTXR.L ERd	L		2									—	—	↕	↕	0	↕	1
	ROTXR.L #2,ERd	L		2									—	—	↕	↕	0	↕	1

Mnemonic		Operand Size	Addressing Mode/ Instruction Length (Bytes) #xx	Rn	@ERn	@(d,ERn)	@−ERn/@ERn+	@aa	@(d,PC)	@@aa	—	Operation	Condition Code I	H	N	Z	V	C	No. of States*1 Advanced
ROTL	ROTL.B Rd	B		2								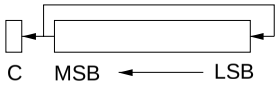	—	—	↕	↕	0	↕	1
	ROTL.B #2,Rd	B		2									—	—	↕	↕	0	↕	1
	ROTL.W Rd	W		2									—	—	↕	↕	0	↕	1
	ROTL.W #2,Rd	W		2									—	—	↕	↕	0	↕	1
	ROTL.L ERd	L		2									—	—	↕	↕	0	↕	1
	ROTL.L #2,ERd	L		2									—	—	↕	↕	0	↕	1
ROTR	ROTR.B Rd	B		2								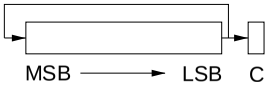	—	—	↕	↕	0	↕	1
	ROTR.B #2,Rd	B		2									—	—	↕	↕	0	↕	1
	ROTR.W Rd	W		2									—	—	↕	↕	0	↕	1
	ROTR.W #2,Rd	W		2									—	—	↕	↕	0	↕	1
	ROTR.L ERd	L		2									—	—	↕	↕	0	↕	1
	ROTR.L #2,ERd	L		2									—	—	↕	↕	0	↕	1

(5) Bit-Manipulation Instructions

Mnemonic		Operand Size	Addressing Mode/ Instruction Length (Bytes) #xx	Rn	@ERn	@(d,ERn)	@–ERn/@ERn+	@aa	@(d,PC)	@@aa	—	Operation	Condition Code I	H	N	Z	V	C	No. of States*1 Advanced
BSET	BSET #xx:3,Rd	B		2								(#xx:3 of Rd8)←1	—	—	—	—	—	—	1
	BSET #xx:3,@ERd	B			4							(#xx:3 of @ERd)←1	—	—	—	—	—	—	4
	BSET #xx:3,@aa:8	B						4				(#xx:3 of @aa:8)←1	—	—	—	—	—	—	4
	BSET #xx:3,@aa:16	B						6				(#xx:3 of @aa:16)←1	—	—	—	—	—	—	5
	BSET #xx:3,@aa:32	B						8				(#xx:3 of @aa:32)←1	—	—	—	—	—	—	6
	BSET Rn,Rd	B		2								(Rn8 of Rd8)←1	—	—	—	—	—	—	1
	BSET Rn,@ERd	B			4							(Rn8 of @ERd)←1	—	—	—	—	—	—	4
	BSET Rn,@aa:8	B						4				(Rn8 of @aa:8)←1	—	—	—	—	—	—	4
	BSET Rn,@aa:16	B						6				(Rn8 of @aa:16)←1	—	—	—	—	—	—	5
	BSET Rn,@aa:32	B						8				(Rn8 of @aa:32)←1	—	—	—	—	—	—	6
BCLR	BCLR #xx:3,Rd	B		2								(#xx:3 of Rd8)←0	—	—	—	—	—	—	1
	BCLR #xx:3,@ERd	B			4							(#xx:3 of @ERd)←0	—	—	—	—	—	—	4
	BCLR #xx:3,@aa:8	B						4				(#xx:3 of @aa:8)←0	—	—	—	—	—	—	4
	BCLR #xx:3,@aa:16	B						6				(#xx:3 of @aa:16)←0	—	—	—	—	—	—	5
	BCLR #xx:3,@aa:32	B						8				(#xx:3 of @aa:32)←0	—	—	—	—	—	—	6
	BCLR Rn,Rd	B		2								(Rn8 of Rd8)←0	—	—	—	—	—	—	1
	BCLR Rn,@ERd	B			4							(Rn8 of @ERd)←0	—	—	—	—	—	—	4
	BCLR Rn,@aa:8	B						4				(Rn8 of @aa:8)←0	—	—	—	—	—	—	4
	BCLR Rn,@aa:16	B						6				(Rn8 of @aa:16)←0	—	—	—	—	—	—	5

Mnemonic		Operand Size	Addressing Mode/ Instruction Length (Bytes) #xx	Rn	@ERn	@(d,ERn)	@–ERn/@ERn+	@aa	@(d,PC)	@@aa	—	Operation	Condition Code I	H	N	Z	V	C	No. of States*1 Advanced
BCLR	BCLR Rn,@aa:32	B						8				(Rn8 of @aa:32)←0	—	—	—	—	—	—	6
BNOT	BNOT #xx:3,Rd	B		2								(#xx:3 of Rd8)←[¬ (#xx:3 of Rd8)]	—	—	—	—	—	—	1
	BNOT #xx:3,@ERd	B			4							(#xx:3 of @ERd)← [¬ (#xx:3 of @ERd)]	—	—	—	—	—	—	4
	BNOT #xx:3,@aa:8	B						4				(#xx:3 of @aa:8)← [¬ (#xx:3 of @aa:8)]	—	—	—	—	—	—	4
	BNOT #xx:3,@aa:16	B						6				(#xx:3 of @aa:16)← [¬ (#xx:3 of @aa:16)]	—	—	—	—	—	—	5
	BNOT #xx:3,@aa:32	B						8				(#xx:3 of @aa:32)← [¬ (#xx:3 of @aa:32)]	—	—	—	—	—	—	6
	BNOT Rn,Rd	B		2								(Rn8 of Rd8)←[¬ (Rn8 of Rd8)]	—	—	—	—	—	—	1
	BNOT Rn,@ERd	B			4							(Rn8 of @ERd)←[¬ (Rn8 of @ERd)]	—	—	—	—	—	—	4
	BNOT Rn,@aa:8	B						4				(Rn8 of @aa:8)←[¬ (Rn8 of @aa:8)]	—	—	—	—	—	—	4
	BNOT Rn,@aa:16	B						6				(Rn8 of @aa:16)← [¬ (Rn8 of @aa:16)]	—	—	—	—	—	—	5
	BNOT Rn,@aa:32	B						8				(Rn8 of @aa:32)← [¬ (Rn8 of @aa:32)]	—	—	—	—	—	—	6
BTST	BTST #xx:3,Rd	B		2								¬ (#xx:3 of Rd8)→Z	—	—	—	↕	—	—	1
	BTST #xx:3,@ERd	B			4							¬ (#xx:3 of @ERd)→Z	—	—	—	↕	—	—	3
	BTST #xx:3,@aa:8	B						4				¬ (#xx:3 of @aa:8)→Z	—	—	—	↕	—	—	3
	BTST #xx:3,@aa:16	B						6				¬ (#xx:3 of @aa:16)→Z	—	—	—	↕	—	—	4

Mnemonic		Operand Size	Addressing Mode/ Instruction Length (Bytes) #xx	Rn	@ERn	@(d,ERn)	@–ERn/@ERn+	@aa	@(d,PC)	@@aa	—	Operation	Condition Code I	H	N	Z	V	C	No. of States*1 Advanced
BTST	BTST #xx:3,@aa:32	B						8				¬ (#xx:3 of @aa:32)→Z	—	—	—	↕	—	—	5
	BTST Rn,Rd	B		2								¬ (Rn8 of Rd8)→Z	—	—	—	↕	—	—	1
	BTST Rn,@ERd	B			4							¬ (Rn8 of @ERd)→Z	—	—	—	↕	—	—	3
	BTST Rn,@aa:8	B						4				¬ (Rn8 of @aa:8)→Z	—	—	—	↕	—	—	3
	BTST Rn,@aa:16	B						6				¬ (Rn8 of @aa:16)→Z	—	—	—	↕	—	—	4
	BTST Rn,@aa:32	B						8				¬ (Rn8 of @aa:32)→Z	—	—	—	↕	—	—	5
BLD	BLD #xx:3,Rd	B		2								(#xx:3 of Rd8)→C	—	—	—	—	—	↕	1
	BLD #xx:3,@ERd	B			4							(#xx:3 of @ERd)→C	—	—	—	—	—	↕	3
	BLD #xx:3,@aa:8	B						4				(#xx:3 of @aa:8)→C	—	—	—	—	—	↕	3
	BLD #xx:3,@aa:16	B						6				(#xx:3 of @aa:16)→C	—	—	—	—	—	↕	4
	BLD #xx:3,@aa:32	B						8				(#xx:3 of @aa:32)→C	—	—	—	—	—	↕	5
BILD	BILD #xx:3,Rd	B		2								¬ (#xx:3 of Rd8)→C	—	—	—	—	—	↕	1
	BILD #xx:3,@ERd	B			4							¬ (#xx:3 of @ERd)→C	—	—	—	—	—	↕	3
	BILD #xx:3,@aa:8	B						4				¬ (#xx:3 of @aa:8)→C	—	—	—	—	—	↕	3
	BILD #xx:3,@aa:16	B						6				¬ (#xx:3 of @aa:16)→C	—	—	—	—	—	↕	4
	BILD #xx:3,@aa:32	B						8				¬ (#xx:3 of @aa:32)→C	—	—	—	—	—	↕	5
BST	BST #xx:3,Rd	B		2								C→(#xx:3 of Rd8)	—	—	—	—	—	—	1
	BST #xx:3,@ERd	B			4							C→(#xx:3 of @ERd)	—	—	—	—	—	—	4
	BST #xx:3,@aa:8	B						4				C→(#xx:3 of @aa:8)	—	—	—	—	—	—	4

Mnemonic		Operand Size	Addressing Mode/ Instruction Length (Bytes) #xx	Rn	@ERn	@(d,ERn)	@–ERn/@ERn+	@aa	@(d,PC)	@@aa	—	Operation	Condition Code I	H	N	Z	V	C	No. of States*1 Advanced
BST	BST #xx:3,@aa:16	B						6				C→(#xx:3 of @aa:16)	—	—	—	—	—	—	5
	BST #xx:3,@aa:32	B						8				C→(#xx:3 of @aa:32)	—	—	—	—	—	—	6
BIST	BIST #xx:3,Rd	B		2								¬ C→(#xx:3 of Rd8)	—	—	—	—	—	—	1
	BIST #xx:3,@ERd	B			4							¬ C→(#xx:3 of @ERd)	—	—	—	—	—	—	4
	BIST #xx:3,@aa:8	B						4				¬ C→(#xx:3 of @aa:8)	—	—	—	—	—	—	4
	BIST #xx:3,@aa:16	B						6				¬ C→(#xx:3 of @aa:16)	—	—	—	—	—	—	5
	BIST #xx:3,@aa:32	B						8				¬ C→(#xx:3 of @aa:32)	—	—	—	—	—	—	6
BAND	BAND #xx:3,Rd	B		2								C∧(#xx:3 of Rd8)→C	—	—	—	—	—	↕	1
	BAND #xx:3,@ERd	B			4							C∧(#xx:3 of @ERd)→C	—	—	—	—	—	↕	3
	BAND #xx:3,@aa:8	B						4				C∧(#xx:3 of @aa:8)→C	—	—	—	—	—	↕	3
	BAND #xx:3,@aa:16	B						6				C∧(#xx:3 of @aa:16)→C	—	—	—	—	—	↕	4
	BAND #xx:3,@aa:32	B						8				C∧(#xx:3 of @aa:32)→C	—	—	—	—	—	↕	5
BIAND	BIAND #xx:3,Rd	B		2								C∧[¬ (#xx:3 of Rd8)]→C	—	—	—	—	—	↕	1
	BIAND #xx:3,@ERd	B			4							C∧[¬ (#xx:3 of @ERd)]→C	—	—	—	—	—	↕	3
	BIAND #xx:3,@aa:8	B						4				C∧[¬ (#xx:3 of @aa:8)]→C	—	—	—	—	—	↕	3
	BIAND #xx:3,@aa:16	B						6				C∧[¬ (#xx:3 of @aa:16)]→C	—	—	—	—	—	↕	4
	BIAND #xx:3,@aa:32	B						8				C∧[¬ (#xx:3 of @aa:32)]→C	—	—	—	—	—	↕	5
BOR	BOR #xx:3,Rd	B		2								C∨(#xx:3 of Rd8)→C	—	—	—	—	—	↕	1
	BOR #xx:3,@ERd	B			4							C∨(#xx:3 of @ERd)→C	—	—	—	—	—	↕	3

Mnemonic		Operand Size	Addressing Mode/ Instruction Length (Bytes) #xx	Rn	@ERn	@(d,ERn)	@–ERn/@ERn+	@aa	@(d,PC)	@@aa	—	Operation	Condition Code I	H	N	Z	V	C	No. of States*1 Advanced
BOR	BOR #xx:3,@aa:8	B						4				C∨(#xx:3 of @aa:8)→C	—	—	—	—	—	↕	3
	BOR #xx:3,@aa:16	B						6				C∨(#xx:3 of @aa:16)→C	—	—	—	—	—	↕	4
	BOR #xx:3,@aa:32	B						8				C∨(#xx:3 of @aa:32)→C	—	—	—	—	—	↕	5
BIOR	BIOR #xx:3,Rd	B		2								C∨[¬ (#xx:3 of Rd8)]→C	—	—	—	—	—	↕	1
	BIOR #xx:3,@ERd	B			4							C∨[¬ (#xx:3 of @ERd)]→C	—	—	—	—	—	↕	3
	BIOR #xx:3,@aa:8	B						4				C∨[¬ (#xx:3 of @aa:8)]→C	—	—	—	—	—	↕	3
	BIOR #xx:3,@aa:16	B						6				C∨[¬ (#xx:3 of @aa:16)]→C	—	—	—	—	—	↕	4
	BIOR #xx:3,@aa:32	B						8				C∨[¬ (#xx:3 of @aa:32)]→C	—	—	—	—	—	↕	5
BXOR	BXOR #xx:3,Rd	B		2								C⊕(#xx:3 of Rd8)→C	—	—	—	—	—	↕	1
	BXOR #xx:3,@ERd	B			4							C⊕(#xx:3 of @ERd)→C	—	—	—	—	—	↕	3
	BXOR #xx:3,@aa:8	B						4				C⊕(#xx:3 of @aa:8)→C	—	—	—	—	—	↕	3
	BXOR #xx:3,@aa:16	B						6				C⊕(#xx:3 of @aa:16)→C	—	—	—	—	—	↕	4
	BXOR #xx:3,@aa:32	B						8				C⊕(#xx:3 of @aa:32)→C	—	—	—	—	—	↕	5
BIXOR	BIXOR #xx:3,Rd	B		2								C⊕[¬ (#xx:3 of Rd8)]→C	—	—	—	—	—	↕	1
	BIXOR #xx:3,@ERd	B			4							C⊕[¬ (#xx:3 of @ERd)]→C	—	—	—	—	—	↕	3
	BIXOR #xx:3,@aa:8	B						4				C⊕[¬ (#xx:3 of @aa:8)]→C	—	—	—	—	—	↕	3
	BIXOR #xx:3,@aa:16	B						6				C⊕[¬ (#xx:3 of @aa:16)]→C	—	—	—	—	—	↕	4
	BIXOR #xx:3,@aa:32	B						8				C⊕[¬ (#xx:3 of @aa:32)]→C	—	—	—	—	—	↕	5

(6) Branch Instructions

Mnemonic		Operand Size	Addressing Mode/ Instruction Length (Bytes) #xx	Rn	@ERn	@(d,ERn)	@–ERn/@ERn+	@aa	@(d,PC)	@@aa	—	Operation	Branching Condition	Condition Code I	H	N	Z	V	C	No. of States*1 Advanced
Bcc	BRA d:8(BT d:8)	—							2			if condition is true then	Always	—	—	—	—	—	—	2
	BRA d:16(BT d:16)	—							4			PC←PC+d		—	—	—	—	—	—	3
	BRN d:8(BF d:8)	—							2			else next;	Never	—	—	—	—	—	—	2
	BRN d:16(BF d:16)	—							4					—	—	—	—	—	—	3
	BHI d:8	—							2				C∨Z=0	—	—	—	—	—	—	2
	BHI d:16	—							4					—	—	—	—	—	—	3
	BLS d:8	—							2				C∨Z=1	—	—	—	—	—	—	2
	BLS d:16	—							4					—	—	—	—	—	—	3
	BCC d:B(BHS d:8)	—							2				C=0	—	—	—	—	—	—	2
	BCC d:16(BHS d:16)	—							4					—	—	—	—	—	—	3
	BCS d:8(BLO d:8)	—							2				C=1	—	—	—	—	—	—	2
	BCS d:16(BLO d:16)	—							4					—	—	—	—	—	—	3
	BNE d:8	—							2				Z=0	—	—	—	—	—	—	2
	BNE d:16	—							4					—	—	—	—	—	—	3
	BEQ d:8	—							2				Z=1	—	—	—	—	—	—	2
	BEQ d:16	—							4					—	—	—	—	—	—	3
	BVC d:8	—							2				V=0	—	—	—	—	—	—	2
	BVC d:16	—							4					—	—	—	—	—	—	3

Mnemonic		Operand Size	Addressing Mode/ Instruction Length (Bytes) #xx	Rn	@ERn	@(d,ERn)	@–ERn/@ERn+	@aa	@(d,PC)	@@aa	—	Operation	Branching Condition	Condition Code I	H	N	Z	V	C	No. of States*1 Advanced
Bcc	BVS d:8	—							2				V=1	—	—	—	—	—	—	2
	BVS d:16	—							4					—	—	—	—	—	—	3
	BPL d:8	—							2				N=0	—	—	—	—	—	—	2
	BPL d:16	—							4					—	—	—	—	—	—	3
	BMI d:8	—							2				N=1	—	—	—	—	—	—	2
	BMI d:16	—							4					—	—	—	—	—	—	3
	BGE d:8	—							2				N⊕V=0	—	—	—	—	—	—	2
	BGE d:16	—							4					—	—	—	—	—	—	3
	BLT d:8	—							2				N⊕V=1	—	—	—	—	—	—	2
	BLT d:16	—							4					—	—	—	—	—	—	3
	BGT d:8	—							2				Z∨(N⊕V)=0	—	—	—	—	—	—	2
	BGT d:16	—							4					—	—	—	—	—	—	3
	BLE d:8	—							2				Z∨(N⊕V)=1	—	—	—	—	—	—	2
	BLE d:16	—							4					—	—	—	—	—	—	3

Mnemonic		Operand Size	Addressing Mode/ Instruction Length (Bytes) #xx	Rn	@ERn	@(d,ERn)	@–ERn/@ERn+	@aa	@(d,PC)	@@aa	—	Operation	Condition Code I	H	N	Z	V	C	No. of States*1 Advanced
JMP	JMP @ERn	—			2							PC←ERn	—	—	—	—	—	—	2
	JMP @aa:24	—						4				PC←aa:24	—	—	—	—	—	—	3
	JMP @@aa:8	—								2		PC←@aa:8	—	—	—	—	—	—	5
BSR	BSR d:8	—							2			PC→@-SP,PC←PC+d:8	—	—	—	—	—	—	4
	BSR d:16	—							4			PC→@-SP,PC←PC+d:16	—	—	—	—	—	—	5
JSR	JSR @ERn	—			2							PC→@-SP,PC←ERn	—	—	—	—	—	—	4
	JSR @aa:24	—						4				PC→@-SP,PC←aa:24	—	—	—	—	—	—	5
	JSR @@aa:8	—								2		PC→@-SP,PC←@aa:8	—	—	—	—	—	—	6
RTS	RTS	—									2	PC←@SP+	—	—	—	—	—	—	5

(7) System Control Instructions

Mnemonic		Operand Size	Addressing Mode/ Instruction Length (Bytes) #xx	Rn	@ERn	@(d,ERn)	@–ERn/@ERn+	@aa	@(d,PC)	@@aa	—	Operation	Condition Code I	H	N	Z	V	C	No. of States*1 Advanced
TRAPA	TRAPA #xx:2	—										PC→@-SP,CCR→@-SP, EXR→@-SP,<vector>→PC	1	—	—	—	—	—	8 [9]
RTE	RTE	—										EXR←@SP+,CCR←@SP+, PC←@SP+	↕	↕	↕	↕	↕	↕	5 [9]
SLEEP	SLEEP	—										Transition to power-down state	—	—	—	—	—	—	2
LDC	LDC #xx:8,CCR	B	2									#xx:8→CCR	↕	↕	↕	↕	↕	↕	1
	LDC #xx:8,EXR	B	4									#xx:8→EXR	—	—	—	—	—	—	2
	LDC Rs,CCR	B		2								Rs8→CCR	↕	↕	↕	↕	↕	↕	1
	LDC Rs,EXR	B		2								Rs8→EXR	—	—	—	—	—	—	1
	LDC @ERs,CCR	W			4							@ERs→CCR	↕	↕	↕	↕	↕	↕	3
	LDC @ERs,EXR	W			4							@ERs→EXR	—	—	—	—	—	—	3
	LDC @(d:16,ERs),CCR	W				6						@(d:16,ERs)→CCR	↕	↕	↕	↕	↕	↕	4
	LDC @(d:16,ERs),EXR	W				6						@(d:16,ERs)→EXR	—	—	—	—	—	—	4
	LDC @(d:32,ERs),CCR	W				10						@(d:32,ERs)→CCR	↕	↕	↕	↕	↕	↕	6
	LDC @(d:32,ERs),EXR	W				10						@(d:32,ERs)→EXR	—	—	—	—	—	—	6
	LDC @ERs+,CCR	W					4					@ERs→CCR,ERs32+2→ERs32	↕	↕	↕	↕	↕	↕	4
	LDC @ERs+,EXR	W					4					@ERs→EXR,ERs32+2→ERs32	—	—	—	—	—	—	4
	LDC @aa:16,CCR	W						6				@aa:16→CCR	↕	↕	↕	↕	↕	↕	4
	LDC @aa:16,EXR	W						6				@aa:16→EXR	—	—	—	—	—	—	4
	LDC @aa:32,CCR	W						8				@aa:32→CCR	↕	↕	↕	↕	↕	↕	5
	LDC @aa:32,EXR	W						8				@aa:32→EXR	—	—	—	—	—	—	5

Mnemonic		Operand Size	Addressing Mode/ Instruction Length (Bytes) #xx	Rn	@ERn	@(d,ERn)	@–ERn/@ERn+	@aa	@(d,PC)	@@aa	—	Operation	Condition Code I	H	N	Z	V	C	No. of States*1 Advanced
STC	STC CCR,Rd	B		2								CCR→Rd8	—	—	—	—	—	—	1
	STC EXR,Rd	B		2								EXR→Rd8	—	—	—	—	—	—	1
	STC CCR,@ERd	W			4							CCR→@ERd	—	—	—	—	—	—	3
	STC EXR,@ERd	W			4							EXR→@ERd	—	—	—	—	—	—	3
	STC CCR,@(d:16,ERd)	W				6						CCR→@(d:16,ERd)	—	—	—	—	—	—	4
	STC EXR,@(d:16,ERd)	W				6						EXR→@(d:16,ERd)	—	—	—	—	—	—	4
	STC CCR,@(d:32,ERd)	W				10						CCR→@(d:32,ERd)	—	—	—	—	—	—	6
	STC EXR,@(d:32,ERd)	W				10						EXR→@(d:32,ERd)	—	—	—	—	—	—	6
	STC CCR,@-ERd	W					4					ERd32-2→ERd32,CCR→@ERd	—	—	—	—	—	—	4
	STC EXR,@-ERd	W					4					ERd32-2→ERd32,EXR→@ERd	—	—	—	—	—	—	4
	STC CCR,@aa:16	W						6				CCR→@aa:16	—	—	—	—	—	—	4
	STC EXR,@aa:16	W						6				EXR→@aa:16	—	—	—	—	—	—	4
	STC CCR,@aa:32	W						8				CCR→@aa:32	—	—	—	—	—	—	5
	STC EXR,@aa:32	W						8				EXR→@aa:32	—	—	—	—	—	—	5
ANDC	ANDC #xx:8,CCR	B	2									CCR∧#xx:8→CCR	↕	↕	↕	↕	↕	↕	1
	ANDC #xx:8,EXR	B	4									EXR∧#xx:8→EXR	—	—	—	—	—	—	2
ORC	ORC #xx:8,CCR	B	2									CCR∨#xx:8→CCR	↕	↕	↕	↕	↕	↕	1
	ORC #xx:8,EXR	B	4									EXR∨#xx:8→EXR	—	—	—	—	—	—	2
XORC	XORC #xx:8,CCR	B	2									CCR⊕#xx:8→CCR	↕	↕	↕	↕	↕	↕	1
	XORC #xx:8,EXR	B	4									EXR⊕#xx:8→EXR	—	—	—	—	—	—	2
NOP	NOP	—									2	PC←PC+2	—	—	—	—	—	—	1

(8) Block Transfer Instructions

Mnemonic		Operand Size	Addressing Mode/ Instruction Length (Bytes) #xx	Rn	@ERn	@(d,ERn)	@–ERn/@ERn+	@aa	@(d,PC)	@@aa	|	Operation	Condition Code I	H	N	Z	V	C	No. of States*1 Advanced
EEPMOV	EEPMOV.B	—									4	if R4L≠0 Repeat @ER5→@ER6 ER5+1→ER5 ER6+1→ER6 R4L-1→R4L Until R4L=0 else next;	—	—	—	—	—	—	4+2n *2
	EEPMOV.W	—									4	if R4≠0 Repeat @ER5→@ER6 ER5+1→ER5 ER6+1→ER6 R4-1→R4 Until R4=0 else next;	—	—	—	—	—	—	4+2n *2

Notes: 1. The number of states is the number of states required for execution when the instruction and its operands are located in on-chip memory.
2. n is the initial value of R4L or R4.
3. Only register ER0, ER1, ER4, or ER5 should be used when using the TAS instruction.
[1] Seven states for saving or restoring two registers, nine states for three registers, or eleven states for four registers.
[2] Cannot be used in the H8S/2357 Series.
[3] Set to 1 when a carry or borrow occurs at bit 11; otherwise cleared to 0.
[4] Set to 1 when a carry or borrow occurs at bit 27; otherwise cleared to 0.
[5] Retains its previous value when the result is zero; otherwise cleared to 0.
[6] Set to 1 when the divisor is negative; otherwise cleared to 0.
[7] Set to 1 when the divisor is zero; otherwise cleared to 0.
[8] Set to 1 when the quotient is negative; otherwise cleared to 0.
[9] One additional state is required for execution when EXR is valid.

A.2 Instruction Codes

Table A-2 shows the instruction codes.

Table A-2 Instruction Codes

Instruction	Mnemonic	Size	Instruction Format									
			1st byte	2nd byte	3rd byte	4th byte	5th byte	6th byte	7th byte	8th byte	9th byte	10th byte
ADD	ADD.B #xx:8,Rd	B	8 rd	IMM								
	ADD.B Rs,Rd	B	0 8	rs rd								
	ADD.W #xx:16,Rd	W	7 9	1 rd	IMM							
	ADD.W Rs,Rd	W	0 9	rs rd								
	ADD.L #xx:32,ERd	L	7 A	1 0 erd	IMM							
	ADD.L ERs,ERd	L	0 A	1 ers 0 erd								
ADDS	ADDS #1,ERd	L	0 B	0 0 erd								
	ADDS #2,ERd	L	0 B	8 0 erd								
	ADDS #4,ERd	L	0 B	9 0 erd								
ADDX	ADDX #xx:8,Rd	B	9 rd	IMM								
	ADDX Rs,Rd	B	0 E	rs rd								
AND	AND.B #xx:8,Rd	B	E rd	IMM								
	AND.B Rs,Rd	B	1 6	rs rd								
	AND.W #xx:16,Rd	W	7 9	6 rd	IMM							
	AND.W Rs,Rd	W	6 6	rs rd								
	AND.L #xx:32,ERd	L	7 A	6 0 erd	IMM							
	AND.L ERs,ERd	L	0 1	F 0	6 6	0 ers 0 erd						
ANDC	ANDC #xx:8,CCR	B	0 6	IMM								
	ANDC #xx:8,EXR	B	0 1	4 1	0 6	IMM						
BAND	BAND #xx:3,Rd	B	7 6	0 IMM rd								
	BAND #xx:3,@ERd	B	7 C	0 erd 0	7 6	0 IMM 0						
	BAND #xx:3,@aa:8	B	7 E	abs	7 6	0 IMM 0						
	BAND #xx:3,@aa:16	B	6 A	1 0	abs		7 6	0 IMM 0				
	BAND #xx:3,@aa:32	B	6 A	3 0	abs				7 6	0 IMM 0		
Bcc	BRA d:8 (BT d:8)	—	4 0	disp								
	BRA d:16 (BT d:16)	—	5 8	0 0	disp							
	BRN d:8 (BF d:8)	—	4 1	disp								
	BRN d:16 (BF d:16)	—	5 8	1 0	disp							

Instruction	Mnemonic	Size	Instruction Format									
			1st byte	2nd byte	3rd byte	4th byte	5th byte	6th byte	7th byte	8th byte	9th byte	10th byte
Bcc	BHI d:8	—	4 2	disp								
	BHI d:16	—	5 8	2 0	disp							
	BLS d:8	—	4 3	disp								
	BLS d:16	—	5 8	3 0	disp							
	BCC d:8 (BHS d:8)	—	4 4	disp								
	BCC d:16 (BHS d:16)	—	5 8	4 0	disp							
	BCS d:8 (BLO d:8)	—	4 5	disp								
	BCS d:16 (BLO d:16)	—	5 8	5 0	disp							
	BNE d:8	—	4 6	disp								
	BNE d:16	—	5 8	6 0	disp							
	BEQ d:8	—	4 7	disp								
	BEQ d:16	—	5 8	7 0	disp							
	BVC d:8	—	4 8	disp								
	BVC d:16	—	5 8	8 0	disp							
	BVS d:8	—	4 9	disp								
	BVS d:16	—	5 8	9 0	disp							
	BPL d:8	—	4 A	disp								
	BPL d:16	—	5 8	A 0	disp							
	BMI d:8	—	4 B	disp								
	BMI d:16	—	5 8	B 0	disp							
	BGE d:8	—	4 C	disp								
	BGE d:16	—	5 8	C 0	disp							
	BLT d:8	—	4 D	disp								
	BLT d:16	—	5 8	D 0	disp							
	BGT d:8	—	4 E	disp								
	BGT d:16	—	5 8	E 0	disp							
	BLE d:8	—	4 F	disp								
	BLE d:16	—	5 8	F 0	disp							

Instruction	Mnemonic	Size	Instruction Format																			
			1st byte		2nd byte		3rd byte		4th byte		5th byte		6th byte		7th byte		8th byte		9th byte	10th byte
BCLR	BCLR #xx:3,Rd	B	7	2	0 IMM	rd														
	BCLR #xx:3,@ERd	B	7	D	0 erd	0	7	2	0 IMM	0										
	BCLR #xx:3,@aa:8	B	7	F	abs		7	2	0 IMM	0										
	BCLR #xx:3,@aa:16	B	6	A	1	8	abs				7	2	0 IMM	0						
	BCLR #xx:3,@aa:32	B	6	A	3	8	abs								7	2	0 IMM	0		
	BCLR Rn,Rd	B	6	2	rn	rd														
	BCLR Rn,@ERd	B	7	D	0 erd	0	6	2	rn	0										
	BCLR Rn,@aa:8	B	7	F	abs		6	2	rn	0										
	BCLR Rn,@aa:16	B	6	A	1	8	abs				6	2	rn	0						
	BCLR Rn,@aa:32	B	6	A	3	8	abs								6	2	rn	0		
BIAND	BIAND #xx:3,Rd	B	7	6	1 IMM	rd														
	BIAND #xx:3,@ERd	B	7	C	0 erd	0	7	6	1 IMM	0										
	BIAND #xx:3,@aa:8	B	7	E	abs		7	6	1 IMM	0										
	BIAND #xx:3,@aa:16	B	6	A	1	0	abs				7	6	1 IMM	0						
	BIAND #xx:3,@aa:32	B	6	A	3	0	abs								7	6	1 IMM	0		
BILD	BILD #xx:3,Rd	B	7	7	1 IMM	rd														
	BILD #xx:3,@ERd	B	7	C	0 erd	0	7	7	1 IMM	0										
	BILD #xx:3,@aa:8	B	7	E	abs		7	7	1 IMM	0										
	BILD #xx:3,@aa:16	B	6	A	1	0	abs				7	7	1 IMM	0						
	BILD #xx:3,@aa:32	B	6	A	3	0	abs								7	7	1 IMM	0		
BIOR	BIOR #xx:3,Rd	B	7	4	1 IMM	rd														
	BIOR #xx:3,@ERd	B	7	C	0 erd	0	7	4	1 IMM	0										
	BIOR #xx:3,@aa:8	B	7	E	abs		7	4	1 IMM	0										
	BIOR #xx:3,@aa:16	B	6	A	1	0	abs				7	4	1 IMM	0						
	BIOR #xx:3,@aa:32	B	6	A	3	0	abs								7	4	1 IMM	0		

Instruction	Mnemonic	Size	Instruction Format																			
			1st byte		2nd byte		3rd byte		4th byte		5th byte		6th byte		7th byte		8th byte		9th byte	10th byte
BIST	BIST #xx:3,Rd	B	6	7	1	IMM	rd													
	BIST #xx:3,@ERd	B	7	D	0	erd	0	6	7	1	IMM	0								
	BIST #xx:3,@aa:8	B	7	F	abs			6	7	1	IMM	0								
	BIST #xx:3,@aa:16	B	6	A	1	8	abs						6	7	1	IMM	0			
	BIST #xx:3,@aa:32	B	6	A	3	8	abs								6	7	1	IMM	0	
BIXOR	BIXOR #xx:3,Rd	B	7	5	1	IMM	rd													
	BIXOR #xx:3,@ERd	B	7	C	0	erd	0	7	5	1	IMM	0								
	BIXOR #xx:3,@aa:8	B	7	E	abs			7	5	1	IMM	0								
	BIXOR #xx:3,@aa:16	B	6	A	1	0	abs						7	5	1	IMM	0			
	BIXOR #xx:3,@aa:32	B	6	A	3	0	abs								7	5	1	IMM	0	
BLD	BLD #xx:3,Rd	B	7	7	0	IMM	rd													
	BLD #xx:3,@ERd	B	7	C	0	erd	0	7	7	0	IMM	0								
	BLD #xx:3,@aa:8	B	7	E	abs			7	7	0	IMM	0								
	BLD #xx:3,@aa:16	B	6	A	1	0	abs						7	7	0	IMM	0			
	BLD #xx:3,@aa:32	B	6	A	3	0	abs								7	7	0	IMM	0	
BNOT	BNOT #xx:3,Rd	B	7	1	0	IMM	rd													
	BNOT #xx:3,@ERd	B	7	D	0	erd	0	7	1	0	IMM	0								
	BNOT #xx:3,@aa:8	B	7	F	abs			7	1	0	IMM	0								
	BNOT #xx:3,@aa:16	B	6	A	1	8	abs						7	1	0	IMM	0			
	BNOT #xx:3,@aa:32	B	6	A	3	8	abs								7	1	0	IMM	0	
	BNOT Rn,Rd	B	6	1	rn	rd														
	BNOT Rn,@ERd	B	7	D	0	erd	0	6	1	rn	0									
	BNOT Rn,@aa:8	B	7	F	abs			6	1	rn	0									
	BNOT Rn,@aa:16	B	6	A	1	8	abs						6	1	rn	0				
	BNOT Rn,@aa:32	B	6	A	3	8	abs								6	1	rn	0		

Instruction	Mnemonic	Size	Instruction Format																			
			1st byte		2nd byte		3rd byte		4th byte		5th byte		6th byte		7th byte		8th byte		9th byte		10th byte	
BOR	BOR #xx:3,Rd	B	7	4	0	IMM	rd															
	BOR #xx:3,@ERd	B	7	C	0	erd	0	7	4	0	IMM	0										
	BOR #xx:3,@aa:8	B	7	E	abs			7	4	0	IMM	0										
	BOR #xx:3,@aa:16	B	6	A	1	0	abs						7	4	0	IMM	0					
	BOR #xx:3,@aa:32	B	6	A	3	0	abs										7	4	0	IMM	0	
BSET	BSET #xx:3,Rd	B	7	0	0	IMM	rd															
	BSET #xx:3,@ERd	B	7	D	0	erd	0	7	0	0	IMM	0										
	BSET #xx:3,@aa:8	B	7	F	abs			7	0	0	IMM	0										
	BSET #xx:3,@aa:16	B	6	A	1	8	abs						7	0	0	IMM	0					
	BSET #xx:3,@aa:32	B	6	A	3	8	abs										7	0	0	IMM	0	
	BSET Rn,Rd	B	6	0	rn	rd																
	BSET Rn,@ERd	B	7	D	0	erd	0	6	0	rn	0											
	BSET Rn,@aa:8	B	7	F	abs			6	0	rn	0											
	BSET Rn,@aa:16	B	6	A	1	8	abs						6	0	rn	0						
	BSET Rn,@aa:32	B	6	A	3	8	abs										6	0	rn	0		
BSR	BSR d:8	—	5	5	disp																	
	BSR d:16	—	5	C	0	0	disp															
BST	BST #xx:3,Rd	B	6	7	0	IMM	rd															
	BST #xx:3,@ERd	B	7	D	0	erd	0	6	7	0	IMM	0										
	BST #xx:3,@aa:8	B	7	F	abs			6	7	0	IMM	0										
	BST #xx:3,@aa:16	B	6	A	1	8	abs						6	7	0	IMM	0					
	BST #xx:3,@aa:32	B	6	A	3	8	abs										6	7	0	IMM	0	
BTST	BTST #xx:3,Rd	B	7	3	0	IMM	rd															
	BTST #xx:3,@ERd	B	7	C	0	erd	0	7	3	0	IMM	0										
	BTST #xx:3,@aa:8	B	7	E	abs			7	3	0	IMM	0										
	BTST #xx:3,@aa:16	B	6	A	1	0	abs						7	3	0	IMM	0					
	BTST #xx:3,@aa:32	B	6	A	3	0	abs										7	3	0	IMM	0	
	BTST Rn,Rd	B	6	3	rn	rd																
	BTST Rn,@ERd	B	7	C	0	erd	0	6	3	rn	0											

Instruction	Mnemonic	Size	Instruction Format																			
			1st byte		2nd byte		3rd byte		4th byte		5th byte		6th byte		7th byte		8th byte		9th byte	10th byte
BTST	BTST Rn,@aa:8	B	7	E	abs		6	3	rn	0										
	BTST Rn,@aa:16	B	6	A	1	0	abs				6	3	rn	0						
	BTST Rn,@aa:32	B	6	A	3	0	abs								6	3	rn	0		
BXOR	BXOR #xx:3,Rd	B	7	5	0	IMM	rd													
	BXOR #xx:3,@ERd	B	7	C	0	erd	0	7	5	0 IMM	0									
	BXOR #xx:3,@aa:8	B	7	E	abs		7	5	0 IMM	0										
	BXOR #xx:3,@aa:16	B	6	A	1	0	abs				7	5	0 IMM	0						
	BXOR #xx:3,@aa:32	B	6	A	3	0	abs								7	5	0 IMM	0		
CLRMAC	CLRMAC	—	Cannot be used in the H8S/2357 Group																	
CMP	CMP.B #xx:8,Rd	B	A	rd	IMM															
	CMP.B Rs,Rd	B	1	C	rs	rd														
	CMP.W #xx:16,Rd	W	7	9	2	rd	IMM													
	CMP.W Rs,Rd	W	1	D	rs	rd														
	CMP.L #xx:32,ERd	L	7	A	2	0 erd	IMM													
	CMP.L ERs,ERd	L	1	F	1 ers	0 erd														
DAA	DAA Rd	B	0	F	0	rd														
DAS	DAS Rd	B	1	F	0	rd														
DEC	DEC.B Rd	B	1	A	0	rd														
	DEC.W #1,Rd	W	1	B	5	rd														
	DEC.W #2,Rd	W	1	B	D	rd														
	DEC.L #1,ERd	L	1	B	7	0 erd														
	DEC.L #2,ERd	L	1	B	F	0 erd														
DIVXS	DIVXS.B Rs,Rd	B	0	1	D	0	5	1	rs	rd										
	DIVXS.W Rs,ERd	W	0	1	D	0	5	3	rs	0 erd										
DIVXU	DIVXU.B Rs,Rd	B	5	1	rs	rd														
	DIVXU.W Rs,ERd	W	5	3	rs	0 erd														
EEPMOV	EEPMOV.B	—	7	B	5	C	5	9	8	F										
	EEPMOV.W	—	7	B	D	4	5	9	8	F										

Instruction	Mnemonic	Size	Instruction Format																			
			1st byte		2nd byte		3rd byte		4th byte		5th byte		6th byte		7th byte		8th byte		9th byte		10th byte	
EXTS	EXTS.W Rd	W	1	7	D	rd																
	EXTS.L ERd	L	1	7	F	0 erd																
EXTU	EXTU.W Rd	W	1	7	5	rd																
	EXTU.L ERd	L	1	7	7	0 erd																
INC	INC.B Rd	B	0	A	0	rd																
	INC.W #1,Rd	W	0	B	5	rd																
	INC.W #2,Rd	W	0	B	D	rd																
	INC.L #1,ERd	L	0	B	7	0 erd																
	INC.L #2,ERd	L	0	B	F	0 erd																
JMP	JMP @ERn	—	5	9	0 ern	0																
	JMP @aa:24	—	5	A	abs																	
	JMP @@aa:8	—	5	B	abs																	
JSR	JSR @ERn	—	5	D	0 ern	0																
	JSR @aa:24	—	5	E	abs																	
	JSR @@aa:8	—	5	F	abs																	
LDC	LDC #xx:8,CCR	B	0	7	IMM																	
	LDC #xx:8,EXR	B	0	1	4	1	0	7	IMM													
	LDC Rs,CCR	B	0	3	0	rs																
	LDC Rs,EXR	B	0	3	1	rs																
	LDC @ERs,CCR	W	0	1	4	0	6	9	0 ers	0												
	LDC @ERs,EXR	W	0	1	4	1	6	9	0 ers	0												
	LDC @(d:16,ERs),CCR	W	0	1	4	0	6	F	0 ers	0	disp											
	LDC @(d:16,ERs),EXR	W	0	1	4	1	6	F	0 ers	0	disp											
	LDC @(d:32,ERs),CCR	W	0	1	4	0	7	8	0 ers	0	6	B	2	0	disp							
	LDC @(d:32,ERs),EXR	W	0	1	4	1	7	8	0 ers	0	6	B	2	0	disp							
	LDC @ERs+,CCR	W	0	1	4	0	6	D	0 ers	0												
	LDC @ERs+,EXR	W	0	1	4	1	6	D	0 ers	0												
	LDC @aa:16,CCR	W	0	1	4	0	6	B	0	0	disp											
	LDC @aa:16,EXR	W	0	1	4	1	6	B	0	0	disp											

Instruction	Mnemonic	Size	Instruction Format									
			1st byte	2nd byte	3rd byte	4th byte	5th byte	6th byte	7th byte	8th byte	9th byte	10th byte
LDC	LDC @aa:32,CCR	W	0 1	4 0	6 B	2 0	abs					
	LDC @aa:32,EXR	W	0 1	4 1	6 B	2 0	abs					
LDM	LDM.L @SP+, (ERn-ERn+1)	L	0 1	1 0	6 D	7 0 erm+1						
	LDM.L @SP+, (ERn-ERn+2)	L	0 1	2 0	6 D	7 0 erm+2						
	LDM.L @SP+, (ERn-ERn+3)	L	0 1	3 0	6 D	7 0 erm+3						
LDMAC	LDMAC ERs,MACH	L	Cannot be used in the H8S/2357 Group									
	LDMAC ERs,MACL	L										
MAC	MAC @ERn+,@ERm+	—										
MOV	MOV.B #xx:8,Rd	B	F rd	IMM								
	MOV.B Rs,Rd	B	0 C	rs rd								
	MOV.B @ERs,Rd	B	6 8	0 ers rd								
	MOV.B @(d:16,ERs),Rd	B	6 E	0 ers rd	disp							
	MOV.B @(d:32,ERs),Rd	B	7 8	0 ers 0	6 A	2 rd	disp					
	MOV.B @ERs+,Rd	B	6 C	0 ers rd								
	MOV.B @aa:8,Rd	B	2 rd	abs								
	MOV.B @aa:16,Rd	B	6 A	0 rd	abs							
	MOV.B @aa:32,Rd	B	6 A	2 rd	abs							
	MOV.B Rs,@ERd	B	6 8	1 erd rs								
	MOV.B Rs,@(d:16,ERd)	B	6 E	1 erd rs	disp							
	MOV.B Rs,@(d:32,ERd)	B	7 8	0 erd 0	6 A	A rs	disp					
	MOV.B Rs,@-ERd	B	6 C	1 erd rs								
	MOV.B Rs,@aa:8	B	3 rs	abs								
	MOV.B Rs,@aa :16	B	6 A	8 rs	abs							
	MOV.B Rs,@aa:32	B	6 A	A rs	abs							
	MOV.W #xx:16,Rd	W	7 9	0 rd	IMM							
	MOV.W Rs,Rd	W	0 D	rs rd								
	MOV.W @ERs,Rd	W	6 9	0 ers rd								
	MOV.W @(d:16,ERs),Rd	W	6 F	0 ers rd	disp							
	MOV.W @(d:32,ERs),Rd	W	7 8	0 ers 0	6 B	2 rd	disp					

Instruction	Mnemonic	Size	Instruction Format																			
			1st byte		2nd byte		3rd byte		4th byte		5th byte		6th byte		7th byte		8th byte		9th byte		10th byte	
MOV	MOV.W @ERs+,Rd	W	6	D	0	ers	rd															
	MOV.W @aa:16,Rd	W	6	B	0	rd	abs															
	MOV.W @aa:32,Rd	W	6	B	2	rd	abs															
	MOV.W Rs,@ERd	W	6	9	1	erd	rs															
	MOV.W Rs,@(d:16,ERd)	W	6	F	1	erd	rs		disp													
	MOV.W Rs,@(d:32,ERd)	W	7	8	0	erd	0	6	B	A	rs		disp									
	MOV.W Rs,@-ERd	W	6	D	1	erd	rs															
	MOV.W Rs,@aa:16	W	6	B	8	rs	abs															
	MOV.W Rs,@aa:32	W	6	B	A	rs	abs															
	MOV.L #xx:32,ERd	L	7	A	0	0	erd	IMM														
	MOV.L ERs,ERd	L	0	F	1	ers	0	erd														
	MOV.L @ERs,ERd	L	0	1	0	0	6	9	0	ers	0	erd										
	MOV.L @(d:16,ERs),ERd	L	0	1	0	0	6	F	0	ers	0	erd	disp									
	MOV.L @(d:32,ERs),ERd	L	0	1	0	0	7	8	0	ers	0	6	B	2	0	erd	disp					
	MOV.L @ERs+,ERd	L	0	1	0	0	6	D	0	ers	0	erd										
	MOV.L @aa:16 ,ERd	L	0	1	0	0	6	B	0	0	erd	abs										
	MOV.L @aa:32 ,ERd	L	0	1	0	0	6	B	2	0	erd	abs										
	MOV.L ERs,@ERd	L	0	1	0	0	6	9	1	erd	0	ers										
	MOV.L ERs,@(d:16,ERd)	L	0	1	0	0	6	F	1	erd	0	ers	disp									
	MOV.L ERs,@(d:32,ERd)*1	L	0	1	0	0	7	8	0	erd	0	6	B	A	0	ers	disp					
	MOV.L ERs,@-ERd	L	0	1	0	0	6	D	1	erd	0	ers										
	MOV.L ERs,@aa:16	L	0	1	0	0	6	B	8	0	ers	abs										
	MOV.L ERs,@aa:32	L	0	1	0	0	6	B	A	0	ers	abs										
MOVFPE	MOVFPE @aa:16,Rd	B	Cannot be used in the H8S/2357 Group																			
MOVTPE	MOVTPE Rs,@aa:16	B																				
MULXS	MULXS.B Rs,Rd	B	0	1	C	0	5	0	rs	rd												
	MULXS.W Rs,ERd	W	0	1	C	0	5	2	rs	0	erd											
MULXU	MULXU.B Rs,Rd	B	5	0	rs	rd																
	MULXU.W Rs,ERd	W	5	2	rs	0	erd															

Instruction	Mnemonic	Size	Instruction Format									
			1st byte	2nd byte	3rd byte	4th byte	5th byte	6th byte	7th byte	8th byte	9th byte	10th byte
NEG	NEG.B Rd	B	1 7	8 rd								
	NEG.W Rd	W	1 7	9 rd								
	NEG.L ERd	L	1 7	B 0 erd								
NOP	NOP	—	0 0	0 0								
NOT	NOT.B Rd	B	1 7	0 rd								
	NOT.W Rd	W	1 7	1 rd								
	NOT.L ERd	L	1 7	3 0 erd								
OR	OR.B #xx:8,Rd	B	C rd	IMM								
	OR.B Rs,Rd	B	1 4	rs rd								
	OR.W #xx:16,Rd	W	7 9	4 rd	IMM							
	OR.W Rs,Rd	W	6 4	rs rd								
	OR.L #xx:32,ERd	L	7 A	4 0 erd	IMM							
	OR.L ERs,ERd	L	0 1	F 0	6 4	0 ers 0 erd						
ORC	ORC #xx:8,CCR	B	0 4	IMM								
	ORC #xx:8,EXR	B	0 1	4 1	0 4	IMM						
POP	POP.W Rn	W	6 D	7 rn								
	POP.L ERn	L	0 1	0 0	6 D	7 0 ern						
PUSH	PUSH.W Rn	W	6 D	F rn								
	PUSH.L ERn	L	0 1	0 0	6 D	F 0 ern						
ROTL	ROTL.B Rd	B	1 2	8 rd								
	ROTL.B #2, Rd	B	1 2	C rd								
	ROTL.W Rd	W	1 2	9 rd								
	ROTL.W #2, Rd	W	1 2	D rd								
	ROTL.L ERd	L	1 2	B 0 erd								
	ROTL.L #2, ERd	L	1 2	F 0 erd								

Instruction	Mnemonic	Size	Instruction Format											
			1st byte		2nd byte		3rd byte	4th byte	5th byte	6th byte	7th byte	8th byte	9th byte	10th byte
ROTR	ROTR.B Rd	B	1	3	8	rd								
	ROTR.B #2, Rd	B	1	3	C	rd								
	ROTR.W Rd	W	1	3	9	rd								
	ROTR.W #2, Rd	W	1	3	D	rd								
	ROTR.L ERd	L	1	3	B	0 erd								
	ROTR.L #2, ERd	L	1	3	F	0 erd								
ROTXL	ROTXL.B Rd	B	1	2	0	rd								
	ROTXL.B #2, Rd	B	1	2	4	rd								
	ROTXL.W Rd	W	1	2	1	rd								
	ROTXL.W #2, Rd	W	1	2	5	rd								
	ROTXL.L ERd	L	1	2	3	0 erd								
	ROTXL.L #2, ERd	L	1	2	7	0 erd								
ROTXR	ROTXR.B Rd	B	1	3	0	rd								
	ROTXR.B #2, Rd	B	1	3	4	rd								
	ROTXR.W Rd	W	1	3	1	rd								
	ROTXR.W #2, Rd	W	1	3	5	rd								
	ROTXR.L ERd	L	1	3	3	0 erd								
	ROTXR.L #2, ERd	L	1	3	7	0 erd								
RTE	RTE	—	5	6	7	0								
RTS	RTS	—	5	4	7	0								
SHAL	SHAL.B Rd	B	1	0	8	rd								
	SHAL.B #2, Rd	B	1	0	C	rd								
	SHAL.W Rd	W	1	0	9	rd								
	SHAL.W #2, Rd	W	1	0	D	rd								
	SHAL.L ERd	L	1	0	B	0 erd								
	SHAL.L #2, ERd	L	1	0	F	0 erd								

Instruction	Mnemonic	Size	Instruction Format																			
			1st byte		2nd byte		3rd byte		4th byte			5th byte		6th byte		7th byte	8th byte	9th byte	10th byte
SHAR	SHAR.B Rd	B	1	1	8	rd													
	SHAR.B #2, Rd	B	1	1	C	rd													
	SHAR.W Rd	W	1	1	9	rd													
	SHAR.W #2, Rd	W	1	1	D	rd													
	SHAR.L ERd	L	1	1	B	0 erd													
	SHAR.L #2, ERd	L	1	1	F	0 erd													
SHLL	SHLL.B Rd	B	1	0	0	rd													
	SHLL.B #2, Rd	B	1	0	4	rd													
	SHLL.W Rd	W	1	0	1	rd													
	SHLL.W #2, Rd	W	1	0	5	rd													
	SHLL.L ERd	L	1	0	3	0 erd													
	SHLL.L #2, ERd	L	1	0	7	0 erd													
SHLR	SHLR.B Rd	B	1	1	0	rd													
	SHLR.B #2, Rd	B	1	1	4	rd													
	SHLR.W Rd	W	1	1	1	rd													
	SHLR.W #2, Rd	W	1	1	5	rd													
	SHLR.L ERd	L	1	1	3	0 erd													
	SHLR.L #2, ERd	L	1	1	7	0 erd													
SLEEP	SLEEP	—	0	1	8	0													
STC	STC.B CCR,Rd	B	0	2	0	rd													
	STC.B EXR,Rd	B	0	2	1	rd													
	STC.W CCR,@ERd	W	0	1	4	0	6	9	1 erd	0									
	STC.W EXR,@ERd	W	0	1	4	1	6	9	1 erd	0									
	STC.W CCR,@(d:16,ERd)	W	0	1	4	0	6	F	1 erd	0	disp								
	STC.W EXR,@(d:16,ERd)	W	0	1	4	1	6	F	1 erd	0	disp								
	STC.W CCR,@(d:32,ERd)	W	0	1	4	0	7	8	0 erd	0	6	B	A	0	disp				
	STC.W EXR,@(d:32,ERd)	W	0	1	4	1	7	8	0 erd	0	6	B	A	0	disp				
	STC.W CCR,@-ERd	W	0	1	4	0	6	D	1 erd	0									
	STC.W EXR,@-ERd	W	0	1	4	1	6	D	1 erd	0									

Instruction	Mnemonic	Size	Instruction Format													
			1st byte		2nd byte		3rd byte		4th byte		5th byte	6th byte	7th byte	8th byte	9th byte	10th byte
STC	STC.W CCR,@aa:16	W	0	1	4	0	6	B	8	0	abs					
	STC.W EXR,@aa:16	W	0	1	4	1	6	B	8	0	abs					
	STC.W CCR,@aa:32	W	0	1	4	0	6	B	A	0	abs					
	STC.W EXR,@aa:32	W	0	1	4	1	6	B	A	0	abs					
STM	STM.L(ERn-ERn+1), @-SP	L	0	1	1	0	6	D	F	0 ern						
	STM.L (ERn-ERn+2), @-SP	L	0	1	2	0	6	D	F	0 ern						
	STM.L (ERn-ERn+3), @-SP	L	0	1	3	0	6	D	F	0 ern						
STMAC	STMAC MACH,ERd	L	Cannot be used in the H8S/2357 Group													
	STMAC MACL,ERd	L														
SUB	SUB.B Rs,Rd	B	1	8	rs	rd										
	SUB.W #xx:16,Rd	W	7	9	3	rd	IMM									
	SUB.W Rs,Rd	W	1	9	rs	rd										
	SUB.L #xx:32,ERd	L	7	A	3	0 erd	IMM									
	SUB.L ERs,ERd	L	1	A	1 ers	0 erd										
SUBS	SUBS #1,ERd	L	1	B	0	0 erd										
	SUBS #2,ERd	L	1	B	8	0 erd										
	SUBS #4,ERd	L	1	B	9	0 erd										
SUBX	SUBX #xx:8,Rd	B	B	rd	IMM											
	SUBX Rs,Rd	B	1	E	rs	rd										
TAS	TAS @ERd*2	B	0	1	E	0	7	B	0 erd	C						
TRAPA	TRAPA #x:2	—	5	7	00 IMM	0										
XOR	XOR.B #xx:8,Rd	B	D	rd	IMM											
	XOR.B Rs,Rd	B	1	5	rs	rd										
	XOR.W #xx:16,Rd	W	7	9	5	rd	IMM									
	XOR.W Rs,Rd	W	6	5	rs	rd										
	XOR.L #xx:32,ERd	L	7	A	5	0 erd	IMM									
	XOR.L ERs,ERd	L	0	1	F	0	6	5	0 ers	0 erd						

Instruc-tion	Mnemonic	Size	Instruction Format									
			1st byte	2nd byte	3rd byte	4th byte	5th byte	6th byte	7th byte	8th byte	9th byte	10th byte
XORC	XORC #xx:8,CCR	B	0 : 5	IMM								
	XORC #xx:8,EXR	B	0 : 1	4 : 1	0 : 5	IMM						

Notes: 1. Bit 7 of the 4th byte of the MOV.L ERs, @(d:32,ERd) instruction can be either 1 or 0.
2. Only register ER0, ER1, ER4, or ER5 should be used when using the TAS instruction.

Legen:

IMM:	Immediate data (2, 3, 8, 16, or 32 bits)
abs:	Absolute address (8, 16, 24, or 32 bits)
disp:	Displacement (8, 16, or 32 bits)
rs, rd, rn:	Register field (4 bits specifying an 8-bit or 16-bit register. The symbols rs, rd, and rn correspond to operand symbols Rs, Rd,and Rn.)
ers, erd, ern, erm:	Register field (3 bits specifying an address register or 32-bit register. The symbols ers, erd, ern, and erm correspond to operand symbols ERs, ERd, ERn, and ERm.)

The register fields specify general registers as follows.

Address Register 32-Bit Register		16-Bit Register		8-Bit Register	
Register Field	**General Register**	**Register Field**	**General Register**	**Register Field**	**General Register**
000	ER0	0000	R0	0000	R0H
001	ER1	0001	R1	0001	R1H
•	•	•	•	•	•
•	•	•	•	•	•
•	•	•	•	•	•
111	ER7	0111	R7	0111	R7H
		1000	E0	1000	R0L
		1001	E1	1001	R1L
		•	•	•	•
		•	•	•	•
		•	•	•	•
		1111	E7	1111	R7L

A.3 Operation Code Map

Table A-3 shows the operation code map.

Table A-3 Operation Code Map (1)

Instruction code

1st byte		2nd byte	
AH	AL	BH	BL

Instruction when most significant bit of BH is 0.

Instruction when most significant bit of BH is 1.

AH \ AL	0	1	2	3	4	5	6	7	8	9	A	B	C	D	E	F
0	NOP	Table A.3(2)	STC / STMAC *	LDC / LDMAC *	ORC	XORC	ANDC	LDC	ADD		Table A.3(2)	Table A.3(2)	MOV		ADDX	Table A.3(2)
1	Table A.3(2)	Table A.3(2)	Table A.3(2)	Table A.3(2)	OR	XOR	AND	Table A.3(2)	SUB		Table A.3(2)	Table A.3(2)	CMP		SUBX	Table A.3(2)
2	MOV.B															
3																
4	BRA	BRN	BHI	BLS	BCC	BCS	BNE	BEQ	BVC	BVS	BPL	BMI	BGE	BLT	BGT	BLE
5	MULXU	DIVXU	MULXU	DIVXU	RTS	BSR	RTE	TRAPA	Table A.3(2)	JMP			BSR	JSR		
6	BSET	BNOT	BCLR	BTST	OR	XOR	AND	BST / BIST	MOV		Table A.3(2)	MOV				
7					BOR / BIOR	BXOR / BIXOR	BAND / BIAND	BLD / BILD	MOV	Table A.3(2)	Table A.3(2)	EEPMOV	Table A.3(3)			
8	ADD															
9	ADDX															
A	CMP															
B	SUBX															
C	OR															
D	XOR															
E	AND															
F	MOV															

Note: * Cannot be used in the H8S/2357 Group.

Table A-3 Operation Code Map (2)

Instruction code	1st byte		2nd byte	
	AH	AL	BH	BL

AH AL \ BH	0	1	2	3	4	5	6	7	8	9	A	B	C	D	E	F
01	MOV	LDM		STM	LDC / STC		MAC*		SLEEP		CLRMAC*		Table A.3(3)	Table A.3(3)	TAS	Table A.3(3)
0A	INC								ADD							
0B	ADDS					INC		INC	ADDS					INC		INC
0F	DAA								MOV							
10	SHLL			SHLL				SHLL	SHAL			SHAL				SHAL
11	SHLR			SHLR				SHLR	SHAR			SHAR				SHAR
12	ROTXL			ROTXL				ROTXL	ROTL			ROTL				ROTL
13	ROTXR			ROTXR				ROTXR	ROTR			ROTR				ROTR
17	NOT			NOT		EXTU		EXTU	NEG			NEG		EXTS		EXTS
1A	DEC								SUB							
1B	SUBS					DEC		DEC	SUBS					DEC		DEC
1F	DAS								CMP							
58	BRA	BRN	BHI	BLS	BCC	BCS	BNE	BEQ	BVC	BVS	BPL	BMI	BGE	BLT	BGT	BLE
6A	MOV	Table A.3(4)	MOV	Table A.3(4)	MOVFPE*				MOV		MOV		MOVTPE*			
79	MOV	ADD	CMP	SUB	OR	XOR	AND									
7A	MOV	ADD	CMP	SUB	OR	XOR	AND									

Note: * Cannot be used in the H8S/2357 Group.

Table A-3 Operation Code Map (3)

Instruction code	1st byte		2nd byte		3rd byte		4th byte	
	AH	AL	BH	BL	CH	CL	DH	DL

Instruction when most significant bit of DH is 0.
Instruction when most significant bit of DH is 1.

AH AL BH BL CH \ CL	0	1	2	3	4	5	6	7	8	9	A	B	C	D	E	F
01C05	MULXS		MULXS													
01D05		DIVXS		DIVXS												
01F06					OR	XOR	AND									
7Cr06 *1				BTST												
7Cr07 *1				BTST	BOR / BIOR	BXOR / BIXOR	BAND / BIAND	BLD / BILD								
7Dr06 *1	BSET	BNOT	BCLR					BST / BIST								
7Dr07 *1	BSET	BNOT	BCLR													
7Eaa6 *2				BTST												
7Eaa7 *2				BTST	BOR / BIOR	BXOR / BIXOR	BAND / BIAND	BLD / BILD								
7Faa6 *2	BSET	BNOT	BCLR					BST / BIST								
7Faa7 *2	BSET	BNOT	BCLR													

Notes: 1. r is the register specification field.
2. aa is the absolute address specification.

Table A-3 Operation Code Map (4)

Instruction code	1st byte		2nd byte		3rd byte		4th byte		5th byte		6th byte	
	AH	AL	BH	BL	CH	CL	DH	DL	EH	EL	FH	FL

Instruction when most significant bit of FH is 0.
Instruction when most significant bit of FH is 1.

EL / AHALBHBLCHCLDHDLEH	0	1	2	3	4	5	6	7	8	9	A	B	C	D	E	F
6A10aaaa6*				BTST												
6A10aaaa7*					BOR / BIOR	BXOR / BIXOR	BAND / BIAND	BLD / BILD								
6A18aaaa6*	BSET	BNOT	BCLR					BST / BIST								
6A18aaaa7*																

Instruction code	1st byte		2nd byte		3rd byte		4th byte		5th byte		6th byte		7th byte		8th byte	
	AH	AL	BH	BL	CH	CL	DH	DL	EH	EL	FH	FL	GH	GL	HH	HL

Instruction when most significant bit of HH is 0.
Instruction when most significant bit of HH is 1.

GL / AHALBHBL ... FHFLGH	0	1	2	3	4	5	6	7	8	9	A	B	C	D	E	F
6A30aaaaaaaa6*				BTST												
6A30aaaaaaaa7*					BOR / BIOR	BXOR / BIXOR	BAND / BIAND	BLD / BILD								
6A38aaaaaaaa6*	BSET	BNOT	BCLR					BST / BIST								
6A38aaaaaaaa7*																

Note: * aa is the absolute address specification.

A.4 Number of States Required for Instruction Execution

The tables in this section can be used to calculate the number of states required for instruction execution by the CPU. Table A-5 indicates the number of instruction fetch, data read/write, and other cycles occurring in each instruction. Table A-4 indicates the number of states required for each cycle. The number of states required for execution of an instruction can be calculated from these two tables as follows:

$$\text{Execution states} = I \times S_I + J \times S_J + K \times S_K + L \times S_L + M \times S_M + N \times S_N$$

Examples: Advanced mode, program code and stack located in external memory, on-chip supporting modules accessed in two states with 8-bit bus width, external devices accessed in three states with one wait state and 16-bit bus width.

1. BSET #0, @FFFFC7:8
   From table A-5:

   $I = L = 2, \quad J = K = M = N = 0$

   From table A-4:

   $S_I = 4, \quad S_L = 2$

   Number of states required for execution = $2 \times 4 + 2 \times 2 = 12$

2. JSR @@30
   From table A-5:

   $I = J = K = 2, \quad L = M = N = 0$

   From table A-4:

   $S_I = S_J = S_K = 4$

   Number of states required for execution = $2 \times 4 + 2 \times 4 + 2 \times 4 = 24$

Table A-4 Number of States per Cycle

			Access Conditions					
			On-Chip Supporting Module		External Device			
					8-Bit Bus		16-Bit Bus	
Cycle		**On-Chip Memory**	**8-Bit Bus**	**16-Bit Bus**	**2-State Access**	**3-State Access**	**2-State Access**	**3-State Access**
Instruction fetch	S_I	1	4	2	4	6 + 2m	2	3 + m
Branch address read	S_J							
Stack operation	S_K							
Byte data access	S_L		2		2	3 + m		
Word data access	S_M		4		4	6 + 2m		
Internal operation	S_N	1	1	1	1	1	1	1

Legend:
m: Number of wait states inserted into external device access

Table A-5 Number of Cycles in Instruction Execution

Instruction	Mnemonic	Instruction Fetch I	Branch Address Read J	Stack Operation K	Byte Data Access L	Word Data Access M	Internal Operation N
ADD	ADD.B #xx:8,Rd	1					
	ADD.B Rs,Rd	1					
	ADD.W #xx:16,Rd	2					
	ADD.W Rs,Rd	1					
	ADD.L #xx:32,ERd	3					
	ADD.L ERs,ERd	1					
ADDS	ADDS #1/2/4,ERd	1					
ADDX	ADDX #xx:8,Rd	1					
	ADDX Rs,Rd	1					
AND	AND.B #xx:8,Rd	1					
	AND.B Rs,Rd	1					
	AND.W #xx:16,Rd	2					
	AND.W Rs,Rd	1					
	AND.L #xx:32,ERd	3					
	AND.L ERs,ERd	2					
ANDC	ANDC #xx:8,CCR	1					
	ANDC #xx:8,EXR	2					
BAND	BAND #xx:3,Rd	1					
	BAND #xx:3,@ERd	2			1		
	BAND #xx:3,@aa:8	2			1		
	BAND #xx:3,@aa:16	3			1		
	BAND #xx:3,@aa:32	4			1		
Bcc	BRA d:8 (BT d:8)	2					
	BRN d:8 (BF d:8)	2					
	BHI d:8	2					
	BLS d:8	2					
	BCC d:8 (BHS d:8)	2					
	BCS d:8 (BLO d:8)	2					
	BNE d:8	2					
	BEQ d:8	2					
	BVC d:8	2					
	BVS d:8	2					
	BPL d:8	2					
	BMI d:8	2					
	BGE d:8	2					
	BLT d:8	2					
	BGT d:8	2					
	BLE d:8	2					
	BRA d:16 (BT d:16)	2					1
	BRN d:16 (BF d:16)	2					1
	BHI d:16	2					1

Instruction	Mnemonic	Instruction Fetch I	Branch Address Read J	Stack Operation K	Byte Data Access L	Word Data Access M	Internal Operation N
Bcc	BLS d:16	2					1
	BCC d:16 (BHS d:16)	2					1
	BCS d:16 (BLO d:16)	2					1
	BNE d:16	2					1
	BEQ d:16	2					1
	BVC d:16	2					1
	BVS d:16	2					1
	BPL d:16	2					1
	BMI d:16	2					1
	BGE d:16	2					1
	BLT d:16	2					1
	BGT d:16	2					1
	BLE d:16	2					1
BCLR	BCLR #xx:3,Rd	1					
	BCLR #xx:3,@ERd	2			2		
	BCLR #xx:3,@aa:8	2			2		
	BCLR #xx:3,@aa:16	3			2		
	BCLR #xx:3,@aa:32	4			2		
	BCLR Rn,Rd	1					
	BCLR Rn,@ERd	2			2		
	BCLR Rn,@aa:8	2			2		
	BCLR Rn,@aa:16	3			2		
	BCLR Rn,@aa:32	4			2		
BIAND	BIAND #xx:3,Rd	1					
	BIAND #xx:3,@ERd	2			1		
	BIAND #xx:3,@aa:8	2			1		
	BIAND #xx:3,@aa:16	3			1		
	BIAND #xx:3,@aa:32	4			1		
BILD	BILD #xx:3,Rd	1					
	BILD #xx:3,@ERd	2			1		
	BILD #xx:3,@aa:8	2			1		
	BILD #xx:3,@aa:16	3			1		
	BILD #xx:3,@aa:32	4			1		
BIOR	BIOR #xx:8,Rd	1					
	BIOR #xx:8,@ERd	2			1		
	BIOR #xx:8,@aa:8	2			1		
	BIOR #xx:8,@aa:16	3			1		
	BIOR #xx:8,@aa:32	4			1		
BIST	BIST #xx:3,Rd	1					
	BIST #xx:3,@ERd	2			2		
	BIST #xx:3,@aa:8	2			2		
	BIST #xx:3,@aa:16	3			2		
	BIST #xx:3,@aa:32	4			2		

Instruction	Mnemonic	Instruction Fetch I	Branch Address Read J	Stack Operation K	Byte Data Access L	Word Data Access M	Internal Operation N
BIXOR	BIXOR #xx:3,Rd	1					
	BIXOR #xx:3,@ERd	2			1		
	BIXOR #xx:3,@aa:8	2			1		
	BIXOR #xx:3,@aa:16	3			1		
	BIXOR #xx:3,@aa:32	4			1		
BLD	BLD #xx:3,Rd	1					
	BLD #xx:3,@ERd	2			1		
	BLD #xx:3,@aa:8	2			1		
	BLD #xx:3,@aa:16	3			1		
	BLD #xx:3,@aa:32	4			1		
BNOT	BNOT #xx:3,Rd	1					
	BNOT #xx:3,@ERd	2			2		
	BNOT #xx:3,@aa:8	2			2		
	BNOT #xx:3,@aa:16	3			2		
	BNOT #xx:3,@aa:32	4			2		
	BNOT Rn,Rd	1					
	BNOT Rn,@ERd	2			2		
	BNOT Rn,@aa:8	2			2		
	BNOT Rn,@aa:16	3			2		
	BNOT Rn,@aa:32	4			2		
BOR	BOR #xx:3,Rd	1					
	BOR #xx:3,@ERd	2			1		
	BOR #xx:3,@aa:8	2			1		
	BOR #xx:3,@aa:16	3			1		
	BOR #xx:3,@aa:32	4			1		
BSET	BSET #xx:3,Rd	1					
	BSET #xx:3,@ERd	2			2		
	BSET #xx:3,@aa:8	2			2		
	BSET #xx:3,@aa:16	3			2		
	BSET #xx:3,@aa:32	4			2		
	BSET Rn,Rd	1					
	BSET Rn,@ERd	2			2		
	BSET Rn,@aa:8	2			2		
	BSET Rn,@aa:16	3			2		
	BSET Rn,@aa:32	4			2		
BSR	BSR d:8 Advanced	2		2			
	BSR d:16 Advanced	2		2			1
BST	BST #xx:3,Rd	1					
	BST #xx:3,@ERd	2			2		
	BST #xx:3,@aa:8	2			2		
	BST #xx:3,@aa:16	3			2		
	BST #xx:3,@aa:32	4			2		

Instruction	Mnemonic	Instruction Fetch I	Branch Address Read J	Stack Operation K	Byte Data Access L	Word Data Access M	Internal Operation N
BTST	BTST #xx:3,Rd	1					
	BTST #xx:3,@ERd	2			1		
	BTST #xx:3,@aa:8	2			1		
	BTST #xx:3,@aa:16	3			1		
	BTST #xx:3,@aa:32	4			1		
	BTST Rn,Rd	1					
	BTST Rn,@ERd	2			1		
	BTST Rn,@aa:8	2			1		
	BTST Rn,@aa:16	3			1		
	BTST Rn,@aa:32	4			1		
BXOR	BXOR #xx:3,Rd	1					
	BXOR #xx:3,@ERd	2			1		
	BXOR #xx:3,@aa:8	2			1		
	BXOR #xx:3,@aa:16	3			1		
	BXOR #xx:3,@aa:32	4			1		
CLRMAC	CLRMAC	Cannot be used in the H8S/2357 Group					
CMP	CMP.B #xx:8,Rd	1					
	CMP.B Rs,Rd	1					
	CMP.W #xx:16,Rd	2					
	CMP.W Rs,Rd	1					
	CMP.L #xx:32,ERd	3					
	CMP.L ERs,ERd	1					
DAA	DAA Rd	1					
DAS	DAS Rd	1					
DEC	DEC.B Rd	1					
	DEC.W #1/2,Rd	1					
	DEC.L #1/2,ERd	1					
DIVXS	DIVXS.B Rs,Rd	2					11
	DIVXS.W Rs,ERd	2					19
DIVXU	DIVXU.B Rs,Rd	1					11
	DIVXU.W Rs,ERd	1					19
EEPMOV	EEPMOV.B	2			2n+2*2		
	EEPMOV.W	2			2n+2*2		
EXTS	EXTS.W Rd	1					
	EXTS.L ERd	1					
EXTU	EXTU.W Rd	1					
	EXTU.L ERd	1					
INC	INC.B Rd	1					
	INC.W #1/2,Rd	1					
	INC.L #1/2,ERd	1					

Instruction	Mnemonic	Instruction Fetch	Branch Address Read	Stack Operation	Byte Data Access	Word Data Access	Internal Operation
		I	J	K	L	M	N
JMP	JMP @ERn	2					
	JMP @aa:24	2					1
	JMP @@aa:8 Advanced	2	2				1
JSR	JSR @ERn Advanced	2		2			
	JSR @aa:24 Advanced	2		2			1
	JSR @@aa:8 Advanced	2	2	2			
LDC	LDC #xx:8,CCR	1					
	LDC #xx:8,EXR	2					
	LDC Rs,CCR	1					
	LDC Rs,EXR	1					
	LDC @ERs,CCR	2				1	
	LDC @ERs,EXR	2				1	
	LDC @(d:16,ERs),CCR	3				1	
	LDC @(d:16,ERs),EXR	3				1	
	LDC @(d:32,ERs),CCR	5				1	
	LDC @(d:32,ERs),EXR	5				1	
	LDC @ERs+,CCR	2				1	1
	LDC @ERs+,EXR	2				1	1
	LDC @aa:16,CCR	3				1	
	LDC @aa:16,EXR	3				1	
	LDC @aa:32,CCR	4				1	
	LDC @aa:32,EXR	4				1	
LDM	LDM.L @SP+, (ERn-ERn+1)	2		4			1
	LDM.L @SP+, (ERn-ERn+2)	2		6			1
	LDM.L @SP+, (ERn-ERn+3)	2		8			1
LDMAC	LDMAC ERs,MACH	Cannot be used in the H8S/2357 Group					
	LDMAC ERs,MACL						
MAC	MAC @ERn+,@ERm+	Cannot be used in the H8S/2357 Group					
MOV	MOV.B #xx:8,Rd	1					
	MOV.B Rs,Rd	1					
	MOV.B @ERs,Rd	1			1		
	MOV.B @(d:16,ERs),Rd	2			1		
	MOV.B @(d:32,ERs),Rd	4			1		
	MOV.B @ERs+,Rd	1			1		1
	MOV.B @aa:8,Rd	1			1		
	MOV.B @aa:16,Rd	2			1		
	MOV.B @aa:32,Rd	3			1		
	MOV.B Rs,@ERd	1			1		
	MOV.B Rs,@(d:16,ERd)	2			1		
	MOV.B Rs,@(d:32,ERd)	4			1		

Instruction	Mnemonic	Instruction Fetch I	Branch Address Read J	Stack Operation K	Byte Data Access L	Word Data Access M	Internal Operation N
MOV	MOV.B Rs,@-ERd	1			1		1
	MOV.B Rs,@aa:8	1			1		
	MOV.B Rs,@aa:16	2			1		
	MOV.B Rs,@aa:32	3			1		
	MOV.W #xx:16,Rd	2					
	MOV.W Rs,Rd	1					
	MOV.W @ERs,Rd	1				1	
	MOV.W @(d:16,ERs),Rd	2				1	
	MOV.W @(d:32,ERs),Rd	4				1	
	MOV.W @ERs+,Rd	1				1	1
	MOV.W @aa:16,Rd	2				1	
	MOV.W @aa:32,Rd	3				1	
	MOV.W Rs,@ERd	1				1	
	MOV.W Rs,@(d:16,ERd)	2				1	
	MOV.W Rs,@(d:32,ERd)	4				1	
	MOV.W Rs,@-ERd	1				1	1
	MOV.W Rs,@aa:16	2				1	
	MOV.W Rs,@aa:32	3				1	
	MOV.L #xx:32,ERd	3					
	MOV.L ERs,ERd	1					
	MOV.L @ERs,ERd	2				2	
	MOV.L @(d:16,ERs),ERd	3				2	
	MOV.L @(d:32,ERs),ERd	5				2	
	MOV.L @ERs+,ERd	2				2	1
	MOV.L @aa:16,ERd	3				2	
	MOV.L @aa:32,ERd	4				2	
	MOV.L ERs,@ERd	2				2	
	MOV.L ERs,@(d:16,ERd)	3				2	
	MOV.L ERs,@(d:32,ERd)	5				2	
	MOV.L ERs,@-ERd	2				2	1
	MOV.L ERs,@aa:16	3				2	
	MOV.L ERs,@aa:32	4				2	
MOVFPE	MOVFPE @:aa:16,Rd	Can not be used in the H8S/2357 Group					
MOVTPE	MOVTPE Rs,@:aa:16						
MULXS	MULXS.B Rs,Rd	2					11
	MULXS.W Rs,ERd	2					19
MULXU	MULXU.B Rs,Rd	1					11
	MULXU.W Rs,ERd	1					19
NEG	NEG.B Rd	1					
	NEG.W Rd	1					
	NEG.L ERd	1					
NOP	NOP	1					

Instruction	Mnemonic	Instruction Fetch I	Branch Address Read J	Stack Operation K	Byte Data Access L	Word Data Access M	Internal Operation N
NOT	NOT.B Rd	1					
	NOT.W Rd	1					
	NOT.L ERd	1					
OR	OR.B #xx:8,Rd	1					
	OR.B Rs,Rd	1					
	OR.W #xx:16,Rd	2					
	OR.W Rs,Rd	1					
	OR.L #xx:32,ERd	3					
	OR.L ERs,ERd	2					
ORC	ORC #xx:8,CCR	1					
	ORC #xx:8,EXR	2					
POP	POP.W Rn	1				1	1
	POP.L ERn	2				2	1
PUSH	PUSH.W Rn	1				1	1
	PUSH.L ERn	2				2	1
ROTL	ROTL.B Rd	1					
	ROTL.B #2,Rd	1					
	ROTL.W Rd	1					
	ROTL.W #2,Rd	1					
	ROTL.L ERd	1					
	ROTL.L #2,ERd	1					
ROTR	ROTR.B Rd	1					
	ROTR.B #2,Rd	1					
	ROTR.W Rd	1					
	ROTR.W #2,Rd	1					
	ROTR.L ERd	1					
	ROTR.L #2,ERd	1					
ROTXL	ROTXL.B Rd	1					
	ROTXL.B #2,Rd	1					
	ROTXL.W Rd	1					
	ROTXL.W #2,Rd	1					
	ROTXL.L ERd	1					
	ROTXL.L #2,ERd	1					
ROTXR	ROTXR.B Rd	1					
	ROTXR.B #2,Rd	1					
	ROTXR.W Rd	1					
	ROTXR.W #2,Rd	1					
	ROTXR.L ERd	1					
	ROTXR.L #2,ERd	1					
RTE	RTE	2		2/3*[1]			1
RTS	RTS Advanced	2		2			1

Instruction	Mnemonic	Instruction Fetch I	Branch Address Read J	Stack Operation K	Byte Data Access L	Word Data Access M	Internal Operation N
SHAL	SHAL.B Rd	1					
	SHAL.B #2,Rd	1					
	SHAL.W Rd	1					
	SHAL.W #2,Rd	1					
	SHAL.L ERd	1					
	SHAL.L #2,ERd	1					
SHAR	SHAR.B Rd	1					
	SHAR.B #2,Rd	1					
	SHAR.W Rd	1					
	SHAR.W #2,Rd	1					
	SHAR.L ERd	1					
	SHAR.L #2,ERd	1					
SHLL	SHLL.B Rd	1					
	SHLL.B #2,Rd	1					
	SHLL.W Rd	1					
	SHLL.W #2,Rd	1					
	SHLL.L ERd	1					
	SHLL.L #2,ERd	1					
SHLR	SHLR.B Rd	1					
	SHLR.B #2,Rd	1					
	SHLR.W Rd	1					
	SHLR.W #2,Rd	1					
	SHLR.L ERd	1					
	SHLR.L #2,ERd	1					
SLEEP	SLEEP	1					1
STC	STC.B CCR,Rd	1					
	STC.B EXR,Rd	1					
	STC.W CCR,@ERd	2				1	
	STC.W EXR,@ERd	2				1	
	STC.W CCR,@(d:16,ERd)	3				1	
	STC.W EXR,@(d:16,ERd)	3				1	
	STC.W CCR,@(d:32,ERd)	5				1	
	STC.W EXR,@(d:32,ERd)	5				1	
	STC.W CCR,@-ERd	2				1	1
	STC.W EXR,@-ERd	2				1	1
	STC.W CCR,@aa:16	3				1	
	STC.W EXR,@aa:16	3				1	
	STC.W CCR,@aa:32	4				1	
	STC.W EXR,@aa:32	4				1	

Instruction	Mnemonic	Instruction Fetch I	Branch Address Read J	Stack Operation K	Byte Data Access L	Word Data Access M	Internal Operation N
STM	STM.L (ERn-ERn+1), @-SP	2		4			1
	STM.L (ERn-ERn+2), @-SP	2		6			1
	STM.L (ERn-ERn+3), @-SP	2		8			1
STMAC	STMAC MACH,ERd	Cannot be used in the H8S/2357 Group					
	STMAC MACL,ERd						
SUB	SUB.B Rs,Rd	1					
	SUB.W #xx:16,Rd	2					
	SUB.W Rs,Rd	1					
	SUB.L #xx:32,ERd	3					
	SUB.L ERs,ERd	1					
SUBS	SUBS #1/2/4,ERd	1					
SUBX	SUBX #xx:8,Rd	1					
	SUBX Rs,Rd	1					
TAS	TAS @ERd*3	2			2		
TRAPA	TRAPA #x:2 Advanced	2	2	2/3*1			2
XOR	XOR.B #xx:8,Rd	1					
	XOR.B Rs,Rd	1					
	XOR.W #xx:16,Rd	2					
	XOR.W Rs,Rd	1					
	XOR.L #xx:32,ERd	3					
	XOR.L ERs,ERd	2					
XORC	XORC #xx:8,CCR	1					
	XORC #xx:8,EXR	2					

Notes: 1. 2 when EXR is invalid, 3 when EXR is valid.
2. When n bytes of data are transferred.
3. Only register ER0, ER1, ER4, or ER5 should be used when using the TAS instruction.

A.5 Bus States during Instruction Execution

Table A-6 indicates the types of cycles that occur during instruction execution by the CPU. See table A-4 for the number of states per cycle.

How to Read the Table:

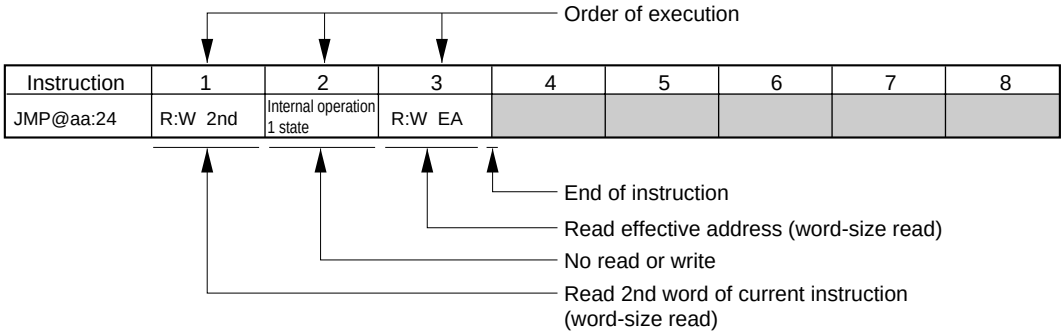

Legend	
R:B	Byte-size read
R:W	Word-size read
W:B	Byte-size write
W:W	Word-size write
:M	Transfer of the bus is not performed immediately after this cycle
2nd	Address of 2nd word (3rd and 4th bytes)
3rd	Address of 3rd word (5th and 6th bytes)
4th	Address of 4th word (7th and 8th bytes)
5th	Address of 5th word (9th and 10th bytes)
NEXT	Address of next instruction
EA	Effective address
VEC	Vector address

Figure A-1 shows timing waveforms for the address bus and the $\overline{RD}$, $\overline{HWR}$, and $\overline{LWR}$ signals during execution of the above instruction with an 8-bit bus, using three-state access with no wait states.

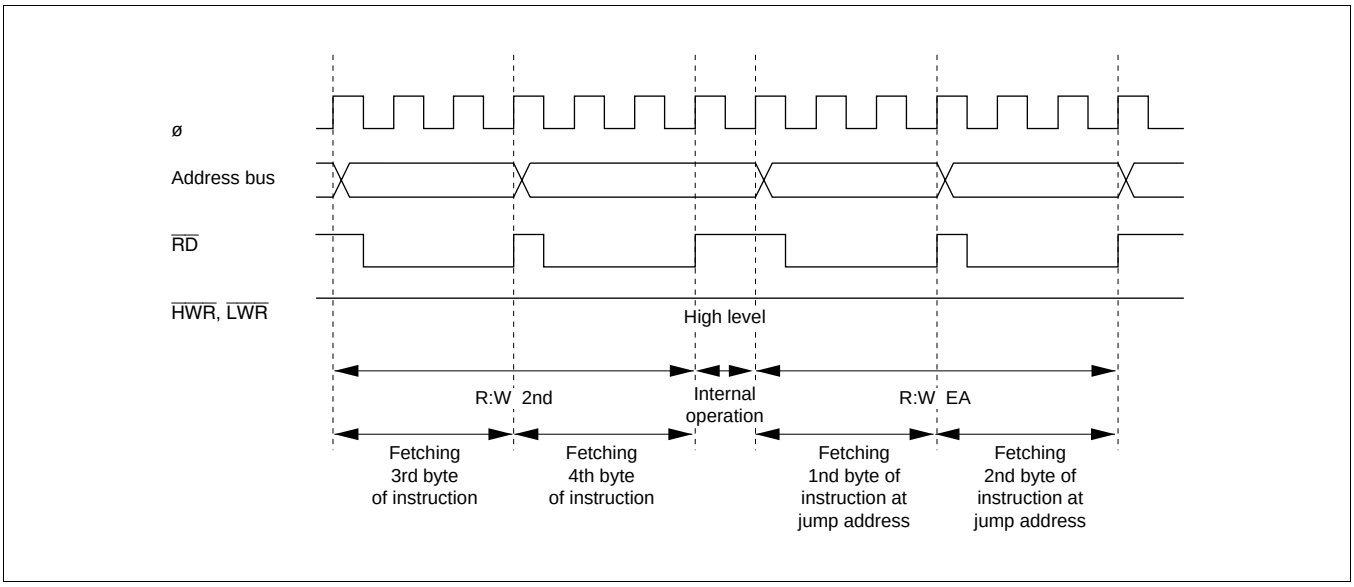

Figure A-1 Address Bus, $\overline{RD}$, $\overline{HWR}$, and $\overline{LWR}$ Timing (8-Bit Bus, Three-State Access, No Wait States)

Table A-6 Instruction Execution Cycles

Instruction	1	2	3	4	5	6	7	8	9
ADD.B #xx:8,Rd	R:W NEXT								
ADD.B Rs,Rd	R:W NEXT								
ADD.W #xx:16,Rd	R:W 2nd	R:W NEXT							
ADD.W Rs,Rd	R:W NEXT								
ADD.L #xx:32,ERd	R:W 2nd	R:W 3rd	R:W NEXT						
ADD.L ERs,ERd	R:W NEXT								
ADDS #1/2/4,ERd	R:W NEXT								
ADDX #xx:8,Rd	R:W NEXT								
ADDX Rs,Rd	R:W NEXT								
AND.B #xx:8,Rd	R:W NEXT								
AND.B Rs,Rd	R:W NEXT								
AND.W #xx:16,Rd	R:W 2nd	R:W NEXT							
AND.W Rs,Rd	R:W NEXT								
AND.L #xx:32,ERd	R:W 2nd	R:W 3rd	R:W NEXT						
AND.L ERs,ERd	R:W 2nd	R:W NEXT							
ANDC #xx:8,CCR	R:W NEXT								
ANDC #xx:8,EXR	R:W 2nd	R:W NEXT							
BAND #xx:3,Rd	R:W NEXT								
BAND #xx:3,@ERd	R:W 2nd	R:B EA	R:W:M NEXT						
BAND #xx:3,@aa:8	R:W 2nd	R:B EA	R:W:M NEXT						
BAND #xx:3,@aa:16	R:W 2nd	R:W 3rd	R:B EA	R:W:M NEXT					
BAND #xx:3,@aa:32	R:W 2nd	R:W 3rd	R:W 4th	R:B EA	R:W:M NEXT				
BRA d:8 (BT d:8)	R:W NEXT	R:W EA							
BRN d:8 (BF d:8)	R:W NEXT	R:W EA							
BHI d:8	R:W NEXT	R:W EA							
BLS d:8	R:W NEXT	R:W EA							
BCC d:8 (BHS d:8)	R:W NEXT	R:W EA							
BCS d:8 (BLO d:8)	R:W NEXT	R:W EA							
BNE d:8	R:W NEXT	R:W EA							
BEQ d:8	R:W NEXT	R:W EA							
BVC d:8	R:W NEXT	R:W EA							
BVS d:8	R:W NEXT	R:W EA							
BPL d:8	R:W NEXT	R:W EA							
BMI d:8	R:W NEXT	R:W EA							
BGE d:8	R:W NEXT	R:W EA							
BLT d:8	R:W NEXT	R:W EA							
BGT d:8	R:W NEXT	R:W EA							

Instruction	1	2	3	4	5	6	7	8	9
BLE d:8	R:W NEXT	R:W EA							
BRA d:16 (BT d:16)	R:W 2nd	Internal operation, 1 state	R:W EA						
BRN d:16 (BF d:16)	R:W 2nd	Internal operation, 1 state	R:W EA						
BHI d:16	R:W 2nd	Internal operation, 1 state	R:W EA						
BLS d:16	R:W 2nd	Internal operation, 1 state	R:W EA						
BCC d:16 (BHS d:16)	R:W 2nd	Internal operation, 1 state	R:W EA						
BCS d:16 (BLO d:16)	R:W 2nd	Internal operation, 1 state	R:W EA						
BNE d:16	R:W 2nd	Internal operation, 1 state	R:W EA						
BEQ d:16	R:W 2nd	Internal operation, 1 state	R:W EA						
BVC d:16	R:W 2nd	Internal operation, 1 state	R:W EA						
BVS d:16	R:W 2nd	Internal operation, 1 state	R:W EA						
BPL d:16	R:W 2nd	Internal operation, 1 state	R:W EA						
BMI d:16	R:W 2nd	Internal operation, 1 state	R:W EA						
BGE d:16	R:W 2nd	Internal operation, 1 state	R:W EA						
BLT d:16	R:W 2nd	Internal operation, 1 state	R:W EA						
BGT d:16	R:W 2nd	Internal operation, 1 state	R:W EA						
BLE d:16	R:W 2nd	Internal operation, 1 state	R:W EA						
BCLR #xx:3,Rd	R:W NEXT								
BCLR #xx:3,@ERd	R:W 2nd	R:B:M EA	R:W:M NEXT	W:B EA					
BCLR #xx:3,@aa:8	R:W 2nd	R:B:M EA	R:W:M NEXT	W:B EA					
BCLR #xx:3,@aa:16	R:W 2nd	R:W 3rd	R:B:M EA	R:W:M NEXT	W:B EA				

Instruction	1	2	3	4	5	6	7	8	9
BCLR #xx:3,@aa:32	R:W 2nd	R:W 3rd	R:W 4th	R:B:M EA	R:W:M NEXT	W:B EA			
BCLR Rn,Rd	R:W NEXT								
BCLR Rn,@ERd	R:W 2nd	R:B:M EA	R:W:M NEXT	W:B EA					
BCLR Rn,@aa:8	R:W 2nd	R:B:M EA	R:W:M NEXT	W:B EA					
BCLR Rn,@aa:16	R:W 2nd	R:W 3rd	R:B:M EA	R:W:M NEXT	W:B EA				
BCLR Rn,@aa:32	R:W 2nd	R:W 3rd	R:W 4th	R:B:M EA	R:W:M NEXT	W:B EA			
BIAND #xx:3,Rd	R:W NEXT								
BIAND #xx:3,@ERd	R:W 2nd	R:B EA	R:W:M NEXT						
BIAND #xx:3,@aa:8	R:W 2nd	R:B EA	R:W:M NEXT						
BIAND #xx:3,@aa:16	R:W 2nd	R:W 3rd	R:B EA	R:W:M NEXT					
BIAND #xx:3,@aa:32	R:W 2nd	R:W 3rd	R:W 4th	R:B EA	R:W:M NEXT				
BILD #xx:3,Rd	R:W NEXT								
BILD #xx:3,@ERd	R:W 2nd	R:B EA	R:W:M NEXT						
BILD #xx:3,@aa:8	R:W 2nd	R:B EA	R:W:M NEXT						
BILD #xx:3,@aa:16	R:W 2nd	R:W 3rd	R:B EA	R:W:M NEXT					
BILD #xx:3,@aa:32	R:W 2nd	R:W 3rd	R:W 4th	R:B EA	R:W:M NEXT				
BIOR #xx:3,Rd	R:W NEXT								
BIOR #xx:3,@ERd	R:W 2nd	R:B EA	R:W:M NEXT						
BIOR #xx:3,@aa:8	R:W 2nd	R:B EA	R:W:M NEXT						
BIOR #xx:3,@aa:16	R:W 2nd	R:W 3rd	R:B EA	R:W:M NEXT					
BIOR #xx:3,@aa:32	R:W 2nd	R:W 3rd	R:W 4th	R:B EA	R:W:M NEXT				
BIST #xx:3,Rd	R:W NEXT								
BIST #xx:3,@ERd	R:W 2nd	R:B:M EA	R:W:M NEXT	W:B EA					
BIST #xx:3,@aa:8	R:W 2nd	R:B:M EA	R:W:M NEXT	W:B EA					
BIST #xx:3,@aa:16	R:W 2nd	R:W 3rd	R:B:M EA	R:W:M NEXT	W:B EA				
BIST #xx:3,@aa:32	R:W 2nd	R:W 3rd	R:W 4th	R:B:M EA	R:W:M NEXT	W:B EA			
BIXOR #xx:3,Rd	R:W NEXT								
BIXOR #xx:3,@ERd	R:W 2nd	R:B EA	R:W:M NEXT						
BIXOR #xx:3,@aa:8	R:W 2nd	R:B EA	R:W:M NEXT						
BIXOR #xx:3,@aa:16	R:W 2nd	R:W 3rd	R:B EA	R:W:M NEXT					
BIXOR #xx:3,@aa:32	R:W 2nd	R:W 3rd	R:W 4th	R:B EA	R:W:M NEXT				
BLD #xx:3,Rd	R:W NEXT								
BLD #xx:3,@ERd	R:W 2nd	R:B EA	R:W:M NEXT						
BLD #xx:3,@aa:8	R:W 2nd	R:B EA	R:W:M NEXT						
BLD #xx:3,@aa:16	R:W 2nd	R:W 3rd	R:B EA	R:W:M NEXT					
BLD #xx:3,@aa:32	R:W 2nd	R:W 3rd	R:W 4th	R:B EA	R:W:M NEXT				
BNOT #xx:3,Rd	R:W NEXT								

Instruction		1	2	3	4	5	6	7	8	9
BNOT #xx:3,@ERd		R:W 2nd	R:B:M EA	R:W:M NEXT	W:B EA					
BNOT #xx:3,@aa:8		R:W 2nd	R:B:M EA	R:W:M NEXT	W:B EA					
BNOT #xx:3,@aa:16		R:W 2nd	R:W 3rd	R:B:M EA	R:W:M NEXT	W:B EA				
BNOT #xx:3,@aa:32		R:W 2nd	R:W 3rd	R:W 4th	R:B:M EA	R:W:M NEXT	W:B EA			
BNOT Rn,Rd		R:W NEXT								
BNOT Rn,@ERd		R:W 2nd	R:B:M EA	R:W:M NEXT	W:B EA					
BNOT Rn,@aa:8		R:W 2nd	R:B:M EA	R:W:M NEXT	W:B EA					
BNOT Rn,@aa:16		R:W 2nd	R:W 3rd	R:B:M EA	R:W:M NEXT	W:B EA				
BNOT Rn,@aa:32		R:W 2nd	R:W 3rd	R:W 4th	R:B:M EA	R:W:M NEXT	W:B EA			
BOR #xx:3,Rd		R:W NEXT								
BOR #xx:3,@ERd		R:W 2nd	R:B EA	R:W:M NEXT						
BOR #xx:3,@aa:8		R:W 2nd	R:B EA	R:W:M NEXT						
BOR #xx:3,@aa:16		R:W 2nd	R:W 3rd	R:B EA	R:W:M NEXT					
BOR #xx:3,@aa:32		R:W 2nd	R:W 3rd	R:W 4th	R:B EA	R:W:M NEXT				
BSET #xx:3,Rd		R:W NEXT								
BSET #xx:3,@ERd		R:W 2nd	R:B:M EA	R:W:M NEXT	W:B EA					
BSET #xx:3,@aa:8		R:W 2nd	R:B:M EA	R:W:M NEXT	W:B EA					
BSET #xx:3,@aa:16		R:W 2nd	R:W 3rd	R:B:M EA	R:W:M NEXT	W:B EA				
BSET #xx:3,@aa:32		R:W 2nd	R:W 3rd	R:W 4th	R:B:M EA	R:W:M NEXT	W:B EA			
BSET Rn,Rd		R:W NEXT								
BSET Rn,@ERd		R:W 2nd	R:B:M EA	R:W:M NEXT	W:B EA					
BSET Rn,@aa:8		R:W 2nd	R:B:M EA	R:W:M NEXT	W:B EA					
BSET Rn,@aa:16		R:W 2nd	R:W 3rd	R:B:M EA	R:W:M NEXT	W:B EA				
BSET Rn,@aa:32		R:W 2nd	R:W 3rd	R:W 4th	R:B:M EA	R:W:M NEXT	W:B EA			
BSR d:8	Advanced	R:W NEXT	R:W EA	W:W:M stack (H)	W:W stack (L)					
BSR d:16	Advanced	R:W 2nd	Internal operation, 1 state	R:W EA	W:W:M stack (H)	W:W stack (L)				
BST #xx:3,Rd		R:W NEXT								
BST #xx:3,@ERd		R:W 2nd	R:B:M EA	R:W:M NEXT	W:B EA					
BST #xx:3,@aa:8		R:W 2nd	R:B:M EA	R:W:M NEXT	W:B EA					
BST #xx:3,@aa:16		R:W 2nd	R:W 3rd	R:B:M EA	R:W:M NEXT	W:B EA				
BST #xx:3,@aa:32		R:W 2nd	R:W 3rd	R:W 4th	R:B:M EA	R:W:M NEXT	W:B EA			
BTST #xx:3,Rd		R:W NEXT								
BTST #xx:3,@ERd		R:W 2nd	R:B EA	R:W:M NEXT						

Instruction	1	2	3	4	5	6	7	8	9
BTST #xx:3,@aa:8	R:W 2nd	R:B EA	R:W:M NEXT						
BTST #xx:3,@aa:16	R:W 2nd	R:W 3rd	R:B EA	R:W:M NEXT					
BTST #xx:3,@aa:32	R:W 2nd	R:W 3rd	R:W 4th	R:B EA	R:W:M NEXT				
BTST Rn,Rd	R:W NEXT								
BTST Rn,@ERd	R:W 2nd	R:B EA	R:W:M NEXT						
BTST Rn,@aa:8	R:W 2nd	R:B EA	R:W:M NEXT						
BTST Rn,@aa:16	R:W 2nd	R:W 3rd	R:B EA	R:W:M NEXT					
BTST Rn,@aa:32	R:W 2nd	R:W 3rd	R:W 4th	R:B EA	R:W:M NEXT				
BXOR #xx:3,Rd	R:W NEXT								
BXOR #xx:3,@ERd	R:W 2nd	R:B EA	R:W:M NEXT						
BXOR #xx:3,@aa:8	R:W 2nd	R:B EA	R:W:M NEXT						
BXOR #xx:3,@aa:16	R:W 2nd	R:W 3rd	R:B EA	R:W:M NEXT					
BXOR #xx:3,@aa:32	R:W 2nd	R:W 3rd	R:W 4th	R:B EA	R:W:M NEXT				
CLRMAC	Cannot be used in the H8S/2357 Group								
CMP.B #xx:8,Rd	R:W NEXT								
CMP.B Rs,Rd	R:W NEXT								
CMP.W #xx:16,Rd	R:W 2nd	R:W NEXT							
CMP.W Rs,Rd	R:W NEXT								
CMP.L #xx:32,ERd	R:W 2nd	R:W 3rd	R:W NEXT						
CMP.L ERs,ERd	R:W NEXT								
DAA Rd	R:W NEXT								
DAS Rd	R:W NEXT								
DEC.B Rd	R:W NEXT								
DEC.W #1/2,Rd	R:W NEXT								
DEC.L #1/2,ERd	R:W NEXT								
DIVXS.B Rs,Rd	R:W 2nd	R:W NEXT	Internal operation, 11 states						
DIVXS.W Rs,ERd	R:W 2nd	R:W NEXT	Internal operation, 19 states						
DIVXU.B Rs,Rd	R:W NEXT	Internal operation, 11 states							
DIVXU.W Rs,ERd	R:W NEXT	Internal operation, 19 states							
EEPMOV.B	R:W 2nd	R:B EAs*1	R:B EAd*1	R:B EAs*2	W:B EAd*2	R:W NEXT			
EEPMOV.W	R:W 2nd	R:B EAs*1	R:B EAd*1	R:B EAs*2	W:B EAd*2	R:W NEXT			
EXTS.W Rd	R:W NEXT			← Repeated n times*2 →					
EXTS.L ERd	R:W NEXT								
EXTU.W Rd	R:W NEXT								
EXTU.L ERd	R:W NEXT								
INC.B Rd	R:W NEXT								

Instruction		1	2	3	4	5	6	7	8	9
INC.W #1/2,Rd		R:W NEXT								
INC.L #1/2,ERd		R:W NEXT								
JMP @ERn		R:W NEXT	R:W EA							
JMP @aa:24		R:W 2nd	Internal operation, 1 state	R:W EA						
JMP @@aa:8	Advanced	R:W NEXT	R:W:M aa:8	R:W aa:8	Internal operation, 1 state	R:W EA				
JSR @ERn	Advanced	R:W NEXT	R:W EA	W:W:M stack (H)	W:W stack (L)					
JSR @aa:24	Advanced	R:W 2nd	Internal operation, 1 state	R:W EA	W:W:M stack (H)	W:W stack (L)				
JSR @@aa:8	Advanced	R:W NEXT	R:W:M aa:8	R:W aa:8	W:W:M stack (H)	W:W stack (L)	R:W EA			
LDC #xx:8,CCR		R:W NEXT								
LDC #xx:8,EXR		R:W 2nd	R:W NEXT							
LDC Rs,CCR		R:W NEXT								
LDC Rs,EXR		R:W NEXT								
LDC @ERs,CCR		R:W 2nd	R:W NEXT	R:W EA						
LDC @ERs,EXR		R:W 2nd	R:W NEXT	R:W EA						
LDC @(d:16,ERs),CCR		R:W 2nd	R:W 3rd	R:W NEXT	R:W EA					
LDC @(d:16,ERs),EXR		R:W 2nd	R:W 3rd	R:W NEXT	R:W EA					
LDC @(d:32,ERs),CCR		R:W 2nd	R:W 3rd	R:W 4th	R:W 5th	R:W NEXT	R:W EA			
LDC @(d:32,ERs),EXR		R:W 2nd	R:W 3rd	R:W 4th	R:W 5th	R:W NEXT	R:W EA			
LDC @ERs+,CCR		R:W 2nd	R:W NEXT	Internal operation, 1 state	R:W EA					
LDC @ERs+,EXR		R:W 2nd	R:W NEXT	Internal operation, 1 state	R:W EA					
LDC @aa:16,CCR		R:W 2nd	R:W 3rd	R:W NEXT	R:W EA					
LDC @aa:16,EXR		R:W 2nd	R:W 3rd	R:W NEXT	R:W EA					
LDC @aa:32,CCR		R:W 2nd	R:W 3rd	R:W 4th	R:W NEXT	R:W EA				
LDC @aa:32,EXR		R:W 2nd	R:W 3rd	R:W 4th	R:W NEXT	R:W EA				
LDM.L @SP+, (ERn–ERn+1)		R:W 2nd	R:W:M NEXT	Internal operation, 1 state	R:W:M stack (H)*3	R:W stack (L)*3				

Instruction	1	2	3	4	5	6	7	8	9
LDM.L @SP+,(ERn–ERn+2)	R:W 2nd	R:W NEXT	Internal operation, 1 state	R:W:M stack (H)*3	R:W stack (L)*3				
LDM.L @SP+,(ERn–ERn+3)	R:W 2nd	R:W NEXT	Internal operation, 1 state	R:W:M stack (H)*3	R:W stack (L)*3				
LDMAC ERs,MACH	Cannot be used in the H8S/2357 Group								
LDMAC ERs,MACL									
MAC @ERn+,@ERm+	R:W 2nd	R:W NEXT	R:W EAn	R:W EAm					
MOV.B #xx:8,Rd	R:W NEXT								
MOV.B Rs,Rd	R:W NEXT								
MOV.B @ERs,Rd	R:W NEXT	R:B EA							
MOV.B @(d:16,ERs),Rd	R:W 2nd	R:W NEXT	R:B EA						
MOV.B @(d:32,ERs),Rd	R:W 2nd	R:W 3rd	R:W 4th	R:W NEXT	R:B EA				
MOV.B @ERs+,Rd	R:W NEXT	Internal operation, 1 state	R:B EA						
MOV.B @aa:8,Rd	R:W NEXT	R:B EA							
MOV.B @aa:16,Rd	R:W 2nd	R:W NEXT	R:B EA						
MOV.B @aa:32,Rd	R:W 2nd	R:W 3rd	R:W NEXT	R:B EA					
MOV.B Rs,@ERd	R:W NEXT	W:B EA							
MOV.B Rs,@(d:16,ERd)	R:W 2nd	R:W NEXT	W:B EA						
MOV.B Rs,@(d:32,ERd)	R:W 2nd	R:W 3rd	R:W 4th	R:W NEXT	W:B EA				
MOV.B Rs,@–ERd	R:W NEXT	Internal operation, 1 state	W:B EA						
MOV.B Rs,@aa:8	R:W NEXT	W:B EA							
MOV.B Rs,@aa:16	R:W 2nd	R:W NEXT	W:B EA						
MOV.B Rs,@aa:32	R:W 2nd	R:W 3rd	R:W NEXT	W:B EA					
MOV.W #xx:16,Rd	R:W 2nd	R:W NEXT							
MOV.W Rs,Rd	R:W NEXT								
MOV.W @ERs,Rd	R:W NEXT	R:W EA							
MOV.W @(d:16,ERs),Rd	R:W 2nd	R:W NEXT	R:W EA						
MOV.W @(d:32,ERs),Rd	R:W 2nd	R:W 3rd	R:W 4th	R:W NEXT	R:W EA				
MOV.W @ERs+, Rd	R:W NEXT	Internal operation, 1 state	R:W EA						
MOV.W @aa:16,Rd	R:W 2nd	R:W NEXT	R:W EA						
MOV.W @aa:32,Rd	R:W 2nd	R:W 3rd	R:W NEXT	R:B EA					
MOV.W Rs,@ERd	R:W NEXT	W:W EA							

Instruction	1	2	3	4	5	6	7	8	9
MOV.W Rs,@(d:16,ERd)	R:W 2nd	R:W NEXT	W:W EA						
MOV.W Rs,@(d:32,ERd)	R:W 2nd	R:W 3rd	R:E 4th	R:W NEXT	W:W EA				
MOV.W Rs,@–ERd	R:W NEXT	Internal operation, 1 state	W:W EA						
MOV.W Rs,@aa:16	R:W 2nd	R:W NEXT	W:W EA						
MOV.W Rs,@aa:32	R:W 2nd	R:W 3rd	R:W NEXT	W:W EA					
MOV.L #xx:32,ERd	R:W 2nd	R:W 3rd	R:W NEXT						
MOV.L ERs,ERd	R:W NEXT								
MOV.L @ERs,ERd	R:W 2nd	R:W:M NEXT	R:W:M EA	R:W EA+2					
MOV.L @(d:16,ERs),ERd	R:W 2nd	R:W:M 3rd	R:W NEXT	R:W:M EA	R:W EA+2				
MOV.L @(d:32,ERs),ERd	R:W 2nd	R:W:M 3rd	R:W:M 4th	R:W 5th	R:W NEXT	R:W:M EA	R:W EA+2		
MOV.L @ERs+,ERd	R:W 2nd	R:W:M NEXT	Internal operation, 1 state	R:W:M EA	R:W EA+2				
MOV.L @aa:16,ERd	R:W 2nd	R:W:M 3rd	R:W NEXT	R:W:M EA	R:W EA+2				
MOV.L @aa:32,ERd	R:W 2nd	R:W:M 3rd	R:W 4th	R:W NEXT	R:W:M EA	R:W EA+2			
MOV.L ERs,@ERd	R:W 2nd	R:W:M NEXT	W:W:M EA	W:W EA+2					
MOV.L ERs,@(d:16,ERd)	R:W 2nd	R:W:M 3rd	R:W NEXT	W:W:M EA	W:W EA+2				
MOV.L ERs,@(d:32,ERd)	R:W 2nd	R:W:M 3rd	R:W:M 4th	R:W 5th	R:W NEXT	W:W:M EA	W:W EA+2		
MOV.L ERs,@–ERd	R:W 2nd	R:W:M NEXT	Internal operation, 1 state	W:W:M EA	W:W EA+2				
MOV.L ERs,@aa:16	R:W 2nd	R:W:M 3rd	R:W NEXT	W:W:M EA	W:W EA+2				
MOV.L ERs,@aa:32	R:W 2nd	R:W:M 3rd	R:W 4th	R:W NEXT	W:W:M EA	W:W EA+2			
MOVFPE @aa:16,Rd	Cannot be used in the H8S/2357 Group								
MOVTPE Rs,@aa:16									
MULXS.B Rs,Rd	R:W 2nd	R:W NEXT	Internal operation, 11 states						
MULXS.W Rs,ERd	R:W 2nd	R:W NEXT	Internal operation, 19 states						
MULXU.B Rs,Rd	R:W NEXT	Internal operation, 11 states							
MULXU.W Rs,ERd	R:W NEXT	Internal operation, 19 states							
NEG.B Rd	R:W NEXT								
NEG.W Rd	R:W NEXT								
NEG.L ERd	R:W NEXT								
NOP	R:W NEXT								
NOT.B Rd	R:W NEXT								
NOT.W Rd	R:W NEXT								
NOT.L ERd	R:W NEXT								
OR.B #xx:8,Rd	R:W NEXT								
OR.B Rs,Rd	R:W NEXT								

Instruction	1	2	3	4	5	6	7	8	9
OR.W #xx:16,Rd	R:W 2nd	R:W NEXT							
OR.W Rs,Rd	R:W NEXT								
OR.L #xx:32,ERd	R:W 2nd	R:W 3rd	R:W NEXT						
OR.L ERs,ERd	R:W 2nd	R:W NEXT							
ORC #xx:8,CCR	R:W NEXT								
ORC #xx:8,EXR	R:W 2nd	R:W NEXT							
POP.W Rn	R:W NEXT	Internal operation, 1 state	R:W EA						
POP.L ERn	R:W 2nd	R:W:M NEXT	Internal operation, 1 state	R:W:M EA	R:W EA+2				
PUSH.W Rn	R:W NEXT	Internal operation, 1 state	W:W EA						
PUSH.L ERn	R:W 2nd	R:W:M NEXT	Internal operation, 1 state	W:W:M EA	W:W EA+2				
ROTL.B Rd	R:W NEXT								
ROTL.B #2,Rd	R:W NEXT								
ROTL.W Rd	R:W NEXT								
ROTL.W #2,Rd	R:W NEXT								
ROTL.L ERd	R:W NEXT								
ROTL.L #2,ERd	R:W NEXT								
ROTR.B Rd	R:W NEXT								
ROTR.B #2,Rd	R:W NEXT								
ROTR.W Rd	R:W NEXT								
ROTR.W #2,Rd	R:W NEXT								
ROTR.L ERd	R:W NEXT								
ROTR.L #2,ERd	R:W NEXT								
ROTXL.B Rd	R:W NEXT								
ROTXL.B #2,Rd	R:W NEXT								
ROTXL.W Rd	R:W NEXT								
ROTXL.W #2,Rd	R:W NEXT								
ROTXL.L ERd	R:W NEXT								
ROTXL.L #2,ERd	R:W NEXT								
ROTXR.B Rd	R:W NEXT								
ROTXR.B #2,Rd	R:W NEXT								
ROTXR.W Rd	R:W NEXT								
ROTXR.W #2,Rd	R:W NEXT								
ROTXR.L ERd	R:W NEXT								

Instruction		1	2	3	4	5	6	7	8	9
ROTXR.L #2,ERd		R:W NEXT								
RTE		R:W NEXT	R:W stack (EXR)	R:W stack (H)	R:W stack (L)	Internal operation, 1 state	R:W*4			
RTS	Advanced	R:W NEXT	R:W:M stack (H)	R:W stack (L)	Internal operation, 1 state	R:W*4				
SHAL.B Rd		R:W NEXT								
SHAL.B #2,Rd		R:W NEXT								
SHAL.W Rd		R:W NEXT								
SHAL.W #2,Rd		R:W NEXT								
SHAL.L ERd		R:W NEXT								
SHAL.L #2,ERd		R:W NEXT								
SHAR.B Rd		R:W NEXT								
SHAR.B #2,Rd		R:W NEXT								
SHAR.W Rd		R:W NEXT								
SHAR.W #2,Rd		R:W NEXT								
SHAR.L ERd		R:W NEXT								
SHAR.L #2,ERd		R:W NEXT								
SHLL.B Rd		R:W NEXT								
SHLL.B #2,Rd		R:W NEXT								
SHLL.W Rd		R:W NEXT								
SHLL.W #2,Rd		R:W NEXT								
SHLL.L ERd		R:W NEXT								
SHLL.L #2,ERd		R:W NEXT								
SHLR.B Rd		R:W NEXT								
SHLR.B #2,Rd		R:W NEXT								
SHLR.W Rd		R:W NEXT								
SHLR.W #2,Rd		R:W NEXT								
SHLR.L ERd		R:W NEXT								
SHLR.L #2,ERd		R:W NEXT								
SLEEP		R:W NEXT	Internal operation:M							
STC CCR,Rd		R:W NEXT								
STC EXR,Rd		R:W NEXT								
STC CCR,@ERd		R:W 2nd	R:W NEXT	W:W EA						
STC EXR,@ERd		R:W 2nd	R:W NEXT	W:W EA						
STC CCR,@(d:16,ERd)		R:W 2nd	R:W 3rd	R:W NEXT	W:W EA					

Instruction		1	2	3	4	5	6	7	8	9
STC EXR,@(d:16,ERd)		R:W 2nd	R:W 3rd	R:W NEXT	W:W EA					
STC CCR,@(d:32,ERd)		R:W 2nd	R:W 3rd	R:W 4th	R:W 5th	R:W NEXT	W:W EA			
STC EXR,@(d:32,ERd)		R:W 2nd	R:W 3rd	R:W 4th	R:W 5th	R:W NEXT	W:W EA			
STC CCR,@–ERd		R:W 2nd	R:W NEXT	Internal operation, 1 state	W:W EA					
STC EXR,@–ERd		R:W 2nd	R:W NEXT	Internal operation, 1 state	W:W EA					
STC CCR,@aa:16		R:W 2nd	R:W 3rd	R:W NEXT	W:W EA					
STC EXR,@aa:16		R:W 2nd	R:W 3rd	R:W NEXT	W:W EA					
STC CCR,@aa:32		R:W 2nd	R:W 3rd	R:W 4th	R:W NEXT	W:W EA				
STC EXR,@aa:32		R:W 2nd	R:W 3rd	R:W 4th	R:W NEXT	W:W EA				
STM.L(ERn–ERn+1),@–SP		R:W 2nd	R:W:M NEXT	Internal operation, 1 state	W:W:M stack (H)*3	W:W stack (L)*3				
STM.L(ERn–ERn+2),@–SP		R:W 2nd	R:W:M NEXT	Internal operation, 1 state	W:W:M stack (H)*3	W:W stack (L)*3				
STM.L(ERn–ERn+3),@–SP		R:W 2nd	R:W:M NEXT	Internal operation, 1 state	W:W:M stack (H)*3	W:W stack (L)*3				
STMAC MACH,ERd		Cannot be used in the H8S/2357 Group								
STMAC MACL,ERd										
SUB.B Rs,Rd		R:W NEXT								
SUB.W #xx:16,Rd		R:W 2nd	R:W NEXT							
SUB.W Rs,Rd		R:W NEXT								
SUB.L #xx:32,ERd		R:W 2nd	R:W 3rd	R:W NEXT						
SUB.L ERs,ERd		R:W NEXT								
SUBS #1/2/4,ERd		R:W NEXT								
SUBX #xx:8,Rd		R:W NEXT								
SUBX Rs,Rd		R:W NEXT								
TAS @ERd*8		R:W 2nd	R:W NEXT	R:B:M EA	W:B EA					
TRAPA #x:2	Advanced	R:W NEXT	Internal operation, 1 state	W:W stack (L)	W:W stack (H)	W:W stack (EXR)	R:W:M VEC	R:W VEC+2	Internal operation, 1 state	R:W*7
XOR.B #xx8,Rd		R:W NEXT								
XOR.B Rs,Rd		R:W NEXT								
XOR.W #xx:16,Rd		R:W 2nd	R:W NEXT							
XOR.W Rs,Rd		R:W NEXT								
XOR.L #xx:32,ERd		R:W 2nd	R:W 3rd	R:W NEXT						

Instruction		1	2	3	4	5	6	7	8	9
XOR.L ERs,ERd		R:W 2nd	R:W NEXT							
XORC #xx:8,CCR		R:W NEXT								
XORC #xx:8,EXR		R:W 2nd	R:W NEXT							
Reset exception handling	Advanced	R:W VEC	R:W VEC+2	Internal operation, 1 state	R:W*5					
Interrupt exception handling	Advanced	R:W*6	Internal operation, 1 state	W:W stack (L)	W:W stack (H)	W:W stack (EXR)	R:W:M VEC	R:W VEC+2	Internal operation, 1 state	R:W*7

Notes:
1. EAs is the contents of ER5. EAd is the contents of ER6.
2. EAs is the contents of ER5. EAd is the contents of ER6. Both registers are incremented by 1 after execution of the instruction. n is the initial value of R4L or R4. If n = 0, these bus cycles are not executed.
3. Repeated two times to save or restore two registers, three times for three registers, or four times for four registers.
4. Start address after return.
5. Start address of the program.
6. Prefetch address, equal to two plus the PC value pushed onto the stack. In recovery from sleep mode or software standby mode the read operation is replaced by an internal operation.
7. Start address of the interrupt-handling routine.
8. Only register ER0, ER1, ER4, or ER5 should be used when using the TAS instruction.

A.6 Condition Code Modification

This section indicates the effect of each CPU instruction on the condition code. The notation used in the table is defined below.

m = { 31 for longword operands
15 for word operands
7 for byte operands

Si	The i-th bit of the source operand
Di	The i-th bit of the destination operand
Ri	The i-th bit of the result
Dn	The specified bit in the destination operand
—	Not affected
↕	Modified according to the result of the instruction (see definition)
0	Always cleared to 0
1	Always set to 1
*	Undetermined (no guaranteed value)
Z'	Z flag before instruction execution
C'	C flag before instruction execution

Table A-7 Condition Code Modification

Instruction	H	N	Z	V	C	Definition
ADD	↕	↕	↕	↕	↕	$H = Sm_{-4} \cdot Dm_{-4} + Dm_{-4} \cdot \overline{Rm_{-4}} + Sm_{-4} \cdot \overline{Rm_{-4}}$
						$N = Rm$
						$Z = \overline{Rm} \cdot \overline{Rm_{-1}} \cdot \cdots\cdots \cdot \overline{R0}$
						$V = Sm \cdot Dm \cdot \overline{Rm} + \overline{Sm} \cdot \overline{Dm} \cdot Rm$
						$C = Sm \cdot Dm + Dm \cdot \overline{Rm} + Sm \cdot \overline{Rm}$
ADDS	—	—	—	—	—	
ADDX	↕	↕	↕	↕	↕	$H = Sm_{-4} \cdot Dm_{-4} + Dm_{-4} \cdot \overline{Rm_{-4}} + Sm_{-4} \cdot \overline{Rm_{-4}}$
						$N = Rm$
						$Z = Z' \cdot \overline{Rm} \cdot \cdots\cdots \cdot \overline{R0}$
						$V = Sm \cdot Dm \cdot \overline{Rm} + \overline{Sm} \cdot \overline{Dm} \cdot Rm$
						$C = Sm \cdot Dm + Dm \cdot \overline{Rm} + Sm \cdot \overline{Rm}$
AND	—	↕	↕	0	—	$N = Rm$
						$Z = \overline{Rm} \cdot \overline{Rm_{-1}} \cdot \cdots\cdots \cdot \overline{R0}$
ANDC	↕	↕	↕	↕	↕	Stores the corresponding bits of the result.
						No flags change when the operand is EXR.
BAND	—	—	—	—	↕	$C = C' \cdot Dn$
Bcc	—	—	—	—	—	
BCLR	—	—	—	—	—	
BIAND	—	—	—	—	↕	$C = C' \cdot \overline{Dn}$
BILD	—	—	—	—	↕	$C = \overline{Dn}$
BIOR	—	—	—	—	↕	$C = C' + \overline{Dn}$
BIST	—	—	—	—	—	
BIXOR	—	—	—	—	↕	$C = C' \cdot Dn + \overline{C'} \cdot \overline{Dn}$
BLD	—	—	—	—	↕	$C = Dn$
BNOT	—	—	—	—	—	
BOR	—	—	—	—	↕	$C = C' + Dn$
BSET	—	—	—	—	—	
BSR	—	—	—	—	—	
BST	—	—	—	—	—	
BTST	—	—	↕	—	—	$Z = \overline{Dn}$
BXOR	—	—	—	—	↕	$C = C' \cdot \overline{Dn} + \overline{C'} \cdot Dn$
CLRMAC						Cannot be used in the H8S/2357 Group
CMP	↕	↕	↕	↕	↕	$H = Sm_{-4} \cdot \overline{Dm_{-4}} + \overline{Dm_{-4}} \cdot Rm_{-4} + Sm_{-4} \cdot Rm_{-4}$
						$N = Rm$
						$Z = \overline{Rm} \cdot \overline{Rm_{-1}} \cdot \cdots\cdots \cdot \overline{R0}$
						$V = \overline{Sm} \cdot Dm \cdot \overline{Rm} + Sm \cdot \overline{Dm} \cdot Rm$
						$C = Sm \cdot \overline{Dm} + \overline{Dm} \cdot Rm + Sm \cdot Rm$

Instruction	H	N	Z	V	C	Definition
DAA	*	↕	↕	*	↕	N = Rm Z = $\overline{Rm} \cdot \overline{Rm-1} \cdot \cdots\cdots \cdot \overline{R0}$ C: decimal arithmetic carry
DAS	*	↕	↕	*	↕	N = Rm Z = $\overline{Rm} \cdot \overline{Rm-1} \cdot \cdots\cdots \cdot \overline{R0}$ C: decimal arithmetic borrow
DEC	—	↕	↕	↕	—	N = Rm Z = $\overline{Rm} \cdot \overline{Rm-1} \cdot \cdots\cdots \cdot \overline{R0}$ V = $Dm \cdot \overline{Rm}$
DIVXS	—	↕	↕	—	—	N = $Sm \cdot \overline{Dm} + \overline{Sm} \cdot Dm$ Z = $\overline{Sm} \cdot \overline{Sm-1} \cdot \cdots\cdots \cdot \overline{S0}$
DIVXU	—	↕	↕	—	—	N = Sm Z = $\overline{Sm} \cdot \overline{Sm-1} \cdot \cdots\cdots \cdot \overline{S0}$
EEPMOV	—	—	—	—	—	
EXTS	—	↕	↕	0	—	N = Rm Z = $\overline{Rm} \cdot \overline{Rm-1} \cdot \cdots\cdots \cdot \overline{R0}$
EXTU	—	0	↕	0	—	Z = $\overline{Rm} \cdot \overline{Rm-1} \cdot \cdots\cdots \cdot \overline{R0}$
INC	—	↕	↕	↕	—	N = Rm Z = $\overline{Rm} \cdot \overline{Rm-1} \cdot \cdots\cdots \cdot \overline{R0}$ V = $\overline{Dm} \cdot Rm$
JMP	—	—	—	—	—	
JSR	—	—	—	—	—	
LDC	↕	↕	↕	↕	↕	Stores the corresponding bits of the result. No flags change when the operand is EXR.
LDM	—	—	—	—	—	
LDMAC						Cannnot be used in the H8S/2357 Group
MAC						
MOV	—	↕	↕	0	—	N = Rm Z = $\overline{Rm} \cdot \overline{Rm-1} \cdot \cdots\cdots \cdot \overline{R0}$
MOVFPE						Can not be used in the H8S/2357 Group
MOVTPE						
MULXS	—	↕	↕	—	—	N = R2m Z = $\overline{R2m} \cdot \overline{R2m-1} \cdot \cdots\cdots \cdot \overline{R0}$
MULXU	—	—	—	—	—	
NEG	↕	↕	↕	↕	↕	H = Dm–4 + Rm–4 N = Rm Z = $\overline{Rm} \cdot \overline{Rm-1} \cdot \cdots\cdots \cdot \overline{R0}$ V = $Dm \cdot Rm$ C = Dm + Rm
NOP	—	—	—	—	—	

Instruction	H	N	Z	V	C	Definition
NOT	—	↕	↕	0	—	N = Rm Z = $\overline{Rm} \cdot \overline{Rm-1} \cdot \cdots\cdots \cdot \overline{R0}$
OR	—	↕	↕	0	—	N = Rm Z = $\overline{Rm} \cdot \overline{Rm-1} \cdot \cdots\cdots \cdot \overline{R0}$
ORC	↕	↕	↕	↕	↕	Stores the corresponding bits of the result. No flags change when the operand is EXR.
POP	—	↕	↕	0	—	N = Rm Z = $\overline{Rm} \cdot \overline{Rm-1} \cdot \cdots\cdots \cdot \overline{R0}$
PUSH	—	↕	↕	0	—	N = Rm Z = $\overline{Rm} \cdot \overline{Rm-1} \cdot \cdots\cdots \cdot \overline{R0}$
ROTL	—	↕	↕	0	↕	N = Rm Z = $\overline{Rm} \cdot \overline{Rm-1} \cdot \cdots\cdots \cdot \overline{R0}$ C = Dm (1-bit shift) or C = Dm–1 (2-bit shift)
ROTR	—	↕	↕	0	↕	N = Rm Z = $\overline{Rm} \cdot \overline{Rm-1} \cdot \cdots\cdots \cdot \overline{R0}$ C = D0 (1-bit shift) or C = D1 (2-bit shift)
ROTXL	—	↕	↕	0	↕	N = Rm Z = $\overline{Rm} \cdot \overline{Rm-1} \cdot \cdots\cdots \cdot \overline{R0}$ C = Dm (1-bit shift) or C = Dm–1 (2-bit shift)
ROTXR	—	↕	↕	0	↕	N = Rm Z = $\overline{Rm} \cdot \overline{Rm-1} \cdot \cdots\cdots \cdot \overline{R0}$ C = D0 (1-bit shift) or C = D1 (2-bit shift)
RTE	↕	↕	↕	↕	↕	Stores the corresponding bits of the result.
RTS	—	—	—	—	—	
SHAL	—	↕	↕	↕	↕	N = Rm Z = $\overline{Rm} \cdot \overline{Rm-1} \cdot \cdots\cdots \cdot \overline{R0}$ V = $\overline{Dm \cdot Dm-1 + \overline{Dm} \cdot \overline{Dm-1}}$ (1-bit shift) V = $\overline{Dm \cdot Dm-1 \cdot Dm-2 \cdot \overline{Dm} \cdot \overline{Dm-1} \cdot \overline{Dm-2}}$ (2-bit shift) C = Dm (1-bit shift) or C = Dm–1 (2-bit shift)
SHAR	—	↕	↕	0	↕	N = Rm Z = $\overline{Rm} \cdot \overline{Rm-1} \cdot \cdots\cdots \cdot \overline{R0}$ C = D0 (1-bit shift) or C = D1 (2-bit shift)
SHLL	—	↕	↕	0	↕	N = Rm Z = $\overline{Rm} \cdot \overline{Rm-1} \cdot \cdots\cdots \cdot \overline{R0}$ C = Dm (1-bit shift) or C = Dm–1 (2-bit shift)
SHLR	—	0	↕	0	↕	N = Rm Z = $\overline{Rm} \cdot \overline{Rm-1} \cdot \cdots\cdots \cdot \overline{R0}$ C = D0 (1-bit shift) or C = D1 (2-bit shift)
SLEEP	—	—	—	—	—	
STC	—	—	—	—	—	
STM	—	—	—	—	—	

Instruction	H	N	Z	V	C	Definition
STMAC						Cannot be used in the H8S/2357 Group
SUB	↕	↕	↕	↕	↕	$H = Sm_{-4} \cdot \overline{Dm_{-4}} + \overline{Dm_{-4}} \cdot Rm_{-4} + Sm_{-4} \cdot Rm_{-4}$
						$N = Rm$
						$Z = \overline{Rm} \cdot \overline{Rm_{-1}} \cdot \cdots\cdots \cdot \overline{R0}$
						$V = \overline{Sm} \cdot Dm \cdot \overline{Rm} + Sm \cdot \overline{Dm} \cdot Rm$
						$C = Sm \cdot \overline{Dm} + \overline{Dm} \cdot Rm + Sm \cdot Rm$
SUBS	—	—	—	—	—	
SUBX	↕	↕	↕	↕	↕	$H = Sm_{-4} \cdot \overline{Dm_{-4}} + \overline{Dm_{-4}} \cdot Rm_{-4} + Sm_{-4} \cdot Rm_{-4}$
						$N = Rm$
						$Z = Z' \cdot \overline{Rm} \cdot \cdots\cdots \cdot \overline{R0}$
						$V = \overline{Sm} \cdot Dm \cdot \overline{Rm} + Sm \cdot \overline{Dm} \cdot Rm$
						$C = Sm \cdot \overline{Dm} + \overline{Dm} \cdot Rm + Sm \cdot Rm$
TAS	—	↕	↕	0	—	$N = Dm$
						$Z = \overline{Dm} \cdot \overline{Dm_{-1}} \cdot \cdots\cdots \cdot \overline{D0}$
TRAPA	—	—	—	—	—	
XOR	—	↕	↕	0	—	$N = Rm$
						$Z = \overline{Rm} \cdot \overline{Rm_{-1}} \cdot \cdots\cdots \cdot \overline{R0}$
XORC	↕	↕	↕	↕	↕	Stores the corresponding bits of the result.
						No flags change when the operand is EXR.

Appendix B Internal I/O Register

B.1 Addresses

Address (low)	Register Name	Bit 7	Bit 6	Bit 5	Bit 4	Bit 3	Bit 2	Bit 1	Bit 0	Module Name	Data Bus Width
H'F800 to H'FBFF	MRA	SM1	SM0	DM1	DM0	MD1	MD0	DTS	Sz	DTC	16/32*[1] bits
	SAR										
	MRB	CHNE	DISEL	—	—	—	—	—	—		
	DAR										
	CRA										
	CRB										
H'FE80	TCR3	CCLR2	CCLR1	CCLR0	CKEG1	CKEG0	TPSC2	TPSC1	TPSC0	TPU3	16 bits
H'FE81	TMDR3	—	—	BFB	BFA	MD3	MD2	MD1	MD0		
H'FE82	TIOR3H	IOB3	IOB2	IOB1	IOB0	IOA3	IOA2	IOA1	IOA0		
H'FE83	TIOR3L	IOD3	IOD2	IOD1	IOD0	IOC3	IOC2	IOC1	IOC0		
H'FE84	TIER3	TTGE	—	—	TCIEV	TGIED	TGIEC	TGIEB	TGIEA		
H'FE85	TSR3	—	—	—	TCFV	TGFD	TGFC	TGFB	TGFA		
H'FE86	TCNT3										
H'FE87											
H'FE88	TGR3A										
H'FE89											
H'FE8A	TGR3B										
H'FE8B											
H'FE8C	TGR3C										
H'FE8D											
H'FE8E	TGR3D										
H'FE8F											
H'FE90	TCR4	—	CCLR1	CCLR0	CKEG1	CKEG0	TPSC2	TPSC1	TPSC0	TPU4	16 bits
H'FE91	TMDR4	—	—	—	—	MD3	MD2	MD1	MD0		
H'FE92	TIOR4	IOB3	IOB2	IOB1	IOB0	IOA3	IOA2	IOA1	IOA0		
H'FE94	TIER4	TTGE	—	TCIEU	TCIEV	—	—	TGIEB	TGIEA		
H'FE95	TSR4	TCFD	—	TCFU	TCFV	—	—	TGFB	TGFA		
H'FE96	TCNT4										
H'FE97											
H'FE98	TGR4A										
H'FE99											
H'FE9A	TGR4B										
H'FE9B											

Address (low)	Register Name	Bit 7	Bit 6	Bit 5	Bit 4	Bit 3	Bit 2	Bit 1	Bit 0	Module Name	Data Bus Width
H'FEA0	TCR5	—	CCLR1	CCLR0	CKEG1	CKEG0	TPSC2	TPSC1	TPSC0	TPU5	16 bits
H'FEA1	TMDR5	—	—	—	—	MD3	MD2	MD1	MD0		
H'FEA2	TIOR5	IOB3	IOB2	IOB1	IOB0	IOA3	IOA2	IOA1	IOA0		
H'FEA4	TIER5	TTGE	—	TCIEU	TCIEV	—	—	TGIEB	TGIEA		
H'FEA5	TSR5	TCFD	—	TCFU	TCFV	—	—	TGFB	TGFA		
H'FEA6	TCNT5										
H'FEA7											
H'FEA8	TGR5A										
H'FEA9											
H'FEAA	TGR5B										
H'FEAB											
H'FEB0	P1DDR	P17DDR	P16DDR	P15DDR	P14DDR	P13DDR	P12DDR	P11DDR	P10DDR	Port	8 bits
H'FEB1	P2DDR	P27DDR	P26DDR	P25DDR	P24DDR	P23DDR	P22DDR	P21DDR	P20DDR		
H'FEB2	P3DDR	—	—	P35DDR	P34DDR	P33DDR	P32DDR	P31DDR	P30DDR		
H'FEB4	P5DDR	—	—	—	—	P53DDR	P52DDR	P51DDR	P50DDR		
H'FEB5	P6DDR	P67DDR	P66DDR	P65DDR	P64DDR	P63DDR	P62DDR	P61DDR	P60DDR		
H'FEB9	PADDR	PA7DDR	PA6DDR	PA5DDR	PA4DDR	PA3DDR	PA2DDR	PA1DDR	PA0DDR		
H'FEBA	PBDDR*[2]	PB7DDR	PB6DDR	PB5DDR	PB4DDR	PB3DDR	PB2DDR	PB1DDR	PB0DDR		
H'FEBB	PCDDR*[2]	PC7DDR	PC6DDR	PC5DDR	PC4DDR	PC3DDR	PC2DDR	PC1DDR	PC0DDR		
H'FEBC	PDDDR*[2]	PD7DDR	PD6DDR	PD5DDR	PD4DDR	PD3DDR	PD2DDR	PD1DDR	PD0DDR		
H'FEBD	PEDDR	PE7DDR	PE6DDR	PE5DDR	PE4DDR	PE3DDR	PE2DDR	PE1DDR	PE0DDR		
H'FEBE	PFDDR	PF7DDR	PF6DDR	PF5DDR	PF4DDR	PF3DDR	PF2DDR	PF1DDR	PF0DDR		
H'FEBF	PGDDR	—	—	—	PG4DDR	PG3DDR	PG2DDR	PG1DDR	PG0DDR		
H'FEC4	IPRA	—	IPR6	IPR5	IPR4	—	IPR2	IPR1	IPR0	Interrupt controller	8 bits
H'FEC5	IPRB	—	IPR6	IPR5	IPR4	—	IPR2	IPR1	IPR0		
H'FEC6	IPRC	—	IPR6	IPR5	IPR4	—	IPR2	IPR1	IPR0		
H'FEC7	IPRD	—	IPR6	IPR5	IPR4	—	IPR2	IPR1	IPR0		
H'FEC8	IPRE	—	IPR6	IPR5	IPR4	—	IPR2	IPR1	IPR0		
H'FEC9	IPRF	—	IPR6	IPR5	IPR4	—	IPR2	IPR1	IPR0		
H'FECA	IPRG	—	IPR6	IPR5	IPR4	—	IPR2	IPR1	IPR0		
H'FECB	IPRH	—	IPR6	IPR5	IPR4	—	IPR2	IPR1	IPR0		
H'FECC	IPRI	—	IPR6	IPR5	IPR4	—	IPR2	IPR1	IPR0		
H'FECD	IPRJ	—	IPR6	IPR5	IPR4	—	IPR2	IPR1	IPR0		
H'FECE	IPRK	—	IPR6	IPR5	IPR4	—	IPR2	IPR1	IPR0		
H'FED0	ABWCR	ABW7	ABW6	ABW5	ABW4	ABW3	ABW2	ABW1	ABW0	Bus controller	8 bits
H'FED1	ASTCR	AST7	AST6	AST5	AST4	AST3	AST2	AST1	AST0		
H'FED2	WCRH	W71	W70	W61	W60	W51	W50	W41	W40		
H'FED3	WCRL	W31	W30	W21	W20	W11	W10	W01	W00		
H'FED4	BCRH	ICIS1	ICIS0	BRSTRM	BRSTS1	BRSTS0	RMTS2	RMTS1	RMST0		
H'FED5	BCRL	BRLE	BREQOE	EAE	LCASS	DDS	—	WDBE	WAITE		
H'FED6	MCR	TPC	BE	RCDM	CW2	MXC1	MXC0	RLW1	RLW0		
H'FED7	DRAMCR	RFSHE	RCW	RMODE	CMF	CMIE	CKS2	CKS1	CKS0		
H'FED8	RTCNT										
H'FED9	RTCOR										
H'FEDB*[7]	RAMER	—	—	—	—	—	RAMS	RAM1	RAM0		
H'FEDB*[8]	RAMER	—	—	—	—	RAMS	RAM2	RAM1	RAM0		

Address (low)	Register Name	Bit 7	Bit 6	Bit 5	Bit 4	Bit 3	Bit 2	Bit 1	Bit 0	Module Name	Data Bus Width
H'FEE0	MAR0AH	—	—	—	—	—	—	—	—	DMAC	16 bits
H'FEE1											
H'FEE2	MAR0AL										
H'FEE3											
H'FEE4	IOAR0A										
H'FEE5											
H'FEE6	ETCR0A										
H'FEE7											
H'FEE8	MAR0BH	—	—	—	—	—	—	—	—		
H'FEE9											
H'FEEA	MAR0BL										
H'FEEB											
H'FEEC	IOAR0B										
H'FEED											
H'FEEE	ETCR0B										
H'FEEF											
H'FEF0	MAR1AH	—	—	—	—	—	—	—	—	DMAC	16 bits
H'FEF1											
H'FEF2	MAR1AL										
H'FEF3											
H'FEF4	IOAR1A										
H'FEF5											
H'FEF6	ETCR1A										
H'FEF7											
H'FEF8	MAR1BH	—	—	—	—	—	—	—	—		
H'FEF9											
H'FEFA	MAR1BL										
H'FEFB											
H'FEFC	IOAR1B										
H'FEFD											
H'FEFE	ETCR1B										
H'FEFF											
H'FF00	DMAWER	—	—	—	—	WE1B	WE1A	WE0B	WE0A		8 bits
H'FF01	DMATCR	—	—	TEE1	TEE0	—	—	—	—		
H'FF02	DMACR0A	DTSZ	DTID	RPE	DTDIR	DTF3	DTF2	DTF1	DTF0	Short address mode	16 bits
		DTSZ	SAID	SAIDE	BLKDIR	BLKE	—	—	—	Full address mode	
H'FF03	DMACR0B	DTSZ	DTID	RPE	DTDIR	DTF3	DTF2	DTF1	DTF0	Short address mode	
		—	DAID	DAIDE	—	DTF3	DTF2	DTF1	DTF0	Full address mode	
H'FF04	DMACR1A	DTSZ	DTID	RPE	DTDIR	DTF3	DTF2	DTF1	DTF0	Short address mode	
		DTSZ	SAID	SAIDE	BLKDIR	BLKE	—	—	—	Full address mode	
H'FF05	DMACR1B	DTSZ	DTID	RPE	DTDIR	DTF3	DTF2	DTF1	DTF0	Short address mode	
		—	DAID	DAIDE	—	DTF3	DTF2	DTF1	DTF0	Full address mode	

Address (low)	Register Name	Bit 7	Bit 6	Bit 5	Bit 4	Bit 3	Bit 2	Bit 1	Bit 0	Module Name	Data Bus Width
H'FF06	DMABCRH	FAE1	FAE0	SAE1	SAE0	DTA1B	DTA1A	DTA0B	DTA0A	Short address mode	16 bits
		FAE1	FAE0	—	—	DTA1	—	DTA0	—	Full address mode	
H'FF07	DMABCRL	DTE1B	DTE1A	DTE0B	DTE0A	DTIE1B	DTIE1A	DTIE0B	DTIE0A	Short address mode	
		DTME1	DTE1	DTME0	DTE0	DTIE1B	DTIE1A	DTIE0B	DTIE0A	Full address mode	
H'FF2C	ISCRH	IRQ7SCB	IRQ7SCA	IRQ6SCB	IRQ6SCA	IRQ5SCB	IRQ5SCA	IRQ4SCB	IRQ4SCA	Interrupt controller	8 bits
H'FF2D	ISCRL	IRQ3SCB	IRQ3SCA	IRQ2SCB	IRQ2SCA	IRQ1SCB	IRQ1SCA	IRQ0SCB	IRQ0SCA		
H'FF2E	IER	IRQ7E	IRQ6E	IRQ5E	IRQ4E	IRQ3E	IRQ2E	IRQ1E	IRQ0E		
H'FF2F	ISR	IRQ7F	IRQ6F	IRQ5F	IRQ4F	IRQ3F	IRQ2F	IRQ1F	IRQ0F		
H'FF30 to H'FF35	DTCER	DTCE7	DTCE6	DTCE5	DTCE4	DTCE3	DTCE2	DTCE1	DTCE0	DTC	8 bits
H'FF37	DTVECR	SWDTE	DTVEC6	DTVEC5	DTVEC4	DTVEC3	DTVEC2	DTVEC1	DTVEC0		
H'FF38	SBYCR	SSBY	STS2	STS1	STS0	OPE	—	—	—	Power-down mode	8 bits
H'FF39	SYSCR	—	—	INTM1	INTM0	NMIEG	—	—	RAME	MCU	8 bits
H'FF3A	SCKCR	PSTOP	—	—	—	—	SCK2	SCK1	SCK0	Clock pulse generator	8 bits
H'FF3B	MDCR	—	—	—	—	—	MDS2	MDS1	MDS0	MCU	8 bits
H'FF3C	MSTPCRH	MSTP15	MSTP14	MSTP13	MSTP12	MSTP11	MSTP10	MSTP9	MSTP8	Power-down mode	8 bits
H'FF3D	MSTPCRL	MSTP7	MSTP6	MSTP5	MSTP4	MSTP3	MSTP2	MSTP1	MSTP0		
H'FF42	SYSCR2 *9 *8	—	—	—	—	FLSHE	—	—	—	MCU	8 bits
H'FF44	Reserved	—	—	—	—	—	—	—	—	Reserved	—
H'FF45	Reserved	—	—	—	—	—	—	—	—	Reserved	—
H'FF46	PCR	G3CMS1	G3CMS0	G2CMS1	G2CMS0	G1CMS1	G1CMS0	G0CMS1	G0CMS0	PPG	8 bits
H'FF47	PMR	G3INV	G2INV	G1INV	G0INV	G3NOV	G2NOV	G1NOV	G0NOV		
H'FF48	NDERH	NDER15	NDER14	NDER13	NDER12	NDER11	NDER10	NDER9	NDER8		
H'FF49	NDERL	NDER7	NDER6	NDER5	NDER4	NDER3	NDER2	NDER1	NDER0		
H'FF4A	PODRH	POD15	POD14	POD13	POD12	POD11	POD10	POD9	POD8		
H'FF4B	PODRL	POD7	POD6	POD5	POD4	POD3	POD2	POD1	POD0		
H'FF4C*3	NDRH	NDR15	NDR14	NDR13	NDR12	NDR11	NDR10	NDR9	NDR8		
H'FF4D*3	NDRL	NDR7	NDR6	NDR5	NDR4	NDR3	NDR2	NDR1	NDR0		
H'FF4E*3	NDRH	—	—	—	—	NDR11	NDR10	NDR9	NDR8		
H'FF4F*3	NDRL	—	—	—	—	NDR3	NDR2	NDR1	NDR0		
H'FF50	PORT1	P17	P16	P15	P14	P13	P12	P11	P10	Port	8 bits
H'FF51	PORT2	P27	P26	P25	P24	P23	P22	P21	P20		
H'FF52	PORT3	—	—	P35	P34	P33	P32	P31	P30		
H'FF53	PORT4	P47	P46	P45	P44	P43	P42	P41	P40		
H'FF54	PORT5	—	—	—	—	P53	P52	P51	P50		
H'FF55	PORT6	P67	P66	P65	P64	P63	P62	P61	P60		
H'FF59	PORTA	PA7	PA6	PA5	PA4	PA3	PA2	PA1	PA0		
H'FF5A	PORTB*2	PB7	PB6	PB5	PB4	PB3	PB2	PB1	PB0		
H'FF5B	PORTC*2	PC7	PC6	PC5	PC4	PC3	PC2	PC1	PC0		
H'FF5C	PORTD*2	PD7	PD6	PD5	PD4	PD3	PD2	PD1	PD0		
H'FF5D	PORTE	PE7	PE6	PE5	PE4	PE3	PE2	PE1	PE0		

Address (low)	Register Name	Bit 7	Bit 6	Bit 5	Bit 4	Bit 3	Bit 2	Bit 1	Bit 0	Module Name	Data Bus Width
H'FF5E	PORTF	PF7	PF6	PF5	PF4	PF3	PF2	PF1	PF0	Port	8 bits
H'FF5F	PORTG	—	—	—	PG4	PG3	PG2	PG1	PG0		
H'FF60	P1DR	P17DR	P16DR	P15DR	P14DR	P13DR	P12DR	P11DR	P10DR		
H'FF61	P2DR	P27DR	P26DR	P25DR	P24DR	P23DR	P22DR	P21DR	P20DR		
H'FF62	P3DR	—	—	P35DR	P34DR	P33DR	P32DR	P31DR	P30DR		
H'FF64	P5DR	—	—	—	—	P53DR	P52DR	P51DR	P50DR		
H'FF65	P6DR	P67DR	P66DR	P65DR	P64DR	P63DR	P62DR	P61DR	P60DR		
H'FF69	PADR	PA7DR	PA6DR	PA5DR	PA4DR	PA3DR	PA2DR	PA1DR	PA0DR		
H'FF6A	PBDR*2	PB7DR	PB6DR	PB5DR	PB4DR	PB3DR	PB2DR	PB1DR	PB0DR		
H'FF6B	PCDR*2	PC7DR	PC6DR	PC5DR	PC4DR	PC3DR	PC2DR	PC1DR	PC0DR		
H'FF6C	PDDR*2	PD7DR	PD6DR	PD5DR	PD4DR	PD3DR	PD2DR	PD1DR	PD0DR		
H'FF6D	PEDR	PE7DR	PE6DR	PE5DR	PE4DR	PE3DR	PE2DR	PE1DR	PE0DR		
H'FF6E	PFDR	PF7DR	PF6DR	PF5DR	PF4DR	PF3DR	PF2DR	PF1DR	PF0DR		
H'FF6F	PGDR	—	—	—	PG4DR	PG3DR	PG2DR	PG1DR	PG0DR		
H'FF70	PAPCR*2	PA7PCR	PA6PCR	PA5PCR	PA4PCR	PA3PCR	PA2PCR	PA1PCR	PA0PCR		
H'FF71	PBPCR*2	PB7PCR	PB6PCR	PB5PCR	PB4PCR	PB3PCR	PB2PCR	PB1PCR	PB0PCR		
H'FF72	PCPCR*2	PC7PCR	PC6PCR	PC5PCR	PC4PCR	PC3PCR	PC2PCR	PC1PCR	PC0PCR		
H'FF73	PDPCR*2	PD7PCR	PD6PCR	PD5PCR	PD4PCR	PD3PCR	PD2PCR	PD1PCR	PD0PCR		
H'FF74	PEPCR*2	PE7PCR	PE6PCR	PE5PCR	PE4PCR	PE3PCR	PE2PCR	PE1PCR	PE0PCR		
H'FF76	P3ODR	—	—	P35ODR	P34ODR	P33ODR	P32ODR	P31ODR	P30ODR		
H'FF77	PAODR*2	PA7ODR	PA6ODR	PA5ODR	PA4ODR	PA3ODR	PA2ODR	PA1ODR	PA0ODR		
H'FF78	SMR0	C/$\overline{A}$/ GM*4	CHR	PE	O/$\overline{E}$	STOP	MP	CKS1	CKS0	SCI0, Smart Card interface 0	8 bits
H'FF79	BRR0										
H'FF7A	SCR0	TIE	RIE	TE	RE	MPIE	TEIE	CKE1	CKE0		
H'FF7B	TDR0										
H'FF7C	SSR0	TDRE	RDRF	ORER	FER/ ERS*5	PER	TEND	MPB	MPBT		
H'FF7D	RDR0										
H'FF7E	SCMR0	—	—	—	—	SDIR	SINV	—	SMIF		
H'FF80	SMR1	C/$\overline{A}$/ GM*4	CHR	PE	O/$\overline{E}$	STOP	MP	CKS1	CKS0	SCI1, Smart Card interface 1	8 bits
H'FF81	BRR1										
H'FF82	SCR1	TIE	RIE	TE	RE	MPIE	TEIE	CKE1	CKE0		
H'FF83	TDR1										
H'FF84	SSR1	TDRE	RDRF	ORER	FER/ ERS*5	PER	TEND	MPB	MPBT		
H'FF85	RDR1										
H'FF86	SCMR1	—	—	—	—	SDIR	SINV	—	SMIF		
H'FF88	SMR2	C/$\overline{A}$/ GM*4	CHR	PE	O/$\overline{E}$	STOP	MP	CKS1	CKS0	SCI2, Smart Card interface 2	8 bits
H'FF89	BRR2										
H'FF8A	SCR2	TIE	RIE	TE	RE	MPIE	TEIE	CKE1	CKE0		
H'FF8B	TDR2										

Address (low)	Register Name	Bit 7	Bit 6	Bit 5	Bit 4	Bit 3	Bit 2	Bit 1	Bit 0	Module Name	Data Bus Width
H'FF8C	SSR2	TDRE	RDRF	ORER	FER/ ERS*5	PER	TEND	MPB	MPBT	SCI2, Smart Card interface 2	8 bits
H'FF8D	RDR2										
H'FF8E	SCMR2	—	—	—	—	SDIR	SINV	—	SMIE		
H'FF90	ADDRAH	AD9	AD8	AD7	AD6	AD5	AD4	AD3	AD2	A/D converter	8 bits
H'FF91	ADDRAL	AD1	AD0	—	—	—	—	—	—		
H'FF92	ADDRBH	AD9	AD8	AD7	AD6	AD5	AD4	AD3	AD2		
H'FF93	ADDRBL	AD1	AD0	—	—	—	—	—	—		
H'FF94	ADDRCH	AD9	AD8	AD7	AD6	AD5	AD4	AD3	AD2		
H'FF95	ADDRCL	AD1	AD0	—	—	—	—	—	—		
H'FF96	ADDRDH	AD9	AD8	AD7	AD6	AD5	AD4	AD3	AD2		
H'FF97	ADDRDL	AD1	AD0	—	—	—	—	—	—		
H'FF98	ADCSR	ADF	ADIE	ADST	SCAN	CKS	—	CH1	CH0		
H'FF99	ADCR	TRGS1	TRGS0	—	—	—	—	—	—		
H'FFA4	DADR0									D/A converter	8 bits
H'FFA5	DADR1										
H'FFA6	DACR	DAOE1	DAOE0	DAE	—	—	—	—	—		
H'FFAC	Reserved	—	—	—	—	—	—	—	—	Reserved	—
H'FFB0	TCR0	CMIEB	CMIEA	OVIE	CCLR1	CCLR0	CKS2	CKS1	CKS0	8-bit timer channel 0, 1	16 bits
H'FFB1	TCR1	CMIEB	CMIEA	OVIE	CCLR1	CCLR0	CKS2	CKS1	CKS0		
H'FFB2	TCSR0	CMFB	CMFA	OVF	ADTE	OS3	OS2	OS1	OS0		
H'FFB3	TCSR1	CMFB	CMFA	OVF	—	OS3	OS2	OS1	OS0		
H'FFB4	TCORA0										
H'FFB5	TCORA1										
H'FFB6	TCORB0										
H'FFB7	TCORB1										
H'FFB8	TCNT0										
H'FFB9	TCNT1										
H'FFBC (read)	TCSR	OVF	WT/$\overline{\text{IT}}$	TME	—	—	CKS2	CKS1	CKS0	WDT	16 bits
H'FFBD (read)	TCNT										
H'FFBF (read)	RSTCSR	WOVF	RSTE	RSTS*6	—	—	—	—	—		
H'FFC0	TSTR	—	—	CST5	CST4	CST3	CST2	CST1	CST0	TPU	16 bits
H'FFC1	TSYR	—	—	SYNC5	SYNC4	SYNC3	SYNC2	SYNC1	SYNC0		
H'FFC8*7	FLMCR1	FWE	SWE	—	—	EV	PV	E	P	FLASH (2357F-ZTAT)	8 bits
H'FFC9*7	FLMCR2	FLER	—	—	—	—	—	ESU	PSU		
H'FFCA*7	EBR1	—	—	—	—	—	—	EB9	EB8		
H'FFCB*7	EBR2	EB7	EB6	EB5	EB4	EB3	EB2	EB1	EB0		
H'FFC8*8	FLMCR1	FWE	SWE	ESU	PSU	EV	PV	E	P	FLASH (2398F-ZTAT)	8 bits
H'FFC9*8	FLMCR2	FLER	—	—	—	—	—	—	—		
H'FFCA*8	EBR1	EB7	EB6	EB5	EB4	EB3	EB2	EB1	EB0		
H'FFCB*8	EBR2	—	—	—	—	EB11	EB10	EB9	EB8		

Address (low)	Register Name	Bit 7	Bit 6	Bit 5	Bit 4	Bit 3	Bit 2	Bit 1	Bit 0	Module Name	Data Bus Width
H'FFD0	TCR0	CCLR2	CCLR1	CCLR0	CKEG1	CKEG0	TPSC2	TPSC1	TPSC0	TPU0	16 bits
H'FFD1	TMDR0	—	—	BFB	BFA	MD3	MD2	MD1	MD0		
H'FFD2	TIOR0H	IOB3	IOB2	IOB1	IOB0	IOA3	IOA2	IOA1	IOA0		
H'FFD3	TIOR0L	IOD3	IOD2	IOD1	IOD0	IOC3	IOC2	IOC1	IOC0		
H'FFD4	TIER0	TTGE	—	—	TCIEV	TGIED	TGIEC	TGIEB	TGIEA		
H'FFD5	TSR0	—	—	—	TCFV	TGFD	TGFC	TGFB	TGFA		
H'FFD6	TCNT0										
H'FFD7											
H'FFD8	TGR0A										
H'FFD9											
H'FFDA	TGR0B										
H'FFDB											
H'FFDC	TGR0C										
H'FFDD											
H'FFDE	TGR0D										
H'FFDF											
H'FFE0	TCR1	—	CCLR1	CCLR0	CKEG1	CKEG0	TPSC2	TPSC1	TPSC0	TPU1	16 bits
H'FFE1	TMDR1	—	—	—	—	MD3	MD2	MD1	MD0		
H'FFE2	TIOR1	IOB3	IOB2	IOB1	IOB0	IOA3	IOA2	IOA1	IOA0		
H'FFE4	TIER1	TTGE	—	TCIEU	TCIEV	—	—	TGIEB	TGIEA		
H'FFE5	TSR1	TCFD	—	TCFU	TCFV	—	—	TGFB	TGFA		
H'FFE6	TCNT1										
H'FFE7											
H'FFE8	TGR1A										
H'FFE9											
H'FFEA	TGR1B										
H'FFEB											
H'FFF0	TCR2	—	CCLR1	CCLR0	CKEG1	CKEG0	TPSC2	TPSC1	TPSC0	TPU2	16 bits
H'FFF1	TMDR2	—	—	—	—	MD3	MD2	MD1	MD0		
H'FFF2	TIOR2	IOB3	IOB2	IOB1	IOB0	IOA3	IOA2	IOA1	IOA0		
H'FFF4	TIER2	TTGE	—	TCIEU	TCIEV	—	—	TGIEB	TGIEA		
H'FFF5	TSR2	TCFD	—	TCFU	TCFV	—	—	TGFB	TGFA		
H'FFF6	TCNT2										
H'FFF7											
H'FFF8	TGR2A										
H'FFF9											
H'FFFA	TGR2B										
H'FFFB											

Notes: 1. Located in on-chip RAM. The bus width is 32 bits when the DTC accesses this area as register information, and 16 bits otherwise.

2. Applies to the H8S/2357 and H8S/2398.

3. If the pulse output group 2 and pulse output group 3 output triggers are the same according to the PCR setting, the NDRH address will be H'FF4C, and if different, the address of NDRH for group 2 will be H'FF4E, and that for group 3 will be H'FF4C. Similarly, if the pulse output group 0 and pulse output group 1 output triggers are the same according to the PCR setting, the NDRL address will be H'FF4D, and if different, the address of NDRL for group 0 will be H'FF4F, and that for group 1 will be H'FF4D.

4. Functions as C/A for SCI use, and as GM for Smart Card interface use.

5. Functions as FER for SCI use, and as ERS for Smart Card interface use.

6. Applies to the H8S/2357 ZTAT only.
7. Applies to the H8S/2357 F-ZTAT only.
8. Applies to the H8S/2398 F-ZTAT only.

B.2 Functions

MRA—DTC Mode Register A **H'F800—H'FBFF** **DTC**

Bit :	7	6	5	4	3	2	1	0
	SM1	SM0	DM1	DM0	MD1	MD0	DTS	Sz
Initial value :	Undefined	Undefined	Undefined	Undefined	Undefined	Undefined	Undefined	Undefined
Read/Write :	—	—	—	—	—	—	—	—

DTC Data Transfer Size

0	Byte-size transfer
1	Word-size transfer

DTC Transfer Mode Select

0	Destination side is repeat area or block area
1	Source side is repeat area or block area

DTC Mode

0	0	Normal mode
	1	Repeat mode
1	0	Block transfer mode
	1	—

Destination Address Mode

0	—	DAR is fixed
1	0	DAR is incremented after a transfer (by +1 when Sz = 0; by +2 when Sz = 1)
	1	DAR is decremented after a transfer (by -1 when Sz = 0; by -2 when Sz = 1)

Source Address Mode

0	—	SAR is fixed
1	0	SAR is incremented after a transfer (by +1 when Sz = 0; by +2 when Sz = 1)
	1	SAR is decremented after a transfer (by -1 when Sz = 0; by -2 when Sz = 1)

MRB—DTC Mode Register B **H'F800—H'FBFF** **DTC**

Bit :	7	6	5	4	3	2	1	0
	CHNE	DISEL	—	—	—	—	—	—
Initial value :	Undefined	Undefined	Undefined	Undefined	Undefined	Undefined	Undefined	Undefined
Read/Write :	—	—	—	—	—	—	—	—

Reserved
Only 0 should be written to these bits

DTC Interrupt Select

0	After a data transfer ends, the CPU interrupt is disabled unless the transfer counter is 0
1	After a data transfer ends, the CPU interrupt is enabled

DTC Chain Transfer Enable

0	End of DTC data transfer
1	DTC chain transfer

SAR—DTC Source Address Register **H'F800—H'FBFF** **DTC**

Bit :	23	22	21	20	19	- - -	4	3	2	1	0
						- - -					
Initial value :	Unde-fined	Unde-fined	Unde-fined	Unde-fined	Unde-fined	- - -	Unde-fined	Unde-fined	Unde-fined	Unde-fined	Unde-fined
Read/Write :	—	—	—	—	—	- - -	—	—	—	—	—

Specifies transfer data source address

DAR—DTC Destination Address Register **H'F800—H'FBFF** **DTC**

Bit :	23	22	21	20	19	- - -	4	3	2	1	0
						- - -					
Initial value :	Unde-fined	Unde-fined	Unde-fined	Unde-fined	Unde-fined	- - -	Unde-fined	Unde-fined	Unde-fined	Unde-fined	Unde-fined
Read/Write :	—	—	—	—	—	- - -	—	—	—	—	—

Specifies transfer data destination address

CRA—DTC Transfer Count Register A **H'F800—H'FBFF** **DTC**

Bit :	15	14	13	12	11	10	9	8	7	6	5	4	3	2	1	0
Initial value :	Unde-fined	Unde-fined	Unde-fined	Unde-fined	Unde-fined	Unde-fined	Unde-fined	Unde-fined	Unde-fined	Unde-fined	Unde-fined	Unde-fined	Unde-fined	Unde-fined	Unde-fined	Unde-fined
Read/Write :	—	—	—	—	—	—	—	—	—	—	—	—	—	—	—	—

CRAH ◄► CRAL

Specifies the number of DTC data transfers

CRB—DTC Transfer Count Register B H'F800—H'FBFF DTC

Bit :	15	14	13	12	11	10	9	8	7	6	5	4	3	2	1	0
Initial value :	Unde-fined	Unde-fined	Unde-fined	Unde-fined	Unde-fined	Unde-fined	Unde-fined	Unde-fined	Unde-fined	Unde-fined	Unde-fined	Unde-fined	Unde-fined	Unde-fined	Unde-fined	Unde-fined
Read/Write :	—	—	—	—	—	—	—	—	—	—	—	—	—	—	—	—

Specifies the number of DTC block data transfers

TCR3—Timer Control Register 3 H'FE80 TPU3

Bit :	7	6	5	4	3	2	1	0
	CCLR2	CCLR1	CCLR0	CKEG1	CKEG0	TPSC2	TPSC1	TPSC0
Initial value :	0	0	0	0	0	0	0	0
Read/Write :	R/W	R/W	R/W	R/W	R/W	R/W	R/W	R/W

Timer Prescaler

0	0	0	Internal clock: counts on ø/1
		1	Internal clock: counts on ø/4
	1	0	Internal clock: counts on ø/16
		1	Internal clock: counts on ø/64
1	0	0	External clock: counts on TCLKA pin input
		1	Internal clock: counts on ø/1024
	1	0	Internal clock: counts on ø/256
		1	Internal clock: counts on ø/4096

Clock Edge

0	0	Count at rising edge
	1	Count at falling edge
1	—	Count at both edges

Counter Clear

0	0	0	TCNT clearing disabled
		1	TCNT cleared by TGRA compare match/input capture
	1	0	TCNT cleared by TGRB compare match/input capture
		1	TCNT cleared by counter clearing for another channel performing synchronous clearing/synchronous operation *1
1	0	0	TCNT clearing disabled
		1	TCNT cleared by TGRC compare match/input capture *2
	1	0	TCNT cleared by TGRD compare match/input capture *2
		1	TCNT cleared by counter clearing for another channel performing synchronous clearing/synchronous operation *1

Notes: 1. Synchronous operation setting is performed by setting the SYNC bit in TSYR to 1.
2. When TGRC or TGRD is used as a buffer register, TCNT is not cleared because the buffer register setting has priority, and compare match/input capture does not occur.

TMDR3—Timer Mode Register 3 **H'FE81** **TPU3**

Bit :	7	6	5	4	3	2	1	0
	—	—	BFB	BFA	MD3	MD2	MD1	MD0
Initial value :	1	1	0	0	0	0	0	0
Read/Write :	—	—	R/W	R/W	R/W	R/W	R/W	R/W

Mode

0	0	0	0	Normal operation
			1	Reserved
		1	0	PWM mode 1
			1	PWM mode 2
	1	0	0	Phase counting mode 1
			1	Phase counting mode 2
		1	0	Phase counting mode 3
			1	Phase counting mode 4
1	×	×	×	—

×: Don't care

Notes: 1. MD3 is a reserved bit. In a write, it should always be written with 0.
2. Phase counting mode cannot be set for channels 0 and 3. In this case, 0 should always be written to MD2.

Buffer Operation A

0	TGRA operates normally
1	TGRA and TGRC used together for buffer operation

Buffer Operation B

0	TGRB operates normally
1	TGRB and TGRD used together for buffer operation

TIOR3H—Timer I/O Control Register 3H H'FE82 TPU3

Bit :	7	6	5	4	3	2	1	0
Initial value :	IOB3	IOB2	IOB1	IOB0	IOA3	IOA2	IOA1	IOA0
	0	0	0	0	0	0	0	0
Read/Write :	R/W	R/W	R/W	R/W	R/W	R/W	R/W	R/W

TGR3A I/O Control

0	0	0	0	TGR3A is output compare register	Output disabled	
			1		Initial output is 0 output	0 output at compare match
		1	0			1 output at compare match
			1			Toggle output at compare match
	1	0	0		Output disabled	
			1		Initial output is 1 output	0 output at compare match
		1	0			1 output at compare match
			1			Toggle output at compare match
1	0	0	0	TGR3A is input capture register	Capture input source is TIOCA3 pin	Input capture at rising edge
			1			Input capture at falling edge
		1	×			Input capture at both edges
	1	×	×		Capture input source is channel 4/count clock	Input capture at TCNT4 count-up/ count-down

×: Don't care

TGR3B I/O Control

0	0	0	0	TGR3B is output compare register	Output disabled	
			1		Initial output is 0 output	0 output at compare match
		1	0			1 output at compare match
			1			Toggle output at compare match
	1	0	0		Output disabled	
			1		Initial output is 1 output	0 output at compare match
		1	0			1 output at compare match
			1			Toggle output at compare match
1	0	0	0	TGR3B is input capture register	Capture input source is TIOCB3 pin	Input capture at rising edge
			1			Input capture at falling edge
		1	×			Input capture at both edges
	1	×	×		Capture input source is channel 4/count clock	Input capture at TCNT4 count-up/ count-down*

×: Don't care

Note: * If bits TPSC2 to TPSC0 in TCR4 are set to B'000, and ø/1 is used as the TCNT4 count clock, this setting will be invalid and input capture will not occur.

TIOR3L—Timer I/O Control Register 3L H'FE83 TPU3

Bit :	7	6	5	4	3	2	1	0
	IOD3	IOD2	IOD1	IOD0	IOC3	IOC2	IOC1	IOC0
Initial value :	0	0	0	0	0	0	0	0
Read/Write :	R/W	R/W	R/W	R/W	R/W	R/W	R/W	R/W

TRG3C I/O Control

0	0	0	0	TGR3C is output compare register	Output disabled	
			1		Initial output is 0 output	0 output at compare match
		1	0			1 output at compare match
			1			Toggle output at compare match
	1	0	0		Output disabled	
			1		Initial output is 1 output	0 output at compare match
		1	0			1 output at compare match
			1			Toggle output at compare match
1	0	0	0	TGR3C is input capture register	Capture input source is TIOCC3 pin	Input capture at rising edge
			1			Input capture at falling edge
		1	×			Input capture at both edges
	1	×	×		Capture input source is channel 4/count clock	Input capture at TCNT4 count-up/ count-down

× : Don't care

Note: When the BFA bit in TMDR3 is set to 1 and TGR3C is used as a buffer register, this setting is invalid and input capture/output compare is not generated.

TGR3D I/O Control

0	0	0	0	TGR3D is output compare register *2	Output disabled	
			1		Initial output is 0 output	0 output at compare match
		1	0			1 output at compare match
			1			Toggle output at compare match
	1	0	0		Output disabled	
			1		Initial output is 1 output	0 output at compare match
		1	0			1 output at compare match
			1			Toggle output at compare match
1	0	0	0	TGR3D is input capture register *2	Capture input source is TIOCD3 pin	Input capture at rising edge
			1			Input capture at falling edge
		1	×			Input capture at both edges
	1	×	×		Capture input source is channel 4/count clock	Input capture at TCNT4 count-up/ count-down*1

× : Don't care

Notes: 1. When bits TPSC2 to TPSC0 in TCR4 are set to B'000 and ø/1 is used as the TCNT4 count clock, this setting is invalid and input capture is not generated.
2. When the BFB bit in TMDR3 is set to 1 and TGR3D is used as a buffer register, this setting is invalid and input capture/output compare is not generated.

Note: When TGRC or TGRD is designated for buffer operation, this setting is invalid and the register operates as a buffer register.

TIER3—Timer Interrupt Enable Register 3 H'FE84 TPU3

Bit :	7	6	5	4	3	2	1	0
	TTGE	—	—	TCIEV	TGIED	TGIEC	TGIEB	TGIEA
Initial value :	0	1	0	0	0	0	0	0
Read/Write :	R/W	—	—	R/W	R/W	R/W	R/W	R/W

TGR Interrupt Enable A

0	Interrupt requests (TGIA) by TGFA bit disabled
1	Interrupt requests (TGIA) by TGFA bit enabled

TGR Interrupt Enable B

0	Interrupt requests (TGIB) by TGFB bit disabled
1	Interrupt requests (TGIB) by TGFB bit enabled

TGR Interrupt Enable C

0	Interrupt requests (TGIC) by TGFC bit disabled
1	Interrupt requests (TGIC) by TGFC bit enabled

TGR Interrupt Enable D

0	Interrupt requests (TGID) by TGFD bit disabled
1	Interrupt requests (TGID) by TGFD bit enabled

Overflow Interrupt Enable

0	Interrupt requests (TCIV) by TCFV disabled
1	Interrupt requests (TCIV) by TCFV enabled

A/D Conversion Start Request Enable

0	A/D conversion start request generation disabled
1	A/D conversion start request generation enabled

TSR3—Timer Status Register 3 H'FE85 TPU3

Bit :	7	6	5	4	3	2	1	0
	—	—	—	TCFV	TGFD	TGFC	TGFB	TGFA
Initial value :	1	1	0	0	0	0	0	0
Read/Write :	—	—	—	R/(W)*	R/(W)*	R/(W)*	R/(W)*	R/(W)*

Input Capture/Output Compare Flag A

0	[Clearing conditions] • When DTC is activated by TGIA interrupt while DISEL bit of MRB in DTC is 0 • When DMAC is activated by TGIA interrupt while DTA bit of DMABCR in DMAC is 1 • When 0 is written to TGFA after reading TGFA = 1
1	[Setting conditions] • When TCNT=TGRA while TGRA is functioning as output compare register • When TCNT value is transferred to TGRA by input capture signal while TGRA is functioning as input capture register

Input Capture/Output Compare Flag B

0	[Clearing conditions] • When DTC is activated by TGIB interrupt while DISEL bit of MRB in DTC is 0 • When 0 is written to TGFB after reading TGFB = 1
1	[Setting conditions] • When TCNT = TGRB while TGRB is functioning as output compare register • When TCNT value is transferred to TGRB by input capture signal while TGRB is functioning as input capture register

Input Capture/Output Compare Flag C

0	[Clearing conditions] • When DTC is activated by TGIC interrupt while DISEL bit of MRB in DTC is 0 • When 0 is written to TGFC after reading TGFC = 1
1	[Setting conditions] • When TCNT = TGRC while TGRC is functioning as output compare register • When TCNT value is transferred to TGRC by input capture signal while TGRC is functioning as input capture register

Input Capture/Output Compare Flag D

0	[Clearing conditions] • When DTC is activated by TGID interrupt while DISEL bit of MRB in DTC is 0 • When 0 is written to TGFD after reading TGFD = 1
1	[Setting conditions] • When TCNT = TGRD while TGRD is functioning as output compare register • When TCNT value is transferred to TGRD by input capture signal while TGRD is functioning as input capture register

Overflow Flag

0	[Clearing condition] When 0 is written to TCFV after reading TCFV = 1
1	[Setting condition] When the TCNT value overflows (changes from H'FFFF to H'0000)

Note: * Can only be written with 0 for flag clearing.

TCNT3—Timer Counter 3 H'FE86 TPU3

Bit :	15	14	13	12	11	10	9	8	7	6	5	4	3	2	1	0
Initial value :	0	0	0	0	0	0	0	0	0	0	0	0	0	0	0	0
Read/Write :	R/W	R/W	R/W	R/W	R/W	R/W	R/W	R/W	R/W	R/W	R/W	R/W	R/W	R/W	R/W	R/W

Up-counter

TGR3A—Timer General Register 3A **H'FE88** **TPU3**
TGR3B—Timer General Register 3B **H'FE8A** **TPU3**
TGR3C—Timer General Register 3C **H'FE8C** **TPU3**
TGR3D—Timer General Register 3D **H'FE8E** **TPU3**

Bit :	15	14	13	12	11	10	9	8	7	6	5	4	3	2	1	0
Initial value :	1	1	1	1	1	1	1	1	1	1	1	1	1	1	1	1
Read/Write :	R/W	R/W	R/W	R/W	R/W	R/W	R/W	R/W	R/W	R/W	R/W	R/W	R/W	R/W	R/W	R/W

TCR4—Timer Control Register 4 **H'FE90** **TPU4**

Bit :	7	6	5	4	3	2	1	0
	—	CCLR1	CCLR0	CKEG1	CKEG0	TPSC2	TPSC1	TPSC0
Initial value :	0	0	0	0	0	0	0	0
Read/Write :	—	R/W	R/W	R/W	R/W	R/W	R/W	R/W

Timer Prescaler

0	0	0	Internal clock: counts on ø/1
		1	Internal clock: counts on ø/4
	1	0	Internal clock: counts on ø/16
		1	Internal clock: counts on ø/64
1	0	0	External clock: counts on TCLKA pin input
		1	External clock: counts on TCLKC pin input
	1	0	Internal clock: counts on ø/1024
		1	Counts on TCNT5 overflow/underflow

Note: This setting is ignored when channel 4 is in phase counting mode.

Clock Edge

0	0	Count at rising edge
	1	Count at falling edge
1	—	Count at both edges

Note: This setting is ignored when channel 4 is in phase counting mode.

Counter Clear

0	0	TCNT clearing disabled
	1	TCNT cleared by TGRA compare match/input capture
1	0	TCNT cleared by TGRB compare match/input capture
	1	TCNT cleared by counter clearing for another channel performing synchronous clearing/synchronous operation*

Note: * Synchronous operating setting is performed by setting the SYNC bit TSYR to 1.

TMDR4—Timer Mode Register 4 **H'FE91** **TPU4**

Bit :	7	6	5	4	3	2	1	0
	—	—	—	—	MD3	MD2	MD1	MD0
Initial value :	1	1	0	0	0	0	0	0
Read/Write :	—	—	—	—	R/W	R/W	R/W	R/W

Mode

0	0	0	0	Normal operation
			1	Reserved
		1	0	PWM mode 1
			1	PWM mode 2
	1	0	0	Phase counting mode 1
			1	Phase counting mode 2
		1	0	Phase counting mode 3
			1	Phase counting mode 4
1	×	×	×	—

× : Don't care

Note: MD3 is a reserved bit. In a write, it should always be written with 0.

TIOR4—Timer I/O Control Register 4 H'FE92 TPU4

Bit :	7	6	5	4	3	2	1	0
	IOB3	IOB2	IOB1	IOB0	IOA3	IOA2	IOA1	IOA0
Initial value :	0	0	0	0	0	0	0	0
Read/Write :	R/W	R/W	R/W	R/W	R/W	R/W	R/W	R/W

TGR4A I/O Control

0	0	0	0	TGR4A is output compare register	Output disabled	
			1		Initial output is 0 output	0 output at compare match
		1	0			1 output at compare match
			1			Toggle output at compare match
	1	0	0		Output disabled	
			1		Initial output is 1 output	0 output at compare match
		1	0			1 output at compare match
			1			Toggle output at compare match
1	0	0	0	TGR4A is input capture register	Capture input source is TIOCA4 pin	Input capture at rising edge
			1			Input capture at falling edge
		1	×			Input capture at both edges
	1	×	×		Capture input source is TGR3A compare match/ input capture	Input capture at generation of TGR3A compare match/input capture

×: Don't care

TGR4B I/O Control

0	0	0	0	TGR4B is output compare register	Output disabled	
			1		Initial output is 0 output	0 output at compare match
		1	0			1 output at compare match
			1			Toggle output at compare match
	1	0	0		Output disabled	
			1		Initial output is 1 output	0 output at compare match
		1	0			1 output at compare match
			1			Toggle output at compare match
1	0	0	0	TGR4B is input capture register	Capture input source is TIOCB4 pin	Input capture at rising edge
			1			Input capture at falling edge
		1	×			Input capture at both edges
	1	×	×		Capture input source is TGR3C compare match/ input capture	Input capture at generation of TGR3C compare match/input capture

×: Don't care

TIER4—Timer Interrupt Enable Register 4 H'FE94 TPU4

Bit :	7	6	5	4	3	2	1	0
	TTGE	—	TCIEU	TCIEV	—	—	TGIEB	TGIEA
Initial value :	0	1	0	0	0	0	0	0
Read/Write :	R/W	—	R/W	R/W	—	—	R/W	R/W

TGR Interrupt Enable A

0	Interrupt requests (TGIA) by TGFA bit disabled
1	Interrupt requests (TGIA) by TGFA bit enabled

TGR Interrupt Enable B

0	Interrupt requests (TGIB) by TGFB bit disabled
1	Interrupt requests (TGIB) by TGFB bit enabled

Overflow Interrupt Enable

0	Interrupt requests (TCIV) by TCFV disabled
1	Interrupt requests (TCIV) by TCFV enabled

Underflow Interrupt Enable

0	Interrupt requests (TCIU) by TCFU disabled
1	Interrupt requests (TCIU) by TCFU enabled

A/D Conversion Start Request Enable

0	A/D conversion start request generation disabled
1	A/D conversion start request generation enabled

TSR4—Timer Status Register 4 H'FE95 TPU4

Bit	7	6	5	4	3	2	1	0
	TCFD	—	TCFU	TCFV	—	—	TGFB	TGFA
Initial value	1	1	0	0	0	0	0	0
Read/Write	R	—	R/(W)*	R/(W)*	—	—	R/(W)*	R/(W)*

Input Capture/Output Compare Flag A

0	[Clearing conditions] • When DTC is activated by TGIA interrupt while DISEL bit of MRB in DTC is 0 • When DMAC is activated by TGIA interrupt while DTA bit of DMABCR in DMAC is 1 • When 0 is written to TGFA after reading TGFA = 1
1	[Setting conditions] • When TCNT = TGRA while TGRA is functioning as output compare register • When TCNT value is transferred to TGRA by input capture signal while TGRA is functioning as input capture register

Input Capture/Output Compare Flag B

0	[Clearing conditions] • When DTC is activated by TGIB interrupt while DISEL bit of MRB in DTC is 0 • When 0 is written to TGFB after reading TGFB = 1
1	[Setting conditions] • When TCNT = TGRB while TGRB is functioning as output compare register • When TCNT value is transferred to TGRB by input capture signal while TGRB is functioning as input capture register

Overflow Flag

0	[Clearing condition] When 0 is written to TCFV after reading TCFV = 1
1	[Setting condition] When the TCNT value overflows (changes from H'FFFF to H'0000)

Underflow Flag

0	[Clearing condition] When 0 is written to TCFU after reading TCFU = 1
1	[Setting condition] When the TCNT value underflows (changes from H'0000 to H'FFFF)

Count Direction Flag

0	TCNT counts down
1	TCNT counts up

Note: * Can only be written with 0 for flag clearing.

TCNT4—Timer Counter 4 H'FE96 TPU4

Bit	15	14	13	12	11	10	9	8	7	6	5	4	3	2	1	0
Initial value	0	0	0	0	0	0	0	0	0	0	0	0	0	0	0	0
Read/Write	R/W	R/W	R/W	R/W	R/W	R/W	R/W	R/W	R/W	R/W	R/W	R/W	R/W	R/W	R/W	R/W

Up/down-counter*

Note: * This timer counter can be used as an up/down-counter only in phase counting mode or when performing overflow/underflow counting on another channel. In other cases it functions as an up-counter.

TGR4A—Timer General Register 4A **H'FE98** **TPU4**
TGR4B—Timer General Register 4B **H'FE9A** **TPU4**

Bit :	15	14	13	12	11	10	9	8	7	6	5	4	3	2	1	0
Initial value :	1	1	1	1	1	1	1	1	1	1	1	1	1	1	1	1
Read/Write :	R/W	R/W	R/W	R/W	R/W	R/W	R/W	R/W	R/W	R/W	R/W	R/W	R/W	R/W	R/W	R/W

TCR5—Timer Control Register 5 **H'FEA0** **TPU5**

Bit :	7	6	5	4	3	2	1	0
	—	CCLR1	CCLR0	CKEG1	CKEG0	TPSC2	TPSC1	TPSC0
Initial value :	0	0	0	0	0	0	0	0
Read/Write :	—	R/W	R/W	R/W	R/W	R/W	R/W	R/W

Time Prescaler

0	0	0	Internal clock: counts on ø/1
		1	Internal clock: counts on ø/4
	1	0	Internal clock: counts on ø/16
		1	Internal clock: counts on ø/64
1	0	0	External clock: counts on TCLKA pin input
		1	External clock: counts on TCLKC pin input
	1	0	Internal clock: counts on ø/256
		1	External clock: counts on TCLKD pin input

Note: This setting is ignored when channel 5 is in phase counting mode.

Clock Edge

0	0	Count at rising edge
	1	Count at falling edge
1	—	Count at both edges

Note: This setting is ignored when channel 5 is in phase counting mode.

Counter Clear

0	0	TCNT clearing disabled
	1	TCNT cleared by TGRA compare match/input capture
1	0	TCNT cleared by TGRB compare match/input capture
	1	TCNT cleared by counter clearing for another channel performing synchronous clearing/synchronous operation*

Note: * Synchronous operating setting is performed by setting the SYNC bit TSYR to 1.

TMDR5—Timer Mode Register 5 **H'FEA1** **TPU5**

Bit :	7	6	5	4	3	2	1	0
	—	—	—	—	MD3	MD2	MD1	MD0
Initial value :	1	1	0	0	0	0	0	0
Read/Write :	—	—	—	—	R/W	R/W	R/W	R/W

Mode

0	0	0	0	Normal operation
			1	Reserved
		1	0	PWM mode 1
			1	PWM mode 2
	1	0	0	Phase counting mode 1
			1	Phase counting mode 2
		1	0	Phase counting mode 3
			1	Phase counting mode 4
1	×	×	×	—

× : Don't care

Note: MD3 is a reserved bit. In a write, it should always be written with 0.

TIOR5—Timer I/O Control Register 5 H'FEA2 TPU5

Bit :	7	6	5	4	3	2	1	0
	IOB3	IOB2	IOB1	IOB0	IOA3	IOA2	IOA1	IOA0
Initial value :	0	0	0	0	0	0	0	0
Read/Write :	R/W	R/W	R/W	R/W	R/W	R/W	R/W	R/W

TGR5A I/O Control

0	0	0	0	TGR5A is output compare register	Output disabled	
			1		Initial output is 0 output	0 output at compare match
		1	0			1 output at compare match
			1			Toggle output at compare match
	1	0	0		Output disabled	
			1		Initial output is 1 output	0 output at compare match
		1	0			1 output at compare match
			1			Toggle output at compare match
1	×	0	0	TGR5A is input capture register	Capture input source is TIOCA5 pin	Input capture at rising edge
			1			Input capture at falling edge
		1	×			Input capture at both edges

× : Don't care

TGR5B I/O Control

0	0	0	0	TGR5B is output compare register	Output disabled	
			1		Initial output is 0 output	0 output at compare match
		1	0			1 output at compare match
			1			Toggle output at compare match
	1	0	0		Output disabled	
			1		Initial output is 1 output	0 output at compare match
		1	0			1 output at compare match
			1			Toggle output at compare match
1	×	0	0	TGR5B is input capture register	Capture input source is TIOCB5 pin	Input capture at rising edge
			1			Input capture at falling edge
		1	×			Input capture at both edges

× : Don't care

TIER5—Timer Interrupt Enable Register 5 H'FEA4 TPU5

Bit :	7	6	5	4	3	2	1	0
	TTGE	—	TCIEU	TCIEV	—	—	TGIEB	TGIEA
Initial value :	0	1	0	0	0	0	0	0
Read/Write :	R/W	—	R/W	R/W	—	—	R/W	R/W

TGR Interrupt Enable A

0	Interrupt requests (TGIA) by TGFA bit disabled
1	Interrupt requests (TGIA) by TGFA bit enabled

TGR Interrupt Enable B

0	Interrupt requests (TGIB) by TGFB bit disabled
1	Interrupt requests (TGIB) by TGFB bit enabled

Overflow Interrupt Enable

0	Interrupt requests (TCIV) by TCFV disabled
1	Interrupt requests (TCIV) by TCFV enabled

Underflow Interrupt Enable

0	Interrupt requests (TCIU) by TCFU disabled
1	Interrupt requests (TCIU) by TCFU enabled

A/D Conversion Start Request Enable

0	A/D conversion start request generation disabled
1	A/D conversion start request generation enabled

TSR5—Timer Status Register 5 H'FEA5 TPU5

Bit	7	6	5	4	3	2	1	0
	TCFD	—	TCFU	TCFV	—	—	TGFB	TGFA
Initial value	1	1	0	0	0	0	0	0
Read/Write	R	—	R/(W)*	R/(W)*	—	—	R/(W)*	R/(W)*

Input Capture/Output Compare Flag A

0	[Clearing conditions] • When DTC is activated by TGIA interrupt while DISEL bit of MRB in DTC is 0 • When DMAC is activated by TGIA interrupt while DTA bit of DMABCR in DMAC is 1 • When 0 is written to TGFA after reading TGFA = 1
1	[Setting conditions] • When TCNT = TGRA while TGRA is functioning as output compare register • When TCNT value is transferred to TGRA by input capture signal while TGRA is functioning as input capture register

Input Capture/Output Compare Flag B

0	[Clearing conditions] • When DTC is activated by TGIB interrupt while DISEL bit of MRB in DTC is 0 • When 0 is written to TGFB after reading TGFB = 1
1	[Setting conditions] • When TCNT = TGRB while TGRB is functioning as output compare register • When TCNT value is transferred to TGRB by input capture signal while TGRB is functioning as input capture register

Overflow Flag

0	[Clearing condition] When 0 is written to TCFV after reading TCFV = 1
1	[Setting condition] When the TCNT value overflows (changes from H'FFFF to H'0000)

Underflow Flag

0	[Clearing condition] When 0 is written to TCFU after reading TCFU = 1
1	[Setting condition] When the TCNT value underflows (changes from H'0000 to H'FFFF)

Count Direction Flag

0	TCNT counts down
1	TCNT counts up

Note: * Can only be written with 0 for flag clearing.

TCNT5—Timer Counter 5 H'FEA6 TPU5

Bit	15	14	13	12	11	10	9	8	7	6	5	4	3	2	1	0
Initial value	0	0	0	0	0	0	0	0	0	0	0	0	0	0	0	0
Read/Write	R/W	R/W	R/W	R/W	R/W	R/W	R/W	R/W	R/W	R/W	R/W	R/W	R/W	R/W	R/W	R/W

Up/down-counter*

Note: * This timer counter can be used as an up/down-counter only in phase counting mode or when performing overflow/underflow counting on another channel. In other cases it functions as an up-counter.

TGR5A—Timer General Register 5A **H'FEA8** **TPU5**
TGR5B—Timer General Register 5B **H'FEAA** **TPU5**

Bit :	15	14	13	12	11	10	9	8	7	6	5	4	3	2	1	0
Initial value :	1	1	1	1	1	1	1	1	1	1	1	1	1	1	1	1
Read/Write :	R/W	R/W	R/W	R/W	R/W	R/W	R/W	R/W	R/W	R/W	R/W	R/W	R/W	R/W	R/W	R/W

P1DDR—Port 1 Data Direction Register **H'FEB0** **Port 1**

Bit :	7	6	5	4	3	2	1	0
	P17DDR	P16DDR	P15DDR	P14DDR	P13DDR	P12DDR	P11DDR	P10DDR
Initial value :	0	0	0	0	0	0	0	0
Read/Write :	W	W	W	W	W	W	W	W

Specify input or output for individual port 1 pins

P2DDR—Port 2 Data Direction Register **H'FEB1** **Port 2**

Bit :	7	6	5	4	3	2	1	0
	P27DDR	P26DDR	P25DDR	P24DDR	P23DDR	P22DDR	P21DDR	P20DDR
Initial value :	0	0	0	0	0	0	0	0
Read/Write :	W	W	W	W	W	W	W	W

Specify input or output for individual port 2 pins

P3DDR—Port 3 Data Direction Register **H'FEB2** **Port 3**

Bit :	7	6	5	4	3	2	1	0
	—	—	P35DDR	P34DDR	P33DDR	P32DDR	P31DDR	P30DDR
Initial value :	Undefined	Undefined	0	0	0	0	0	0
Read/Write :	—	—	W	W	W	W	W	W

Specify input or output for individual port 3 pins

P5DDR—Port 5 Data Direction Register **H'FEB4** **Port 5**

Bit :	7	6	5	4	3	2	1	0
	—	—	—	—	P53DDR	P52DDR	P51DDR	P50DDR
Initial value :	Undefined	Undefined	Undefined	Undefined	0	0	0	0
Read/Write :	—	—	—	—	W	W	W	W

Specify input or output for individual port 5 pins

P6DDR—Port 6 Data Direction Register **H'FEB5** **Port 6**

Bit :	7	6	5	4	3	2	1	0
	P67DDR	P66DDR	P65DDR	P64DDR	P63DDR	P62DDR	P61DDR	P60DDR
Initial value :	0	0	0	0	0	0	0	0
Read/Write :	W	W	W	W	W	W	W	W

Specify input or output for individual port 6 pins

PADDR—Port A Data Direction Register **H'FEB9** **Port A**

Bit :	7	6	5	4	3	2	1	0
	PA7DDR	PA6DDR	PA5DDR	PA4DDR	PA3DDR	PA2DDR	PA1DDR	PA0DDR
Initial value :	0	0	0	0	0	0	0	0
Read/Write :	W	W	W	W	W	W	W	W

Specify input or output for individual port A pins

PBDDR—Port B Data Direction Register **H'FEBA** **Port B**
[On-chip ROM version Only]

Bit :	7	6	5	4	3	2	1	0
	PB7DDR	PB6DDR	PB5DDR	PB4DDR	PB3DDR	PB2DDR	PB1DDR	PB0DDR
Initial value :	0	0	0	0	0	0	0	0
Read/Write :	W	W	W	W	W	W	W	W

Specify input or output for individual port B pins

PCDDR—Port C Data Direction Register **H'FEBB** **Port C**
[On-chip ROM version Only]

Bit :	7	6	5	4	3	2	1	0
	PC7DDR	PC6DDR	PC5DDR	PC4DDR	PC3DDR	PC2DDR	PC1DDR	PC0DDR
Initial value :	0	0	0	0	0	0	0	0
Read/Write :	W	W	W	W	W	W	W	W

Specify input or output for individual port C pins

PDDDR—Port D Data Direction Register **H'FEBC** **Port D**
[On-chip ROM version Only]

Bit :	7	6	5	4	3	2	1	0
	PD7DDR	PD6DDR	PD5DDR	PD4DDR	PD3DDR	PD2DDR	PD1DDR	PD0DDR
Initial value :	0	0	0	0	0	0	0	0
Read/Write :	W	W	W	W	W	W	W	W

Specify input or output for individual port D pins

PEDDR—Port E Data Direction Register **H'FEBD** **Port E**

Bit :	7	6	5	4	3	2	1	0
	PE7DDR	PE6DDR	PE5DDR	PE4DDR	PE3DDR	PE2DDR	PE1DDR	PE0DDR
Initial value :	0	0	0	0	0	0	0	0
Read/Write :	W	W	W	W	W	W	W	W

Specify input or output for individual port E pins

PFDDR—Port F Data Direction Register **H'FEBE** **Port F**

Bit :	7	6	5	4	3	2	1	0
	PF7DDR	PF6DDR	PF5DDR	PF4DDR	PF3DDR	PF2DDR	PF1DDR	PF0DDR
Modes 4 to 6								
Initial value :	1	0	0	0	0	0	0	0
Read/Write :	W	W	W	W	W	W	W	W
Mode 7								
Initial value :	0	0	0	0	0	0	0	0
Read/Write :	W	W	W	W	W	W	W	W

Specify input or output for individual port F pins

PGDDR—Port G Data Direction Register **H'FEBF** **Port G**

Bit :	7	6	5	4	3	2	1	0
	—	—	—	PG4DDR	PG3DDR	PG2DDR	PG1DDR	PG0DDR
Modes 4, 5								
Initial value :	Undefined	Undefined	Undefined	1	0	0	0	0
Read/Write :	—	—	—	W	W	W	W	W
Modes 6, 7								
Initial value :	Undefined	Undefined	Undefined	0	0	0	0	0
Read/Write :	—	—	—	W	W	W	W	W

Specify input or output for individual port G pins

IPRA	**— Interrupt Priority Register A**	**H'FEC4**	**Interrupt Controller**
IPRB	**— Interrupt Priority Register B**	**H'FEC5**	**Interrupt Controller**
IPRC	**— Interrupt Priority Register C**	**H'FEC6**	**Interrupt Controller**
IPRD	**— Interrupt Priority Register D**	**H'FEC7**	**Interrupt Controller**
IPRE	**— Interrupt Priority Register E**	**H'FEC8**	**Interrupt Controller**
IPRF	**— Interrupt Priority Register F**	**H'FEC9**	**Interrupt Controller**
IPRG	**— Interrupt Priority Register G**	**H'FECA**	**Interrupt Controller**
IPRH	**— Interrupt Priority Register H**	**H'FECB**	**Interrupt Controller**
IPRI	**— Interrupt Priority Register I**	**H'FECC**	**Interrupt Controller**
IPRJ	**— Interrupt Priority Register J**	**H'FECD**	**Interrupt Controller**
IPRK	**— Interrupt Priority Register K**	**H'FECE**	**Interrupt Controller**

Bit :	7	6	5	4	3	2	1	0
	—	IPR6	IPR5	IPR4	—	IPR2	IPR1	IPR0
Initial value :	0	1	1	1	0	1	1	1
Read/Write :	—	R/W	R/W	R/W	—	R/W	R/W	R/W

Set priority (levels 7 to 0) for interrupt sources

Correspondence between Interrupt Sources and IPR Settings

Register	Bits	
	6 to 4	2 to 0
IPRA	IRQ0	IRQ1
IPRB	IRQ2 IRQ3	IRQ4 IRQ5
IPRC	IRQ6 IRQ7	DTC
IPRD	WDT	Refresh timer
IPRE	—*	A/D converter
IPRF	TPU channel 0	TPU channel 1
IPRG	TPU channel 2	TPU channel 3
IPRH	TPU channel 4	TPU channel 5
IPRI	8-bit timer channel 0	8-bit timer channel 1
IPRJ	DMAC	SCI channel 0
IPRK	SCI channel 1	SCI channel 2

Note: * Reserved bits. These bits cannot be modified and are always read as 1.

ABWCR—Bus Width Control Register **H'FED0** **Bus Controller**

Bit :	7	6	5	4	3	2	1	0
	ABW7	ABW6	ABW5	ABW4	ABW3	ABW2	ABW1	ABW0
Modes 5 to 7								
Initial value :	1	1	1	1	1	1	1	1
R/W :	R/W	R/W	R/W	R/W	R/W	R/W	R/W	R/W
Mode 4								
Initial value :	0	0	0	0	0	0	0	0
Read/Write :	R/W	R/W	R/W	R/W	R/W	R/W	R/W	R/W

Area 7 to 0 Bus Width Control

0	Area n is designated for 16-bit access
1	Area n is designated for 8-bit access

(n = 7 to 0)

Note: * Modes 6 and 7 are provided in the On-chip ROM version only.

ASTCR—Access State Control Register **H'FED1** **Bus Controller**

Bit :	7	6	5	4	3	2	1	0
	AST7	AST6	AST5	AST4	AST3	AST2	AST1	AST0
Initial value :	1	1	1	1	1	1	1	1
Read/Write :	R/W	R/W	R/W	R/W	R/W	R/W	R/W	R/W

Area 7 to 0 Access State Control

0	Area n is designated for 2-state access Wait state insertion in area n external space is disabled
1	Area n is designated for 3-state access Wait state insertion in area n external space is enabled

(n = 7 to 0)

WCRH—Wait Control Register H **H'FED2** **Bus Controller**

Bit :	7	6	5	4	3	2	1	0
	W71	W70	W61	W60	W51	W50	W41	W40
Initial value :	1	1	1	1	1	1	1	1
Read/Write :	R/W	R/W	R/W	R/W	R/W	R/W	R/W	R/W

Area 4 Wait Control

0	0	Program wait not inserted
	1	1 program wait state inserted
1	0	2 program wait states inserted
	1	3 program wait states inserted

Area 5 Wait Control

0	0	Program wait not inserted
	1	1 program wait state inserted
1	0	2 program wait states inserted
	1	3 program wait states inserted

Area 6 Wait Control

0	0	Program wait not inserted
	1	1 program wait state inserted
1	0	2 program wait states inserted
	1	3 program wait states inserted

Area 7 Wait Control

0	0	Program wait not inserted
	1	1 program wait state inserted
1	0	2 program wait states inserted
	1	3 program wait states inserted

WCRL—Wait Control Register L **H'FED3** **Bus Controller**

Bit :	7	6	5	4	3	2	1	0
	W31	W30	W21	W20	W11	W10	W01	W00
Initial value :	1	1	1	1	1	1	1	1
Read/Write :	R/W	R/W	R/W	R/W	R/W	R/W	R/W	R/W

Area 0 Wait Control

0	0	Program wait not inserted
	1	1 program wait state inserted
1	0	2 program wait states inserted
	1	3 program wait states inserted

Area 1 Wait Control

0	0	Program wait not inserted
	1	1 program wait state inserted
1	0	2 program wait states inserted
	1	3 program wait states inserted

Area 2 Wait Control

0	0	Program wait not inserted
	1	1 program wait state inserted
1	0	2 program wait states inserted
	1	3 program wait states inserted

Area 3 Wait Control

0	0	Program wait not inserted
	1	1 program wait state inserted
1	0	2 program wait states inserted
	1	3 program wait states inserted

BCRH—Bus Control Register H **H'FED4** **Bus Controller**

Bit :	7	6	5	4	3	2	1	0
	ICIS1	ICIS0	BRSTRM	BRSTS1	BRSTS0	RMTS2	RMTS1	RMTS0
Initial value :	1	1	0	1	0	0	0	0
Read/Write :	R/W	R/W	R/W	R/W	R/W	R/W	R/W	R/W

RAM Type Select

RMTS2	RMTS1	RMTS0	Area 5	Area 4	Area 3	Area 2
0	0	0	Normal space			
		1	Normal space			DRAM space
	1	0	Normal space		DRAM space	
		1	DRAM space			
1	—	—	—			

Note: When areas selected in DRAM space are all 8-bit space, the PF_2 pin can be used as an I/O port, $\overline{BREQO}$, or $\overline{WAIT}$.

Burst Cycle Select 0

0	Max. 4 words in burst access
1	Max. 8 words in burst access

Burst Cycle Select 1

0	Burst cycle comprises 1 state
1	Burst cycle comprises 2 states

Area 0 Burst ROM Enable

0	Area 0 is basic bus interface
1	Area 0 is burst ROM interface

Idle Cycle Insert 0

0	Idle cycle not inserted in case of successive external read and external write cycles
1	Idle cycle inserted in case of successive external read and external write cycles

Idle Cycle Insert 1

0	Idle cycle not inserted in case of successive external read cycles in different areas
1	Idle cycle inserted in case of successive external read cycles in different areas

Bit :	7	6	5	4	3	2	1	0
	BRLE	BREQOE	EAE	LCASS	DDS	—	WDBE	WAITE
Initial value :	0	0	1	1	1	1	0	0
Read/Write :	R/W	R/W	R/W	R/W	R/W	R/W	R/W	R/W

WAIT Pin Enable

0	Wait input by $\overline{\text{WAIT}}$ pin disabled
1	Wait input by $\overline{\text{WAIT}}$ pin enabled

Write Data Buffer Enable

0	Write data buffer function not used
1	Write data buffer function used

Reserved
Only 1 should be written to this bit

DACK Timing Select

0	When DMAC single address transfer is performed in DRAM/PSRAM space, full access is always executed $\overline{\text{DACK}}$ signal goes low from T_r or T_1 cycle
1	Burst access is possible when DMAC single address transfer is performed in DRAM/PSRAM space $\overline{\text{DACK}}$ signal goes low from T_{c1} or T_2 cycle

LCAS Select
Write 0 to this bit when using the DRAM interface

External Addresses H'010000 to H'01FFFF*1 Enable

0	On-chip ROM
1	External addresses (in external expansion mode) or reserved area*2 (in single-chip mode)

Notes: 1. External addresses H'010000 to H'01FFFF for the H8S/2357
External addresses H'010000 to H'03FFFF for the H8S/2398
2. Do not access a reserved area.

BREQO Pin Enable

0	$\overline{\text{BREQO}}$ output disabled
1	$\overline{\text{BREQO}}$ output enabled

Bus Release Enable

0	External bus release is disabled
1	External bus release is enabled

MCR—Memory Control Register **H'FED6** **Bus Controller**

Bit :	7	6	5	4	3	2	1	0
	TPC	BE	RCDM	CW2	MXC1	MXC0	RLW1	RLW0
Initial value :	0	0	0	0	0	0	0	0
Read/Write :	R/W	R/W	R/W	R/W	R/W	R/W	R/W	R/W

Refresh Cycle Wait Control

0	0	No wait state inserted
	1	1 wait state inserted
1	0	2 wait states inserted
	1	3 wait states inserted

Multiplex Shift Count

0	0	8-bit shift
	1	9-bit shift
1	0	10-bit shift
	1	—

2-CAS Method Select

0	16-bit DRAM space selected
1	8-bit DRAM space selected

RAS/CS Down Mode

0	DRAM interface: RAS up mode selected
1	DRAM interface: RAS down mode selected

Burst Access Enable

0	Burst disabled (always full access)
1	For DRAM space access, access in fast page mode

TP Cycle Control

0	1-state precharge cycle is inserted
1	2-state precharge cycle is inserted

DRAMCR—DRAM Control Register H'FED7 Bus Controller

Bit :	7	6	5	4	3	2	1	0
	RFSHE	RCW	RMODE	CMF	CMIE	CKS2	CKS1	CKS0
Initial value :	0	0	0	0	0	0	0	0
Read/Write :	R/W	R/W	R/W	R/W	R/W	R/W	R/W	R/W

Refresh Counter Clock Select

0	0	0	Count operation disabled
		1	Count uses ø/2
	1	0	Count uses ø/8
		1	Count uses ø/32
1	0	0	Count uses ø/128
		1	Count uses ø/512
	1	0	Count uses ø/2048
		1	Count uses ø/4096

Compare Match Interrupt Enable

0	Interrupt request (CMI) by CMF flag disabled
1	Interrupt request (CMI) by CMF flag enabled

Compare Match Flag

0	[Clearing condition] Cleared by reading the CMF flag when CMF = 1, then writing 0 to the CMF flag
1	[Setting condition] Set when RTCNT = RTCOR

Refresh Mode

0	DRAM interface: CAS-before-RAS refreshing used
1	Self-refreshing used

RAS-CAS Wait

0	Wait state insertion in CAS-before-RAS refreshing disabled $\overline{RAS}$ falls in T_{Rr} cycle
1	One wait state inserted in CAS-before-RAS refreshing $\overline{RAS}$ falls in T_{Rc1} cycle

Refresh Control

0	Refresh control is not performed
1	Refresh control is performed

RTCNT—Refresh Timer Counter H'FED8 Bus Controller

Bit :	7	6	5	4	3	2	1	0
Initial value :	0	0	0	0	0	0	0	0
Read/Write :	R/W	R/W	R/W	R/W	R/W	R/W	R/W	R/W

Internal clock count value

RTCOR—Refresh Time Constant Register **H'FED9** **Bus Controller**

Bit	7	6	5	4	3	2	1	0
Initial value	1	1	1	1	1	1	1	1
Read/Write	R/W	R/W	R/W	R/W	R/W	R/W	R/W	R/W

Sets the period for compare match operations with RTCNT

RAMER—RAM Emulation Register **H'FEDB** **Bus Controller**
[for H8S/2398F-ZTAT Only]

Bit	7	6	5	4	3	2	1	0
	—	—	—	—	RAMS	RAM2	RAM1	RAM0
Initial value	0	0	0	0	0	0	0	0
Read/Write	—	—	—	—	R/W	R/W	R/W	R/W

RAM Select, Flash Memory Area Select

RAMS	RAM2	RAM1	RAM0	RAM Area	Block Name
0	×	×	×	H'FFDC00 to H'FFEBFF	RAM area of 4 kbytes
1	0	0	0	H'000000 to H'000FFF	EB0 (4 kbytes)
1	0	0	1	H'001000 to H'001FFF	EB1 (4 kbytes)
1	0	1	0	H'002000 to H'002FFF	EB2 (4 kbytes)
1	0	1	1	H'003000 to H'003FFF	EB3 (4 kbytes)
1	1	0	0	H'004000 to H'004FFF	EB4 (4 kbytes)
1	1	0	1	H'005000 to H'005FFF	EB5 (4 kbytes)
1	1	1	0	H'006000 to H'006FFF	EB6 (4 kbytes)
1	1	1	1	H'007000 to H'007FFF	EB7 (4 kbytes)

×: Don't care

RAMER—RAM Emulation Register **H'FEDB** **Bus Controller (for H8S/2357F-ZTAT only)**

Bit	7	6	5	4	3	2	1	0
	—	—	—	—	—	RAMS	RAM1	RAM0
Initial value	0	0	0	0	0	0	0	0
Read/Write	—	—	—	—	—	R/W	R/W	R/W

RAM Select, Flash Memory Area

RAMS	RAM1	RAM0	Area
0	×	×	H'FFDC00 to H'FFDFFF
1	0	0	H'000000 to H'0003FF
		1	H'000400 to H'0007FF
	1	0	H'000800 to H'000BFF
		1	H'000C00 to H'000FFF

×: Don't care

MAR0AH—Memory Address Register 0AH **H'FEE0** **DMAC**
MAR0AL—Memory Address Register 0AL **H'FEE2** **DMAC**

Bit	31	30	29	28	27	26	25	24	23	22	21	20	19	18	17	16
MAR0AH	—	—	—	—	—	—	—	—								
Initial value	0	0	0	0	0	0	0	0	*	*	*	*	*	*	*	*
Read/Write	—	—	—	—	—	—	—	—	R/W	R/W	R/W	R/W	R/W	R/W	R/W	R/W

Bit	15	14	13	12	11	10	9	8	7	6	5	4	3	2	1	0
MAR0AL																
Initial value	*	*	*	*	*	*	*	*	*	*	*	*	*	*	*	*
Read/Write	R/W	R/W	R/W	R/W	R/W	R/W	R/W	R/W	R/W	R/W	R/W	R/W	R/W	R/W	R/W	R/W

* : Undefined

In short address mode: Specifies transfer source/transfer destination address
In full address mode: Specifies transfer source address

IOAR0A—I/O Address Register 0A **H'FEE4** **DMAC**

Bit	15	14	13	12	11	10	9	8	7	6	5	4	3	2	1	0
IOAR0A																
Initial value	*	*	*	*	*	*	*	*	*	*	*	*	*	*	*	*
Read/Write	R/W	R/W	R/W	R/W	R/W	R/W	R/W	R/W	R/W	R/W	R/W	R/W	R/W	R/W	R/W	R/W

* : Undefined

In short address mode: Specifies transfer source/transfer destination address
In full address mode: Not used

ETCR0A—Transfer Count Register 0A **H'FEE6** **DMAC**

Bit :	15	14	13	12	11	10	9	8	7	6	5	4	3	2	1	0
ETCR0A :																
Initial value :	*	*	*	*	*	*	*	*	*	*	*	*	*	*	*	*
Read/Write :	R/W	R/W	R/W	R/W	R/W	R/W	R/W	R/W	R/W	R/W	R/W	R/W	R/W	R/W	R/W	R/W

Sequential mode Idle mode Normal mode	Transfer counter	
Repeat mode	Transfer number storage register	Transfer counter
Block transfer mode	Block size storage register	Block size counter

* : Undefined

MAR0BH—Memory Address Register 0BH **H'FEE8** **DMAC**
MAR0BL—Memory Address Register 0BL **H'FEEA** **DMAC**

Bit :	31	30	29	28	27	26	25	24	23	22	21	20	19	18	17	16
MAR0BH :	—	—	—	—	—	—	—	—								
Initial value :	0	0	0	0	0	0	0	0	*	*	*	*	*	*	*	*
Read/Write :	—	—	—	—	—	—	—	—	R/W	R/W	R/W	R/W	R/W	R/W	R/W	R/W

Bit :	15	14	13	12	11	10	9	8	7	6	5	4	3	2	1	0
MAR0BL :																
Initial value :	*	*	*	*	*	*	*	*	*	*	*	*	*	*	*	*
Read/Write :	R/W	R/W	R/W	R/W	R/W	R/W	R/W	R/W	R/W	R/W	R/W	R/W	R/W	R/W	R/W	R/W

* : Undefined

In short address mode: Specifies transfer source/transfer destination address
In full address mode: Specifies transfer destination address

IOAR0B—I/O Address Register 0B **H'FEEC** **DMAC**

Bit :	15	14	13	12	11	10	9	8	7	6	5	4	3	2	1	0
IOAR0B :																
Initial value :	*	*	*	*	*	*	*	*	*	*	*	*	*	*	*	*
Read/Write :	R/W	R/W	R/W	R/W	R/W	R/W	R/W	R/W	R/W	R/W	R/W	R/W	R/W	R/W	R/W	R/W

* : Undefined

In short address mode: Specifies transfer source/transfer destination address
In full address mode: Not used

ETCR0B—Transfer Count Register 0B **H'FEEE** **DMAC**

Bit	15	14	13	12	11	10	9	8	7	6	5	4	3	2	1	0
ETCR0B																
Initial value	*	*	*	*	*	*	*	*	*	*	*	*	*	*	*	*
Read/Write	R/W	R/W	R/W	R/W	R/W	R/W	R/W	R/W	R/W	R/W	R/W	R/W	R/W	R/W	R/W	R/W

Sequential mode and idle mode: Transfer counter

Repeat mode: Transfer number storage register | Transfer counter

Block transfer mode: Block transfer counter

* : Undefined

Note: Not used in normal mode.

MAR1AH—Memory Address Register 1AH **H'FEF0** **DMAC**
MAR1AL—Memory Address Register 1AL **H'FEF2** **DMAC**

Bit	31	30	29	28	27	26	25	24	23	22	21	20	19	18	17	16
MAR1AH	—	—	—	—	—	—	—	—								
Initial value	0	0	0	0	0	0	0	0	*	*	*	*	*	*	*	*
Read/Write	—	—	—	—	—	—	—	—	R/W	R/W	R/W	R/W	R/W	R/W	R/W	R/W

Bit	15	14	13	12	11	10	9	8	7	6	5	4	3	2	1	0
MAR1AL																
Initial value	*	*	*	*	*	*	*	*	*	*	*	*	*	*	*	*
Read/Write	R/W	R/W	R/W	R/W	R/W	R/W	R/W	R/W	R/W	R/W	R/W	R/W	R/W	R/W	R/W	R/W

* : Undefined

In short address mode: Specifies transfer source/transfer destination address
In full address mode: Specifies transfer source address

IOAR1A—I/O Address Register 1A **H'FEF4** **DMAC**

Bit	15	14	13	12	11	10	9	8	7	6	5	4	3	2	1	0
IOAR1A																
Initial value	*	*	*	*	*	*	*	*	*	*	*	*	*	*	*	*
Read/Write	R/W	R/W	R/W	R/W	R/W	R/W	R/W	R/W	R/W	R/W	R/W	R/W	R/W	R/W	R/W	R/W

* : Undefined

In short address mode: Specifies transfer source/transfer destination address
In full address mode: Not used

ETCR1A—Transfer Count Register 1A **H'FEF6** **DMAC**

Bit	15	14	13	12	11	10	9	8	7	6	5	4	3	2	1	0
ETCR1A																
Initial value	*	*	*	*	*	*	*	*	*	*	*	*	*	*	*	*
Read/Write	R/W	R/W	R/W	R/W	R/W	R/W	R/W	R/W	R/W	R/W	R/W	R/W	R/W	R/W	R/W	R/W

Sequential mode Idle mode Normal mode	Transfer counter	
Repeat mode	Transfer number storage register	Transfer counter
Block transfer mode	Block size storage register	Block size counter

* : Undefined

MAR1BH — Memory Address Register 1BH **H'FEF8** **DMAC**
MAR1BL — Memory Address Register 1BL **H'FEFA** **DMAC**

Bit	31	30	29	28	27	26	25	24	23	22	21	20	19	18	17	16
MAR1BH	—	—	—	—	—	—	—	—								
Initial value	0	0	0	0	0	0	0	0	*	*	*	*	*	*	*	*
Read/Write	—	—	—	—	—	—	—	—	R/W	R/W	R/W	R/W	R/W	R/W	R/W	R/W

Bit	15	14	13	12	11	10	9	8	7	6	5	4	3	2	1	0
MAR1BL																
Initial value	*	*	*	*	*	*	*	*	*	*	*	*	*	*	*	*
Read/Write	R/W	R/W	R/W	R/W	R/W	R/W	R/W	R/W	R/W	R/W	R/W	R/W	R/W	R/W	R/W	R/W

* : Undefined

In short address mode: Specifies transfer source/transfer destination address
In full address mode: Specifies transfer destination address

IOAR1B—I/O Address Register 1B **H'FEFC** **DMAC**

Bit :	15	14	13	12	11	10	9	8	7	6	5	4	3	2	1	0
IOAR1B :																
Initial value :	*	*	*	*	*	*	*	*	*	*	*	*	*	*	*	*
Read/Write :	R/W	R/W	R/W	R/W	R/W	R/W	R/W	R/W	R/W	R/W	R/W	R/W	R/W	R/W	R/W	R/W

* : Undefined

In short address mode: Specifies transfer source/transfer destination address
In full address mode: Not used

ETCR1B—Transfer Count Register 1B **H'FEFE** **DMAC**

Bit :	15	14	13	12	11	10	9	8	7	6	5	4	3	2	1	0
ETCR1B :																
Initial value :	*	*	*	*	*	*	*	*	*	*	*	*	*	*	*	*
Read/Write :	R/W	R/W	R/W	R/W	R/W	R/W	R/W	R/W	R/W	R/W	R/W	R/W	R/W	R/W	R/W	R/W

Sequential mode and idle mode	Transfer counter	
Repeat mode	Transfer number storage register	Transfer counter
Block transfer mode	Block transfer counter	

* : Undefined

Note: Not used in normal mode.

DMAWER—DMA Write Enable Register **H'FF00** **DMAC**

Bit :	7	6	5	4	3	2	1	0
DMAWER :	—	—	—	—	WE1B	WE1A	WE0B	WE0A
Initial value :	0	0	0	0	0	0	0	0
Read/Write :	—	—	—	—	R/W	R/W	R/W	R/W

Write Enable 0A

0	Writes to all bits in DMACR0A, and bits 8, 4, and 0 in DMABCR are disabled
1	Writes to all bits in DMACR0A, and bits 8, 4, and 0 in DMABCR are enabled

Write Enable 0B

0	Writes to all bits in DMACR0B, bits 9, 5, and 1 in DMABCR, and bit 4 in DMATCR are disabled
1	Writes to all bits in DMACR0B, bits 9, 5, and 1 in DMABCR, and bit 4 in DMATCR are enabled

Write Enable 1A

0	Writes to all bits in DMACR1A, and bits 10, 6, and 2 in DMABCR are disabled
1	Writes to all bits in DMACR1A, and bits 10, 6, and 2 in DMABCR are enabled

Write Enable 1B

0	Writes to all bits in DMACR1B, bits 11, 7, and 3 in DMABCR, and bit 5 in DMATCR are disabled
1	Writes to all bits in DMACR1B, bits 11, 7, and 3 in DMABCR, and bit 5 in DMATCR are enabled

DMATCR—DMA Terminal Control Register H'FF01 DMAC

Bit :	7	6	5	4	3	2	1	0
DMATCR :	—	—	TEE1	TEE0	—	—	—	—
Initial value :	0	0	0	0	0	0	0	0
Read/Write :	—	—	R/W	R/W	—	—	—	—

Transfer End Enable 0

0	$\overline{\text{TEND0}}$ pin output disabled
1	$\overline{\text{TEND0}}$ pin output enabled

Transfer End Enable 1

0	$\overline{\text{TEND1}}$ pin output disabled
1	$\overline{\text{TEND1}}$ pin output enabled

DMACR0A—DMA Control Register 0A H'FF02 DMAC
DMACR0B—DMA Control Register 0B H'FF03 DMAC
DMACR1A—DMA Control Register 1A H'FF04 DMAC
DMACR1B—DMA Control Register 1B H'FF05 DMAC

Full address mode

Bit :	15	14	13	12	11	10	9	8
DMACRA :	DTSZ	SAID	SAIDE	BLKDIR	BLKE	—	—	—
Initial value :	0	0	0	0	0	0	0	0
Read/Write :	R/W	R/W	R/W	R/W	R/W	R/W	R/W	R/W

Reserved
Only 0 should be written to this bit.

Block Direction/Block Enable

0	0	Transfer in normal mode
	1	Transfer in block transfer mode, destination side is block area
1	0	Transfer in normal mode
	1	Transfer in block transfer mode, source side is block area

Source Address Increment/Decrement

0	0	MARA is fixed
	1	MARA is incremented after a data transfer
1	0	MARA is fixed
	1	MARA is decremented after a data transfer

Data Transfer Size

0	Byte-size transfer
1	Word-size transfer

Full address mode (cont)

Bit :	7	6	5	4	3	2	1	0
DMACRB :	—	DAID	DAIDE	—	DTF3	DTF2	DTF1	DTF0
Initial value :	0	0	0	0	0	0	0	0
Read/Write :	R/W	R/W	R/W	R/W	R/W	R/W	R/W	R/W

Reserved
Only 0 should be written to this bit.

Reserved
Only 0 should be written to this bit.

Data Transfer Factor

DTF 3	DTF 2	DTF 1	DTF 0	Block Transfer Mode	Normal Mode
0	0	0	0	—	—
			1	Activated by A/D converter conversion end interrupt	—
		1	0	Activated by $\overline{\text{DREQ}}$ pin falling edge input	Activated by $\overline{\text{DREQ}}$ pin falling edge input
			1	Activated by $\overline{\text{DREQ}}$ pin low-level input	Activated by $\overline{\text{DREQ}}$ pin low-level input
	1	0	0	Activated by SCI channel 0 transmission data empty interrupt	—
			1	Activated by SCI channel 0 reception data full interrupt	—
		1	0	Activated by SCI channel 1 transmission data empty interrupt	Auto-request (cycle steal)
			1	Activated by SCI channel 1 reception data full interrupt	Auto-request (burst)
1	0	0	0	Activated by TPU channel 0 compare match/input capture A interrupt	—
			1	Activated by TPU channel 1 compare match/input capture A interrupt	—
		1	0	Activated by TPU channel 2 compare match/input capture A interrupt	—
			1	Activated by TPU channel 3 compare match/input capture A interrupt	—
	1	0	0	Activated by TPU channel 4 compare match/input capture A interrupt	—
			1	Activated by TPU channel 5 compare match/input capture A interrupt	—
		1	0	—	—
			1	—	—

Destination Address Increment/Decrement

0	0	MARB is fixed
	1	MARB is incremented after a data transfer
1	0	MARB is fixed
	1	MARB is decremented after a data transfer

Short address mode

Bit	7	6	5	4	3	2	1	0
DMACR	DTSZ	DTID	RPE	DTDIR	DTF3	DTF2	DTF1	DTF0
Initial value	0	0	0	0	0	0	0	0
Read/Write	R/W	R/W	R/W	R/W	R/W	R/W	R/W	R/W

Data Transfer Direction

0	Dual address mode: Transfer with MAR as source address and IOAR as destination address Single address mode: Transfer with MAR as source address and $\overline{\text{DACK}}$ pin as write strobe
1	Dual address mode: Transfer with IOAR as source address and MAR as destination address Single address mode: Transfer with $\overline{\text{DACK}}$ pin as read strobe and MAR as destination address

Repeat Enable

0	Transfer in sequential mode
1	Transfer in repeat mode or idle mode

Data Transfer Increment/Decrement

0	MAR is incremented after a data transfer
1	MAR is decremented after a data transfer

Data Transfer Size

0	Byte-size transfer
1	Word-size transfer

Data Transfer Factor

				Channel A	Channel B
0	0	0	0	—	
			1	Activated by A/D converter conversion end interrupt	
		1	0	—	Activated by $\overline{\text{DREQ}}$ pin falling edge input
			1	—	Activated by $\overline{\text{DREQ}}$ pin low-level input
	1	0	0	Activated by SCI channel 0 transmission data empty interrupt	
			1	Activated by SCI channel 0 reception data full interrupt	
		1	0	Activated by SCI channel 1 transmission data empty interrupt	
			1	Activated by SCI channel 1 reception data full interrupt	
1	0	0	0	Activated by TPU channel 0 compare match/input capture A interrupt	
			1	Activated by TPU channel 1 compare match/input capture A interrupt	
		1	0	Activated by TPU channel 2 compare match/input capture A interrupt	
			1	Activated by TPU channel 3 compare match/input capture A interrupt	
	1	0	0	Activated by TPU channel 4 compare match/input capture A interrupt	
			1	Activated by TPU channel 5 compare match/input capture A interrupt	
		1	0	—	
			1	—	

DMABCRH — DMA Band Control Register H'FF06 DMAC
DMABCRL — DMA Band Control Register H'FF07 DMAC

Full address mode

Bit :	15	14	13	12	11	10	9	8
DMABCRH :	FAE1	FAE0	—	—	DTA1	—	DTA0	—
Initial value :	0	0	0	0	0	0	0	0
Read/Write :	R/W	R/W	R/W	R/W	R/W	R/W	R/W	R/W

Reserved
Only 0 should be written to this bit.

Reserved
Only 0 should be written to this bit.

Reserved
Only 0 should be written to this bit.

Channel 0 Data Transfer Acknowledge

0	Clearing of selected internal interrupt source at time of DMA transfer is disabled
1	Clearing of selected internal interrupt source at time of DMA transfer is enabled

Channel 1 Data Transfer Acknowledge

0	Clearing of selected internal interrupt source at time of DMA transfer is disabled
1	Clearing of selected internal interrupt source at time of DMA transfer is enabled

Channel 0 Full Address Enable

0	Short address mode
1	Full address mode

Channel 1 Full Address Enable

0	Short address mode
1	Full address mode

(Continued on next page)

Full address mode (cont)

Bit :	7	6	5	4	3	2	1	0
DMABCRL :	DTME1	DTE1	DTME0	DTE0	DTIE1B	DTIE1A	DTIE0B	DTIE0A
Initial value :	0	0	0	0	0	0	0	0
Read/Write :	R/W	R/W	R/W	R/W	R/W	R/W	R/W	R/W

Channel 0 Data Transfer Interrupt Enable A

0	Transfer end interrupt disabled
1	Transfer end interrupt enabled

Channel 0 Data Transfer Interrupt Enable B

0	Transfer suspended interrupt disabled
1	Transfer suspended interrupt enabled

Channel 1 Data Transfer Interrupt Enable A

0	Transfer end interrupt disabled
1	Transfer end interrupt enabled

Channel 1 Data Transfer Interrupt Enable B

0	Transfer suspended interrupt disabled
1	Transfer suspended interrupt enabled

Channel 0 Data Transfer Enable

0	Data transfer disabled
1	Data transfer enabled

Channel 0 Data Transfer Master Enable

0	Data transfer disabled. In burst mode, cleared to 0 by an NMI interrupt
1	Data transfer enabled

Channel 1 Data Transfer Enable

0	Data transfer disabled
1	Data transfer enabled

Channel 1 Data Transfer Master Enable

0	Data transfer disabled. In burst mode, cleared to 0 by an NMI interrupt
1	Data transfer enabled

(Continued on next page)

Short address mode

Bit :	15	14	13	12	11	10	9	8
DMABCRH :	FAE1	FAE0	SAE1	SAE0	DTA1B	DTA1A	DTA0B	DTA0A
Initial value :	0	0	0	0	0	0	0	0
Read/Write :	R/W	R/W	R/W	R/W	R/W	R/W	R/W	R/W

Channel 0A Data Transfer Acknowledge

0	Clearing of selected internal interrupt source at time of DMA transfer is disabled
1	Clearing of selected internal interrupt source at time of DMA transfer is enabled

Channel 0B Data Transfer Acknowledge

0	Clearing of selected internal interrupt source at time of DMA transfer is disabled
1	Clearing of selected internal interrupt source at time of DMA transfer is enabled

Channel 1A Data Transfer Acknowledge

0	Clearing of selected internal interrupt source at time of DMA transfer is disabled
1	Clearing of selected internal interrupt source at time of DMA transfer is enabled

Channel 1B Data Transfer Acknowledge

0	Clearing of selected internal interrupt source at time of DMA transfer is disabled
1	Clearing of selected internal interrupt source at time of DMA transfer is enabled

Channel 0B Single Address Enable

0	Transfer in dual address mode
1	Transfer in single address mode

Channel 1B Single Address Enable

0	Transfer in dual address mode
1	Transfer in single address mode

Channel 0 Full Address Enable

0	Short address mode
1	Full address mode

Channel 1 Full Address Enable

0	Short address mode
1	Full address mode

(Continued on next page)

Short address mode (cont)

Bit :	7	6	5	4	3	2	1	0
DMABCRL :	DTE1B	DTE1A	DTE0B	DTE0A	DTIE1B	DTIE1A	DTIE0B	DTIE0A
Initial value :	0	0	0	0	0	0	0	0
Read/Write :	R/W	R/W	R/W	R/W	R/W	R/W	R/W	R/W

Channel 0A Data Transfer Interrupt Enable

0	Transfer end interrupt disabled
1	Transfer end interrupt enabled

Channel 0B Data Transfer Interrupt Enable

0	Transfer end interrupt disabled
1	Transfer end interrupt enabled

Channel 1A Data Transfer Interrupt Enable

0	Transfer end interrupt disabled
1	Transfer end interrupt enabled

Channel 1B Data Transfer Interrupt Enable

0	Transfer end interrupt disabled
1	Transfer end interrupt enabled

Channel 0A Data Transfer Enable

0	Data transfer disabled
1	Data transfer enabled

Channel 0B Data Transfer Enable

0	Data transfer disabled
1	Data transfer enabled

Channel 1A Data Transfer Enable

0	Data transfer disabled
1	Data transfer enabled

Channel 1B Data Transfer Enable

0	Data transfer disabled
1	Data transfer enabled

ISCRH — IRQ Sense Control Register H **H'FF2C** **Interrupt Controller**
ISCRL — IRQ Sense Control Register L **H'FF2D** **Interrupt Controller**

ISCRH

Bit :	15	14	13	12	11	10	9	8
	IRQ7SCB	IRQ7SCA	IRQ6SCB	IRQ6SCA	IRQ5SCB	IRQ5SCA	IRQ4SCB	IRQ4SCA
Initial value :	0	0	0	0	0	0	0	0
Read/Write :	R/W	R/W	R/W	R/W	R/W	R/W	R/W	R/W

IRQ7 to IRQ4 Sense Control

ISCRL

Bit :	7	6	5	4	3	2	1	0
	IRQ3SCB	IRQ3SCA	IRQ2SCB	IRQ2SCA	IRQ1SCB	IRQ1SCA	IRQ0SCB	IRQ0SCA
Initial value :	0	0	0	0	0	0	0	0
Read/Write :	R/W	R/W	R/W	R/W	R/W	R/W	R/W	R/W

IRQ3 to IRQ0 Sense Control

IRQnSCB	IRQnSCA	Interrupt Request Generation
0	0	$\overline{\text{IRQn}}$ input low level
	1	Falling edge of $\overline{\text{IRQn}}$ input
1	0	Rising edge of $\overline{\text{IRQn}}$ input
	1	Both falling and rising edges of $\overline{\text{IRQn}}$ input

(n = 7 to 0)

IER—IRQ Enable Register **H'FF2E** **Interrupt Controller**

Bit :	7	6	5	4	3	2	1	0
	IRQ7E	IRQ6E	IRQ5E	IRQ4E	IRQ3E	IRQ2E	IRQ1E	IRQ0E
Initial value :	0	0	0	0	0	0	0	0
Read/Write :	R/W	R/W	R/W	R/W	R/W	R/W	R/W	R/W

IRQn Enable

0	IRQn interrupt disabled
1	IRQn interrupt enabled

(n = 7 to 0)

ISR—IRQ Status Register **H'FF2F** **Interrupt Controller**

Bit :	7	6	5	4	3	2	1	0
	IRQ7F	IRQ6F	IRQ5F	IRQ4F	IRQ3F	IRQ2F	IRQ1F	IRQ0F
Initial value :	0	0	0	0	0	0	0	0
Read/Write :	R/(W)*	R/(W)*	R/(W)*	R/(W)*	R/(W)*	R/(W)*	R/(W)*	R/(W)*

Indicate the status of IRQ7 to IRQ0 interrupt requests

Note: * Can only be written with 0 for flag clearing.

DTCERA to DTCERF—DTC Enable Registers **H'FF30 to H'FF35** **DTC**

Bit :	7	6	5	4	3	2	1	0
	DTCE7	DTCE6	DTCE5	DTCE4	DTCE3	DTCE2	DTCE1	DTCE0
Initial value :	0	0	0	0	0	0	0	0
Read/Write :	R/W	R/W	R/W	R/W	R/W	R/W	R/W	R/W

DTC Activation Enable

0	DTC activation by this interrupt is disabled [Clearing conditions] • When the DISEL bit is 1 and data transfer has ended • When the specified number of transfers have ended
1	DTC activation by this interrupt is enabled [Holding condition] When the DISEL bit is 0 and the specified number of transfers have not ended

Correspondence between Interrupt Sources and DTCER

	Bits							
Register	**7**	**6**	**5**	**4**	**3**	**2**	**1**	**0**
DTCERA	IRQ0	IRQ1	IRQ2	IRQ3	IRQ4	IRQ5	IRQ6	IRQ7
DTCERB	—	ADI	TGI0A	TGI0B	TGI0C	TGI0D	TGI1A	TGI1B
DTCERC	TGI2A	TGI2B	TGI3A	TGI3B	TGI3C	TGI3D	TGI4A	TGI4B
DTCERD	—	—	TGI5A	TGI5B	CMIA0	CMIB0	CMIA1	CMIB1
DTCERE	DMTEND0A	DMTEND0B	DMTEND1A	DMTEND1B	RXI0	TXI0	RXI1	TXI1
DTCERF	RXI2	TXI2	—	—	—	—	—	—

DTVECR—DTC Vector Register **H'FF37** **DTC**

Bit :	7	6	5	4	3	2	1	0
	SWDTE	DTVEC6	DTVEC5	DTVEC4	DTVEC3	DTVEC2	DTVEC1	DTVEC0
Initial value :	0	0	0	0	0	0	0	0
Read/Write :	R/(W)*	R/W	R/W	R/W	R/W	R/W	R/W	R/W

Sets vector number for DTC software activation

DTC Software Activation Enable

0	DTC software activation is disabled [Clearing condition] When the DISEL bit is 0 and the specified number of transfers have not ended
1	DTC software activation is enabled [Holding conditions] • When the DISEL bit is 1 and data transfer has ended • When the specified number of transfers have ended • During data transfer due to software activation

Note: * A value of 1 can always be written to the SWDTE bit, but 0 can only be written after 1 is read.

SBYCR—Standby Control Register **H'FF38** **Power-Down State**

Bit :	7	6	5	4	3	2	1	0
	SSBY	STS2	STS1	STS0	OPE	—	—	—
Initial value :	0	0	0	0	1	0	0	0
Read/Write :	R/W	R/W	R/W	R/W	R/W	—	—	R/W

Reserved
Only 0 should be written to this bit

Output Port Enable

0	In software standby mode, address bus and bus control signals are high-impedance
1	In software standby mode, address bus and bus control signals retain output state

Standby Timer Select

0	0	0	Standby time = 8,192 states
		1	Standby time = 16,384 states
	1	0	Standby time = 32,768 states
		1	Standby time = 65,536 states
1	0	0	Standby time = 131,072 states
		1	Standby time = 262,144 states
	1	0	Reserved
		1	Standby time = 16 states*

Note: * Not available in the F-ZTAT version.

Software Standby

0	Transition to sleep mode after execution of SLEEP instruction
1	Transition to software standby mode after execution of SLEEP instruction

SYSCR—System Control Register **H'FF39** **MCU**

Bit :	7	6	5	4	3	2	1	0
	—	—	INTM1	INTM0	NMIEG	—	—	RAME
Initial value :	0	0	0	0	0	0	0	1
Read/Write :	R/W	—	R/W	R/W	R/W	—/(R/W)	R/W	R/W

RAM Enable

0	On-chip RAM disabled
1	On-chip RAM enabled

Reserved
Only 0 should be written to this bit

Reserved for H8S/2398, H8S/2394, H8S/2392, and H8S/2390.
Only 0 should be written to this bit.

NMI Input Edge Select

0	Falling edge
1	Rising edge

Interrupt Control Mode Selection

0	0	Interrupt control mode 0
	1	Setting prohibited
1	0	Interrupt control mode 2
	1	Setting prohibited

Reserved
Only 0 should be written to this bit

SCKCR—System Clock Control Register H'FF3A Clock Pulse Generator

Bit :	7	6	5	4	3	2	1	0
	PSTOP	—	—	—	—	SCK2	SCK1	SCK0
Initial value :	0	0	0	0	0	0	0	0
Read/Write :	R/W	R/W	—/(R/W)	—	—	R/W	R/W	R/W

Reserved for H8S/2398, H8S/2394, H8S/2392, and H8S/2390. Only 0 should be written to this bit.

Reserved
Only 0 should be written to this bit.

Bus Master Clock Select

0	0	0	Bus master is in high-speed mode
		1	Medium-speed clock is ø/2
	1	0	Medium-speed clock is ø/4
		1	Medium-speed clock is ø/8
1	0	0	Medium-speed clock is ø/16
		1	Medium-speed clock is ø/32
	1	—	—

ø Clock Output Control

PSTOP	Normal Operation	Sleep Mode	Software Standby Mode	Hardware Standby Mode
0	ø output	ø output	Fixed high	High impedance
1	Fixed high	Fixed high	Fixed high	High impedance

MDCR—Mode Control Register H'FF3B MCU

Bit :	7	6	5	4	3	2	1	0
	—	—	—	—	—	MDS2	MDS1	MDS0
Initial value :	1	0	0	0	0	—*	—*	—*
Read/Write :	—	—	—	—	—	R	R	R

Current mode pin operating mode

Note: * Determined by pins MD_2 to MD_0

MSTPCRH — Module Stop Control Register H H'FF3C Power-Down State
MSTPCRL — Module Stop Control Register L H'FF3D Power-Down State

	MSTPCRH								MSTPCRL							
Bit :	15	14	13	12	11	10	9	8	7	6	5	4	3	2	1	0
Initial value :	0	0	1	1	1	1	1	1	1	1	1	1	1	1	1	1
Read/Write :	R/W	R/W	R/W	R/W	R/W	R/W	R/W	R/W	R/W	R/W	R/W	R/W	R/W	R/W	R/W	R/W

Specifies module stop mode

0	Module stop mode cleared
1	Module stop mode set

SYSCR2—System Control Register 2 **H'FF42** **MCU**

[F-ZTAT version Only]

Bit :	7	6	5	4	3	2	1	0
	—	—	—	—	FLSHE	—	—	—
Initial value :	0	0	0	0	0	0	0	0
Read/Write :	—	—	—	—	R/W	—	—	—

Flash memory control register enable

0	Flash memory control register is not selected
1	Flash memory control register is selected

Note: SYSCR2 can only be accessed in the F-ZTAT version. In other versions, this register cannot be written to and will return an undefined value if read.

Reserved Register **H'FF44**

Bit :	7	6	5	4	3	2	1	0
	—	—	—	—	—	—	—	—
Initial value :	0	0	0	0	0	0	0	0
Read/Write :	—	—	R/W	—	—	—	—	—

Reserved
Only 0 should be written to these bits

Reserved Register **H'FF45**

Bit :	7	6	5	4	3	2	1	0
	—	—	—	—	—	—	—	—
Initial value :	0	0	0	0	1	1	1	1
Read/Write :	R/W	R/W	R/W	R/W	R/W	R/W	R/W	R/W

Reserved
Only 0 should be written to these bits

Reserved
Only 1 should be written to these bits

PCR—PPG Output Control Register **H'FF46** **PPG**

Bit :	7	6	5	4	3	2	1	0
	G3CMS1	G3CMS0	G2CMS1	G2CMS0	G1CMS1	G1CMS0	G0CMS1	G0CMS0
Initial value :	1	1	1	1	1	1	1	1
Read/Write :	R/W	R/W	R/W	R/W	R/W	R/W	R/W	R/W

Output Trigger for Pulse Output Group 0

0	0	Compare match in TPU channel 0
	1	Compare match in TPU channel 1
1	0	Compare match in TPU channel 2
	1	Compare match in TPU channel 3

Output Trigger for Pulse Output Group 1

0	0	Compare match in TPU channel 0
	1	Compare match in TPU channel 1
1	0	Compare match in TPU channel 2
	1	Compare match in TPU channel 3

Output Trigger for Pulse Output Group 2

0	0	Compare match in TPU channel 0
	1	Compare match in TPU channel 1
1	0	Compare match in TPU channel 2
	1	Compare match in TPU channel 3

Output Trigger for Pulse Output Group 3

0	0	Compare match in TPU channel 0
	1	Compare match in TPU channel 1
1	0	Compare match in TPU channel 2
	1	Compare match in TPU channel 3

PMR—PPG Output Mode Register **H'FF47** **PPG**

Bit :	7	6	5	4	3	2	1	0
	G3INV	G2INV	G1INV	G0INV	G3NOV	G2NOV	G1NOV	G0NOV
Initial value :	1	1	1	1	0	0	0	0
Read/Write :	R/W	R/W	R/W	R/W	R/W	R/W	R/W	R/W

Pulse Output Group n Normal/Non-Overlap Operation Select

0	Normal operation in pulse output group n (output values updated at compare match A in the selected TPU channel)
1	Non-overlapping operation in pulse output group n (independent 1 and 0 output at compare match A or B in the selected TPU channel)

n=3 to 0

Pulse Output Group n Direct/Inverted Output

0	Inverted output for pulse output group n (low-level output at pin for a 1 in PODRH)
1	Direct output for pulse output group n (high-level output at pin for a 1 in PODRH)

n=3 to 0

NDERH — Next Data Enable Registers H **H'FF48** **PPG**
NDERL — Next Data Enable Registers L **H'FF49** **PPG**

NDERH

Bit :	7	6	5	4	3	2	1	0
	NDER15	NDER14	NDER13	NDER12	NDER11	NDER10	NDER9	NDER8
Initial value :	0	0	0	0	0	0	0	0
Read/Write :	R/W	R/W	R/W	R/W	R/W	R/W	R/W	R/W

Pulse Output Enable/Disable

0	Pulse outputs PO15 to PO8 are disabled
1	Pulse outputs PO15 to PO8 are enabled

NDERL

Bit :	7	6	5	4	3	2	1	0
	NDER7	NDER6	NDER5	NDER4	NDER3	NDER2	NDER1	NDER0
Initial value :	0	0	0	0	0	0	0	0
Read/Write :	R/W	R/W	R/W	R/W	R/W	R/W	R/W	R/W

Pulse Output Enable/Disable

0	Pulse outputs PO7 to PO0 are disabled
1	Pulse outputs PO7 to PO0 are enabled

PODRH — Output Data Register H **H'FF4A** **PPG**
PODRL — Output Data Register L **H'FF4B** **PPG**

PODRH

Bit :	7	6	5	4	3	2	1	0
	POD15	POD14	POD13	POD12	POD11	POD10	POD9	POD8
Initial value :	0	0	0	0	0	0	0	0
Read/Write :	R/(W)*	R/(W)*	R/(W)*	R/(W)*	R/(W)*	R/(W)*	R/(W)*	R/(W)*

Stores output data for use in pulse output

PODRL

Bit :	7	6	5	4	3	2	1	0
	POD7	POD6	POD5	POD4	POD3	POD2	POD1	POD0
Initial value :	0	0	0	0	0	0	0	0
Read/Write :	R/(W)*	R/(W)*	R/(W)*	R/(W)*	R/(W)*	R/(W)*	R/(W)*	R/(W)*

Stores output data for use in pulse output

Note: * A bit that has been set for pulse output by NDER is read-only.

(1) When pulse output group output triggers are the same

(a) Address: H'FF4C

Bit :	7	6	5	4	3	2	1	0
	NDR15	NDR14	NDR13	NDR12	NDR11	NDR10	NDR9	NDR8
Initial value :	0	0	0	0	0	0	0	0
Read/Write :	R/W	R/W	R/W	R/W	R/W	R/W	R/W	R/W

Stores the next data for pulse output groups 3 and 2

(b) Address: H'FF4E

Bit :	7	6	5	4	3	2	1	0
	—	—	—	—	—	—	—	—
Initial value :	1	1	1	1	1	1	1	1
Read/Write :	—	—	—	—	—	—	—	—

(2) When pulse output group output triggers are different

(a) Address: H'FF4C

Bit :	7	6	5	4	3	2	1	0
	NDR15	NDR14	NDR13	NDR12	—	—	—	—
Initial value :	0	0	0	0	1	1	1	1
Read/Write :	R/W	R/W	R/W	R/W	—	—	—	—

Stores the next data for pulse output group 3

(b) Address: H'FF4E

Bit :	7	6	5	4	3	2	1	0
	—	—	—	—	NDR11	NDR10	NDR9	NDR8
Initial value :	1	1	1	1	0	0	0	0
Read/Write :	—	—	—	—	R/W	R/W	R/W	R/W

Stores the next data for pulse output group 2

(1) When pulse output group output triggers are the same

(a) Address: H'FF4D

Bit :	7	6	5	4	3	2	1	0
	NDR7	NDR6	NDR5	NDR4	NDR3	NDR2	NDR1	NDR0
Initial value :	0	0	0	0	0	0	0	0
Read/Write :	R/W	R/W	R/W	R/W	R/W	R/W	R/W	R/W

Stores the next data for pulse output groups 1 and 0

(b) Address: H'FF4F

Bit :	7	6	5	4	3	2	1	0
	—	—	—	—	—	—	—	—
Initial value :	1	1	1	1	1	1	1	1
Read/Write :	—	—	—	—	—	—	—	—

(2) When pulse output group output triggers are different

(a) Address: H'FF4D

Bit :	7	6	5	4	3	2	1	0
	NDR7	NDR6	NDR5	NDR4	—	—	—	—
Initial value :	0	0	0	0	1	1	1	1
Read/Write :	R/W	R/W	R/W	R/W	—	—	—	—

Stores the next data for pulse output group 1

(b) Address: H'FF4F

Bit :	7	6	5	4	3	2	1	0
	—	—	—	—	NDR3	NDR2	NDR1	NDR0
Initial value :	1	1	1	1	0	0	0	0
Read/Write :	—	—	—	—	R/W	R/W	R/W	R/W

Stores the next data for pulse output group 0

PORT1—Port 1 Register **H'FF50** **Port 1**

Bit :	7	6	5	4	3	2	1	0
	P17	P16	P15	P14	P13	P12	P11	P10
Initial value :	—*	—*	—*	—*	—*	—*	—*	—*
Read/Write :	R	R	R	R	R	R	R	R

State of port 1 pins

Note: * Determined by the state of pins $P1_7$ to $P1_0$.

PORT2—Port 2 Register **H'FF51** **Port 2**

Bit :	7	6	5	4	3	2	1	0
	P27	P26	P25	P24	P23	P22	P21	P20
Initial value :	—*	—*	—*	—*	—*	—*	—*	—*
Read/Write :	R	R	R	R	R	R	R	R

State of port 2 pins

Note: * Determined by the state of pins $P2_7$ to $P2_0$.

PORT3—Port 3 Register **H'FF52** **Port 3**

Bit :	7	6	5	4	3	2	1	0
	—	—	P35	P34	P33	P32	P31	P30
Initial value :	Undefined	Undefined	—*	—*	—*	—*	—*	—*
Read/Write :	—	—	R	R	R	R	R	R

State of port 3 pins

Note: * Determined by the state of pins $P3_5$ to $P3_0$.

PORT4—Port 4 Register **H'FF53** **Port 4**

Bit :	7	6	5	4	3	2	1	0
	P47	P46	P45	P44	P43	P42	P41	P40
Initial value :	—*	—*	—*	—*	—*	—*	—*	—*
Read/Write :	R	R	R	R	R	R	R	R

State of port 4 pins

Note: * Determined by the state of pins $P4_7$ to $P4_0$.

PORT5—Port 5 Register **H'FF54** **Port 5**

Bit :	7	6	5	4	3	2	1	0
	—	—	—	—	P53	P52	P51	P50
Initial value :	Undefined	Undefined	Undefined	Undefined	—*	—*	—*	—*
Read/Write :	—	—	—	—	R	R	R	R

State of port 5 pins

Note: * Determined by the state of pins $P5_3$ to $P5_0$.

PORT6—Port 6 Register **H'FF55** **Port 6**

Bit :	7	6	5	4	3	2	1	0
	P67	P66	P65	P64	P63	P62	P61	P60
Initial value :	—*	—*	—*	—*	—*	—*	—*	—*
Read/Write :	R	R	R	R	R	R	R	R

State of port 6 pins

Note: * Determined by the state of pins $P6_7$ to $P6_0$.

PORTA—Port A Register **H'FF59** **Port A**

Bit :	7	6	5	4	3	2	1	0
	PA7	PA6	PA5	PA4	PA3	PA2	PA1	PA0
Initial value :	—*	—*	—*	—*	—*	—*	—*	—*
Read/Write :	R	R	R	R	R	R	R	R

State of port A pins

Note: * Determined by the state of pins PA_7 to PA_0.

PORTB—Port B Register **H'FF5A** **Port B**
[On-chip ROM version Only]

Bit :	7	6	5	4	3	2	1	0
	PB7	PB6	PB5	PB4	PB3	PB2	PB1	PB0
Initial value :	—*	—*	—*	—*	—*	—*	—*	—*
Read/Write :	R	R	R	R	R	R	R	R

State of port B pins

Note: * Determined by the state of pins PB_7 to PB_0.

PORTC—Port C Register **H'FF5B** **Port C**
[On-chip ROM version Only)]

Bit :	7	6	5	4	3	2	1	0
	PC7	PC6	PC5	PC4	PC3	PC2	PC1	PC0
Initial value :	—*	—*	—*	—*	—*	—*	—*	—*
Read/Write :	R	R	R	R	R	R	R	R

State of port C pins

Note: * Determined by the state of pins PC_7 to PC_0.

PORTD—Port D Register **H'FF5C** **Port D**
[On-chip ROM version Only]

Bit :	7	6	5	4	3	2	1	0
	PD7	PD6	PD5	PD4	PD3	PD2	PD1	PD0
Initial value :	—*	—*	—*	—*	—*	—*	—*	—*
Read/Write :	R	R	R	R	R	R	R	R

State of port D pins

Note: * Determined by the state of pins PD_7 to PD_0.

PORTE—Port E Register **H'FF5D** **Port E**

Bit :	7	6	5	4	3	2	1	0
	PE7	PE6	PE5	PE4	PE3	PE2	PE1	PE0
Initial value :	—*	—*	—*	—*	—*	—*	—*	—*
Read/Write :	R	R	R	R	R	R	R	R

State of port E pins

Note: * Determined by the state of pins PE_7 to PE_0.

PORTF—Port F Register **H'FF5E** **Port F**

Bit :	7	6	5	4	3	2	1	0
	PF7	PF6	PF5	PF4	PF3	PF2	PF1	PF0
Initial value :	—*	—*	—*	—*	—*	—*	—*	—*
Read/Write :	R	R	R	R	R	R	R	R

State of port F pins

Note: * Determined by the state of pins PF_7 to PF_0.

PORTG—Port G Register **H'FF5F** **Port G**

Bit :	7	6	5	4	3	2	1	0
	—	—	—	PG4	PG3	PG2	PG1	PG0
Initial value :	Undefined	Undefined	Undefined	—*	—*	—*	—*	—*
Read/Write :	—	—	—	R	R	R	R	R

State of port G pins

Note: * Determined by the state of pins PG_4 to PG_0.

P1DR—Port 1 Data Register **H'FF60** **Port 1**

Bit :	7	6	5	4	3	2	1	0
	P17DR	P16DR	P15DR	P14DR	P13DR	P12DR	P11DR	P10DR
Initial value :	0	0	0	0	0	0	0	0
Read/Write :	R/W	R/W	R/W	R/W	R/W	R/W	R/W	R/W

Stores output data for port 1 pins ($P1_7$ to $P1_0$)

P2DR—Port 2 Data Register **H'FF61** **Port 2**

Bit :	7	6	5	4	3	2	1	0
	P27DR	P26DR	P25DR	P24DR	P23DR	P22DR	P21DR	P20DR
Initial value :	0	0	0	0	0	0	0	0
Read/Write :	R/W	R/W	R/W	R/W	R/W	R/W	R/W	R/W

Stores output data for port 2 pins ($P2_7$ to $P2_0$)

P3DR—Port 3 Data Register **H'FF62** **Port 3**

Bit :	7	6	5	4	3	2	1	0
	—	—	P35DR	P34DR	P33DR	P32DR	P31DR	P30DR
Initial value :	Undefined	Undefined	0	0	0	0	0	0
Read/Write :	—	—	R/W	R/W	R/W	R/W	R/W	R/W

Stores output data for port 3 pins ($P3_5$ to $P3_0$)

P5DR—Port 5 Data Register **H'FF64** **Port 5**

Bit :	7	6	5	4	3	2	1	0
	—	—	—	—	P53DR	P52DR	P51DR	P50DR
Initial value :	Undefined	Undefined	Undefined	Undefined	0	0	0	0
Read/Write :	—	—	—	—	R/W	R/W	R/W	R/W

Stores output data for port 5 pins ($P5_3$ to $P5_0$)

P6DR—Port 6 Data Register **H'FF65** **Port 6**

Bit :	7	6	5	4	3	2	1	0
	P67DR	P66DR	P65DR	P64DR	P63DR	P62DR	P61DR	P60DR
Initial value :	0	0	0	0	0	0	0	0
Read/Write :	R/W	R/W	R/W	R/W	R/W	R/W	R/W	R/W

Stores output data for port 6 pins ($P6_7$ to $P6_0$)

PADR—Port A Data Register **H'FF69** **Port A**

Bit :	7	6	5	4	3	2	1	0
	PA7DR	PA6DR	PA5DR	PA4DR	PA3DR	PA2DR	PA1DR	PA0DR
Initial value :	0	0	0	0	0	0	0	0
Read/Write :	R/W	R/W	R/W	R/W	R/W	R/W	R/W	R/W

Stores output data for port A pins (PA_7 to PA_0)

PBDR—Port B Data Register **H'FF6A** **Port B**

Bit :	7	6	5	4	3	2	1	0
	PB7DR	PB6DR	PB5DR	PB4DR	PB3DR	PB2DR	PB1DR	PB0DR
Initial value :	0	0	0	0	0	0	0	0
Read/Write :	R/W	R/W	R/W	R/W	R/W	R/W	R/W	R/W

Stores output data for port B pins (PB_7 to PB_0)

PCDR—Port C Data Register **H'FF6B** **Port C**

Bit :	7	6	5	4	3	2	1	0
	PC7DR	PC6DR	PC5DR	PC4DR	PC3DR	PC2DR	PC1DR	PC0DR
Initial value :	0	0	0	0	0	0	0	0
Read/Write :	R/W	R/W	R/W	R/W	R/W	R/W	R/W	R/W

Stores output data for port C pins (PC_7 to PC_0)

PDDR—Port D Data Register **H'FF6C** **Port D**

Bit :	7	6	5	4	3	2	1	0
	PD7DR	PD6DR	PD5DR	PD4DR	PD3DR	PD2DR	PD1DR	PD0DR
Initial value :	0	0	0	0	0	0	0	0
Read/Write :	R/W	R/W	R/W	R/W	R/W	R/W	R/W	R/W

Stores output data for port D pins (PD_7 to PD_0)

PEDR—Port E Data Register **H'FF6D** **Port E**

Bit :	7	6	5	4	3	2	1	0
	PE7DR	PE6DR	PE5DR	PE4DR	PE3DR	PE2DR	PE1DR	PE0DR
Initial value :	0	0	0	0	0	0	0	0
Read/Write :	R/W	R/W	R/W	R/W	R/W	R/W	R/W	R/W

Stores output data for port E pins (PE_7 to PE_0)

PFDR—Port F Data Register **H'FF6E** **Port F**

Bit :	7	6	5	4	3	2	1	0
	PF7DR	PF6DR	PF5DR	PF4DR	PF3DR	PF2DR	PF1DR	PF0DR
Initial value :	0	0	0	0	0	0	0	0
Read/Write :	R/W	R/W	R/W	R/W	R/W	R/W	R/W	R/W

Stores output data for port F pins (PF_7 to PF_0)

PGDR—Port G Data Register **H'FF6F** **Port G**

Bit :	7	6	5	4	3	2	1	0
	—	—	—	PG4DR	PG3DR	PG2DR	PG1DR	PG0DR
Initial value :	Undefined	Undefined	Undefined	0	0	0	0	0
Read/Write :	—	—	—	R/W	R/W	R/W	R/W	R/W

Stores output data for port G pins (PG_4 to PG_0)

PAPCR—Port A MOS Pull-Up Control Register **H'FF70** **Port A**
[On-chip ROM version Only]

Bit :	7	6	5	4	3	2	1	0
	PA7PCR	PA6PCR	PA5PCR	PA4PCR	PA3PCR	PA2PCR	PA1PCR	PA0PCR
Initial value :	0	0	0	0	0	0	0	0
Read/Write :	R/W	R/W	R/W	R/W	R/W	R/W	R/W	R/W

Controls the MOS input pull-up function incorporated into port A on a bit-by-bit basis

Note: Setting is prohibited in the H8S/2352, H8S/2394, H8S/2392, and H8S/2390.

PBPCR—Port B MOS Pull-Up Control Register **H'FF71** **Port B**
[On-chip ROM version Only]

Bit :	7	6	5	4	3	2	1	0
	PB7PCR	PB6PCR	PB5PCR	PB4PCR	PB3PCR	PB2PCR	PB1PCR	PB0PCR
Initial value :	0	0	0	0	0	0	0	0
Read/Write :	R/W	R/W	R/W	R/W	R/W	R/W	R/W	R/W

Controls the MOS input pull-up function incorporated into port B on a bit-by-bit basis

Note: Setting is prohibited in the H8S/2352, H8S/2394, H8S/2392, and H8S/2390.

PCPCR—Port C MOS Pull-Up Control Register **H'FF72** **Port C**
[On-chip ROM version Only]

Bit :	7	6	5	4	3	2	1	0
	PC7PCR	PC6PCR	PC5PCR	PC4PCR	PC3PCR	PC2PCR	PC1PCR	PC0PCR
Initial value :	0	0	0	0	0	0	0	0
Read/Write :	R/W	R/W	R/W	R/W	R/W	R/W	R/W	R/W

Controls the MOS input pull-up function incorporated into port C on a bit-by-bit basis

Note: Setting is prohibited in the H8S/2352, H8S/2394, H8S/2392, and H8S/2390.

PDPCR—Port D MOS Pull-Up Control Register H'FF73 Port D
[On-chip ROM version Only]

Bit :	7	6	5	4	3	2	1	0
	PD7PCR	PD6PCR	PD5PCR	PD4PCR	PD3PCR	PD2PCR	PD1PCR	PD0PCR
Initial value :	0	0	0	0	0	0	0	0
Read/Write :	R/W	R/W	R/W	R/W	R/W	R/W	R/W	R/W

Controls the MOS input pull-up function incorporated into port D on a bit-by-bit basis

Note: Setting is prohibited in the H8S/2352, H8S/2394, H8S/2392, and H8S/2390.

PEPCR—Port E MOS Pull-Up Control Register H'FF74 Port E
[On-chip ROM version Only]

Bit :	7	6	5	4	3	2	1	0
	PE7PCR	PE6PCR	PE5PCR	PE4PCR	PE3PCR	PE2PCR	PE1PCR	PE0PCR
Initial value :	0	0	0	0	0	0	0	0
Read/Write :	R/W	R/W	R/W	R/W	R/W	R/W	R/W	R/W

Controls the MOS input pull-up function incorporated into port E on a bit-by-bit basis

Note: Setting is prohibited in the H8S/2352, H8S/2394, H8S/2392, and H8S/2390.

P3ODR—Port 3 Open Drain Control Register H'FF76 Port 3

Bit :	7	6	5	4	3	2	1	0
	—	—	P35ODR	P34ODR	P33ODR	P32ODR	P31ODR	P30ODR
Initial value :	Undefined	Undefined	0	0	0	0	0	0
Read/Write :	—	—	R/W	R/W	R/W	R/W	R/W	R/W

Controls the PMOS on/off status for each port 3 pin ($P3_5$ to $P3_0$)

PAODR—Port A Open Drain Control Register H'FF77 Port A
[On-chip ROM version Only]

Bit :	7	6	5	4	3	2	1	0
	PA7ODR	PA6ODR	PA5ODR	PA4ODR	PA3ODR	PA2ODR	PA1ODR	PA0ODR
Initial value :	0	0	0	0	0	0	0	0
Read/Write :	R/W	R/W	R/W	R/W	R/W	R/W	R/W	R/W

Controls the PMOS on/off status for each port A pin (PA_7 to PA_0)

Note: Setting is prohibited in the H8S/2352, H8S/2394, H8S/2392, and H8S/2390.

SMR0—Serial Mode Register 0 **H'FF78** **SCI0**

Bit :	7	6	5	4	3	2	1	0
	C/$\overline{A}$	CHR	PE	O/$\overline{E}$	STOP	MP	CKS1	CKS0
Initial value :	0	0	0	0	0	0	0	0
Read/Write :	R/W	R/W	R/W	R/W	R/W	R/W	R/W	R/W

Clock Select

0	0	ø clock
	1	ø/4 clock
1	0	ø/16 clock
	1	ø/64 clock

Multiprocessor Mode

0	Multiprocessor function disabled
1	Multiprocessor format selected

Stop Bit Length

0	1 stop bit
1	2 stop bits

Parity Mode

0	Even parity
1	Odd parity

Parity Enable

0	Parity bit addition and checking disabled
1	Parity bit addition and checking enabled

Character Length

0	8-bit data
1	7-bit data*

Note: * When 7-bit data is selected, the MSB (bit 7) of TDR is not transmitted.

Asynchronous Mode/Synchronous Mode Select

0	Asynchronous mode
1	Synchronous mode

SMR0—Serial Mode Register 0 **H'FF78** **Smart Card Interface 0**

Bit :	7	6	5	4	3	2	1	0
	GM	CHR	PE	O/$\overline{E}$	STOP	MP	CKS1	CKS0
Initial value :	0	0	0	0	0	0	0	0
Read/Write :	R/W	R/W	R/W	R/W	R/W	R/W	R/W	R/W

Clock Select

0	0	ø clock
	1	ø/4 clock
1	0	ø/16 clock
	1	ø/64 clock

Multiprocessor Mode

0	Multiprocessor function disabled
1	Setting prohibited

Stop Bit Length

0	Setting prohibited
1	2 stop bits

Parity Mode

0	Even parity
1	Odd parity

Parity Enable

0	Setting prohibited
1	Parity bit addition and checking enabled

Character Length

0	8-bit data
1	Setting prohibited

GSM Mode

0	Normal Smart Card interface mode operation • TEND flag generated 12.5 etu after beginning of start bit • Clock output on/off control only
1	GSM mode Smart Card interface mode operation • TEND flag generated 11.0 etu after beginning of start bit • Fixed high/low-level control possible (set in SCR) in addition to clock output on/off control

Note: etu: Elementary time unit (time for transfer of 1 bit)

BRR0—Bit Rate Register 0 **H'FF79** **SCI0, Smart Card Interface 0**

Bit :	7	6	5	4	3	2	1	0
Initial value :	1	1	1	1	1	1	1	1
Read/Write :	R/W	R/W	R/W	R/W	R/W	R/W	R/W	R/W
	Sets the serial transfer bit rate							

Note: See section 14.2.8, Bit Rate Register (BRR), for details.

SCR0—Serial Control Register 0 H'FF7A SCI0

Bit :	7	6	5	4	3	2	1	0
	TIE	RIE	TE	RE	MPIE	TEIE	CKE1	CKE0
Initial value :	0	0	0	0	0	0	0	0
Read/Write :	R/W	R/W	R/W	R/W	R/W	R/W	R/W	R/W

Clock Enable

0	0	Asynchronous mode	Internal clock/SCK pin functions as I/O port
		Synchronous mode	Internal clock/SCK pin functions as serial clock output
	1	Asynchronous mode	Internal clock/SCK pin functions as clock output*1
		Synchronous mode	Internal clock/SCK pin functions as serial clock output
1	0	Asynchronous mode	External clock/SCK pin functions as clock input*2
		Synchronous mode	External clock/SCK pin functions as serial clock input
	1	Asynchronous mode	External clock/SCK pin functions as clock input*2
		Synchronous mode	External clock/SCK pin functions as serial clock input

Notes: 1. Outputs a clock of the same frequency as the bit rate.
2. Inputs a clock with a frequency 16 times the bit rate.

Transmit End Interrupt Enable

0	Transmit end interrupt (TEI) request disabled
1	Transmit end interrupt (TEI) request enabled

Multiprocessor Interrupt Enable

0	Multiprocessor interrupts disabled [Clearing conditions] • When the MPIE bit is cleared to 0 • When MPB= 1 data is received
1	Multiprocessor interrupts enabled Receive data full interrupt (RXI) requests, receive error interrupt (ERI) requests, and setting of the RDRF, FER, and ORER flags in SSR are disabled until data with the multiprocessor bit set to 1 is received

Receive Enable

0	Reception disabled
1	Reception enabled

Transmit Enable

0	Transmission disabled
1	Transmission enabled

Receive Interrupt Enable

0	Receive data full interrupt (RXI) request and receive error interrupt (ERI) request disabled
1	Receive data full interrupt (RXI) request and receive error interrupt (ERI) request enabled

Transmit Interrupt Enable

0	Transmit data empty interrupt (TXI) requests disabled
1	Transmit data empty interrupt (TXI) requests enabled

SCR0—Serial Control Register 0 H'FF7A Smart Card Interface 0

Bit	7	6	5	4	3	2	1	0
	TIE	RIE	TE	RE	MPIE	TEIE	CKE1	CKE0
Initial value	0	0	0	0	0	0	0	0
Read/Write	R/W	R/W	R/W	R/W	R/W	R/W	R/W	R/W

Clock Enable

SCMR	SMR	SCR setting		SCK pin function
SMIF	C/$\overline{A}$,GM	CKE1	CKE0	
0	See SCI specification			
1	0	0	0	Operates as port input pin
1	0	0	1	Clock output as SCK output pin
1	1	0	0	Fixed-low output as SCK output pin
1	1	0	1	Clock output as SCK output pin
1	1	1	0	Fixed-high output as SCK output pin
1	1	1	1	Clock output as SCK output pin

Transmit End Interrupt Enable

0	Transmit end interrupt (TEI) request disabled
1	Transmit end interrupt (TEI) request enabled

Multiprocessor Interrupt Enable

0	Multiprocessor interrupts disabled [Clearing conditions] • When the MPIE bit is cleared to 0 • When MPB= 1 data is received
1	Multiprocessor interrupts enabled Receive data full interrupt (RXI) requests, receive error interrupt (ERI) requests, and setting of the RDRF, FER, and ORER flags in SSR are disabled until data with the multiprocessor bit set to 1 is received

Receive Enable

0	Reception disabled
1	Reception enabled

Transmit Enable

0	Transmission disabled
1	Transmission enabled

Receive Interrupt Enable

0	Receive data full interrupt (RXI) request and receive error interrupt (ERI) request disabled
1	Receive data full interrupt (RXI) request and receive error interrupt (ERI) request enabled

Transmit Interrupt Enable

0	Transmit data empty interrupt (TXI) requests disabled
1	Transmit data empty interrupt (TXI) requests enabled

TDR0—Transmit Data Register 0 H'FF7B SCI0, Smart Card Interface 0

Bit	7	6	5	4	3	2	1	0
Initial value	1	1	1	1	1	1	1	1
Read/Write	R/W	R/W	R/W	R/W	R/W	R/W	R/W	R/W

Stores data for serial transmission

SSR0—Serial Status Register 0 H'FF7C SCI0

Bit :	7	6	5	4	3	2	1	0
	TDRE	RDRF	ORER	FER	PER	TEND	MPB	MPBT
Initial value :	1	0	0	0	0	1	0	0
Read/Write :	R/(W)*	R/(W)*	R/(W)*	R/(W)*	R/(W)*	R	R	R/W

Multiprocessor Bit Transfer

0	Data with a 0 multiprocessor bit is transmitted
1	Data with a 1 multiprocessor bit is transmitted

Multiprocessor Bit

0	[Clearing condition] When data with a 0 multiprocessor bit is received
1	[Setting condition] When data with a 1 multiprocessor bit is received

Transmit End

0	[Clearing conditions] • When 0 is written to TDRE after reading TDRE = 1 • When the DMAC or DTC is activated by a TXI interrupt and write data to TDR
1	[Setting conditions] • When the TE bit in SCR is 0 • When TDRE = 1 at transmission of the last bit of a 1-byte serial transmit character

Parity Error

0	[Clearing condition] When 0 is written to PER after reading PER = 1
1	[Setting condition] When, in reception, the number of 1 bits in the receive data plus the parity bit does not match the parity setting (even or odd) specified by the O/$\overline{E}$ bit in SMR

Framing Error

0	[Clearing condition] When 0 is written to FER after reading FER = 1
1	[Setting condition] When the SCI checks whether the stop bit at the end of the receive data when reception ends, and the stop bit is 0

Overrun Error

0	[Clearing condition] When 0 is written to ORER after reading ORER = 1
1	[Setting condition] When the next serial reception is completed while RDRF = 1

Receive Data Register Full

0	[Clearing conditions] • When 0 is written to RDRF after reading RDRF = 1 • When the DMAC or DTC is activated by an RXI interrupt and read data from RDR
1	[Setting condition] When serial reception ends normally and receive data is transferred from RSR to RDR

Transmit Data Register Empty

0	[Clearing conditions] • When 0 is written to TDRE after reading TDRE = 1 • When the DMAC or DTC is activated by a TXI interrupt and write data to TDR
1	[Setting conditions] • When the TE bit in SCR is 0 • When data is transferred from TDR to TSR and data can be written to TDR

Note: * Can only be written with 0 for flag clearing.

SSR0—Serial Status Register 0 H'FF7C Smart Card Interface 0

Bit	7	6	5	4	3	2	1	0
	TDRE	RDRF	ORER	ERS	PER	TEND	MPB	MPBT
Initial value	1	0	0	0	0	1	0	0
Read/Write	R/(W)*	R/(W)*	R/(W)*	R/(W)*	R/(W)*	R	R	R/W

Multiprocessor Bit Transfer

0	Data with a 0 multiprocessor bit is transmitted
1	Data with a 1 multiprocessor bit is transmitted

Multiprocessor Bit

0	[Clearing condition] When data with a 0 multiprocessor bit is received
1	[Setting condition] When data with a 1 multiprocessor bit is received

Transmit End

0	[Clearing conditions] • When 0 is written to TDRE after reading TDRE = 1 • When the DMAC or DTC is activated by a TXI interrupt and write data to TDR
1	[Setting conditions] • On reset, or in standby mode or module stop mode • When the TE bit in SCR is 0 and the ERS bit is 0 • When TDRE = 1 and ERS = 0 (normal transmission) 2.5 etu after a 1-byte serial character is sent when GM = 0 • When TDRE = 1 and ERS = 0 (normal transmission) 1.0 etu after a 1-byte serial character is sent when GM = 1

Note: etu: Elementary Time Unit (time for transfer of 1 bit)

Parity Error

0	[Clearing condition] When 0 is written to PER after reading PER = 1
1	[Setting condition] When, in reception, the number of 1 bits in the receive data plus the parity bit does not match the parity setting (even or odd) specified by the O/$\overline{E}$ bit in SMR

Error Signal Status

0	[Clearing conditions] • On reset, or in standby mode or module stop mode • When 0 is written to ERS after reading ERS = 1
1	[Setting condition] When the error signal is sampled at the low level

Note: Clearing the TE bit in SCR to 0 does not affect the ERS flag, which retains its prior state.

Overrun Error

0	[Clearing condition] When 0 is written to ORER after reading ORER = 1
1	[Setting condition] When the next serial reception is completed while RDRF = 1

Receive Data Register Full

0	[Clearing conditions] • When 0 is written to RDRF after reading RDRF = 1 • When the DMAC or DTC is activated by an RXI interrupt and read data from RDR
1	[Setting condition] When serial reception ends normally and receive data is transferred from RSR to RDR

Transmit Data Register Empty

0	[Clearing conditions] • When 0 is written to TDRE after reading TDRE = 1 • When the DMAC or DTC is activated by a TXI interrupt and write data to TDR
1	[Setting conditions] • When the TE bit in SCR is 0 • When data is transferred from TDR to TSR and data can be written to TDR

Note: * Can only be written with 0 for flag clearing.

RDR0—Receive Data Register 0 **H'FF7D SCI0, Smart Card Interface 0**

Bit :	7	6	5	4	3	2	1	0
Initial value :	0	0	0	0	0	0	0	0
Read/Write :	R	R	R	R	R	R	R	R

Stores received serial data

SCMR0—Smart Card Mode Register 0 **H'FF7E SCI0, Smart Card Interface 0**

Bit :	7	6	5	4	3	2	1	0
	—	—	—	—	SDIR	SINV	—	SMIF
Initial value :	1	1	1	1	0	0	1	0
Read/Write :	—	—	—	—	R/W	R/W	—	R/W

Smart Card Interface Mode Select

0	Smart Card interface function is disabled
1	Smart Card interface function is enabled

Smart Card Data Invert

0	TDR contents are transmitted as they are Receive data is stored in RDR as it is
1	TDR contents are inverted before being transmitted Receive data is stored in RDR in inverted form

Smart Card Data Direction

0	TDR contents are transmitted LSB-first Receive data is stored in RDR LSB-first
1	TDR contents are transmitted MSB-first Receive data is stored in RDR MSB-first

SMR1—Serial Mode Register 1 **H'FF80** **SCI1**

Bit :	7	6	5	4	3	2	1	0
	C/$\overline{A}$	CHR	PE	O/$\overline{E}$	STOP	MP	CKS1	CKS0
Initial value :	0	0	0	0	0	0	0	0
Read/Write :	R/W	R/W	R/W	R/W	R/W	R/W	R/W	R/W

Clock Select

0	0	ø clock
	1	ø/4 clock
1	0	ø/16 clock
	1	ø/64 clock

Multiprocessor Mode

0	Multiprocessor function disabled
1	Multiprocessor format selected

Stop Bit Length

0	1 stop bit
1	2 stop bits

Parity Mode

0	Even parity
1	Odd parity

Parity Enable

0	Parity bit addition and checking disabled
1	Parity bit addition and checking enabled

Character Length

0	8-bit data
1	7-bit data*

Note: * When 7-bit data is selected, the MSB (bit 7) of TDR is not transmitted.

Asynchronous Mode/Synchronous Mode Select

0	Asynchronous mode
1	Synchronous mode

SMR1—Serial Mode Register 1 **H'FF80** **Smart Card Interface 1**

Bit :	7	6	5	4	3	2	1	0
	GM	CHR	PE	O/$\overline{E}$	STOP	MP	CKS1	CKS0
Initial value :	0	0	0	0	0	0	0	0
Read/Write :	R/W	R/W	R/W	R/W	R/W	R/W	R/W	R/W

Clock Select

0	0	ø clock
	1	ø/4 clock
1	0	ø/16 clock
	1	ø/64 clock

Multiprocessor Mode

0	Multiprocessor function disabled
1	Setting prohibited

Stop Bit Length

0	Setting prohibited
1	2 stop bits

Parity Mode

0	Even parity
1	Odd parity

Parity Enable

0	Setting prohibited
1	Parity bit addition and checking enabled

Character Length

0	8-bit data
1	Setting prohibited

GSM Mode

0	Normal Smart Card interface mode operation • TEND flag generated 12.5 etu after beginning of start bit • Clock output on/off control only
1	GSM mode Smart Card interface mode operation • TEND flag generated 11.0 etu after beginning of start bit • Fixed high/low-level control possible (set in SCR) in addition to clock output on/off control

Note: etu: Elementary time unit (time for transfer of 1 bit)

BRR1—Bit Rate Register 1 **H'FF81 SCI1, Smart Card Interface 1**

Bit :	7	6	5	4	3	2	1	0
Initial value :	1	1	1	1	1	1	1	1
Read/Write :	R/W	R/W	R/W	R/W	R/W	R/W	R/W	R/W
	Sets the serial transfer bit rate							

Note: See section 14.2.8, Bit Rate Register (BRR), for details.

SCR1—Serial Control Register 1 H'FF82 SCI1

Bit :	7	6	5	4	3	2	1	0
	TIE	RIE	TE	RE	MPIE	TEIE	CKE1	CKE0
Initial value :	0	0	0	0	0	0	0	0
Read/Write :	R/W	R/W	R/W	R/W	R/W	R/W	R/W	R/W

Clock Enable

0	0	Asynchronous mode	Internal clock/SCK pin functions as I/O port
		Synchronous mode	Internal clock/SCK pin functions as serial clock output
	1	Asynchronous mode	Internal clock/SCK pin functions as clock output*1
		Synchronous mode	Internal clock/SCK pin functions as serial clock output
1	0	Asynchronous mode	External clock/SCK pin functions as clock input*2
		Synchronous mode	External clock/SCK pin functions as serial clock input
	1	Asynchronous mode	External clock/SCK pin functions as clock input*2
		Synchronous mode	External clock/SCK pin functions as serial clock input

Notes: 1. Outputs a clock of the same frequency as the bit rate.
2. Inputs a clock with a frequency 16 times the bit rate.

Transmit End Interrupt Enable

0	Transmit end interrupt (TEI) request disabled
1	Transmit end interrupt (TEI) request enabled

Multiprocessor Interrupt Enable

0	Multiprocessor interrupts disabled [Clearing conditions] • When the MPIE bit is cleared to 0 • When MPB= 1 data is received
1	Multiprocessor interrupts enabled Receive data full interrupt (RXI) requests, receive error interrupt (ERI) requests, and setting of the RDRF, FER, and ORER flags in SSR are disabled until data with the multiprocessor bit set to 1 is received

Receive Enable

0	Reception disabled
1	Reception enabled

Transmit Enable

0	Transmission disabled
1	Transmission enabled

Receive Interrupt Enable

0	Receive data full interrupt (RXI) request and receive error interrupt (ERI) request disabled
1	Receive data full interrupt (RXI) request and receive error interrupt (ERI) request enabled

Transmit Interrupt Enable

0	Transmit data empty interrupt (TXI) requests disabled
1	Transmit data empty interrupt (TXI) requests enabled

SCR1—Serial Control Register 1 H'FF82 Smart Card Interface 1

Bit :	7	6	5	4	3	2	1	0
	TIE	RIE	TE	RE	MPIE	TEIE	CKE1	CKE0
Initial value :	0	0	0	0	0	0	0	0
Read/Write :	R/W	R/W	R/W	R/W	R/W	R/W	R/W	R/W

Clock Enable

SCMR	SMR	SCR setting		SCK pin function
SMIF	C/$\overline{A}$,GM	CKE1	CKE0	
0	See SCI specification			
1	0	0	0	Operates as port input pin
1	0	0	1	Clock output as SCK output pin
1	1	0	0	Fixed-low output as SCK output pin
1	1	0	1	Clock output as SCK output pin
1	1	1	0	Fixed-high output as SCK output pin
1	1	1	1	Clock output as SCK output pin

Transmit End Interrupt Enable

0	Transmit end interrupt (TEI) request disabled
1	Transmit end interrupt (TEI) request enabled

Multiprocessor Interrupt Enable

0	Multiprocessor interrupts disabled [Clearing conditions] • When the MPIE bit is cleared to 0 • When MPB= 1 data is received
1	Multiprocessor interrupts enabled Receive data full interrupt (RXI) requests, receive error interrupt (ERI) requests, and setting of the RDRF, FER, and ORER flags in SSR are disabled until data with the multiprocessor bit set to 1 is received

Receive Enable

0	Reception disabled
1	Reception enabled

Transmit Enable

0	Transmission disabled
1	Transmission enabled

Receive Interrupt Enable

0	Receive data full interrupt (RXI) request and receive error interrupt (ERI) request disabled
1	Receive data full interrupt (RXI) request and receive error interrupt (ERI) request enabled

Transmit Interrupt Enable

0	Transmit data empty interrupt (TXI) requests disabled
1	Transmit data empty interrupt (TXI) requests enabled

TDR1—Transmit Data Register 1 H'FF83 SCI1, Smart Card Interface 1

Bit :	7	6	5	4	3	2	1	0
Initial value :	1	1	1	1	1	1	1	1
Read/Write :	R/W	R/W	R/W	R/W	R/W	R/W	R/W	R/W

Stores data for serial transmission

SSR1—Serial Status Register 1 H'FF84 SCI1

Bit	7	6	5	4	3	2	1	0
	TDRE	RDRF	ORER	FER	PER	TEND	MPB	MPBT
Initial value	1	0	0	0	0	1	0	0
Read/Write	R/(W)*	R/(W)*	R/(W)*	R/(W)*	R/(W)*	R	R	R/W

Multiprocessor Bit Transfer

0	Data with a 0 multiprocessor bit is transmitted
1	Data with a 1 multiprocessor bit is transmitted

Multiprocessor Bit

0	[Clearing condition] When data with a 0 multiprocessor bit is received
1	[Setting condition] When data with a 1 multiprocessor bit is received

Transmit End

0	[Clearing conditions] • When 0 is written to TDRE after reading TDRE = 1 • When the DMAC or DTC is activated by a TXI interrupt and write data to TDR
1	[Setting conditions] • When the TE bit in SCR is 0 • When TDRE = 1 at transmission of the last bit of a 1-byte serial transmit character

Parity Error

0	[Clearing condition] When 0 is written to PER after reading PER = 1
1	[Setting condition] When, in reception, the number of 1 bits in the receive data plus the parity bit does not match the parity setting (even or odd) specified by the O/$\overline{E}$ bit in SMR

Framing Error

0	[Clearing condition] When 0 is written to FER after reading FER = 1
1	[Setting condition] When the SCI checks whether the stop bit at the end of the receive data when reception ends, and the stop bit is 0

Overrun Error

0	[Clearing condition] When 0 is written to ORER after reading ORER = 1
1	[Setting condition] When the next serial reception is completed while RDRF = 1

Receive Data Register Full

0	[Clearing conditions] • When 0 is written to RDRF after reading RDRF = 1 • When the DMAC or DTC is activated by an RXI interrupt and read data from RDR
1	[Setting condition] When serial reception ends normally and receive data is transferred from RSR to RDR

Transmit Data Register Empty

0	[Clearing conditions] • When 0 is written to TDRE after reading TDRE = 1 • When the DMAC or DTC is activated by a TXI interrupt and write data to TDR
1	[Setting conditions] • When the TE bit in SCR is 0 • When data is transferred from TDR to TSR and data can be written to TDR

Note: * Can only be written with 0 for flag clearing.

SSR1—Serial Status Register 1 H'FF84 Smart Card Interface 1

Bit :	7	6	5	4	3	2	1	0
	TDRE	RDRF	ORER	ERS	PER	TEND	MPB	MPBT
Initial value :	1	0	0	0	0	1	0	0
Read/Write :	R/(W)*	R/(W)*	R/(W)*	R/(W)*	R/(W)*	R	R	R/W

Multiprocessor Bit Transfer

0	Data with a 0 multiprocessor bit is transmitted
1	Data with a 1 multiprocessor bit is transmitted

Multiprocessor Bit

0	[Clearing condition] When data with a 0 multiprocessor bit is received
1	[Setting condition] When data with a 1 multiprocessor bit is received

Transmit End

0	[Clearing conditions] • When 0 is written to TDRE after reading TDRE = 1 • When the DMAC or DTC is activated by a TXI interrupt and write data to TDR
1	[Setting conditions] • On reset, or in standby mode or module stop mode • When the TE bit in SCR is 0 and the ERS bit is 0 • When TDRE = 1 and ERS = 0 (normal transmission) 2.5 etu after a 1-byte serial character is sent when GM = 0 • When TDRE = 1 and ERS = 0 (normal transmission) 1.0 etu after a 1-byte serial character is sent when GM = 1

Note: etu: Elementary Time Unit (time for transfer of 1 bit)

Parity Error

0	[Clearing condition] When 0 is written to PER after reading PER = 1
1	[Setting condition] When, in reception, the number of 1 bits in the receive data plus the parity bit does not match the parity setting (even or odd) specified by the O/$\overline{E}$ bit in SMR

Error Signal Status

0	[Clearing conditions] • On reset, or in standby mode or module stop mode • When 0 is written to ERS after reading ERS =1
1	[Setting condition] When the error signal is sampled at the low level

Note: Clearing the TE bit in SCR to 0 does not affect the ERS flag, which retains its prior state.

Overrun Error

0	[Clearing condition] When 0 is written to ORER after reading ORER = 1
1	[Setting condition] When the next serial reception is completed while RDRF = 1

Receive Data Register Full

0	[Clearing conditions] • When 0 is written to RDRF after reading RDRF = 1 • When the DMAC or DTC is activated by an RXI interrupt and read data from RDR
1	[Setting condition] When serial reception ends normally and receive data is transferred from RSR to RDR

Transmit Data Register Empty

0	[Clearing conditions] • When 0 is written to TDRE after reading TDRE = 1 • When the DMAC or DTC is activated by a TXI interrupt and write data to TDR
1	[Setting conditions] • When the TE bit in SCR is 0 • When data is transferred from TDR to TSR and data can be written to TDR

Note: * Can only be written with 0 for flag clearing.

RDR1—Receive Data Register 1 **H'FF85 SCI1, Smart Card Interface 1**

Bit :	7	6	5	4	3	2	1	0
Initial value :	0	0	0	0	0	0	0	0
Read/Write :	R	R	R	R	R	R	R	R

Stores received serial data

SCMR1—Smart Card Mode Register 1 **H'FF86 SCI1, Smart Card Interface 1**

Bit :	7	6	5	4	3	2	1	0
	—	—	—	—	SDIR	SINV	—	SMIF
Initial value :	1	1	1	1	0	0	1	0
Read/Write :	—	—	—	—	R/W	R/W	—	R/W

Smart Card Interface Mode Select

0	Smart Card interface function is disabled
1	Smart Card interface function is enabled

Smart Card Data Invert

0	TDR contents are transmitted as they are Receive data is stored in RDR as it is
1	TDR contents are inverted before being transmitted Receive data is stored in RDR in inverted form

Smart Card Data Direction

0	TDR contents are transmitted LSB-first Receive data is stored in RDR LSB-first
1	TDR contents are transmitted MSB-first Receive data is stored in RDR MSB-first

SMR2—Serial Mode Register 2 **H'FF88** **SCI2**

Bit :	7	6	5	4	3	2	1	0
	C/$\overline{A}$	CHR	PE	O/$\overline{E}$	STOP	MP	CKS1	CKS0
Initial value :	0	0	0	0	0	0	0	0
Read/Write :	R/W	R/W	R/W	R/W	R/W	R/W	R/W	R/W

Clock Select

0	0	ø clock
	1	ø/4 clock
1	0	ø/16 clock
	1	ø/64 clock

Multiprocessor Mode

0	Multiprocessor function disabled
1	Multiprocessor format selected

Stop Bit Length

0	1 stop bit
1	2 stop bits

Parity Mode

0	Even parity
1	Odd parity

Parity Enable

0	Parity bit addition and checking disabled
1	Parity bit addition and checking enabled

Character Length

0	8-bit data
1	7-bit data*

Note: * When 7-bit data is selected, the MSB (bit 7) of TDR is not transmitted.

Asynchronous Mode/Synchronous Mode Select

0	Asynchronous mode
1	Synchronous mode

SMR2—Serial Mode Register 2 **H'FF88** **Smart Card Interface 2**

Bit :	7	6	5	4	3	2	1	0
	GM	CHR	PE	O/$\overline{E}$	STOP	MP	CKS1	CKS0
Initial value :	0	0	0	0	0	0	0	0
Read/Write :	R/W	R/W	R/W	R/W	R/W	R/W	R/W	R/W

Clock Select

0	0	ø clock
	1	ø/4 clock
1	0	ø/16 clock
	1	ø/64 clock

Multiprocessor Mode

0	Multiprocessor function disabled
1	Setting prohibited

Stop Bit Length

0	Setting prohibited
1	2 stop bits

Parity Mode

0	Even parity
1	Odd parity

Parity Enable

0	Setting prohibited
1	Parity bit addition and checking enabled

Character Length

0	8-bit data
1	Setting prohibited

GSM Mode

0	Normal Smart Card interface mode operation • TEND flag generated 12.5 etu after beginning of start bit • Clock output on/off control only
1	GSM mode Smart Card interface mode operation • TEND flag generated 11.0 etu after beginning of start bit • Fixed high/low-level control possible (set in SCR) in addition to clock output on/off control

Note: etu: Elementary time unit (time for transfer of 1 bit)

BRR2—Bit Rate Register 2 **H'FF89 SCI2, Smart Card Interface 2**

Bit :	7	6	5	4	3	2	1	0
Initial value :	1	1	1	1	1	1	1	1
Read/Write :	R/W	R/W	R/W	R/W	R/W	R/W	R/W	R/W
	Sets the serial transfer bit rate							

Note: See section 14.2.8, Bit Rate Register (BRR), for details.

SCR2—Serial Control Register 2 H'FF8A SCI2

Bit :	7	6	5	4	3	2	1	0
	TIE	RIE	TE	RE	MPIE	TEIE	CKE1	CKE0
Initial value :	0	0	0	0	0	0	0	0
Read/Write :	R/W	R/W	R/W	R/W	R/W	R/W	R/W	R/W

Clock Enable

0	0	Asynchronous mode	Internal clock/SCK pin functions as I/O port
		Synchronous mode	Internal clock/SCK pin functions as serial clock output
	1	Asynchronous mode	Internal clock/SCK pin functions as clock output*1
		Synchronous mode	Internal clock/SCK pin functions as serial clock output
1	0	Asynchronous mode	External clock/SCK pin functions as clock input*2
		Synchronous mode	External clock/SCK pin functions as serial clock input
	1	Asynchronous mode	External clock/SCK pin functions as clock input*2
		Synchronous mode	External clock/SCK pin functions as serial clock input

Notes: 1. Outputs a clock of the same frequency as the bit rate.
2. Inputs a clock with a frequency 16 times the bit rate.

Transmit End Interrupt Enable

0	Transmit end interrupt (TEI) request disabled
1	Transmit end interrupt (TEI) request enabled

Multiprocessor Interrupt Enable

0	Multiprocessor interrupts disabled [Clearing conditions] • When the MPIE bit is cleared to 0 • When MPB= 1 data is received
1	Multiprocessor interrupts enabled Receive data full interrupt (RXI) requests, receive error interrupt (ERI) requests, and setting of the RDRF, FER, and ORER flags in SSR are disabled until data with the multiprocessor bit set to 1 is received

Receive Enable

0	Reception disabled
1	Reception enabled

Transmit Enable

0	Transmission disabled
1	Transmission enabled

Receive Interrupt Enable

0	Receive data full interrupt (RXI) request and receive error interrupt (ERI) request disabled
1	Receive data full interrupt (RXI) request and receive error interrupt (ERI) request enabled

Transmit Interrupt Enable

0	Transmit data empty interrupt (TXI) requests disabled
1	Transmit data empty interrupt (TXI) requests enabled

SCR2—Serial Control Register 2 H'FF8A Smart Card Interface 2

Bit :	7	6	5	4	3	2	1	0
	TIE	RIE	TE	RE	MPIE	TEIE	CKE1	CKE0
Initial value :	0	0	0	0	0	0	0	0
Read/Write :	R/W	R/W	R/W	R/W	R/W	R/W	R/W	R/W

Clock Enable

SCMR	SMR	SCR setting		SCK pin function
SMIF	C/$\overline{A}$,GM	CKE1	CKE0	
0	See SCI specification			
1	0	0	0	Operates as port input pin
1	0	0	1	Clock output as SCK output pin
1	1	0	0	Fixed-low output as SCK output pin
1	1	0	1	Clock output as SCK output pin
1	1	1	0	Fixed-high output as SCK output pin
1	1	1	1	Clock output as SCK output pin

Transmit End Interrupt Enable

0	Transmit end interrupt (TEI) request disabled
1	Transmit end interrupt (TEI) request enabled

Multiprocessor Interrupt Enable

0	Multiprocessor interrupts disabled [Clearing conditions] • When the MPIE bit is cleared to 0 • When MPB= 1 data is received
1	Multiprocessor interrupts enabled Receive data full interrupt (RXI) requests, receive error interrupt (ERI) requests, and setting of the RDRF, FER, and ORER flags in SSR are disabled until data with the multiprocessor bit set to 1 is received

Receive Enable

0	Reception disabled
1	Reception enabled

Transmit Enable

0	Transmission disabled
1	Transmission enabled

Receive Interrupt Enable

0	Receive data full interrupt (RXI) request and receive error interrupt (ERI) request disabled
1	Receive data full interrupt (RXI) request and receive error interrupt (ERI) request enabled

Transmit Interrupt Enable

0	Transmit data empty interrupt (TXI) requests disabled
1	Transmit data empty interrupt (TXI) requests enabled

TDR2—Transmit Data Register 2 H'FF8B SCI2, Smart Card Interface 2

Bit :	7	6	5	4	3	2	1	0
Initial value :	1	1	1	1	1	1	1	1
Read/Write :	R/W	R/W	R/W	R/W	R/W	R/W	R/W	R/W

Stores data for serial transmission

SSR2—Serial Status Register 2 H'FF8C SCI2

Bit :	7	6	5	4	3	2	1	0
	TDRE	RDRF	ORER	FER	PER	TEND	MPB	MPBT
Initial value :	1	0	0	0	0	1	0	0
Read/Write :	R/(W)*	R/(W)*	R/(W)*	R/(W)*	R/(W)*	R	R	R/W

Multiprocessor Bit Transfer

0	Data with a 0 multiprocessor bit is transmitted
1	Data with a 1 multiprocessor bit is transmitted

Multiprocessor Bit

0	[Clearing condition] When data with a 0 multiprocessor bit is received
1	[Setting condition] When data with a 1 multiprocessor bit is received

Transmit End

0	[Clearing conditions] • When 0 is written to TDRE after reading TDRE = 1 • When the DMAC or DTC is activated by a TXI interrupt and write data to TDR
1	[Setting conditions] • When the TE bit in SCR is 0 • When TDRE = 1 at transmission of the last bit of a 1-byte serial transmit character

Parity Error

0	[Clearing condition] When 0 is written to PER after reading PER = 1
1	[Setting condition] When, in reception, the number of 1 bits in the receive data plus the parity bit does not match the parity setting (even or odd) specified by the O/$\overline{E}$ bit in SMR

Framing Error

0	[Clearing condition] When 0 is written to FER after reading FER = 1
1	[Setting condition] When the SCI checks whether the stop bit at the end of the receive data when reception ends, and the stop bit is 0

Overrun Error

0	[Clearing condition] When 0 is written to ORER after reading ORER = 1
1	[Setting condition] When the next serial reception is completed while RDRF = 1

Receive Data Register Full

0	[Clearing conditions] • When 0 is written to RDRF after reading RDRF = 1 • When the DMAC or DTC is activated by an RXI interrupt and read data from RDR
1	[Setting condition] When serial reception ends normally and receive data is transferred from RSR to RDR

Transmit Data Register Empty

0	[Clearing conditions] • When 0 is written to TDRE after reading TDRE = 1 • When the DMAC or DTC is activated by a TXI interrupt and write data to TDR
1	[Setting conditions] • When the TE bit in SCR is 0 • When data is transferred from TDR to TSR and data can be written to TDR

Note: * Can only be written with 0 for flag clearing.

SSR2—Serial Status Register 2 H'FF8C Smart Card Interface 2

Bit :	7	6	5	4	3	2	1	0
	TDRE	RDRF	ORER	ERS	PER	TEND	MPB	MPBT
Initial value :	1	0	0	0	0	1	0	0
Read/Write :	R/(W)*	R/(W)*	R/(W)*	R/(W)*	R/(W)*	R	R	R/W

Multiprocessor Bit Transfer

0	Data with a 0 multiprocessor bit is transmitted
1	Data with a 1 multiprocessor bit is transmitted

Multiprocessor Bit

0	[Clearing condition] When data with a 0 multiprocessor bit is received
1	[Setting condition] When data with a 1 multiprocessor bit is received

Transmit End

0	[Clearing conditions] • When 0 is written to TDRE after reading TDRE = 1 • When the DMAC or DTC is activated by a TXI interrupt and write data to TDR
1	[Setting conditions] • On reset, or in standby mode or module stop mode • When the TE bit in SCR is 0 and the ERS bit is 0 • When TDRE = 1 and ERS = 0 (normal transmission) 2.5 etu after a 1-byte serial character is sent when GM = 0 • When TDRE = 1 and ERS = 0 (normal transmission) 1.0 etu after a 1-byte serial character is sent when GM = 1

Note: etu: Elementary Time Unit (time for transger of 1 bit)

Parity Error

0	[Clearing condition] When 0 is written to PER after reading PER = 1
1	[Setting condition] When, in reception, the number of 1 bits in the receive data plus the parity bit does not match the parity setting (even or odd) specified by the O/$\overline{E}$ bit in SMR

Error Signal Status

0	[Clearing conditions] • On reset, or in standby mode or module stop mode • When 0 is written to ERS after reading ERS =1
1	[Setting condition] When the error signal is sampled at the low level

Note: Clearing the TE bit in SCR to 0 does not affect the ERS flag, which retains its prior state.

Overrun Error

0	[Clearing condition] When 0 is written to ORER after reading ORER = 1
1	[Setting condition] When the next serial reception is completed while RDRF = 1

Receive Data Register Full

0	[Clearing conditions] • When 0 is written to RDRF after reading RDRF = 1 • When the DMAC or DTC is activated by an RXI interrupt and read data from RDR
1	[Setting condition] When serial reception ends normally and receive data is transferred from RSR to RDR

Transmit Data Register Empty

0	[Clearing conditions] • When 0 is written to TDRE after reading TDRE = 1 • When the DMAC or DTC is activated by a TXI interrupt and write data to TDR
1	[Setting conditions] • When the TE bit in SCR is 0 • When data is transferred from TDR to TSR and data can be written to TDR

Note: * Can only be written with 0 for flag clearing.

RDR2—Receive Data Register 2 **H'FF8D SCI2, Smart Card Interface 2**

Bit :	7	6	5	4	3	2	1	0
Initial value :	0	0	0	0	0	0	0	0
Read/Write :	R	R	R	R	R	R	R	R

Stores received serial data

SCMR2—Smart Card Mode Register 2 **H'FF8E SCI2, Smart Card Interface 2**

Bit :	7	6	5	4	3	2	1	0
	—	—	—	—	SDIR	SINV	—	SMIF
Initial value :	1	1	1	1	0	0	1	0
Read/Write :	—	—	—	—	R/W	R/W	—	R/W

Smart Card Interface Mode Select

0	Smart Card interface function is disabled
1	Smart Card interface function is enabled

Smart Card Data Invert

0	TDR contents are transmitted as they are Receive data is stored in RDR as it is
1	TDR contents are inverted before being transmitted Receive data is stored in RDR in inverted form

Smart Card Data Direction

0	TDR contents are transmitted LSB-first Receive data is stored in RDR LSB-first
1	TDR contents are transmitted MSB-first Receive data is stored in RDR MSB-first

ADDRAH	**—**	**A/D Data Register AH**	**H'FF90**	**A/D Converter**
ADDRAL	**—**	**A/D Data Register AL**	**H'FF91**	**A/D Converter**
ADDRBH	**—**	**A/D Data Register BH**	**H'FF92**	**A/D Converter**
ADDRBL	**—**	**A/D Data Register BL**	**H'FF93**	**A/D Converter**
ADDRCH	**—**	**A/D Data Register CH**	**H'FF94**	**A/D Converter**
ADDRCL	**—**	**A/D Data Register CL**	**H'FF95**	**A/D Converter**
ADDRDH	**—**	**A/D Data Register DH**	**H'FF96**	**A/D Converter**
ADDRDL	**—**	**A/D Data Register DL**	**H'FF97**	**A/D Converter**

Bit	:	15	14	13	12	11	10	9	8	7	6	5	4	3	2	1	0
		AD9	AD8	AD7	AD6	AD5	AD4	AD3	AD2	AD1	AD0	—	—	—	—	—	—
Initial value	:	0	0	0	0	0	0	0	0	0	0	0	0	0	0	0	0
Read/Write	:	R	R	R	R	R	R	R	R	R	R	R	R	R	R	R	R

Stores the results of A/D conversion

Analog Input Channel		A/D Data Register
Group 0	Group 1	
AN0	AN4	ADDRA
AN1	AN5	ADDRB
AN2	AN6	ADDRC
AN3	AN7	ADDRD

ADCSR—A/D Control/Status Register **H'FF98** **A/D Converter**

Bit :	7	6	5	4	3	2	1	0
	ADF	ADIE	ADST	SCAN	CKS	CH2	CH1	CH0
Initial value :	0	0	0	0	0	0	0	0
Read/Write :	R/(W)*	R/W	R/W	R/W	R/W	R/W	R/W	R/W

Channel Select

Group select	Channel select		Single Mode	Group Mode
CH2	CH1	CH0		
0	0	0	AN0	AN0
		1	AN1	AN0, AN1
	1	0	AN2	AN0 to AN2
		1	AN3	AN0 to AN3
1	0	0	AN4	AN4
		1	AN5	AN4, AN5
	1	0	AN6	AN4 to AN6
		1	AN7	AN4 to AN7

Group Select

0	Conversion time= 266 states (max.)
1	Conversion time= 134 states (max.)

Scan Mode

0	Single mode
1	Scan mode

A/D Start

0	A/D conversion stopped
1	• Single mode: A/D conversion is started. Cleared to 0 automatically when conversion ends • Scan mode: A/D conversion is started. Conversion continues sequentially on the selected channels until ADST is cleared to 0 by software, a reset, or transition to standby mode or module stop mode

A/D Interrupt Enable

0	A/D conversion end interrupt (ADI) request disabled
1	A/D conversion end interrupt (ADI) request enabled

A/D End Flag

0	[Clearing conditions] • When 0 is written to the ADF flag after reading ADF = 1 • When the DTC is activated by an ADI interrupt, and ADDR is read
1	[Setting conditions] • Single mode: When A/D conversion ends • Scan mode: When one round of conversion has been performed on all specified channels

Note: * Can only be written with 0 for flag clearing.

ADCR—A/D Control Register **H'FF99** **A/D**

Bit :	7	6	5	4	3	2	1	0
	TRGS1	TRGS0	—	—	—	—	—	—
Initial value :	0	0	1	1	1	1	1	1
Read/Write :	R/W	R/W	—	—	—/(R/W)*	—/(R/W)*	—	—

Timer Trigger Select

TRGS1	TRGS1	Description
0	0	A/D conversion start by external trigger is disabled
	1	A/D conversion start by external trigger (TPU) is enabled
1	0	A/D conversion start by external trigger (8-bit timer) is enabled
	1	A/D conversion start by external trigger pin ($\overline{\text{ADTRG}}$) is enabled

Note: * Applies to the H8S/2398, H8S/2394, H8S/2392, and H8S/2390.
These bits are reserved, so should always be written with 1.

DADR0—D/A Data Register 0 **H'FFA4** **D/A**
DADR1—D/A Data Register 1 **H'FFA5** **D/A**

Bit :	7	6	5	4	3	2	1	0
Initial value :	0	0	0	0	0	0	0	0
Read/Write :	R/W	R/W	R/W	R/W	R/W	R/W	R/W	R/W

Stores data for D/A conversion

DACR—D/A Control Register **H'FFA6** **D/A**

Bit :	7	6	5	4	3	2	1	0
	DAOE1	DAOE0	DAE	—	—	—	—	—
Initial value :	0	0	0	1	1	1	1	1
Read/Write :	R/W	R/W	R/W	—	—	—	—	—

D/A Output Enable 0

0	Analog output DA0 is disabled
1	Channel 0 D/A conversion is enabled Analog output DA0 is enabled

D/A Output Enable 1

0	Analog output DA1 is disabled
1	Channel 1 D/A conversion is enabled Analog output DA1 is enabled

D/A Conversion Control

DAOE1	DAOE0	DAE	Description
0	0	×	Channel 0 and 1 D/A conversion disabled
	1	0	Channel 0 D/A conversion enabled
			Channel 1 D/A conversion disabled
		1	Channel 0 and 1 D/A conversions enabled
1	0	0	Channel 0 D/A conversion disabled
			Channel 1 D/A conversion enabled
		1	Channel 0 and 1 D/A conversion enabled
	1	×	Channel 0 and 1 D/A conversion enabled

×: Don't care

DACR—Reserved Register **H'FFAC** **D/A**

Bit :	7	6	5	4	3	2	1	0
	—	—	—	—	—	—	—	—
Initial value :	0	0	1	1	0	0	0	0
Read/Write :	R/W	R/W	R/W	R/W	R/W	R	R	R

Reserved, so should always be written with 0.

Reserved, so should always be written with 1.

Reserved, so should always be written with 0.

TCR0—Time Control Register 0 **H'FFB0** **8-Bit Timer Channel 0**
TCR1—Time Control Register 1 **H'FFB1** **8-Bit Timer Channel 1**

Bit :	7	6	5	4	3	2	1	0
	CMIEB	CMIEA	OVIE	CCLR1	CCLR0	CKS2	CKS1	CKS0
Initial value :	0	0	0	0	0	0	0	0
Read/Write :	R/W	R/W	R/W	R/W	R/W	R/W	R/W	R/W

Clock Select

0	0	0	Clock input disabled
		1	Internal clock: counted at falling edge of ø/8
	1	0	Internal clock: counted at falling edge of ø/64
		1	Internal clock: counted at falling edge of ø/8192
1	0	0	For channel 0: Count at TCNT1 overflow signal* For channel 1: Count at TCNT0 compare match A*
		1	External clock: counted at rising edge
	1	0	External clock: counted at falling edge
		1	External clock: counted at both rising and falling edges

Note: * If the count input of channel 0 is the TCNT1 overflow signal and that of channel 1 is the TCNT0 compare match signal, no incrementing clock is generated. Do not use this setting.

Counter Clear

0	0	Clear is disabled
	1	Clear by compare match A
1	0	Clear by compare match B
	1	Clear by rising edge of external reset input

Timer Overflow Interrupt Enable

0	OVF interrupt requests (OVI) are disabled
1	OVF interrupt requests (OVI) are enabled

Compare Match Interrupt Enable A

0	CMFA interrupt requests (CMIA) are disabled
1	CMFA interrupt requests (CMIA) are enabled

Compare Match Interrupt Enable B

0	CMFB interrupt requests (CMIB) are disabled
1	CMFB interrupt requests (CMIB) are enabled

TCSR0—Timer Control/Status Register 0 **H'FFB2** **8-Bit Timer Channel 0**
TCSR1—Timer Control/Status Register 1 **H'FFB3** **8-Bit Timer Channel 1**

	Bit	7	6	5	4	3	2	1	0
TCSR0		CMFB	CMFA	OVF	ADTE	OS3	OS2	OS1	OS0
	Initial value	0	0	0	0	0	0	0	0
	Read/Write	R/(W)*	R/(W)*	R/(W)*	R/W	R/W	R/W	R/W	R/W
TCSR1	Bit	7	6	5	4	3	2	1	0
		CMFB	CMFA	OVF	—	OS3	OS2	OS1	OS0
	Initial value	0	0	0	1	0	0	0	0
	Read/Write	R/(W)*	R/(W)*	R/(W)*	—	R/W	R/W	R/W	R/W

Output Select

0	0	No change when compare match A occurs
	1	0 is output when compare match A occurs
1	0	1 is output when compare match A occurs
	1	Output is inverted when compare match A occurs (toggle output)

Output Select

0	0	No change when compare match B occurs
	1	0 is output when compare match B occurs
1	0	1 is output when compare match B occurs
	1	Output is inverted when compare match B occurs (toggle output)

A/D Trigger Enable (TCSR0 only)

0	A/D converter start requests by compare match A are disabled
1	A/D converter start requests by compare match A are enabled

Timer Overflow Flag

0	[Clearing condition] Cleared by reading OVF when OVF = 1, then writing 0 to OVF
1	[Setting condition] Set when TCNT overflows (changes from H'FF to H'00)

Compare Match Flag A

0	[Clearing conditions] • Cleared by reading CMFA when CMFA = 1, then writing 0 to CMFA • When the DTC is activated by a CMIA interrupt, while DISEL bit of MRB in DTC is 0.
1	[Setting condition] Set when TCNT matches TCORA

Compare Match Flag B

0	[Clearing conditions] • Cleared by reading CMFB when CMFB = 1, then writing 0 to CMFB • When the DTC is activated by a CMIB interrupt, while DISEL bit of MRB in DTC is 0.
1	[Setting condition] Set when TCNT matches TCORB

Note: * Only 0 can be written to bits 7 to 5, to clear these flags.

TCORA0—Time Constant Register A0 **H'FFB4** **8-Bit Timer Channel 0**
TCORA1—Time Constant Register A1 **H'FFB5** **8-Bit Timer Channel 1**

	TCORA0								TCORA1							
Bit :	15	14	13	12	11	10	9	8	7	6	5	4	3	2	1	0
Initial value :	1	1	1	1	1	1	1	1	1	1	1	1	1	1	1	1
Read/Write :	R/W	R/W	R/W	R/W	R/W	R/W	R/W	R/W	R/W	R/W	R/W	R/W	R/W	R/W	R/W	R/W

TCORB0—Time Constant Register B0 **H'FFB6** **8-Bit Timer Channel 0**
TCORB1—Time Constant Register B1 **H'FFB7** **8-Bit Timer Channel 1**

	TCORB0								TCORB1							
Bit :	15	14	13	12	11	10	9	8	7	6	5	4	3	2	1	0
Initial value :	1	1	1	1	1	1	1	1	1	1	1	1	1	1	1	1
Read/Write :	R/W	R/W	R/W	R/W	R/W	R/W	R/W	R/W	R/W	R/W	R/W	R/W	R/W	R/W	R/W	R/W

TCNT0—Timer Counter 0 **H'FFB8** **8-Bit Timer Channel 0**
TCNT1—Timer Counter 1 **H'FFB9** **8-Bit Timer Channel 1**

	TCNT0								TCNT1							
Bit :	15	14	13	12	11	10	9	8	7	6	5	4	3	2	1	0
Initial value :	0	0	0	0	0	0	0	0	0	0	0	0	0	0	0	0
Read/Write :	R/W	R/W	R/W	R/W	R/W	R/W	R/W	R/W	R/W	R/W	R/W	R/W	R/W	R/W	R/W	R/W

TCSR—Timer Control/Status Register **H'FFBC (W), H'FFBC (R)** **WDT**

Bit :	7	6	5	4	3	2	1	0
	OVF	WT/$\overline{\text{IT}}$	TME	—	—	CKS2	CKS1	CKS0
Initial value :	0	0	0	1	1	0	0	0
Read/Write :	R/(W)*	R/W	R/W	—	—	R/W	R/W	R/W

Clock Select

CKS2	CKS1	CKS0	Clock	Overflow period* (when ø = 20 MHz)
0	0	0	ø/2 (initial value)	25.6µs
		1	ø/64	819.2µs
	1	0	ø/128	1.6ms
		1	ø/512	6.6ms
1	0	0	ø/2,048	26.2ms
		1	ø/8,192	104.9ms
	1	0	ø/32,768	419.4ms
		1	ø/131,072	1.68s

Note: * The overflow period is the time from when TCNT starts counting up from H'00 until overflow occurs.

Timer Enable

0	TCNT is initialized to H'00 and halted
1	TCNT counts

Timer Mode Select

0	Interval timer mode: Sends the CPU an interval timer interrupt request (WOVI) when TCNT overflows
1	Watchdog timer mode: Generates the $\overline{\text{WDTOVF}}$ signal*1 when TCNT overflows*2

Notes: 1. The $\overline{\text{WDTOVF}}$ pin function is not available in the F-ZTAT version, H8S/2398, H8S/2394, H8S/2392, or H8S/2390.
2. For details of the case where TCNT overflows in watchdog time mode, see section 13.2.3, Reset Control/Status Register(RSTCSR).

Overflow Flag

0	[Clearing condition] Cleared by reading TCSR when OVF = 1, then writing 0 to OVF
1	[Setting condition] Set when TCNT overflows from H'FF to H'00 in interval timer mode

The method for writing to TCSR is different from that for general registers to prevent accidental overwriting. For details see section 13.2.4, Notes on Register Access.

Note: * Can only be written with 0 for flag clearing.

TCNT—Timer Counter **H'FFBC (W), H'FFBD (R)** **WDT**

Bit :	7	6	5	4	3	2	1	0
Initial value :	0	0	0	0	0	0	0	0
Read/Write :	R/W	R/W	R/W	R/W	R/W	R/W	R/W	R/W

TCNT is an 8-bit readable/writable* up-counter.

Note: * TCNT is write-protected by a password to prevent accidental overwriting.
For details see section 13.2.4, Notes on Register Access.

RSTCSR—Reset Control/Status Register **H'FFBE (W) , H'FFBF (R)** **WDT**

Bit :	7	6	5	4	3	2	1	0
	WOVF	RSTE	RSTS	—	—	—	—	—
Initial value :	0	0	0	1	1	1	1	1
Read/Write :	R/(W)*	R/W	R/W	—	—	—	—	—

Reset Select

0	Power-on reset
1	Manual reset*

Note: * Manual reset is not supported in the H8S/2357 (F-ZTAT and masked ROM versions) or the H8S/2352, H8S/2398, H8S/2394, H8S/2392 and H8S/2390. In these models, only 0 should be written to this bit.

Reset Enable

0	Reset signal is not generated if TCNT overflows*
1	Reset signal is generated if TCNT overflows

Note: * The modules H8S/2357 Group are not reset, but TCNT and TCSR in WDT are reset.

Watchdog Timer Overflow Flag

0	[Clearing condition] Cleared by reading RSTCSR when WOVF = 1, then writing 0 to WOVF
1	[Setting condition] Set when TCNT overflows (changed from H'FF to H'00) during watchdog timer operation

Note: * Can only be written with 0 for flag clearing.

The method for writing to RSTCSR is different from that for general registers to prevent accidental overwriting. For details see section 13.2.4, Notes on Register Access.

TSTR—Timer Start Register **H'FFC0** **TPU**

Bit :	7	6	5	4	3	2	1	0
	—	—	CST5	CST4	CST3	CST2	CST1	CST0
Initial value :	0	0	0	0	0	0	0	0
Read/Write :	—	—	R/W	R/W	R/W	R/W	R/W	R/W

Counter Start

0	TCNTn count operation is stopped
1	TCNTn performs count operation

(n = 5 to 0)

Note: If 0 is written to the CST bit during operation with the TIOC pin designated for output, the counter stops but the TIOC pin output compare output level is retained. If TIOR is written to when the CST bit is cleared to 0, the pin output level will be changed to the set initial output value.

TSYR—Timer Synchro Register **H'FFC1** **TPU**

Bit :	7	6	5	4	3	2	1	0
	—	—	SYNC5	SYNC4	SYNC3	SYNC2	SYNC1	SYNC0
Initial value :	0	0	0	0	0	0	0	0
Read/Write :	—	—	R/W	R/W	R/W	R/W	R/W	R/W

Timer Synchronization

0	TCNTn operates independently (TCNT presetting/ clearing is unrelated to other channels)
1	TCNTn performs synchronous operation TCNT synchronous presetting/synchronous clearing is possible

(n = 5 to 0)

Notes: 1. To set synchronous operation, the SYNC bits for at least two channels must be set to 1.
2. To set synchronous clearing, in addition to the SYNC bit, the TCNT clearing source must also be set by means of bits CCLR2 to CCLR0 in TCR.

FLMCR1—Flash Memory Control Register 1 H'FFC8 FLASH (For the H8S/2357 F-ZTAT)

Bit :	7	6	5	4	3	2	1	0
	FWE	SWE	—	—	EV	PV	E	P
Initial value :	—*	0	0	0	0	0	0	0
Read/Write :	R	R/W	—	—	R/W	R/W	R/W	R/W

Program

0	Clears program mode
1	Program mode is entered [Setting condition] FWE=1, SWE=1, and PSU=1

Erase

0	Clears erase mode
1	Erase mode is entered [Setting condition] FWE=1, SWE=1, and ESU=1

Program Verify

0	Clears program verify mode
1	Program verify mode is entered [Setting condition] FWE=1 and SWE=1

Erase Verify

0	Clears erase verify mode
1	Erase verify mode is entered [Setting condition] FWE=1 and SWE=1

Software Write Enable

0	Writing disabled
1	Writing enabled [Setting condition] FWE=1

Flash Write Enable

0	When a low level is input to the FWE pin (hardware protect state)
1	When a high level is input to the FWE pin

Note: * Determined by the state of the FWE pin.

FLMCR2—Flash Memory Control Register 2 H'FFC9 FLASH
(For the H8S/2357 F-ZTAT)

Bit :	7	6	5	4	3	2	1	0
	FLER	—	—	—	—	—	ESU	PSU
Initial value :	0	0	0	0	0	0	0	0
Read/Write :	R	—	—	—	—	—	R/W	R/W

Program Setup

0	Clears program setup
1	Program setup [Setting condition] FWE=1 and SWE=1

Erase Setup

0	Clears erase setup
1	Erase setup [Setting condition] FWE=1 and SWE=1

Flash Memory Error

0	Flash memory operates normally. Writing/erasing protect (error protect) to flash memory is disabled. [Clearing condition] Reset or hardware standby mode
1	Indicates that an error occurs in writing/erasing to flash memory. Writing/erasing protect (error protect) to flash memory is enabled. [Setting condition] See section 19.10.3, Error Protection

EBR1—Erase Block Specification Register 1 **H'FFCA** **FLASH (For the H8S/2357 F-ZTAT)**

EBR2— Erase Block Specification Register 2 **H'FFCB** **FLASH (For the H8S/2357 F-ZTAT)**

Bit	:	7	6	5	4	3	2	1	0
EBR1		—	—	—	—	—	—	EB9	EB8
Initial value	:	0	0	0	0	0	0	0	0
Read/Write	:	—	—	—	—	—	—	R/W	R/W

Bit	:	7	6	5	4	3	2	1	0
EBR2		EB7	EB6	EB5	EB4	EB3	EB2	EB1	EB0
Initial value	:	0	0	0	0	0	0	0	0
Read/Write	:	R/W	R/W	R/W	R/W	R/W	R/W	R/W	R/W

Deviding Erase Blocks

Block (size)	Address
EB0 (1 kbyte)	H'000000 to H'0003FF
EB1 (1 kbyte)	H'000400 to H'0007FF
EB2 (1 kbyte)	H'000800 to H'000BFF
EB3 (1 kbyte)	H'000C00 to H'000FFF
EB4 (28 kbytes)	H'001000 to H'007FFF
EB5 (16 kbytes)	H'008000 to H'00BFFF
EB6 (8 kbytes)	H'00C000 to H'00DFFF
EB7 (8 kbytes)	H'00E000 to H'00FFFF
EB8 (32 kbytes)	H'010000 to H'017FFF
EB9 (32 kbytes)	H'018000 to H'01FFFF

FLMCR1—Flash Memory Control Register 1 H'FFC8 FLASH
(For the H8S/2398 F-ZTAT)

Bit :	7	6	5	4	3	2	1	0
	FWE	SWE	ESU	PSU	EV	PV	E	P
Initial value :	1	0	0	0	0	0	0	0
Read/Write :	R	R/W	R/W	R/W	R/W	R/W	R/W	R/W

Program 1*

0	Clears program mode
1	Program mode is entered [Setting condition] SWE=1 and PSU=1

Erase 1*

0	Clears erase mode
1	Erase mode is entered [Setting condition] SWE=1 and ESU=1

Program Verify 1*

0	Clears program verify mode
1	Program verify mode is entered [Setting condition] SWE=1

Erase Verify 1*

0	Clears erase verify mode
1	Erase verify mode is entered [Setting condition] SWE=1

Program Setup 1*

0	Clears program setup
1	Program setup [Setting condition] SWE=1

Erase Setup 1*

0	Clears erase setup
1	Erase setup [Setting condition] SWE=1

Software Write Enable 1*

0	Writing disabled
1	Writing enabled

Flash Write Enable
Always read as 1. Writing is disabled.

Note: * The target address is H'000000 to H'03FFFF.

FLMCR2—Flash Memory Control Register 2 **H'FFC9** **FLASH (For the H8S/2398 F-ZTAT)**

Bit :	7	6	5	4	3	2	1	0
	FLER	—	—	—	—	—	—	—
Initial value :	0	0	0	0	0	0	0	0
Read/Write :	R	—	—	—	—	—	—	—

Flash Memory Error

0	Flash memory operates normally. Writing/erasing protect (error protect) to flash memory is disabled. [Clearing condition] Reset or hardware standby mode
1	Indicates that an error occurs in writing/erasing to flash memory. Writing/erasing protect (error protect) to flash memory is enabled. [Setting condition] See section 19.19.3, Error Protection

EBR1—Erase Block Specification Register 1 **H'FFCA** **FLASH (For the H8S/2398 F-ZTAT)**

EBR2—Erase Block Specification Register 2 **H'FFCB** **FLASH (For the H8S/2398 F-ZTAT)**

Bit :	7	6	5	4	3	2	1	0
EBR1	EB7	EB6	EB5	EB4	EB3	EB2	EB1	EB0
Initial value :	0	0	0	0	0	0	0	0
Read/Write :	R/W	R/W	R/W	R/W	R/W	R/W	R/W	R/W

Bit :	7	6	5	4	3	2	1	0
EBR2	—	—	—	—	EB11	EB10	EB9	EB8
Initial value :	0	0	0	0	0	0	0	0
Read/Write :	—	—	—	—	R/W	R/W	R/W	R/W

TCR0—Timer Control Register 0 H'FFD0 TPU0

Bit :	7	6	5	4	3	2	1	0
	CCLR2	CCLR1	CCLR0	CKEG1	CKEG0	TPSC2	TPSC1	TPSC0
Initial value :	0	0	0	0	0	0	0	0
Read/Write :	R/W	R/W	R/W	R/W	R/W	R/W	R/W	R/W

Time Prescaler

0	0	0	Internal clock: counts on ø/1
		1	Internal clock: counts on ø/4
	1	0	Internal clock: counts on ø/16
		1	Internal clock: counts on ø/64
1	0	0	External clock: counts on TCLKA pin input
		1	External clock: counts on TCLKB pin input
	1	0	External clock: counts on TCLKC pin input
		1	External clock: counts on TCLKD pin input

Clock Edge

0	0	Count at rising edge
	1	Count at falling edge
1	—	Count at both edges

Counter Clear

0	0	0	TCNT clearing disabled
		1	TCNT cleared by TGRA compare match/input capture
	1	0	TCNT cleared by TGRB compare match/input capture
		1	TCNT cleared by counter clearing for another channel performing synchronous clearing/synchronous operation*1
1	0	0	TCNT clearing disabled
		1	TCNT cleared by TGRC compare match/input capture*2
	1	0	TCNT cleared by TGRD compare match/input capture*2
		1	TCNT cleared by counter clearing for another channel performing synchronous clearing/synchronous operation*1

Notes: 1. Synchronous operation setting is performed by setting the SYNC bit in TSYR to 1.
2. When TGRC or TGRD is used as a buffer register, TCNT is not cleared because the buffer register setting has priority, and compare match/input capture does not occur.

TMDR0—Timer Mode Register 0 **H'FFD1** **TPU0**

Bit :	7	6	5	4	3	2	1	0
	—	—	BFB	BFA	MD3	MD2	MD1	MD0
Initial value :	1	1	0	0	0	0	0	0
Read/Write :	—	—	R/W	R/W	R/W	R/W	R/W	R/W

Mode

0	0	0	0	Normal operation
			1	Reserved
		1	0	PWM mode 1
			1	PWM mode 2
	1	0	0	Phase counting mode 1
			1	Phase counting mode 2
		1	0	Phase counting mode 3
			1	Phase counting mode 4
1	×	×	×	—

×: Don't care

Notes: 1. MD3 is a reserved bit. In a write, it should always be written with 0.
2. Phase counting mode cannot be set for channels 0 and 3. In this case, 0 should always be written to MD2.

TGRA Buffer Operation

0	TGRA operates normally
1	TGRA and TGRC used together for buffer operation

TGRB Buffer Operation

0	TGRB operates normally
1	TGRB and TGRD used together for buffer operation

TIOR0H—Timer I/O Control Register 0H H'FFD2 TPU0

Bit :	7	6	5	4	3	2	1	0
	IOB3	IOB2	IOB1	IOB0	IOA3	IOA2	IOA1	IOA0
Initial value :	0	0	0	0	0	0	0	0
Read/Write :	R/W	R/W	R/W	R/W	R/W	R/W	R/W	R/W

TGR0A I/O Control

0	0	0	0	TGR0A is output compare register	Output disabled	
			1		Initial output is 0 output	0 output at compare match
		1	0			1 output at compare match
			1			Toggle output at compare match
	1	0	0		Output disabled	
			1		Initial output is 1 output	0 output at compare match
		1	0			1 output at compare match
			1			Toggle output at compare match
1	0	0	0	TGR0A is input capture register	Capture input source is TIOCA0 pin	Input capture at rising edge
			1			Input capture at falling edge
		1	×			Input capture at both edges
	1	×	×		Capture input source is channel 1/count clock	Input capture at TCNT1 count-up/ count-down

×: Don't care

TGR0B I/O Control

0	0	0	0	TGR0B is output compare register	Output disabled	
			1		Initial output is 0 output	0 output at compare match
		1	0			1 output at compare match
			1			Toggle output at compare match
	1	0	0		Output disabled	
			1		Initial output is 0 output	0 output at compare match
		1	0			1 output at compare match
			1			Toggle output at compare match
1	0	0	0	TGR0B is input capture register	Capture input source is TIOCB0 pin	Input capture at rising edge
			1			Input capture at falling edge
		1	×			Input capture at both edges
	1	×	×		Capture input source is channel 1/count clock	Input capture at TCNT1 count-up/ count-down*

×: Don't care

Note: * When bits TPSC2 to TPSC0 in TCR1 are set to B'000, and ø/1 is used as the TCNT1 count clock, this setting is invalid and input capture is not generated.

TIOR0L—Timer I/O Control Register 0L H'FFD3 TPU0

Bit	7	6	5	4	3	2	1	0
	IOD3	IOD2	IOD1	IOD0	IOC3	IOC2	IOC1	IOC0
Initial value	0	0	0	0	0	0	0	0
Read/Write	R/W	R/W	R/W	R/W	R/W	R/W	R/W	R/W

TGR0C I/O Control

0	0	0	0	TGR0C is output compare register	Output disabled	
			1		Initial output is 0 output	0 output at compare match
		1	0			1 output at compare match
			1			Toggle output at compare match
	1	0	0		Output disabled	
			1		Initial output is 1 output	0 output at compare match
		1	0			1 output at compare match
			1			Toggle output at compare match
1	0	0	0	TGR0C is input capture register	Capture input source is TIOCC0 pin	Input capture at rising edge
			1			Input capture at falling edge
		1	×			Input capture at both edges
	1	×	×		Capture input source is channel 1/count clock	Input capture at TCNT1 count-up/ count-down

×: Don't care

Note: When the BFA bit in TMDR0 is set to 1 and TGR0C is used as a buffer register, this setting is invalid and input capture/output compare is not generated.

TGR0D I/O Control

0	0	0	0	TGR0D is output compare register *2	Output disabled	
			1		Initial output is 0 output	0 output at compare match
		1	0			1 output at compare match
			1			Toggle output at compare match
	1	0	0		Output disabled	
			1		Initial output is 1 output	0 output at compare match
		1	0			1 output at compare match
			1			Toggle output at compare match
1	0	0	0	TGR0D is input capture register *2	Capture input source is TIOCD0 pin	Input capture at rising edge
			1			Input capture at falling edge
		1	×			Input capture at both edges
	1	×	×		Capture input source is channel 1/count clock	Input capture at TCNT1 count-up/ count-down*1

×: Don't care

Notes: 1. When bits TPSC2 to TPSC0 in TCR1 are set to B'000, and ø/1 is used as the TCNT1 count clock, this setting is invalid and input capture is not generated.
2. When the BFB bit in TMDR0 is set to 1 and TGR0D is used as a buffer register, this setting is invalid and input capture/output compare is not generated.

Note: When TGRC or TGRD is designated for buffer operation, this setting is invalid and the register operates as a buffer register.

TIER0—Timer Interrupt Enable Register 0 H'FFD4 TPU0

Bit :	7	6	5	4	3	2	1	0
	TTGE	—	—	TCIEV	TGIED	TGIEC	TGIEB	TGIEA
Initial value :	0	1	0	0	0	0	0	0
Read/Write :	R/W	—	—	R/W	R/W	R/W	R/W	R/W

TGR Interrupt Enable A

0	Interrupt requests (TGIA) by TGFA bit disabled
1	Interrupt requests (TGIA) by TGFA bit enabled

TGR Interrupt Enable B

0	Interrupt requests (TGIB) by TGFB bit disabled
1	Interrupt requests (TGIB) by TGFB bit enabled

TGR Interrupt Enable C

0	Interrupt requests (TGIC) by TGFC bit disabled
1	Interrupt requests (TGIC) by TGFC bit enabled

TGR Interrupt Enable D

0	Interrupt requests (TGID) by TGFD bit disabled
1	Interrupt requests (TGID) by TGFD bit enabled

Overflow Interrupt Enable

0	Interrupt requests (TCIV) by TCFV disabled
1	Interrupt requests (TCIV) by TCFV enabled

A/D Conversion Start Request Enable

0	A/D conversion start request generation disabled
1	A/D conversion start request generation enabled

TSR0—Timer Status Register 0 H'FFD5 TPU0

Bit :	7	6	5	4	3	2	1	0
	—	—	—	TCFV	TGFD	TGFC	TGFB	TGFA
Initial value :	1	1	0	0	0	0	0	0
Read/Write :	—	—	—	R/(W)*	R/(W)*	R/(W)*	R/(W)*	R/(W)*

Input Capture/Output Compare Flag A

0	[Clearing conditions] • When DTC is activated by TGIA interrupt while DISEL bit of MRB in DTC is 0 • When DMAC is activated by TGIA interrupt while DTA bit of DMABCR in DMAC is 1 • When 0 is written to TGFA after reading TGFA = 1
1	[Setting conditions] • When TCNT = TGRA while TGRA is functioning as output compare register • When TCNT value is transferred to TGRA by input capture signal while TGRA is functioning as input capture register

Input Capture/Output Compare Flag B

0	[Clearing conditions] • When DTC is activated by TGIB interrupt while DISEL bit of MRB in DTC is 0 • When 0 is written to TGFB after reading TGFB = 1
1	[Setting conditions] • When TCNT = TGRB while TGRB is functioning as output compare register • When TCNT value is transferred to TGRB by input capture signal while TGRB is functioning as input capture register

Input Capture/Output Compare Flag C

0	[Clearing conditions] • When DTC is activated by TGIC interrupt while DISEL bit of MRB in DTC is 0 • When 0 is written to TGFC after reading TGFC = 1
1	[Setting conditions] • When TCNT = TGRC while TGRC is functioning as output compare register • When TCNT value is transferred to TGRC by input capture signal while TGRC is functioning as input capture register

Input Capture/Output Compare Flag D

0	[Clearing conditions] • When DTC is activated by TGID interrupt while DISEL bit of MRB in DTC is 0 • When 0 is written to TGFD after reading TGFD = 1
1	[Setting conditions] • When TCNT = TGRD while TGRD is functioning as output compare register • When TCNT value is transferred to TGRD by input capture signal while TGRD is functioning as input capture register

Overflow Flag

0	[Clearing condition] When 0 is written to TCFV after reading TCFV = 1
1	[Setting condition] When the TCNT value overflows (changes from H'FFFF to H'0000)

Note: * Can only be written with 0 for flag clearing.

TCNT0—Timer Counter 0 **H'FFD6** **TPU0**

Bit :	15	14	13	12	11	10	9	8	7	6	5	4	3	2	1	0
Initial value :	0	0	0	0	0	0	0	0	0	0	0	0	0	0	0	0
Read/Write :	R/W	R/W	R/W	R/W	R/W	R/W	R/W	R/W	R/W	R/W	R/W	R/W	R/W	R/W	R/W	R/W

Up-counter

TGR0A—Timer General Register 0A **H'FFD8** **TPU0**
TGR0B—Timer General Register 0B **H'FFDA** **TPU0**
TGR0C—Timer General Register 0C **H'FFDC** **TPU0**
TGR0D—Timer General Register 0D **H'FFDE** **TPU0**

Bit :	15	14	13	12	11	10	9	8	7	6	5	4	3	2	1	0
Initial value :	1	1	1	1	1	1	1	1	1	1	1	1	1	1	1	1
Read/Write :	R/W	R/W	R/W	R/W	R/W	R/W	R/W	R/W	R/W	R/W	R/W	R/W	R/W	R/W	R/W	R/W

TCR1—Timer Control Register 1 H'FFE0 TPU1

Bit :	7	6	5	4	3	2	1	0
	—	CCLR1	CCLR0	CKEG1	CKEG0	TPSC2	TPSC1	TPSC0
Initial value :	0	0	0	0	0	0	0	0
Read/Write :	—	R/W	R/W	R/W	R/W	R/W	R/W	R/W

Time Prescaler

0	0	0	Internal clock: counts on ø/1
		1	Internal clock: counts on ø/4
	1	0	Internal clock: counts on ø/16
		1	Internal clock: counts on ø/64
1	0	0	External clock: counts on TCLKA pin input
		1	External clock: counts on TCLKB pin input
	1	0	Internal clock: counts on ø/256
		1	Counts on TCNT2 overflow/underflow

Note: This setting is ignored when channel 1 is in phase counting mode.

Clock Edge

0	0	Count at rising edge
	1	Count at falling edge
1	—*	Count at both edges

Note: * This setting is ignored when channel 1 is in phase counting mode.

Counter Clear

0	0	TCNT clearing disabled
	1	TCNT cleared by TGRA compare match/input capture
1	0	TCNT cleared by TGRB compare match/input capture
	1	TCNT cleared by counter clearing for another channel performing synchronous clearing/synchronous operation*

Note: * Synchronous operating setting is performed by setting the SYNC bit in TSYR to 1.

TMDR1—Timer Mode Register 1 **H'FFE1** **TPU1**

Bit :	7	6	5	4	3	2	1	0
	—	—	—	—	MD3	MD2	MD1	MD0
Initial value :	1	1	0	0	0	0	0	0
Read/Write :	—	—	—	—	R/W	R/W	R/W	R/W

Mode

0	0	0	0	Normal operation
			1	Reserved
		1	0	PWM mode 1
			1	PWM mode 2
	1	0	0	Phase counting mode 1
			1	Phase counting mode 2
		1	0	Phase counting mode 3
			1	Phase counting mode 4
1	×	×	×	—

×: Don't care

Note: MD3 is a reserved bit. In a write, it should always be written with 0.

TIOR1—Timer I/O Control Register 1 H'FFE2 TPU1

Bit :	7	6	5	4	3	2	1	0
	IOB3	IOB2	IOB1	IOB0	IOA3	IOA2	IOA1	IOA0
Initial value :	0	0	0	0	0	0	0	0
Read/Write :	R/W	R/W	R/W	R/W	R/W	R/W	R/W	R/W

TGR1A I/O Control

0	0	0	0	TGR1A is output compare register	Output disabled	
			1		Initial output is 0 output	0 output at compare match
		1	0			1 output at compare match
			1			Toggle output at compare match
	1	0	0		Output disabled	
			1		Initial output is 1 output	0 output at compare match
		1	0			1 output at compare match
			1			Toggle output at compare match
1	0	0	0	TGR1A is input capture register	Capture input source is TIOCA1 pin	Input capture at rising edge
			1			Input capture at falling edge
		1	×			Input capture at both edges
	1	×	×		Capture input source is TGR0A compare match/ input capture	Input capture at generation of channel 0/TGR0A compare match/ input capture

×: Don't care

TGR1B I/O Control

0	0	0	0	TGR1B is output compare register	Output disabled	
			1		Initial output is 0 output	0 output at compare match
		1	0			1 output at compare match
			1			Toggle output at compare match
	1	0	0		Output disabled	
			1		Initial output is 1 output	0 output at compare match
		1	0			1 output at compare match
			1			Toggle output at compare match
1	0	0	0	TGR1B is input capture register	Capture input source is TIOCB1 pin	Input capture at rising edge
			1			Input capture at falling edge
		1	×			Input capture at both edges
	1	×	×		Capture input source is TGR0C compare match/ input capture	Input capture at generation of TGR0B compare match/input capture

×: Don't care

TIER1—Timer Interrupt Enable Register 1 H'FFE4 TPU1

Bit :	7	6	5	4	3	2	1	0
	TTGE	—	TCIEU	TCIEV	—	—	TGIEB	TGIEA
Initial value :	0	1	0	0	0	0	0	0
Read/Write :	R/W	—	R/W	R/W	—	—	R/W	R/W

TGR Interrupt Enable A

0	Interrupt requests (TGIA) by TGFA bit disabled
1	Interrupt requests (TGIA) by TGFA bit enabled

TGR Interrupt Enable B

0	Interrupt requests (TGIB) by TGFB bit disabled
1	Interrupt requests (TGIB) by TGFB bit enabled

Overflow Interrupt Enable

0	Interrupt requests (TCIV) by TCFV disabled
1	Interrupt requests (TCIV) by TCFV enabled

Underflow Interrupt Enable

0	Interrupt requests (TCIU) by TCFU disabled
1	Interrupt requests (TCIU) by TCFU enabled

A/D Conversion Start Request Enable

0	A/D conversion start request generation disabled
1	A/D conversion start request generation enabled

TSR1—Timer Status Register 1 H'FFE5 TPU1

Bit	7	6	5	4	3	2	1	0
	TCFD	—	TCFU	TCFV	—	—	TGFB	TGFA
Initial value	1	1	0	0	0	0	0	0
Read/Write	R	—	R/(W)*	R/(W)*	—	—	R/(W)*	R/(W)*

Input Capture/Output Compare Flag A

0	[Clearing conditions] • When DTC is activated by TGIA interrupt while DISEL bit of MRB in DTC is 0 • When DMAC is activated by TGIA interrupt while DTA bit of DMABCR in DMAC is 1 • When 0 is written to TGFA after reading TGFA = 1
1	[Setting conditions] • When TCNT = TGRA while TGRA is functioning as output compare register • When TCNT value is transferred to TGRA by input capture signal while TGRA is functioning as input capture register

Input Capture/Output Compare Flag B

0	[Clearing conditions] • When DTC is activated by TGIB interrupt while DISEL bit of MRB in DTC is 0 • When 0 is written to TGFB after reading TGFB = 1
1	[Setting conditions] • When TCNT = TGRB while TGRB is functioning as output compare register • When TCNT value is transferred to TGRB by input capture signal while TGRB is functioning as input capture register

Overflow Flag

0	[Clearing condition] When 0 is written to TCFV after reading TCFV = 1
1	[Setting condition] When the TCNT value overflows (changes from H'FFFF to H'0000)

Underflow Flag

0	[Clearing condition] When 0 is written to TCFU after reading TCFU = 1
1	[Setting condition] When the TCNT value underflows (changes from H'0000 to H'FFFF)

Count Direction Flag

0	TCNT counts down
1	TCNT counts up

Note: * Can only be written with 0 for flag clearing.

TCNT1—Timer Counter 1 H'FFE6 TPU1

Bit	15	14	13	12	11	10	9	8	7	6	5	4	3	2	1	0
Initial value	0	0	0	0	0	0	0	0	0	0	0	0	0	0	0	0
Read/Write	R/W	R/W	R/W	R/W	R/W	R/W	R/W	R/W	R/W	R/W	R/W	R/W	R/W	R/W	R/W	R/W

Up/down-counter*

Note: * This timer counter can be used as an up/down-counter only in phase counting mode or when performing overflow/underflow counting on another channel. In other cases it functions as an up-counter.

TGR1A—Timer General Register 1A **H'FFE8** **TPU1**
TGR1B—Timer General Register 1B **H'FFEA** **TPU1**

Bit	15	14	13	12	11	10	9	8	7	6	5	4	3	2	1	0
Initial value	1	1	1	1	1	1	1	1	1	1	1	1	1	1	1	1
Read/Write	R/W	R/W	R/W	R/W	R/W	R/W	R/W	R/W	R/W	R/W	R/W	R/W	R/W	R/W	R/W	R/W

TCR2—Timer Control Register 2 **H'FFF0** **TPU2**

Bit	7	6	5	4	3	2	1	0
	—	CCLR1	CCLR0	CKEG1	CKEG0	TPSC2	TPSC1	TPSC0
Initial value	0	0	0	0	0	0	0	0
Read/Write	—	R/W	R/W	R/W	R/W	R/W	R/W	R/W

Time Prescaler

0	0	0	Internal clock: counts on ø/1
		1	Internal clock: counts on ø/4
	1	0	Internal clock: counts on ø/16
		1	Internal clock: counts on ø/64
1	0	0	External clock: counts on TCLKA pin input
		1	External clock: counts on TCLKB pin input
	1	0	External clock: counts on TCLKC pin input
		1	Internal clock: counts on ø/1024

Note: This setting is ignored when channel 2 is in phase counting mode.

Clock Edge

0	0	Count at rising edge
	1	Count at falling edge
1	—*	Count at both edges

Note: * This setting is ignored when channel 2 is in phase counting mode.

Counter Clear

0	0	TCNT clearing disabled
	1	TCNT cleared by TGRA compare match/input capture
1	0	TCNT cleared by TGRB compare match/input capture
	1	TCNT cleared by counter clearing for another channel performing synchronous clearing/synchronous operation*

Note: * Synchronous operating setting is performed by setting the SYNC bit TSYR to 1.

TMDR2—Timer Mode Register 2 **H'FFF1** **TPU2**

Bit :	7	6	5	4	3	2	1	0
	—	—	—	—	MD3	MD2	MD1	MD0
Initial value :	1	1	0	0	0	0	0	0
Read/Write :	—	—	—	—	R/W	R/W	R/W	R/W

Mode

0	0	0	0	Normal operation
			1	Reserved
		1	0	PWM mode 1
			1	PWM mode 2
	1	0	0	Phase counting mode 1
			1	Phase counting mode 2
		1	0	Phase counting mode 3
			1	Phase counting mode 4
1	×	×	×	—

×: Don't care

Note: MD3 is a reserved bit. In a write, it should always be written with 0.

TIOR2—Timer I/O Control Register 2 H'FFF2 TPU2

Bit :	7	6	5	4	3	2	1	0
	IOB3	IOB2	IOB1	IOB0	IOA3	IOA2	IOA1	IOA0
Initial value :	0	0	0	0	0	0	0	0
Read/Write :	R/W	R/W	R/W	R/W	R/W	R/W	R/W	R/W

TGR2A I/O Control

0	0	0	0	TGR2A is output compare register	Output disabled	
			1		Initial output is 0 output	0 output at compare match
		1	0			1 output at compare match
			1			Toggle output at compare match
	1	0	0		Output disabled	
			1		Initial output is 1 output	0 output at compare match
		1	0			1 output at compare match
			1			Toggle output at compare match
1	×	0	0	TGR2A is input capture register	Capture input source is TIOCA2 pin	Input capture at rising edge
			1			Input capture at falling edge
		1	×			Input capture at both edges

×: Don't care

TGR2B I/O Control

0	0	0	0	TGR2B is output compare register	Output disabled	
			1		Initial output is 0 output	0 output at compare match
		1	0			1 output at compare match
			1			Toggle output at compare match
	1	0	0		Output disabled	
			1		Initial output is 1 output	0 output at compare match
		1	0			1 output at compare match
			1			Toggle output at compare match
1	×	0	0	TGR2B is input capture register	Capture input source is TIOCB2 pin	Input capture at rising edge
			1			Input capture at falling edge
		1	×			Input capture at both edges

×: Don't care

TIER2—Timer Interrupt Enable Register 2 H'FFF4 TPU2

Bit :	7	6	5	4	3	2	1	0
	TTGE	—	TCIEU	TCIEV	—	—	TGIEB	TGIEA
Initial value :	0	1	0	0	0	0	0	0
Read/Write :	R/W	—	R/W	R/W	—	—	R/W	R/W

TGR Interrupt Enable A

0	Interrupt requests (TGIA) by TGFA bit disabled
1	Interrupt requests (TGIA) by TGFA bit enabled

TGR Interrupt Enable B

0	Interrupt requests (TGIB) by TGFB bit disabled
1	Interrupt requests (TGIB) by TGFB bit enabled

Overflow Interrupt Enable

0	Interrupt requests (TCIV) by TCFV disabled
1	Interrupt requests (TCIV) by TCFV enabled

Underflow Interrupt Enable

0	Interrupt requests (TCIU) by TCFU disabled
1	Interrupt requests (TCIU) by TCFU enabled

A/D Conversion Start Request Enable

0	A/D conversion start request generation disabled
1	A/D conversion start request generation enabled

TSR2—Timer Status Register 2 H'FFF5 TPU2

Bit	7	6	5	4	3	2	1	0
	TCFD	—	TCFU	TCFV	—	—	TGFB	TGFA
Initial value	1	1	0	0	0	0	0	0
Read/Write	R	—	R/(W)*	R/(W)*	—	—	R/(W)*	R/(W)*

Input Capture/Output Compare Flag A

0	[Clearing conditions] • When DTC is activated by TGIA interrupt while DISEL bit of MRB in DTC is 0 • When DMAC is activated by TGIA interrupt while DTA bit of DMABCR in DMAC is 1 • When 0 is written to TGFA after reading TGFA = 1
1	[Setting conditions] • When TCNT = TGRA while TGRA is functioning as output compare register • When TCNT value is transferred to TGRA by input capture signal while TGRA is functioning as input capture register

Input Capture/Output Compare Flag B

0	[Clearing conditions] • When DTC is activated by TGIB interrupt while DISEL bit of MRB in DTC is 0 • When 0 is written to TGFB after reading TGFB = 1
1	[Setting conditions] • When TCNT = TGRB while TGRB is functioning as output compare register • When TCNT value is transferred to TGRB by input capture signal while TGRB is functioning as input capture register

Overflow Flag

0	[Clearing condition] When 0 is written to TCFV after reading TCFV = 1
1	[Setting condition] When the TCNT value overflows (changes from H'FFFF to H'0000)

Underflow Flag

0	[Clearing condition] When 0 is written to TCFU after reading TCFU = 1
1	[Setting condition] When the TCNT value underflows (changes from H'0000 to H'FFFF)

Count Direction Flag

0	TCNT counts down
1	TCNT counts up

Note: * Can only be written with 0 for flag clearing.

TCNT2—Timer Counter 2 **H'FFF6** **TPU2**

Bit :	15	14	13	12	11	10	9	8	7	6	5	4	3	2	1	0
Initial value :	0	0	0	0	0	0	0	0	0	0	0	0	0	0	0	0
Read/Write :	R/W	R/W	R/W	R/W	R/W	R/W	R/W	R/W	R/W	R/W	R/W	R/W	R/W	R/W	R/W	R/W

Up/down-counter*

Note: * This timer counter can be used as an up/down-counter only in phase counting mode or when performing overflow/underflow counting on another channel. In other cases it functions as an up-counter.

TGR2A—Timer General Register 2A **H'FFF8** **TPU2**
TGR2B—Timer General Register 2B **H'FFFA** **TPU2**

Bit :	15	14	13	12	11	10	9	8	7	6	5	4	3	2	1	0
Initial value :	1	1	1	1	1	1	1	1	1	1	1	1	1	1	1	1
Read/Write :	R/W	R/W	R/W	R/W	R/W	R/W	R/W	R/W	R/W	R/W	R/W	R/W	R/W	R/W	R/W	R/W

Appendix C I/O Port Block Diagrams

C.1 Port 1 Block Diagram

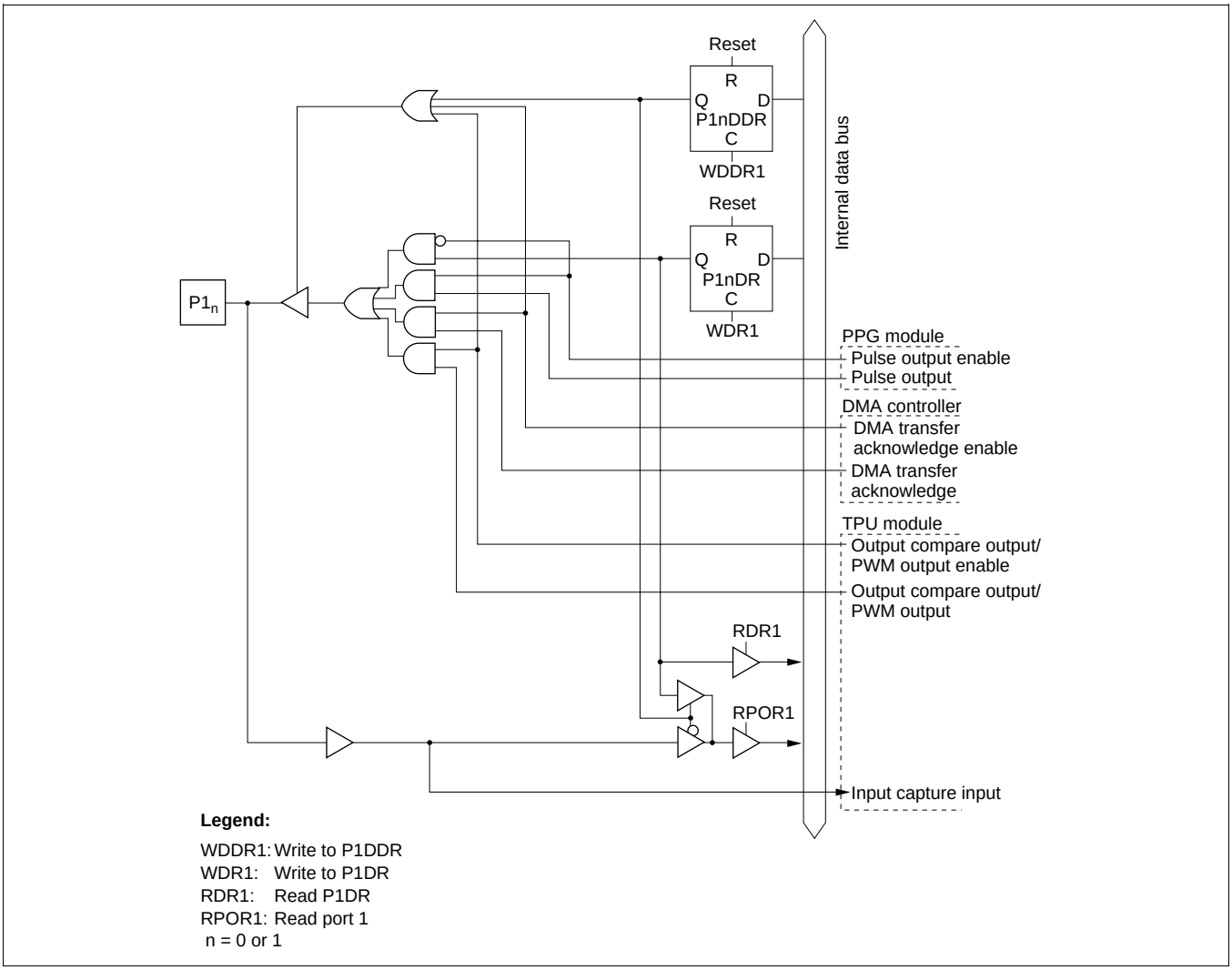

Figure C-1 (a) Port 1 Block Diagram (Pins $P1_0$ and $P1_1$)

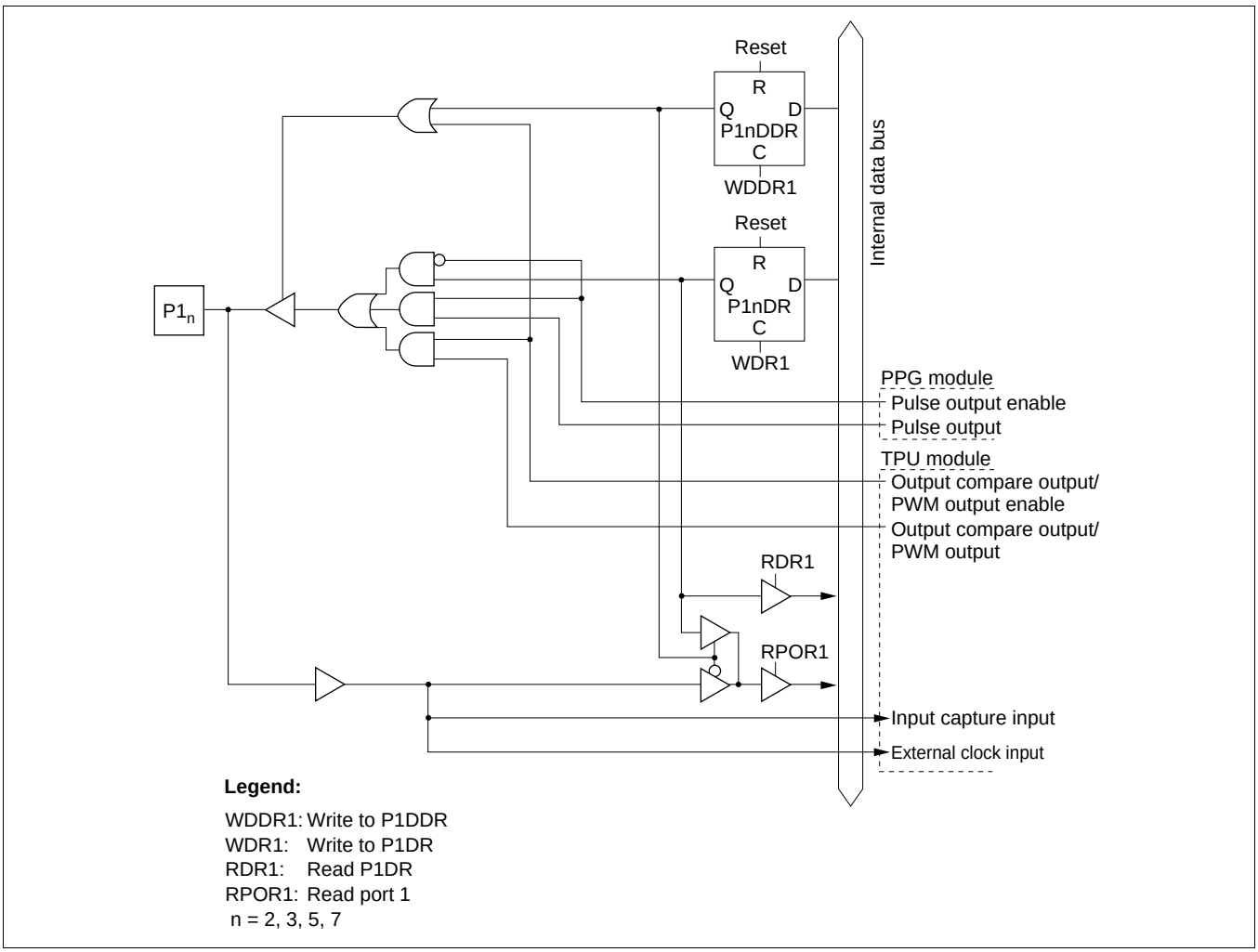

Figure C-1 (b) Port 1 Block Diagram (Pins $P1_2$, $P1_3$, $P1_5$, and $P1_7$)

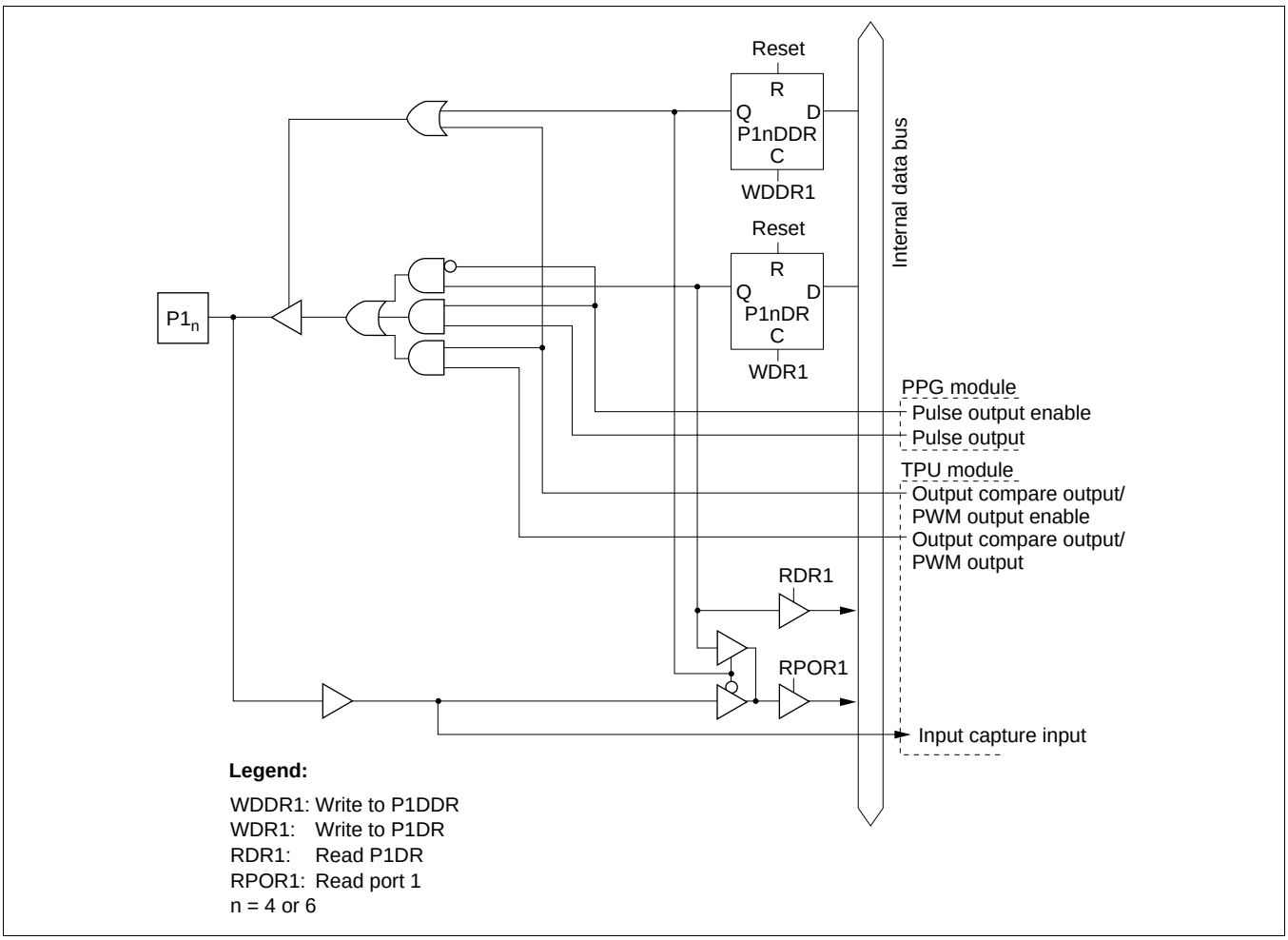

Figure C-1 (c) Port 1 Block Diagram (Pins $P1_4$ and $P1_6$)

C.2 Port 2 Block Diagram

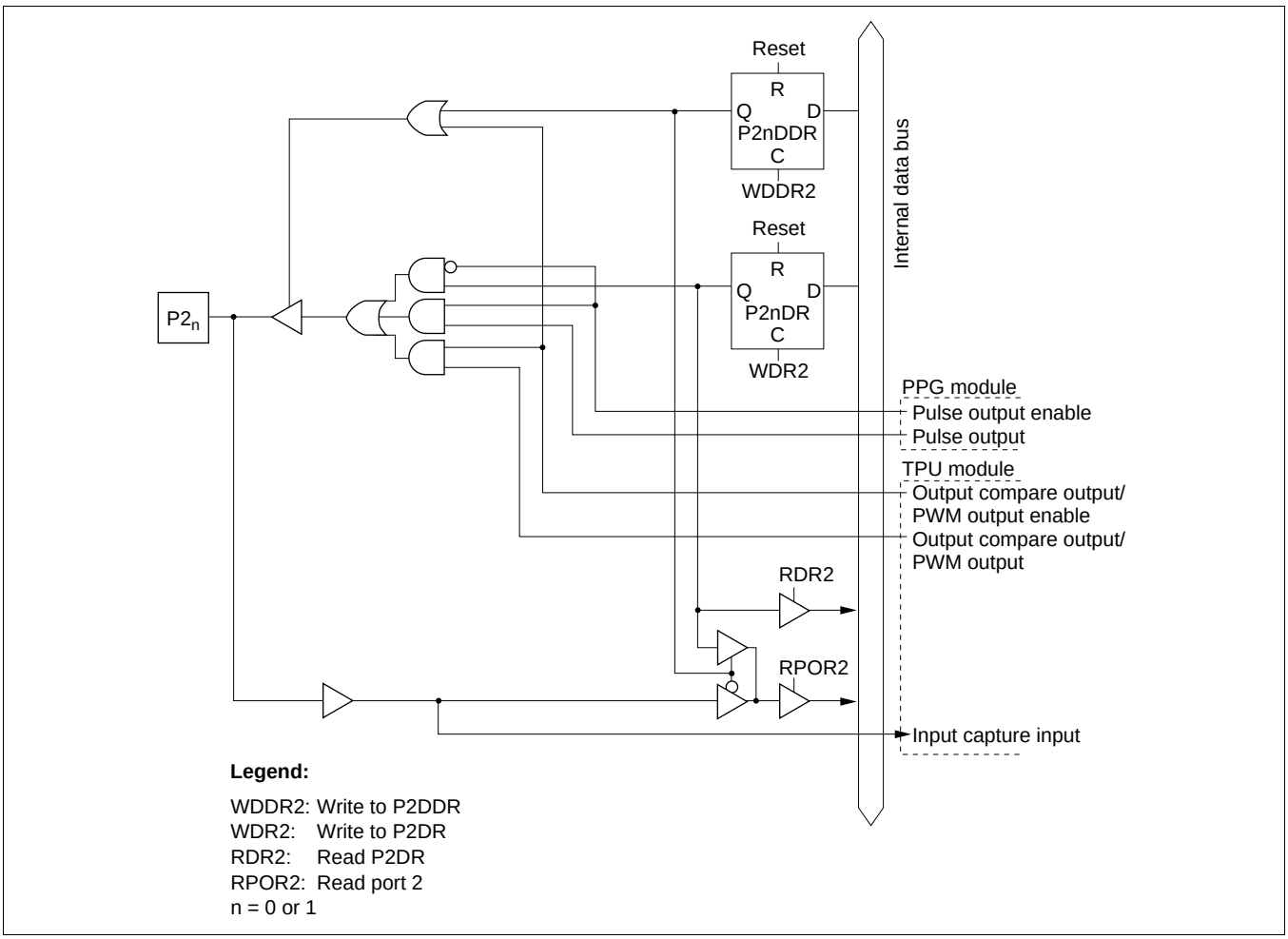

Figure C-2 (a) Port 2 Block Diagram (Pins $P2_0$ and $P2_1$)

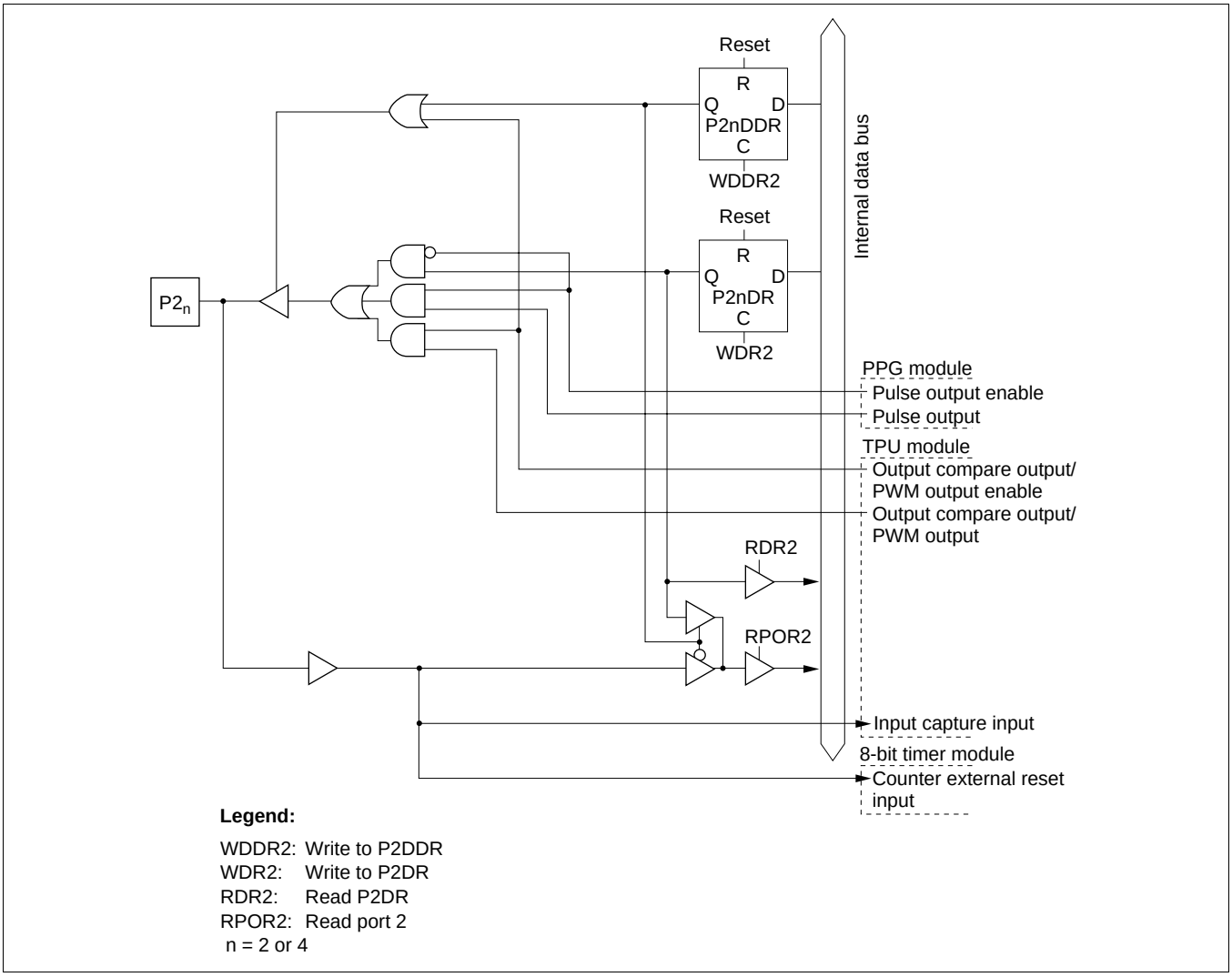

Figure C-2 (b) Port 2 Block Diagram (Pins $P2_2$ and $P2_4$)

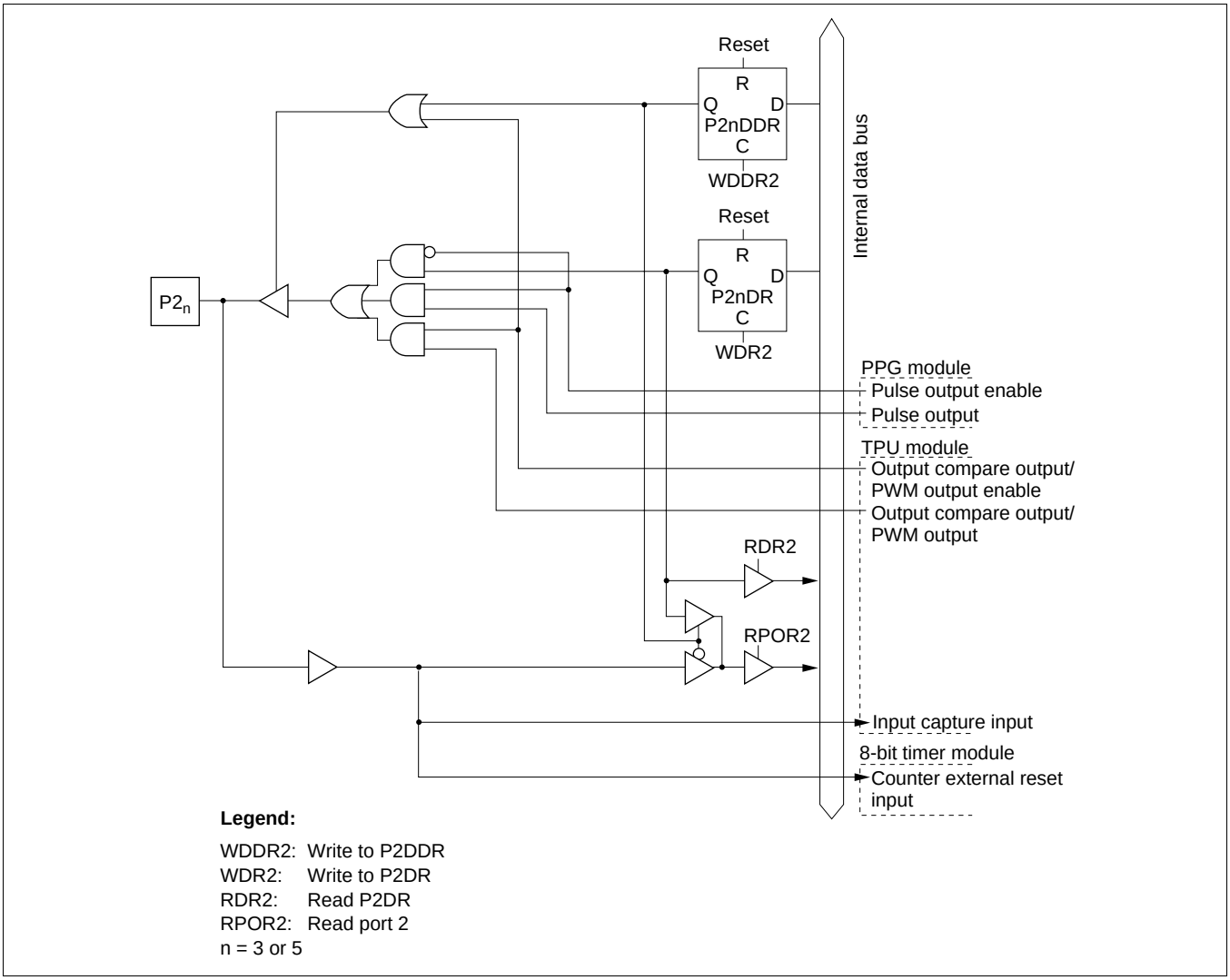

Figure C-2 (c) Port 2 Block Diagram (Pins $P2_3$ and $P2_5$)

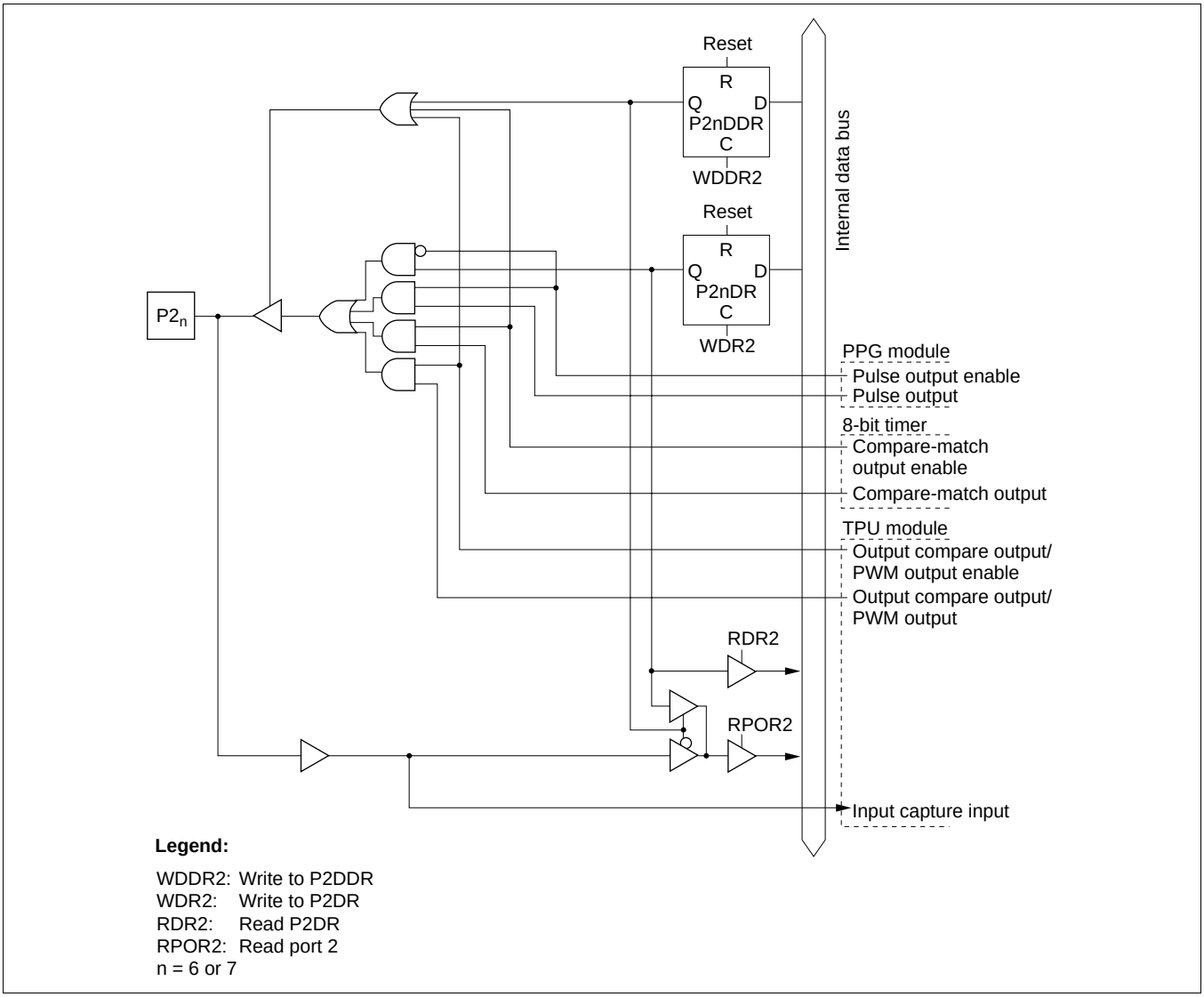

Figure C-2 (d) Port 2 Block Diagram (Pins $P2_6$ and $P2_7$)

C.3 Port 3 Block Diagram

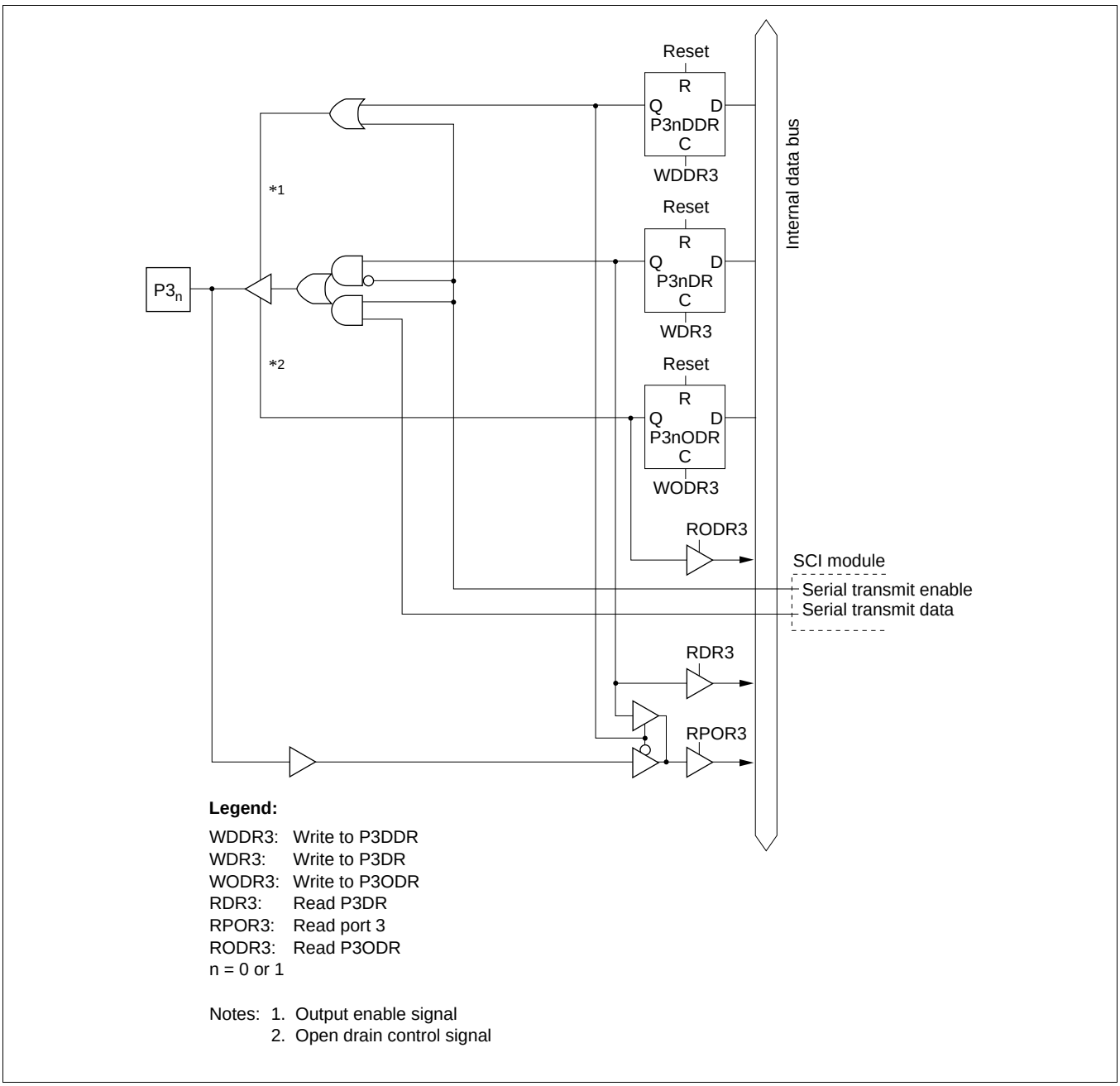

Figure C-3 (a) Port 3 Block Diagram (Pins $P3_0$ and $P3_1$)

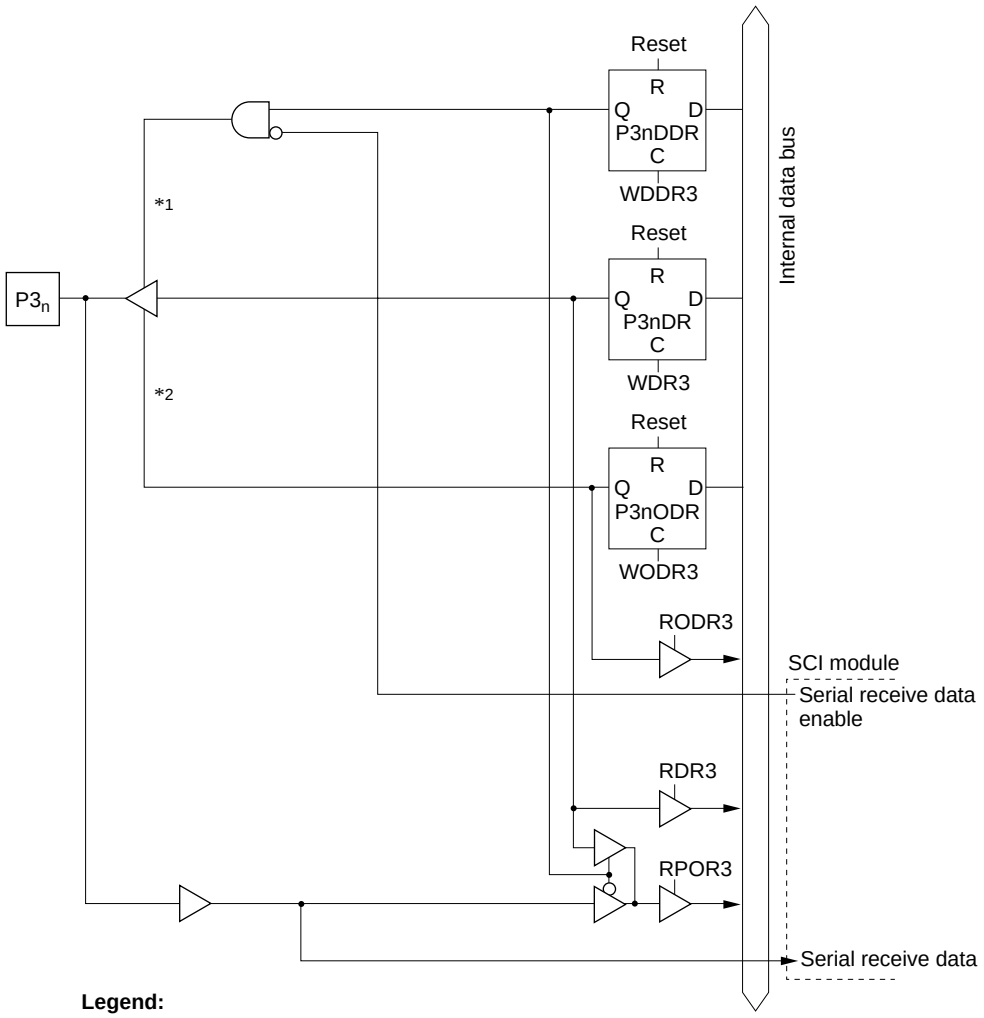

Legend:

WDDR3:	Write to P3DDR
WDR3:	Write to P3DR
WODR3:	Write to P3ODR
RDR3:	Read P3DR
RPOR3:	Read port 3
RODR3:	Read P3ODR

n = 2 or 3

Notes: 1. Output enable signal
2. Open drain control signal

Figure C-3 (b) Port 3 Block Diagram (Pins $P3_2$ and $P3_3$)

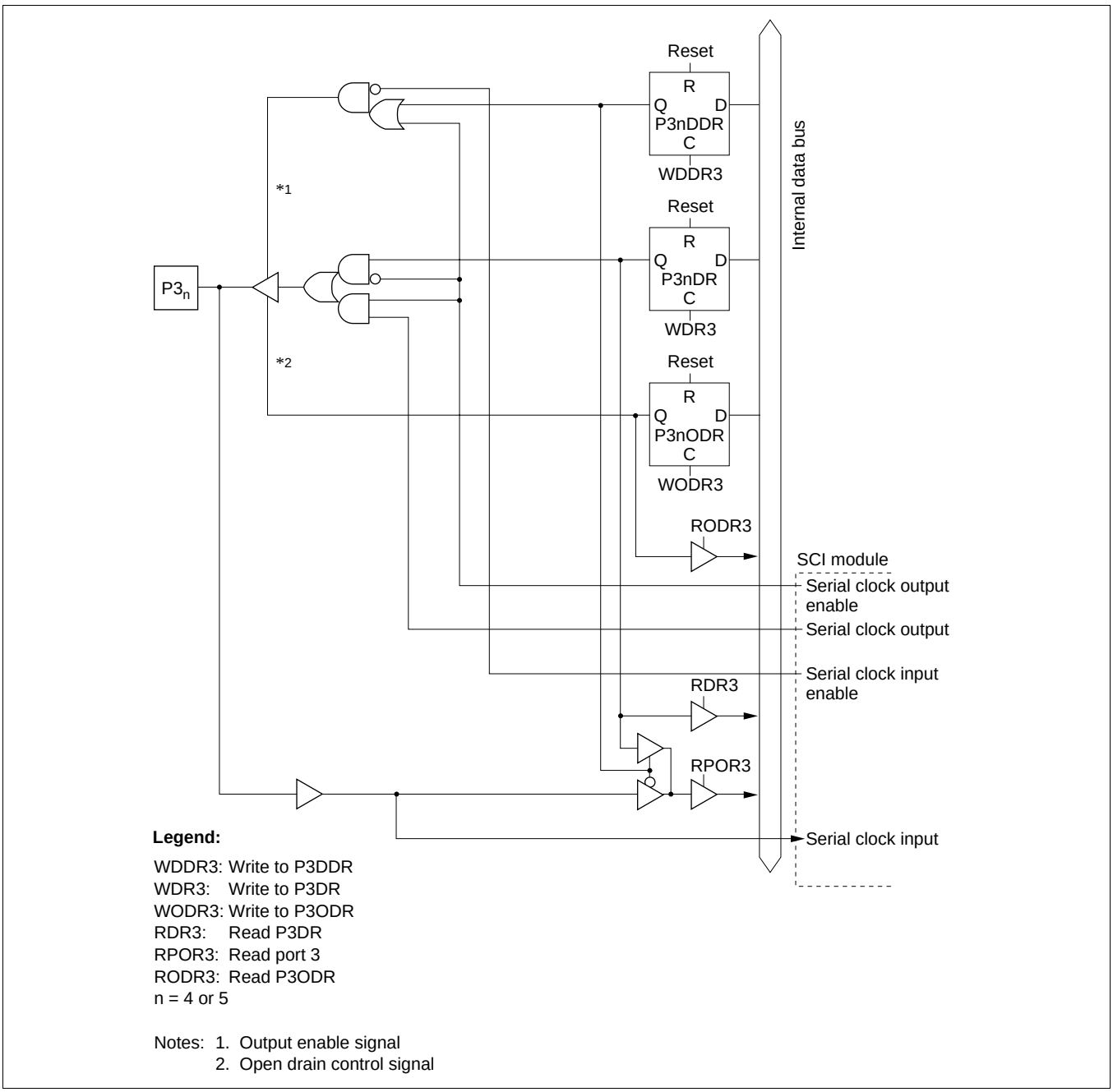

Figure C-3 (c) Port 3 Block Diagram (Pins $P3_4$ and $P3_5$)

C.4 Port 4 Block Diagram

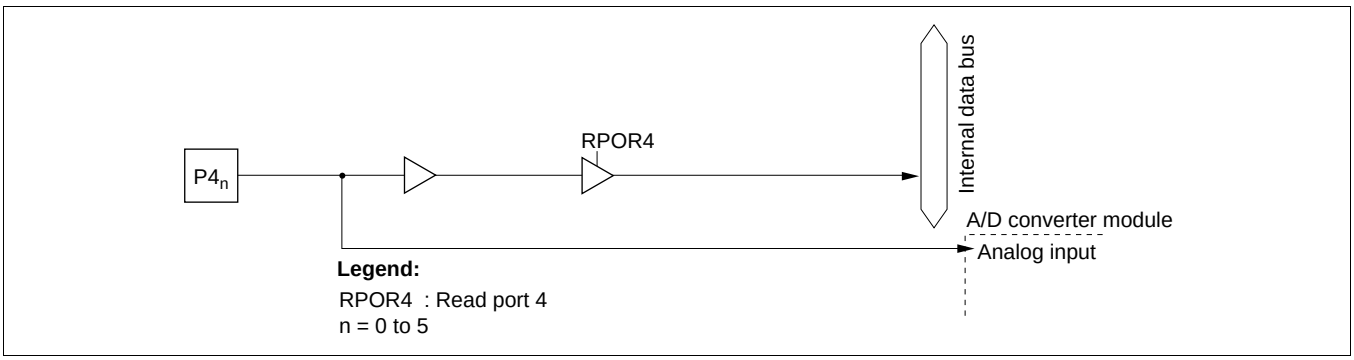

Figure C-4 (a) Port 4 Block Diagram (Pins $P4_0$ to $P4_5$)

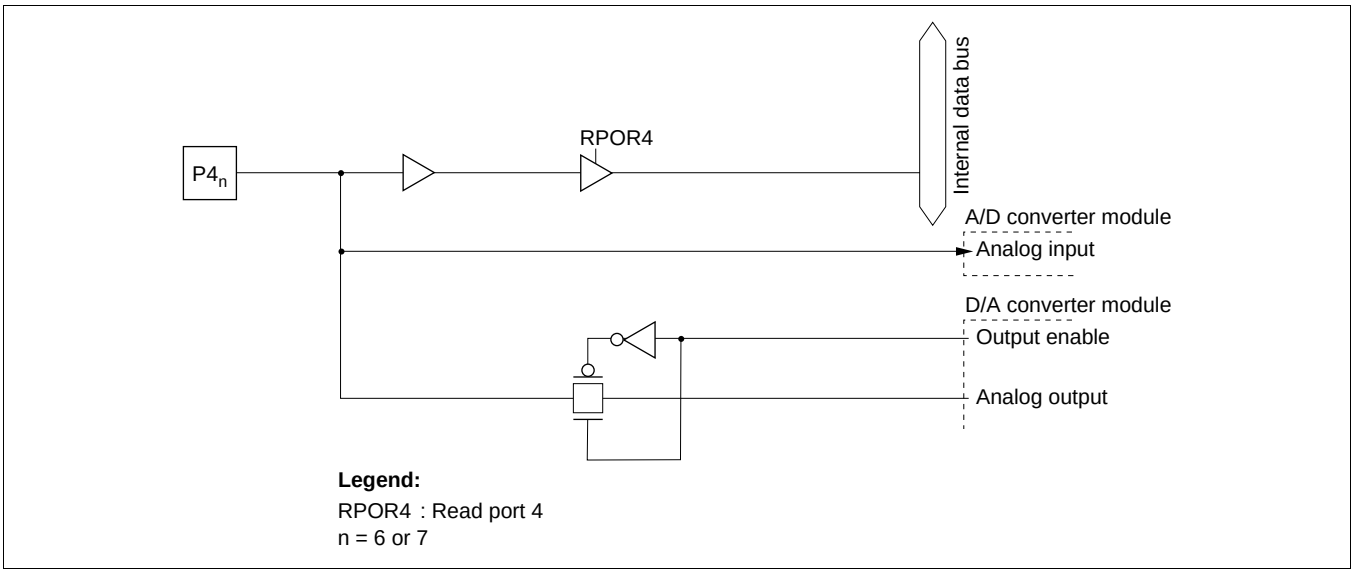

Figure C-4 (b) Port 4 Block Diagram (Pins $P4_6$ and $P4_7$)

C.5 Port 5 Block Diagram

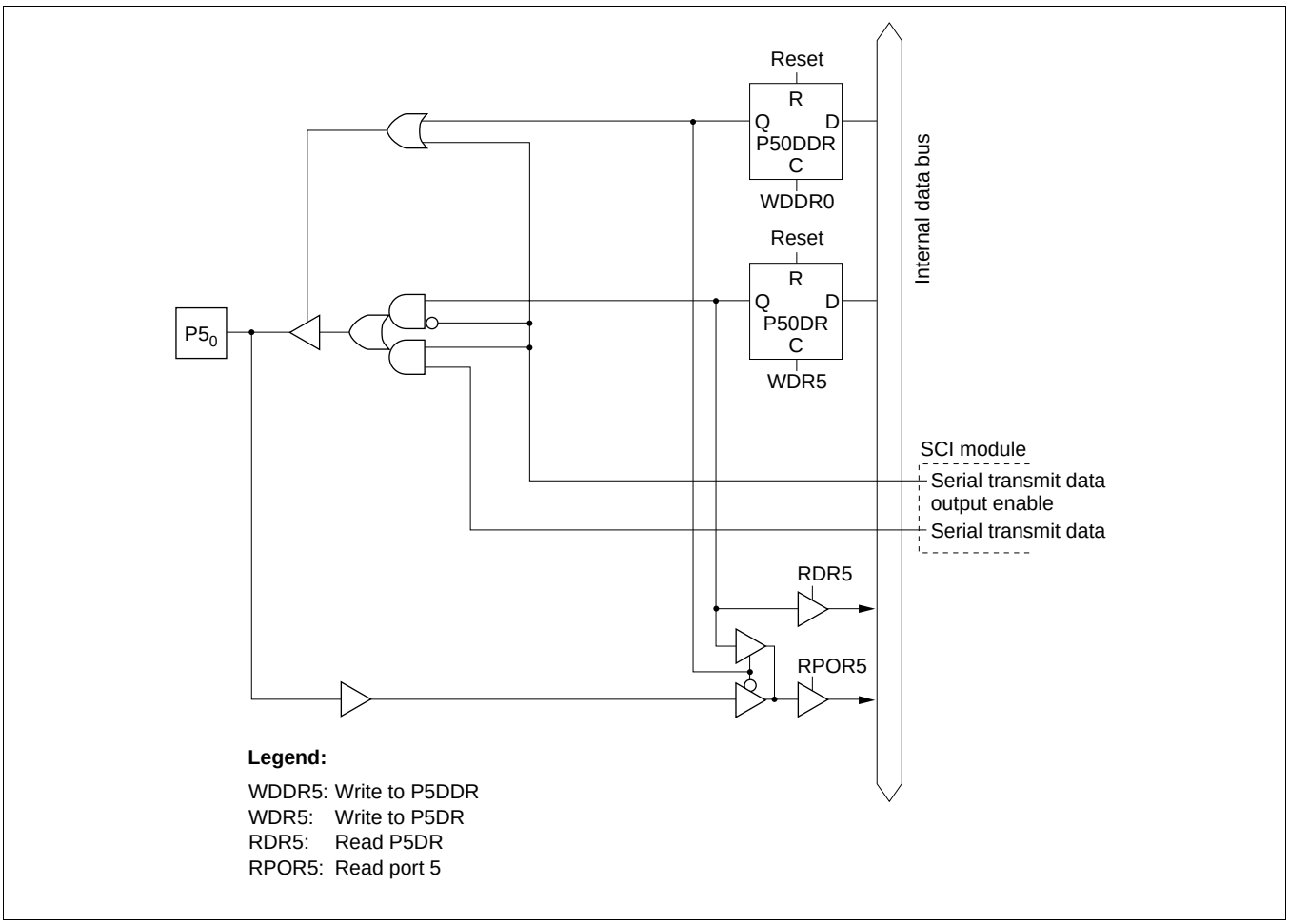

Figure C-5 (a) Port 5 Block Diagram (Pin $P5_0$)

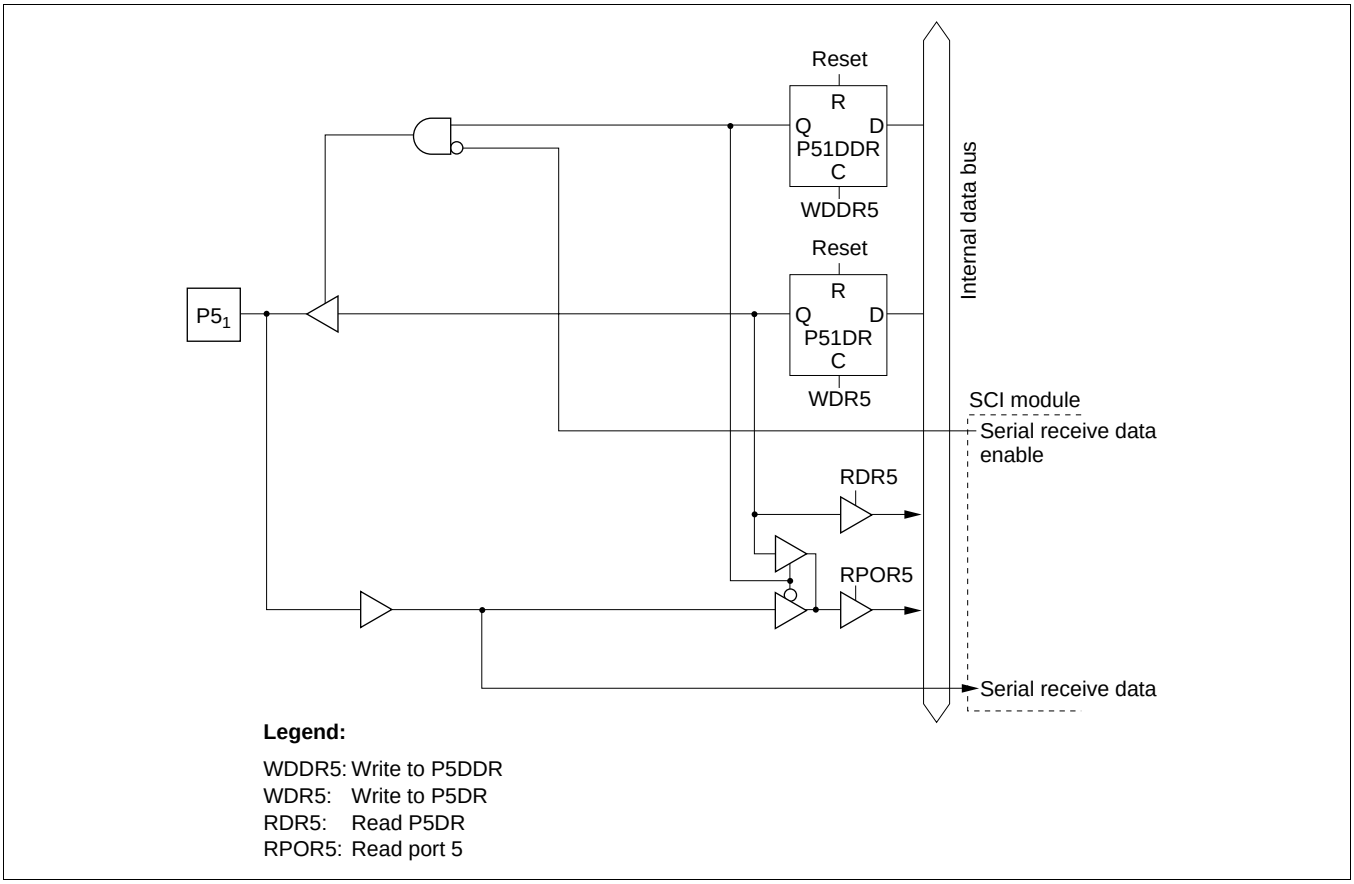

Figure C-5 (b) Port 5 Block Diagram (Pin $P5_1$)

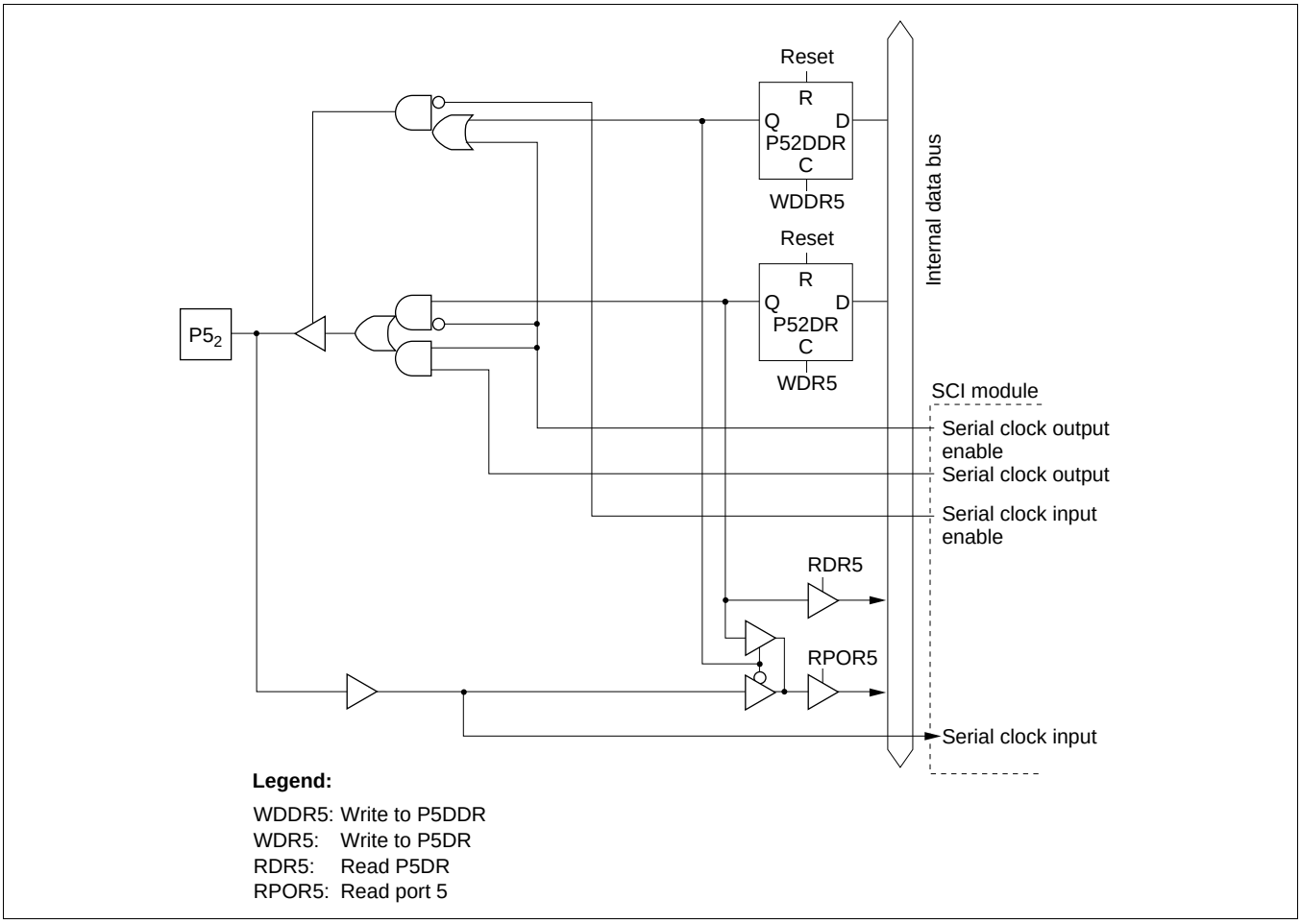

Figure C-5 (c) Port 5 Block Diagram (Pin $P5_2$)

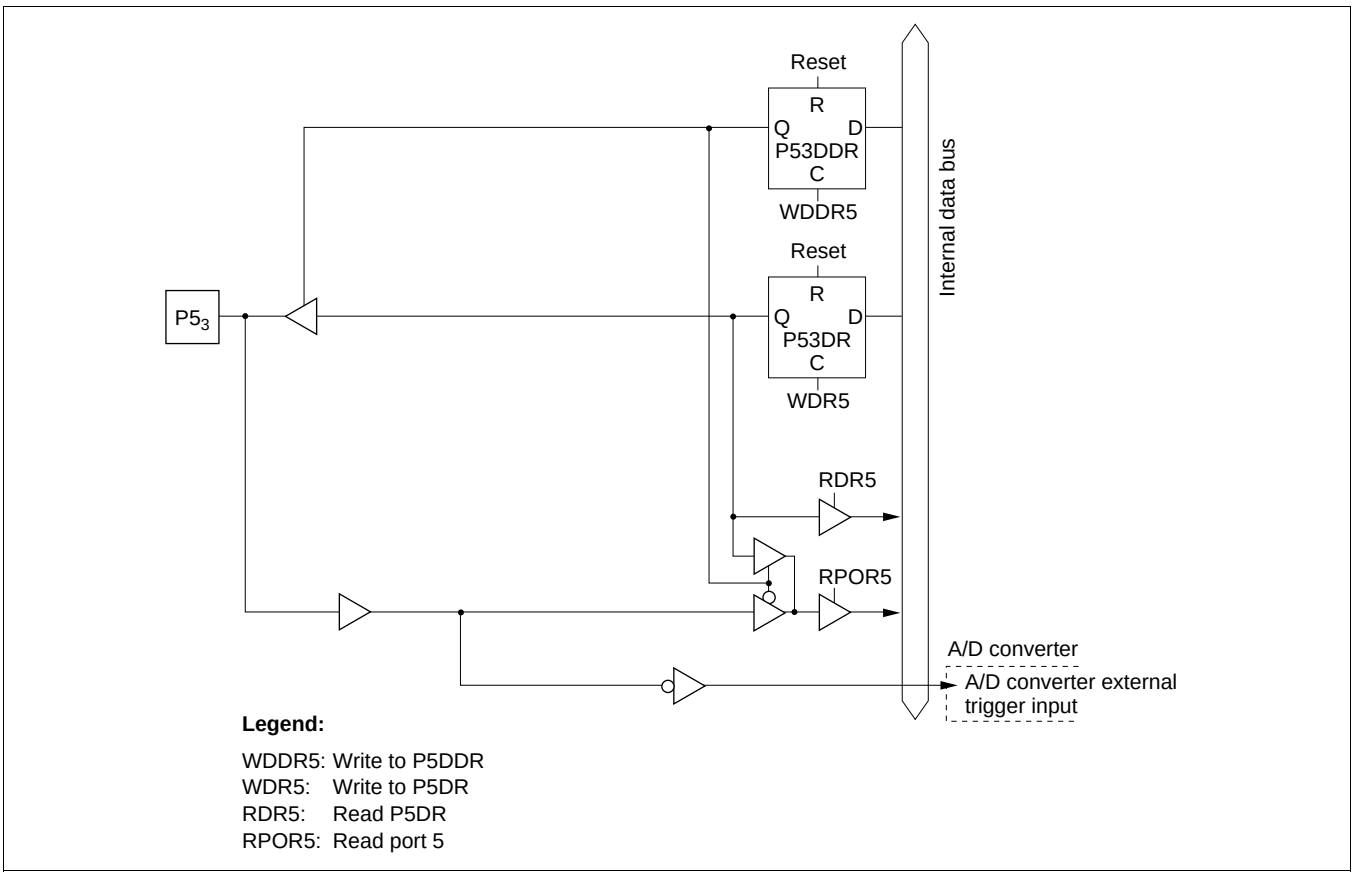

Figure C-5 (d) Port 5 Block Diagram (Pin P5$_3$)

C.6 Port 6 Block Diagram

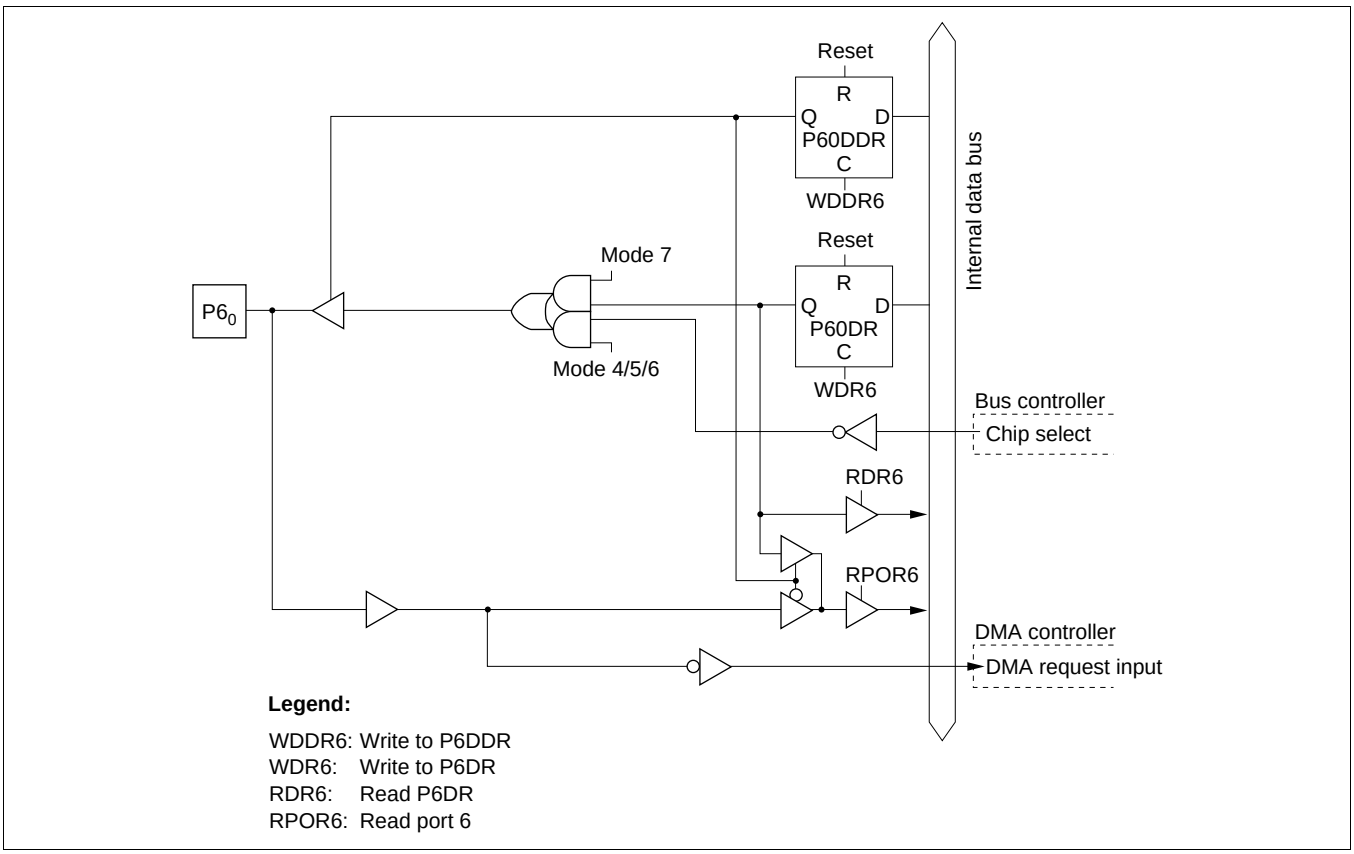

Figure C-6 (a) Port 6 Block Diagram (Pin P6$_0$)

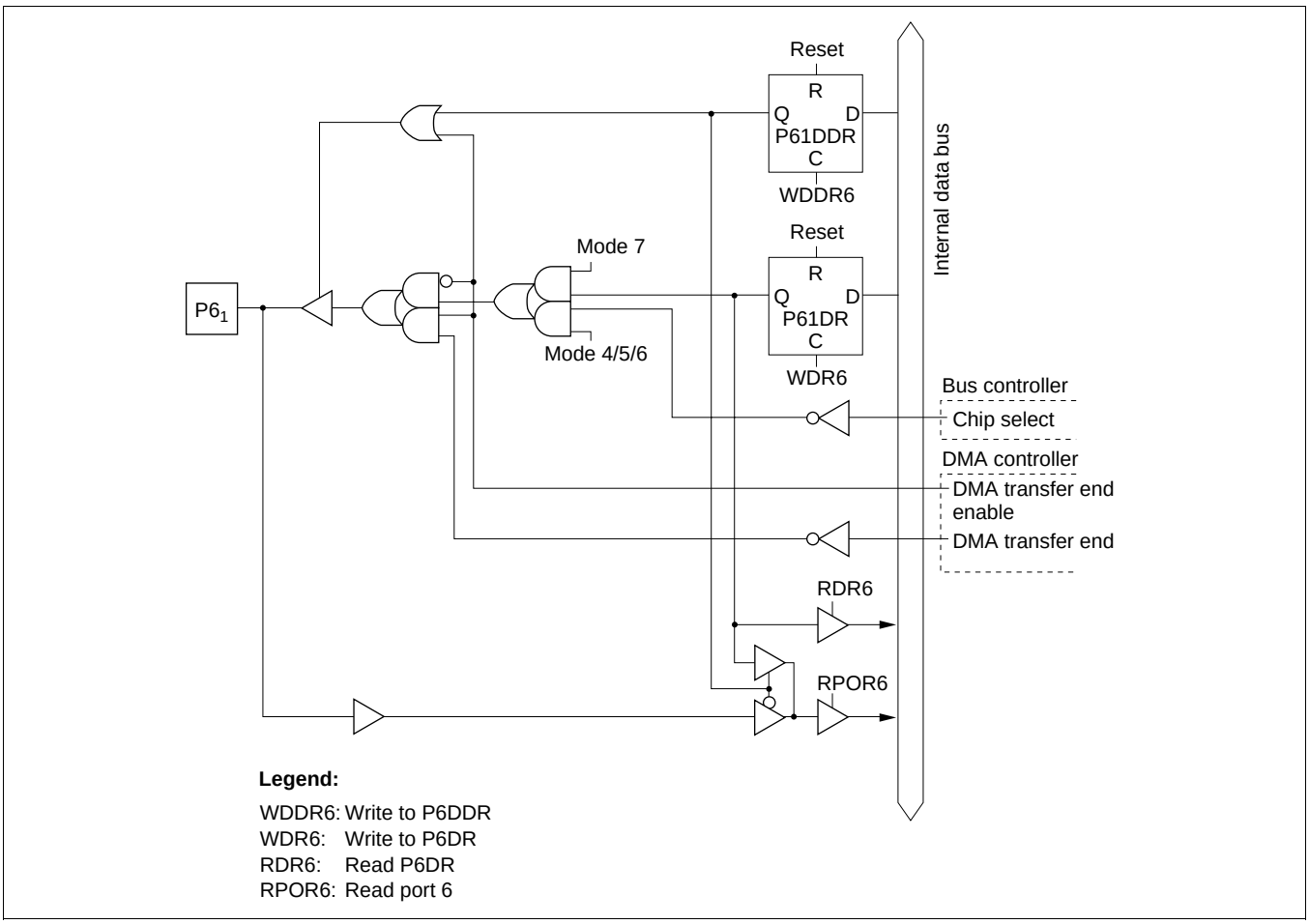

Figure C-6 (b) Port 6 Block Diagram (Pin P6$_1$)

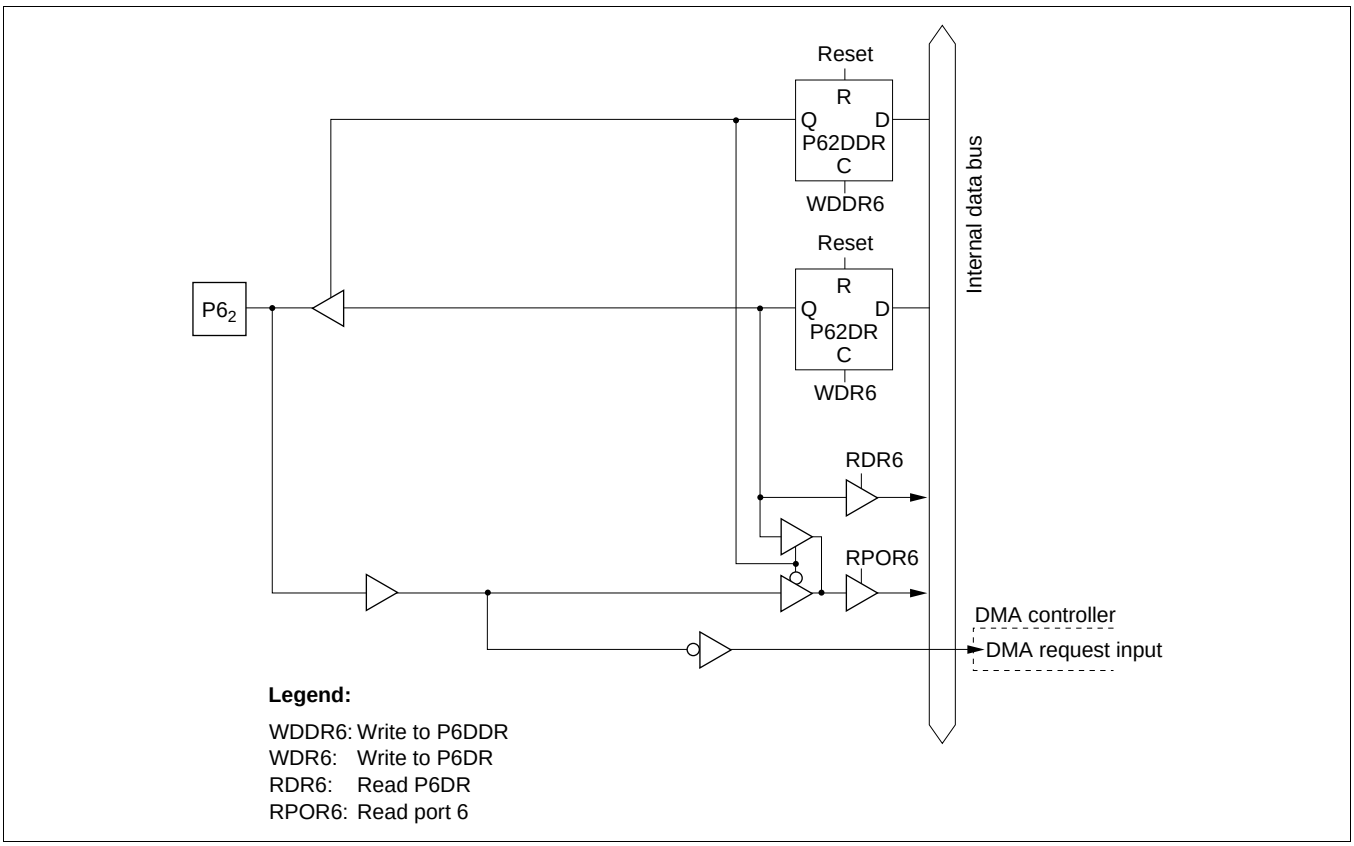

Figure C-6 (c) Port 6 Block Diagram (Pin P6$_2$)

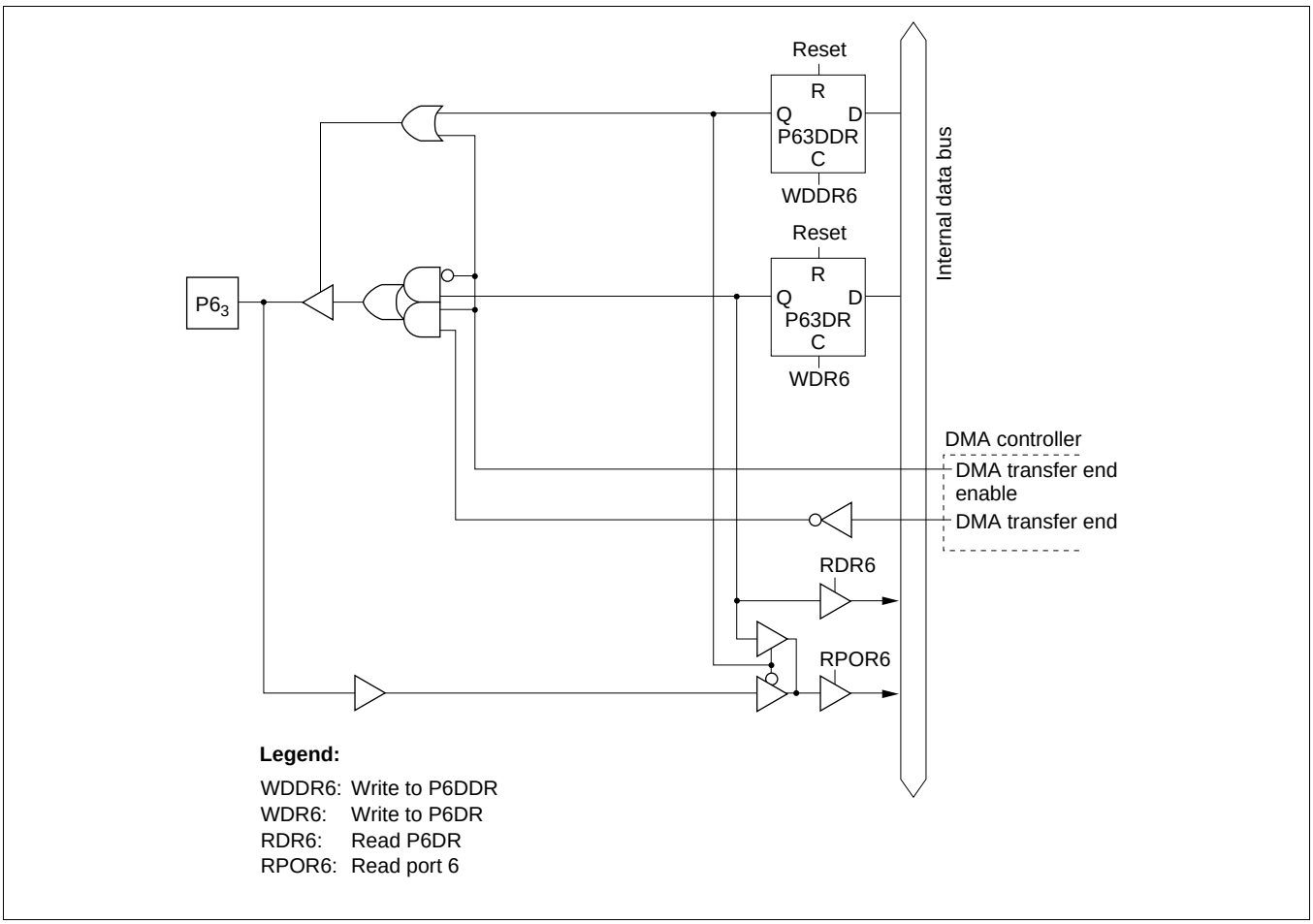

Figure C-6 (d) Port 6 Block Diagram (Pin P6$_3$)

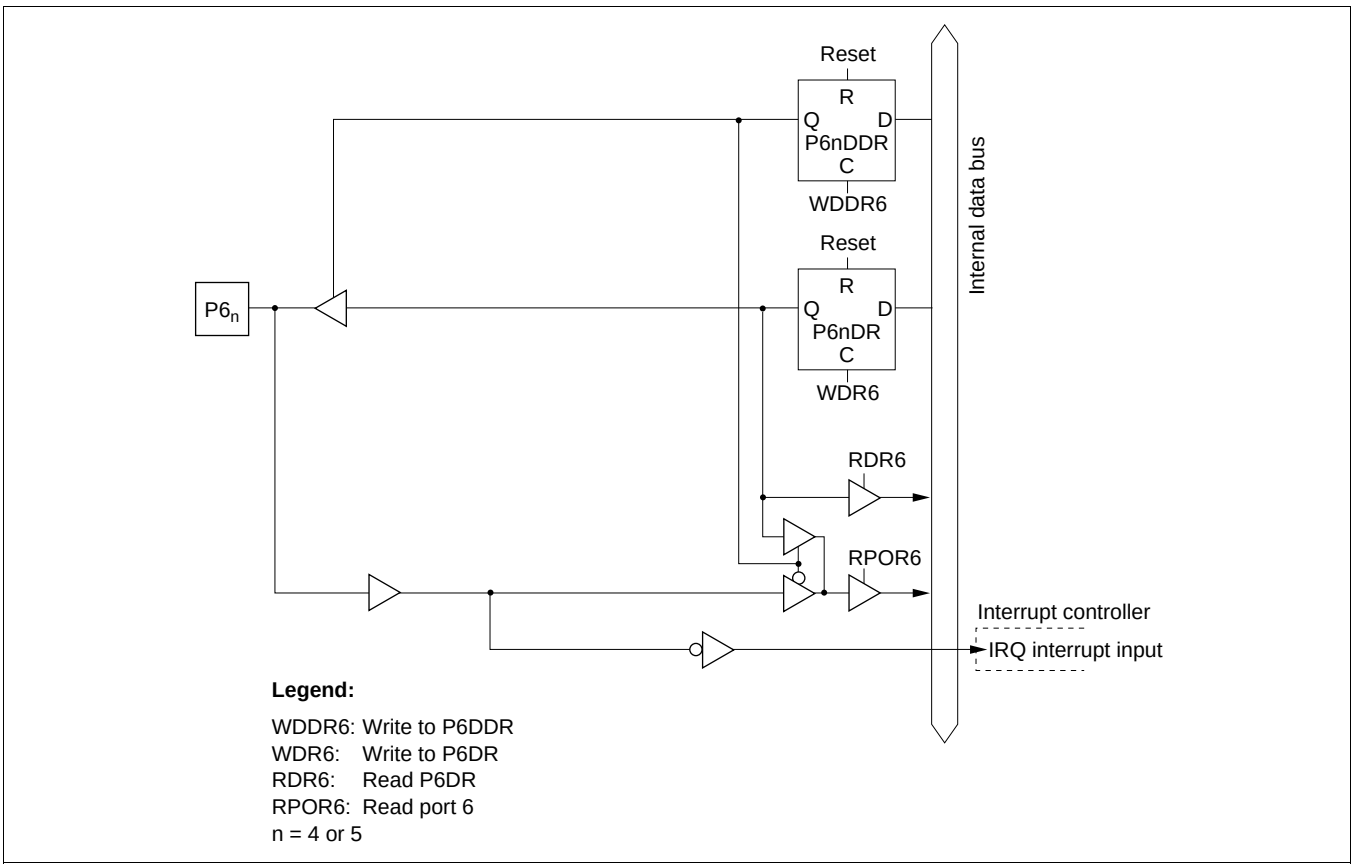

Figure C-6 (e) Port 6 Block Diagram (Pins $P6_4$ and $P6_5$)

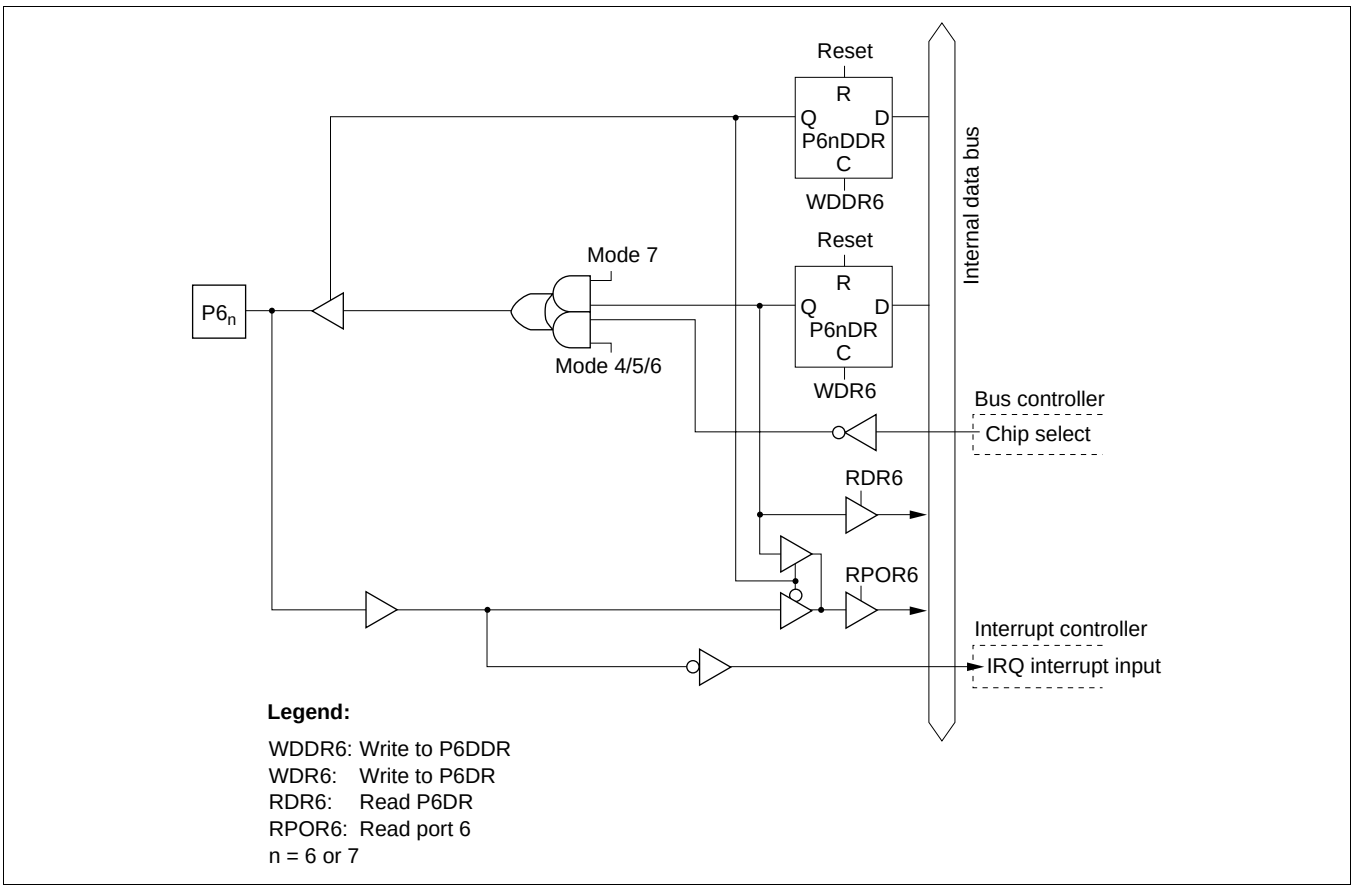

Figure C-6 (f) Port 6 Block Diagram (Pins $P6_6$ and $P6_7$)

C.7 Port A Block Diagram

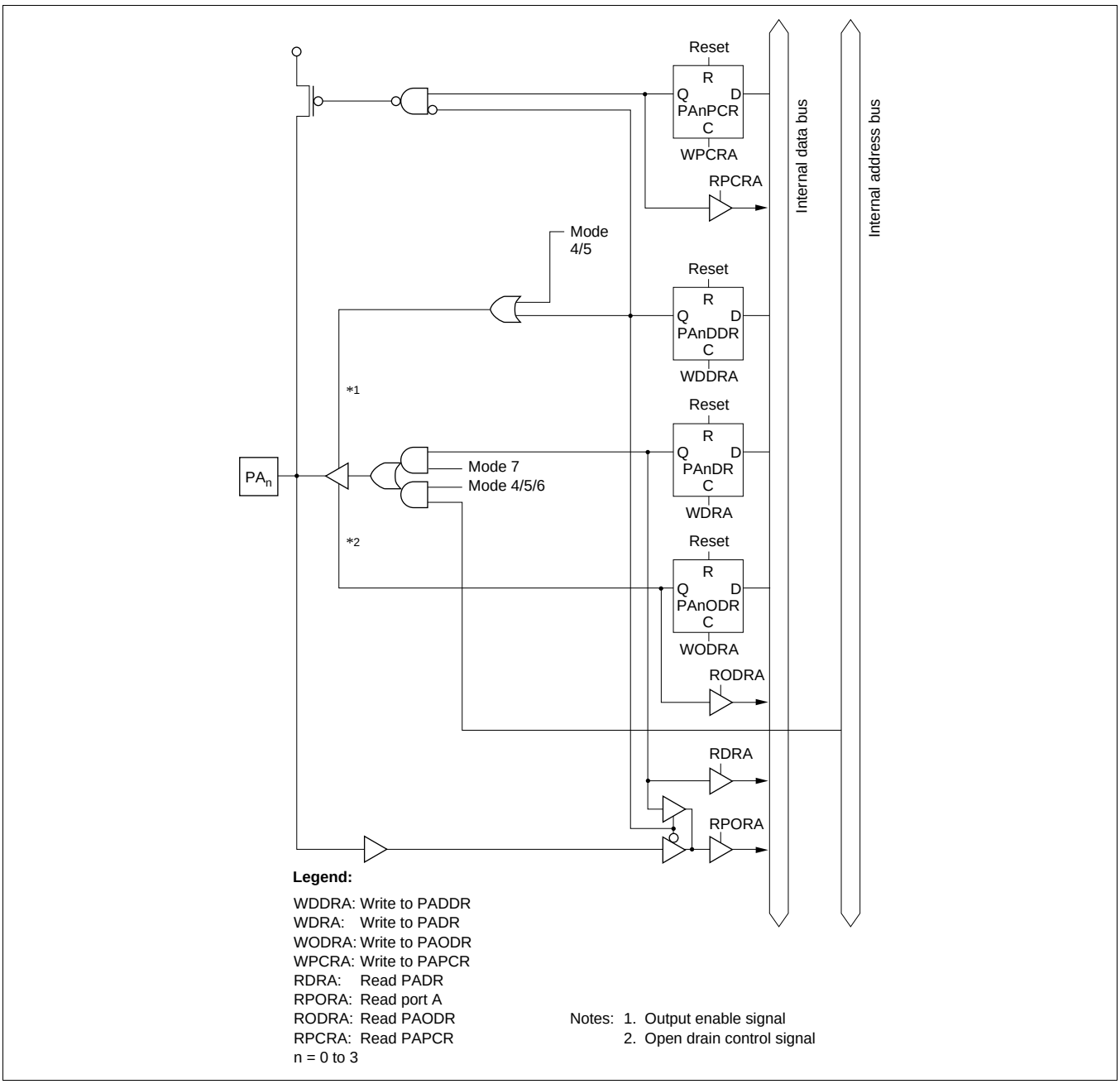

Figure C-7 (a) Port A Block Diagram (Pins PA_0 to PA_3)

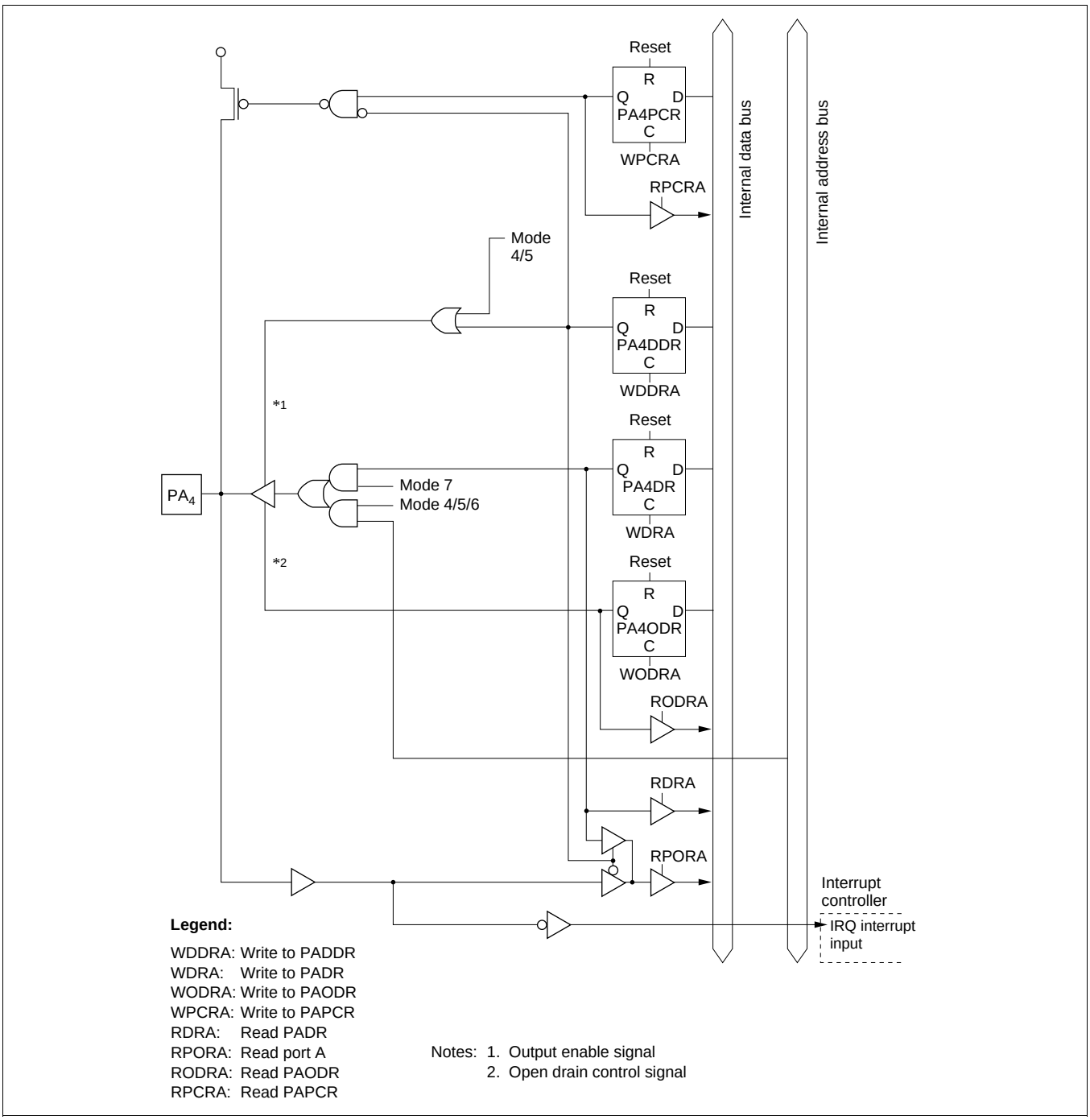

Figure C-7 (b) Port A Block Diagram (Pin PA_4)

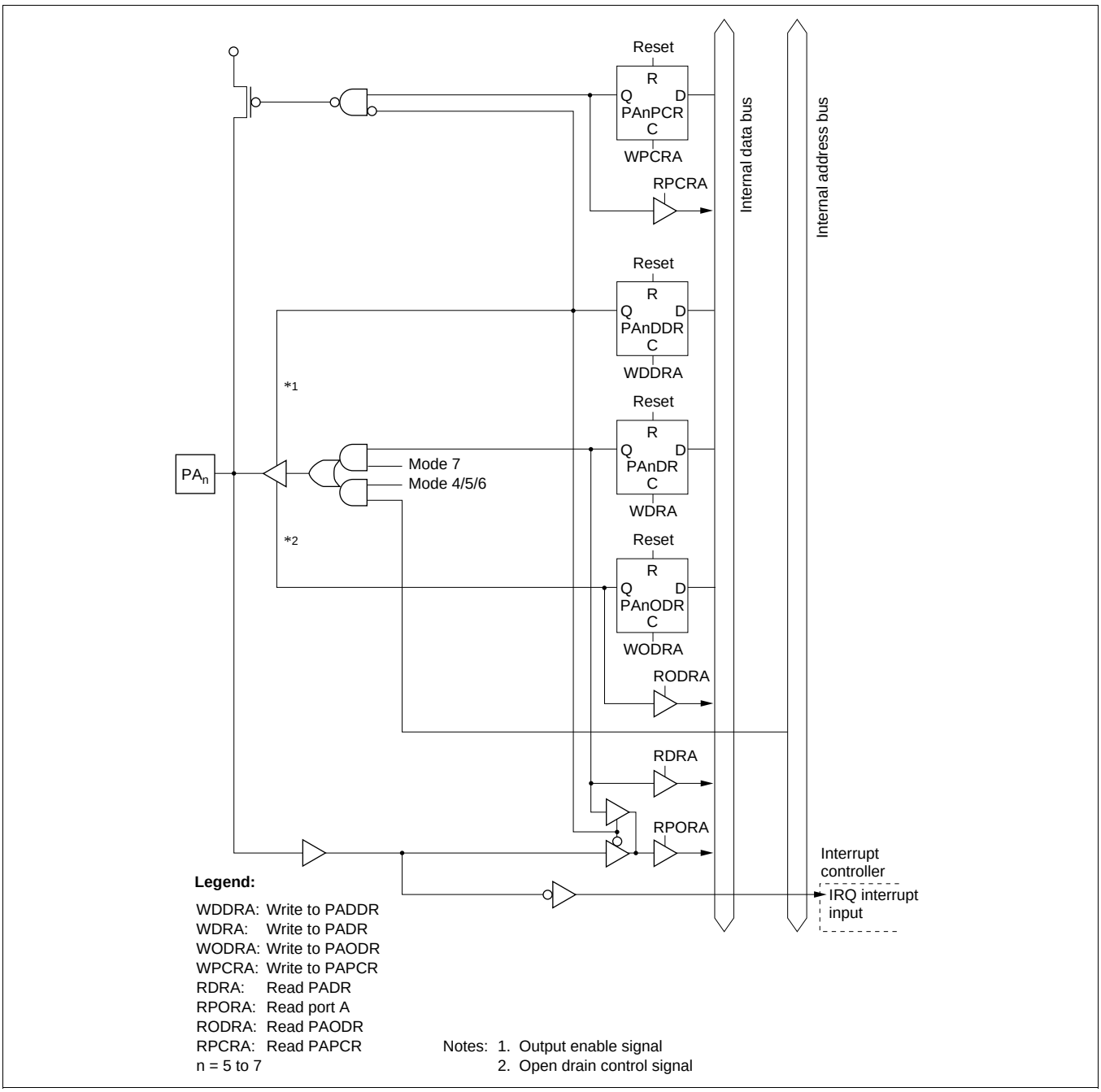

Figure C-7 (c) Port A Block Diagram (Pins PA_5 to PA_7)

C.8 Port B Block Diagram

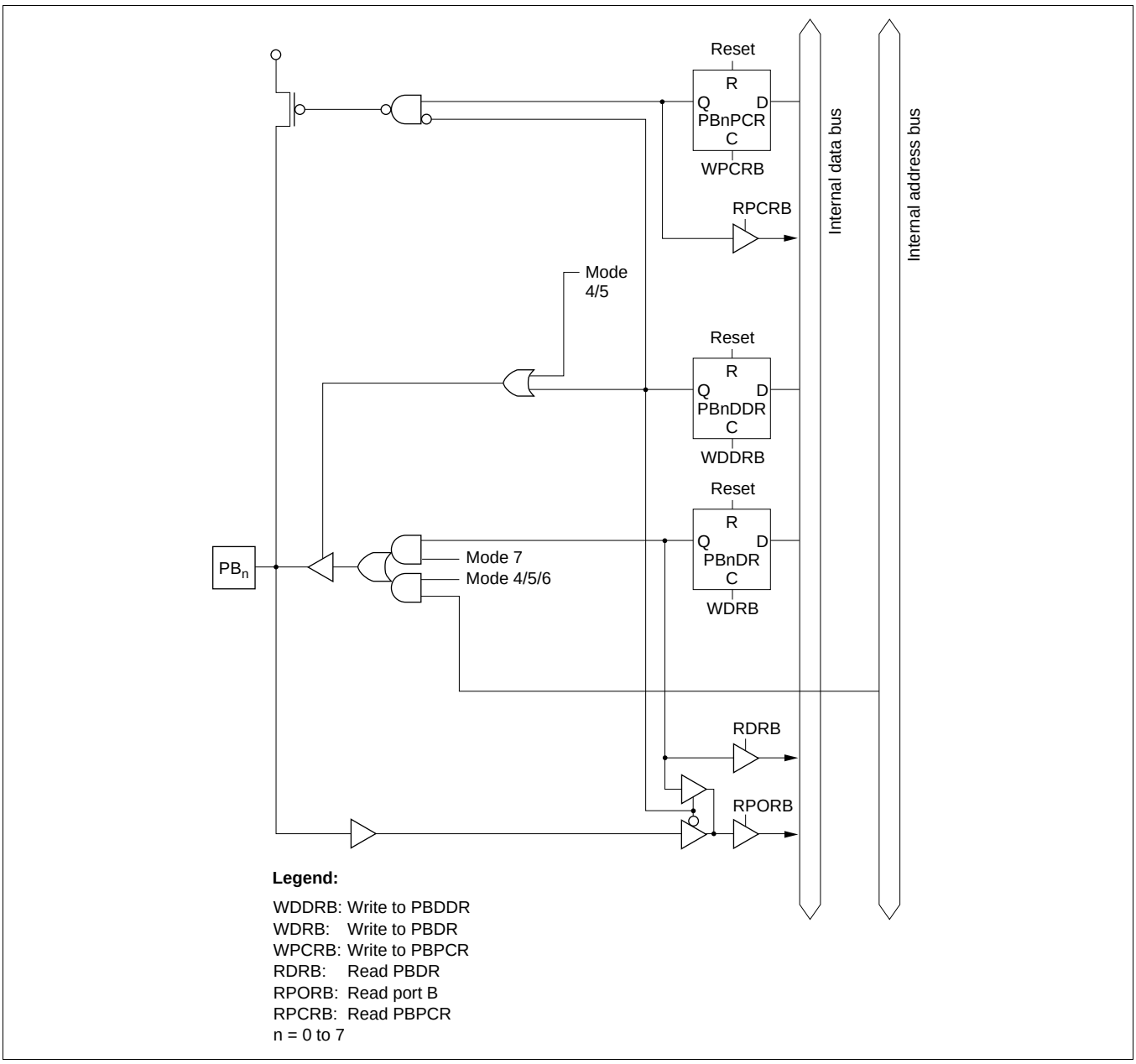

Figure C-8 Port B Block Diagram (Pin PB_0 to PB_7)

C.9 Port C Block Diagram

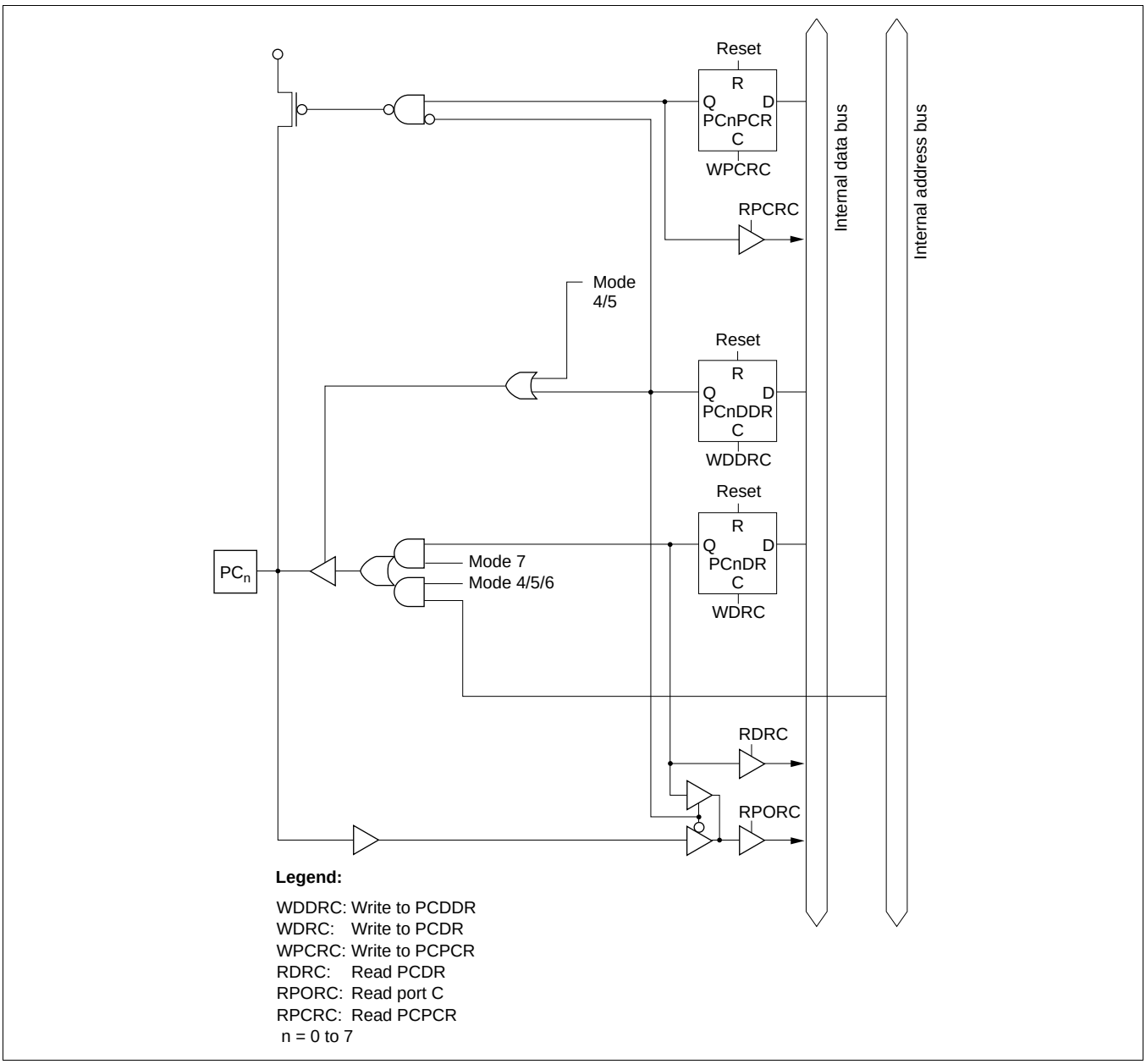

Figure C-9 Port C Block Diagram (Pin PC_0 to PC_7)

C.10 Port D Block Diagram

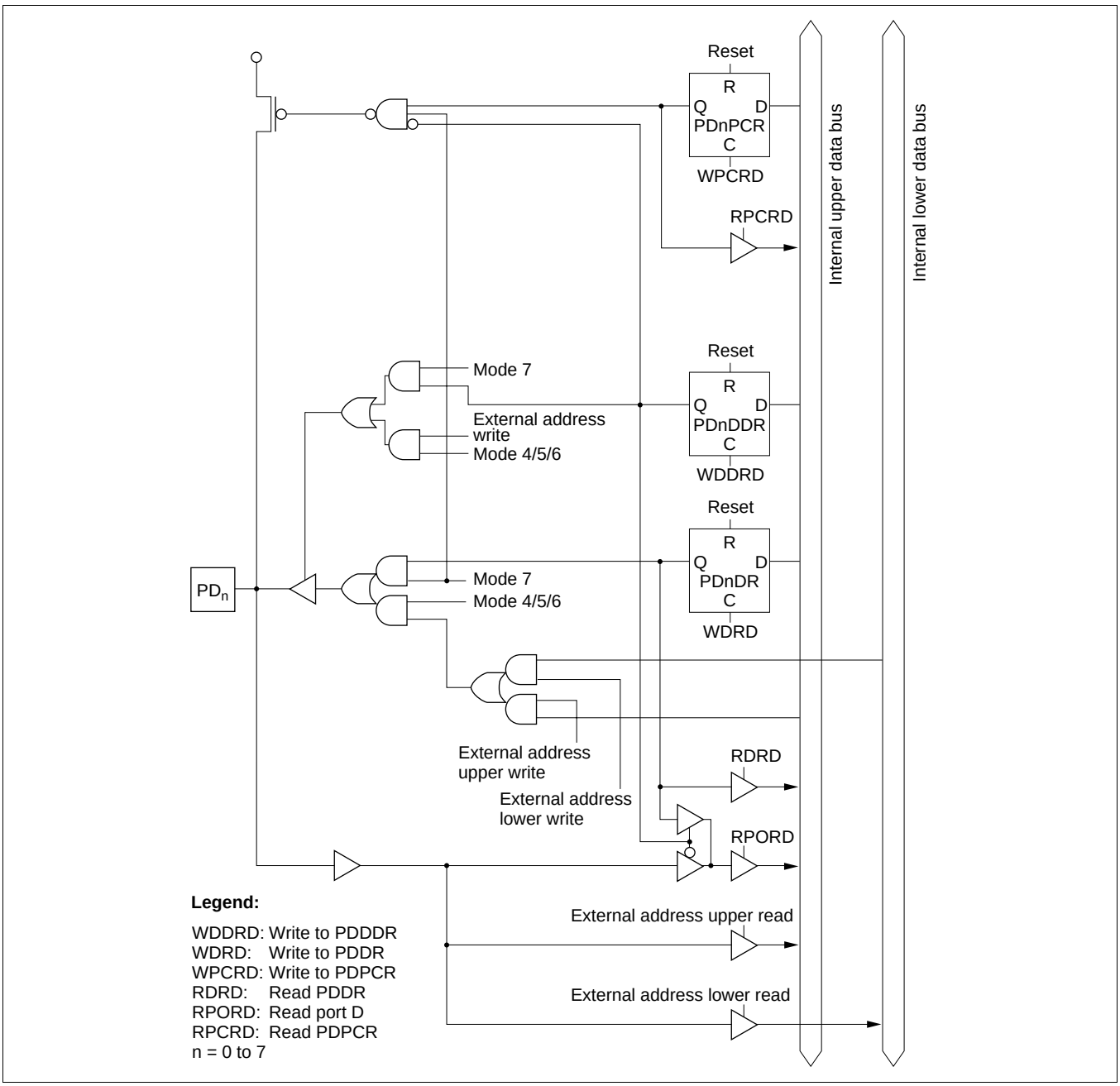

Figure C-10 Port D Block Diagram (Pin PD_0 to PD_7)

C.11 Port E Block Diagram

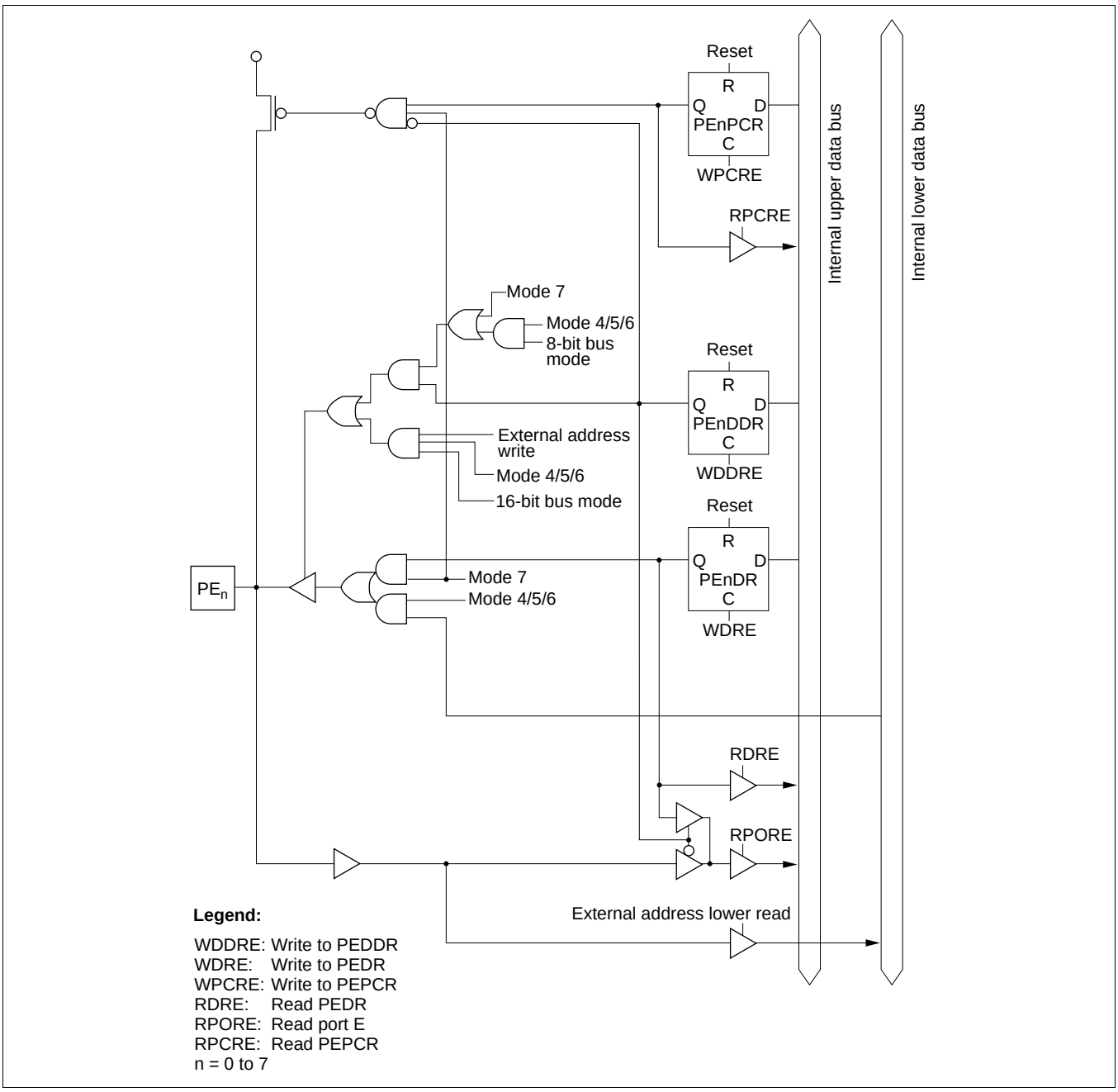

Figure C-11 Port E Block Diagram (Pin PE_0 to PE_7)

C.12 Port F Block Diagram

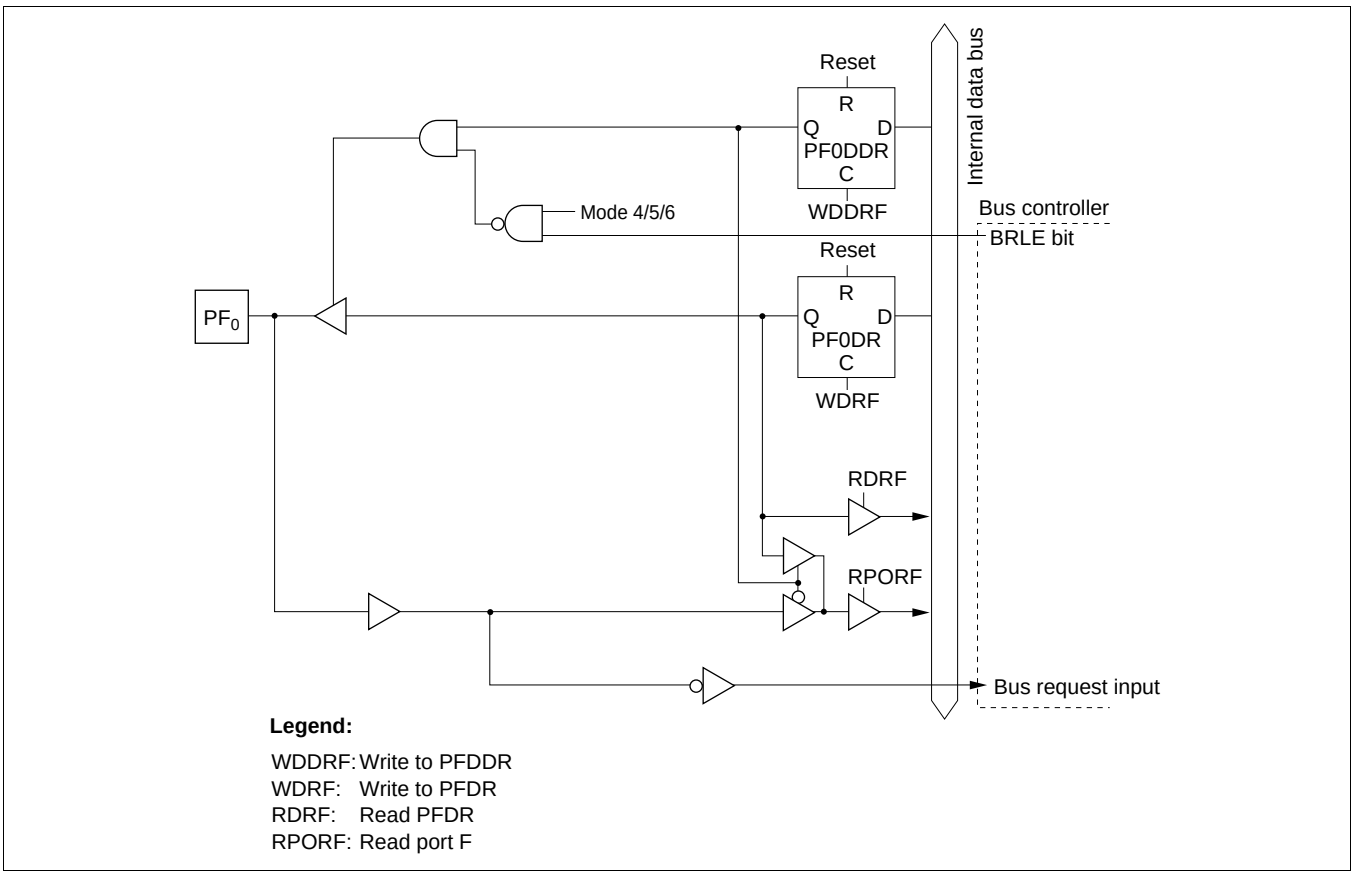

Figure C-12 (a) Port F Block Diagram (Pin PF_0)

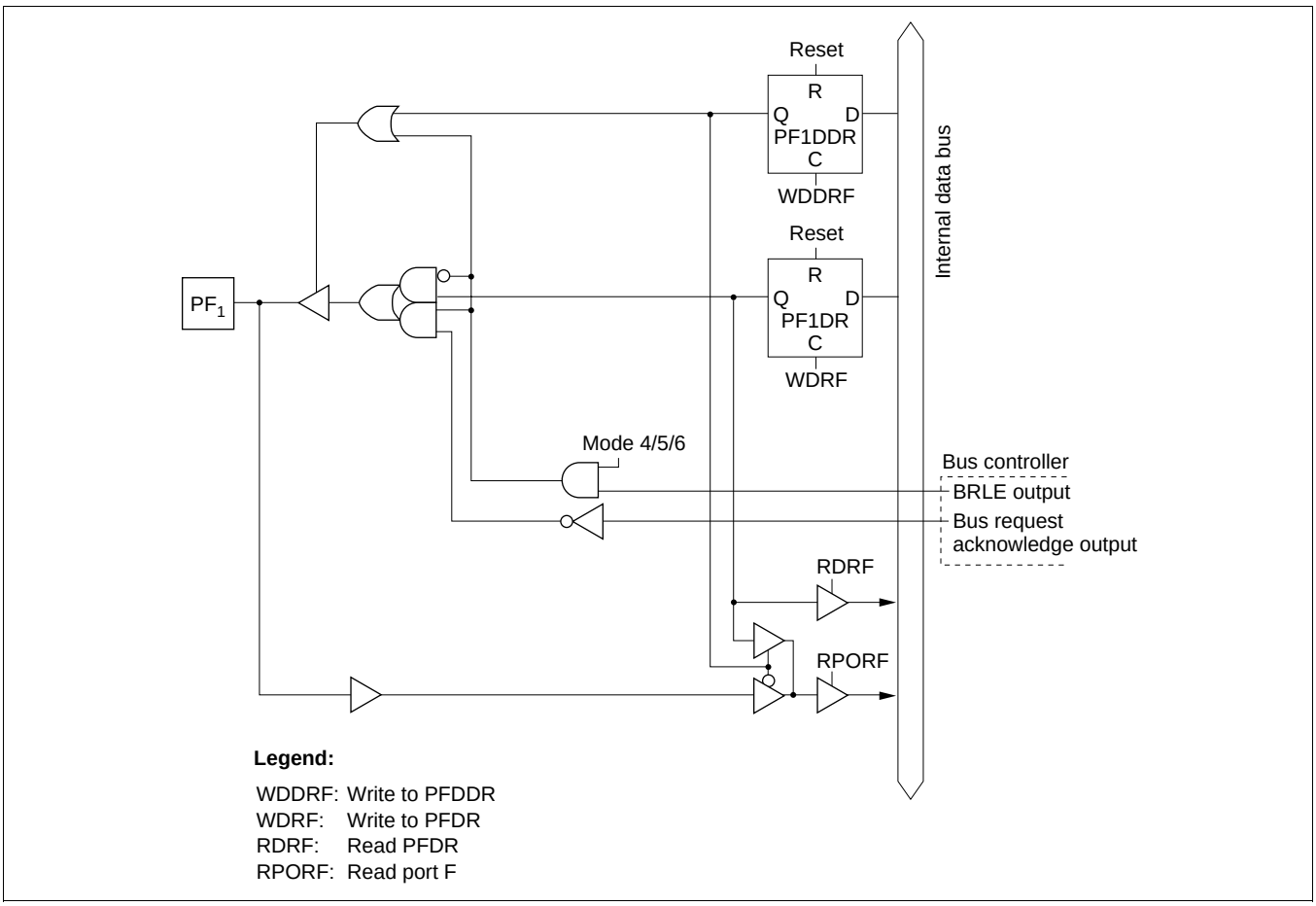

Figure C-12 (b) Port F Block Diagram (Pin PF_1)

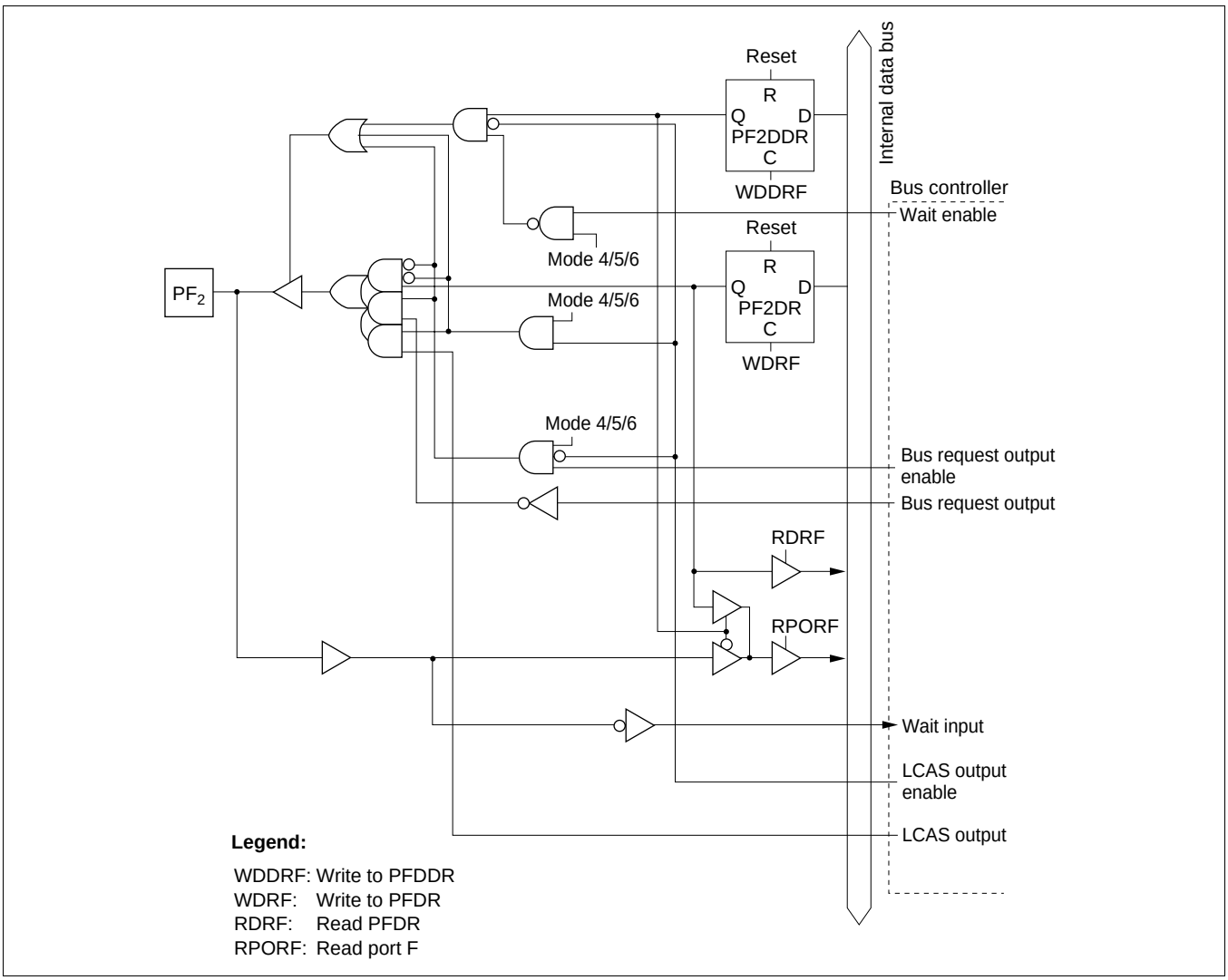

Figure C-12 (c) Port F Block Diagram (Pin PF_2)

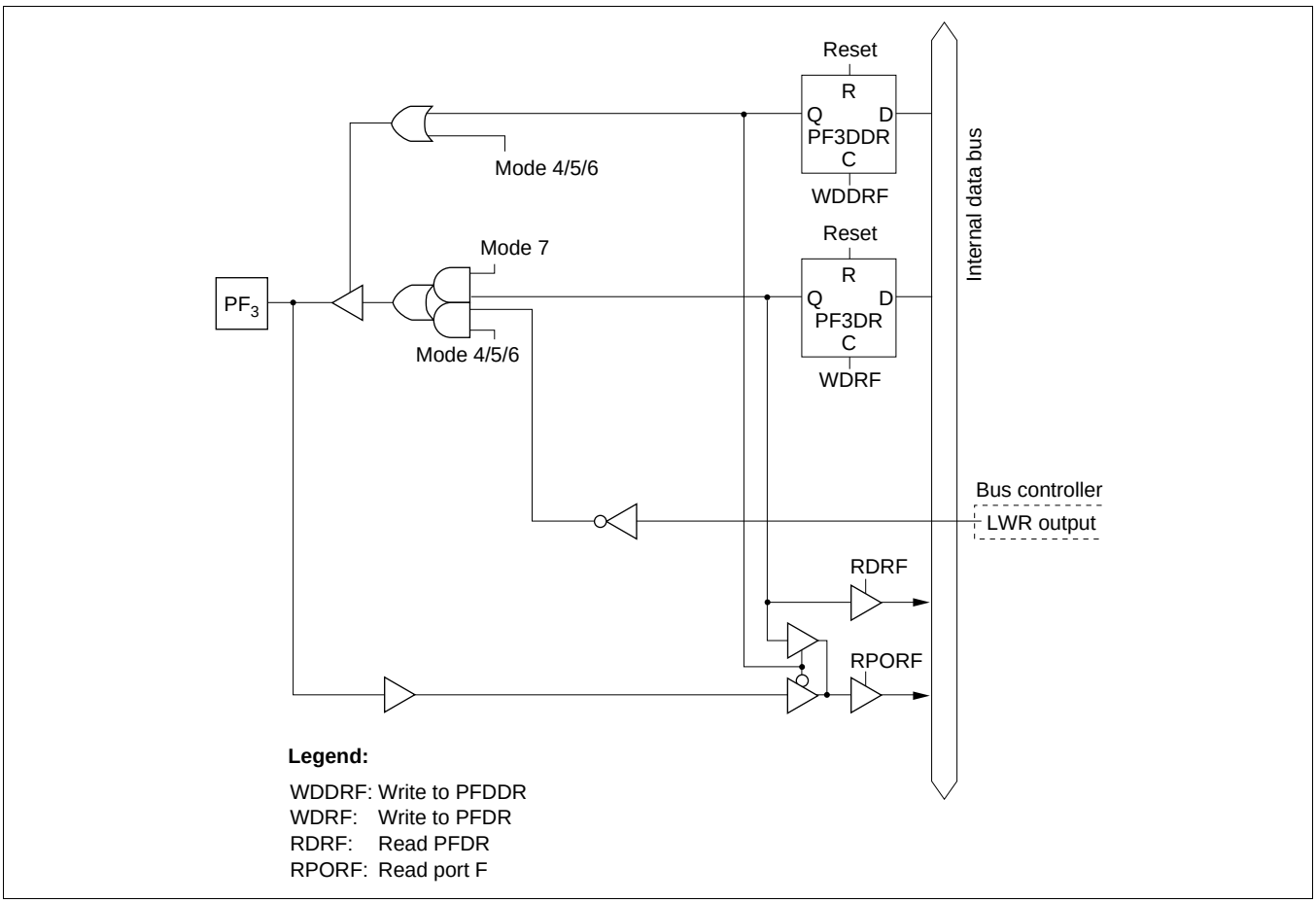

Figure C-12 (d) Port F Block Diagram (Pin PF_3)

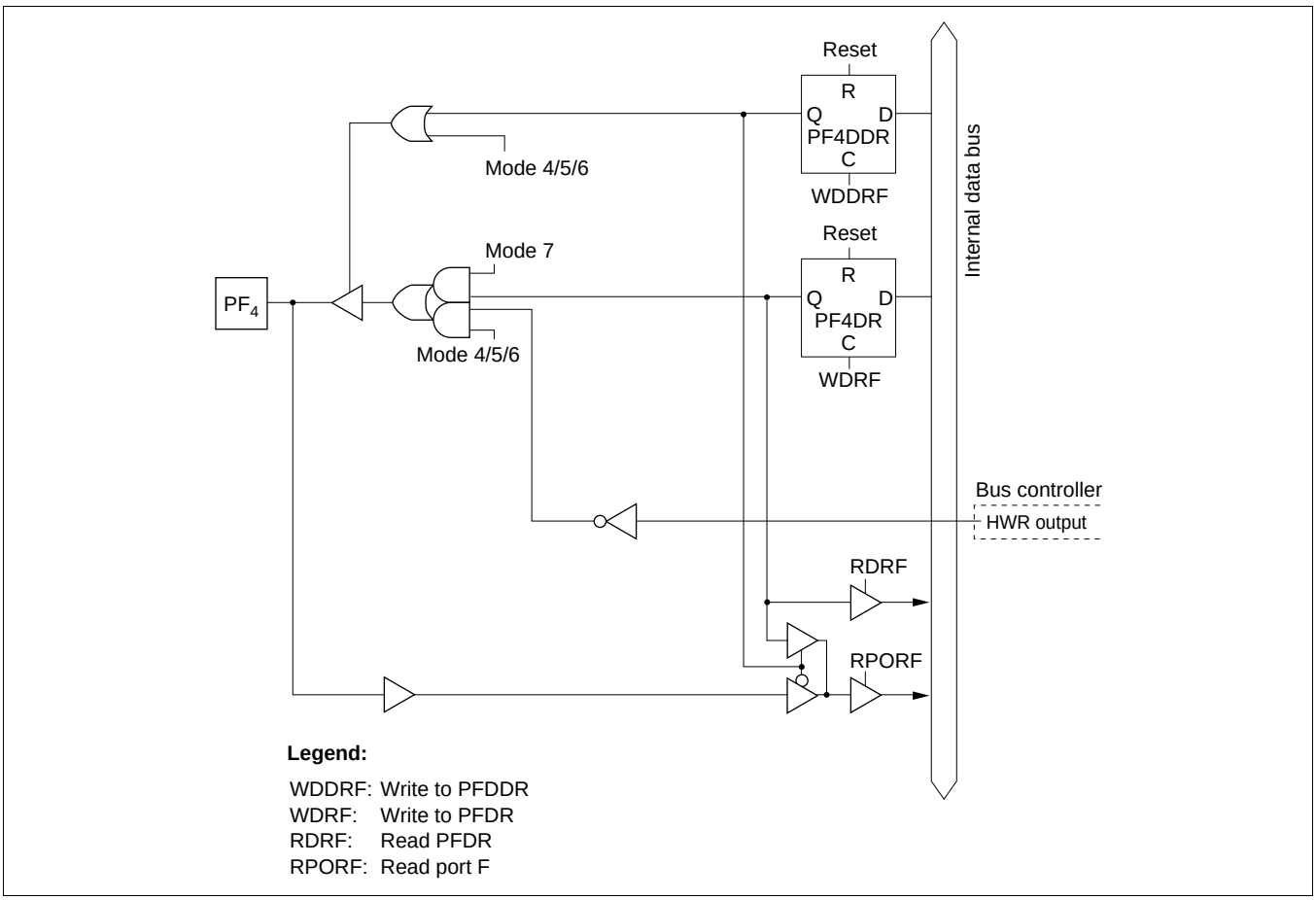

Figure C-12 (e) Port F Block Diagram (Pin PF_4)

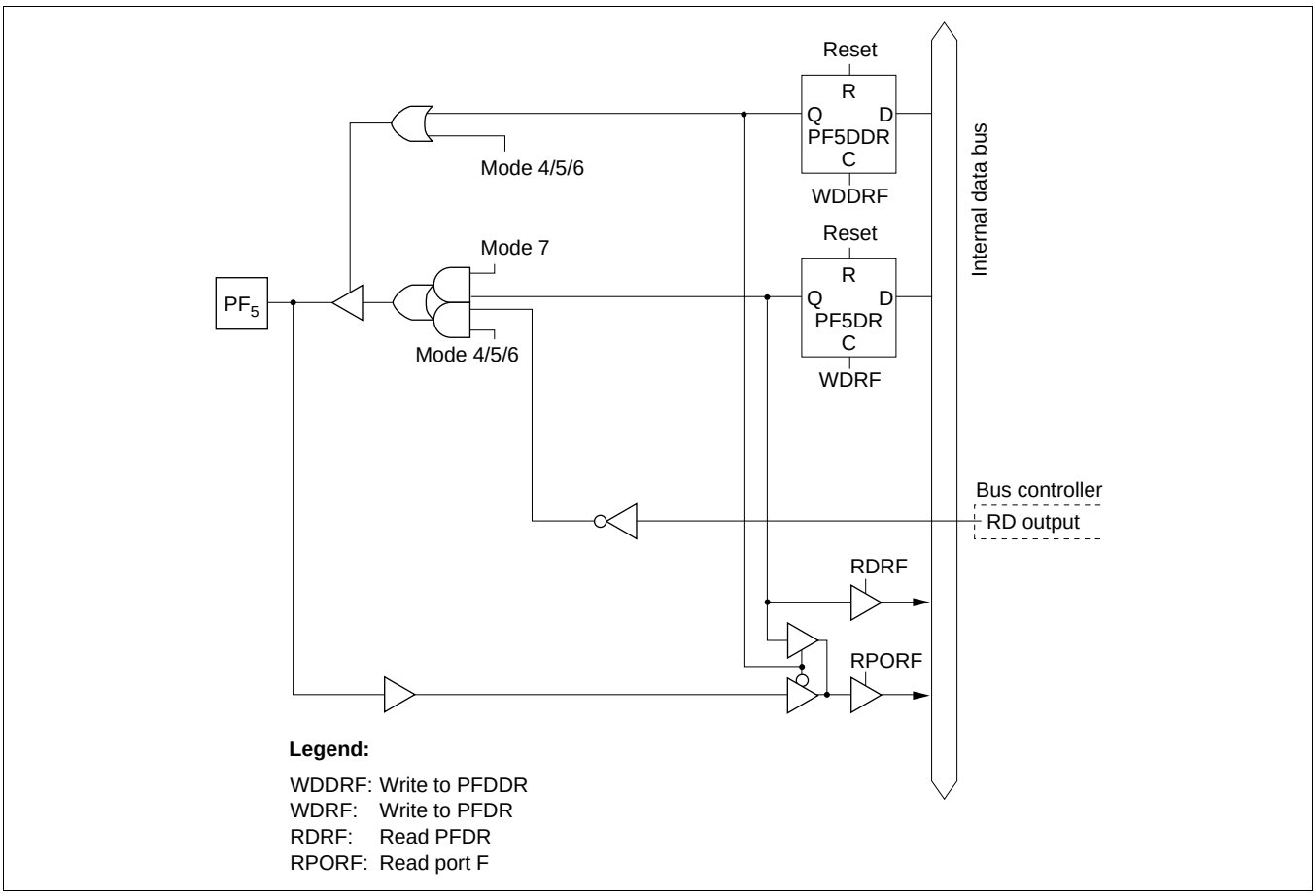

Figure C-12 (f) Port F Block Diagram (Pin PF_5)

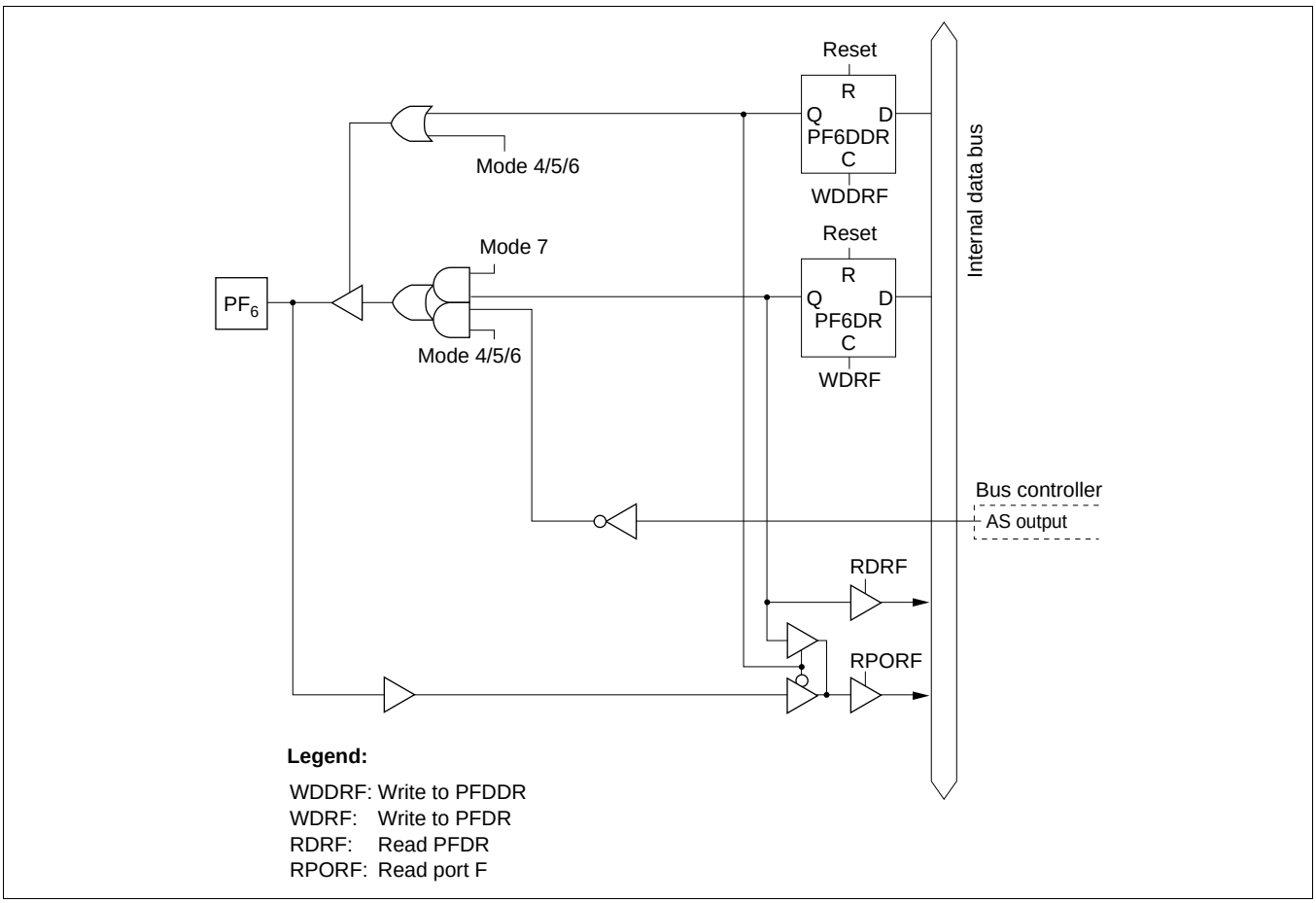

Figure C-12 (g) Port F Block Diagram (Pin PF_6)

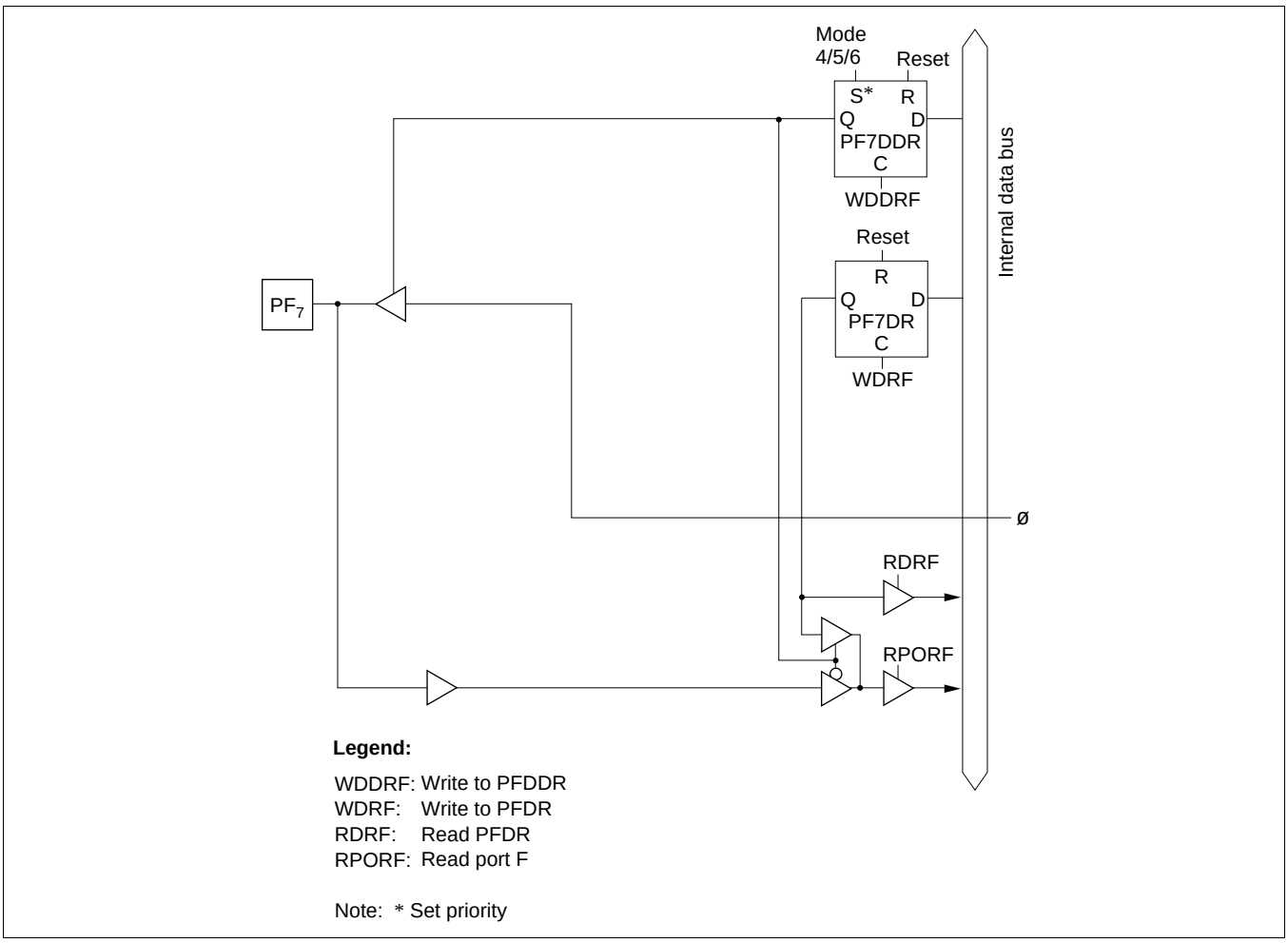

Figure C-12 (h) Port F Block Diagram (Pin PF_7)

C.13 Port G Block Diagram

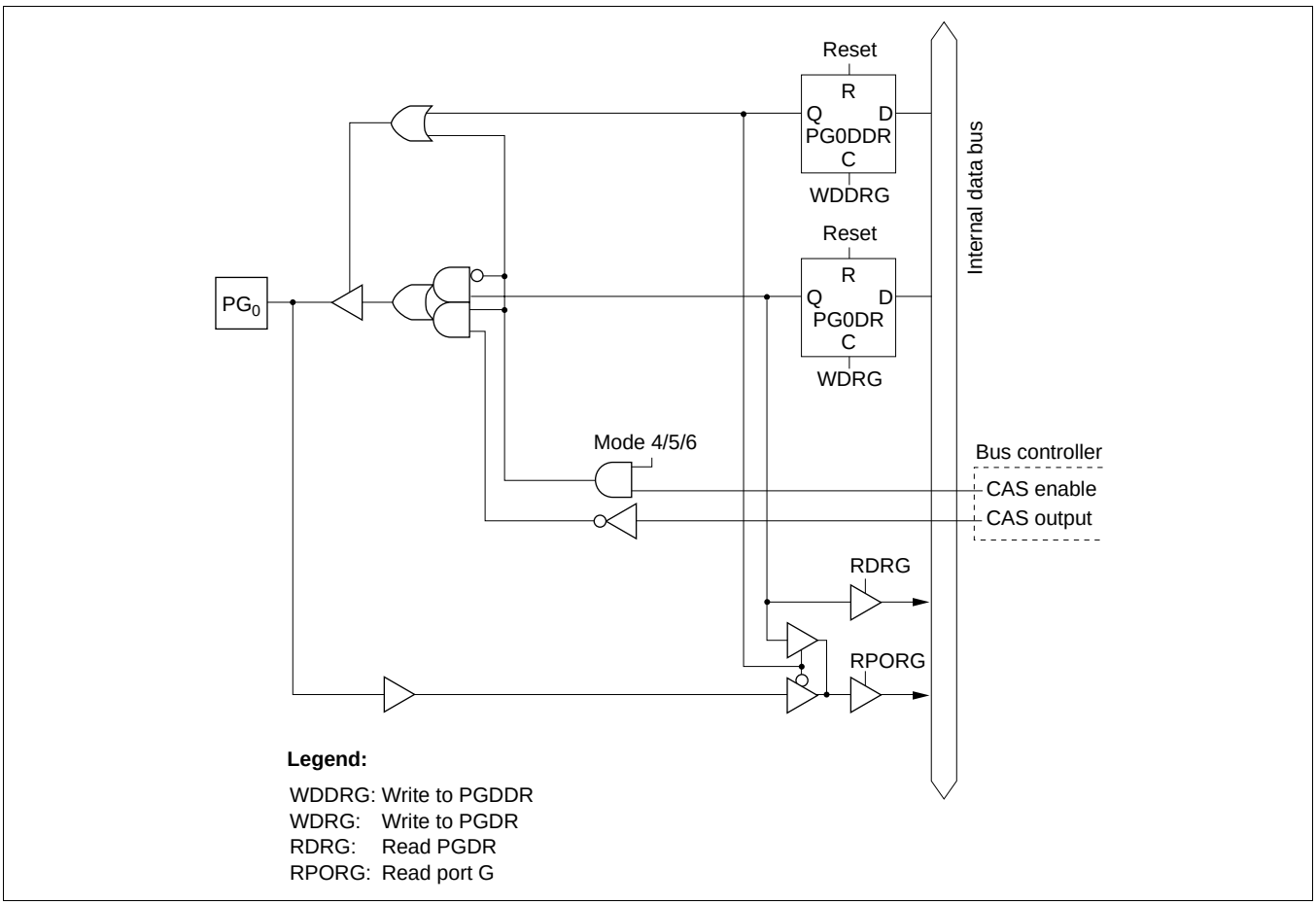

Figure C-13 (a) Port G Block Diagram (Pin PG_0)

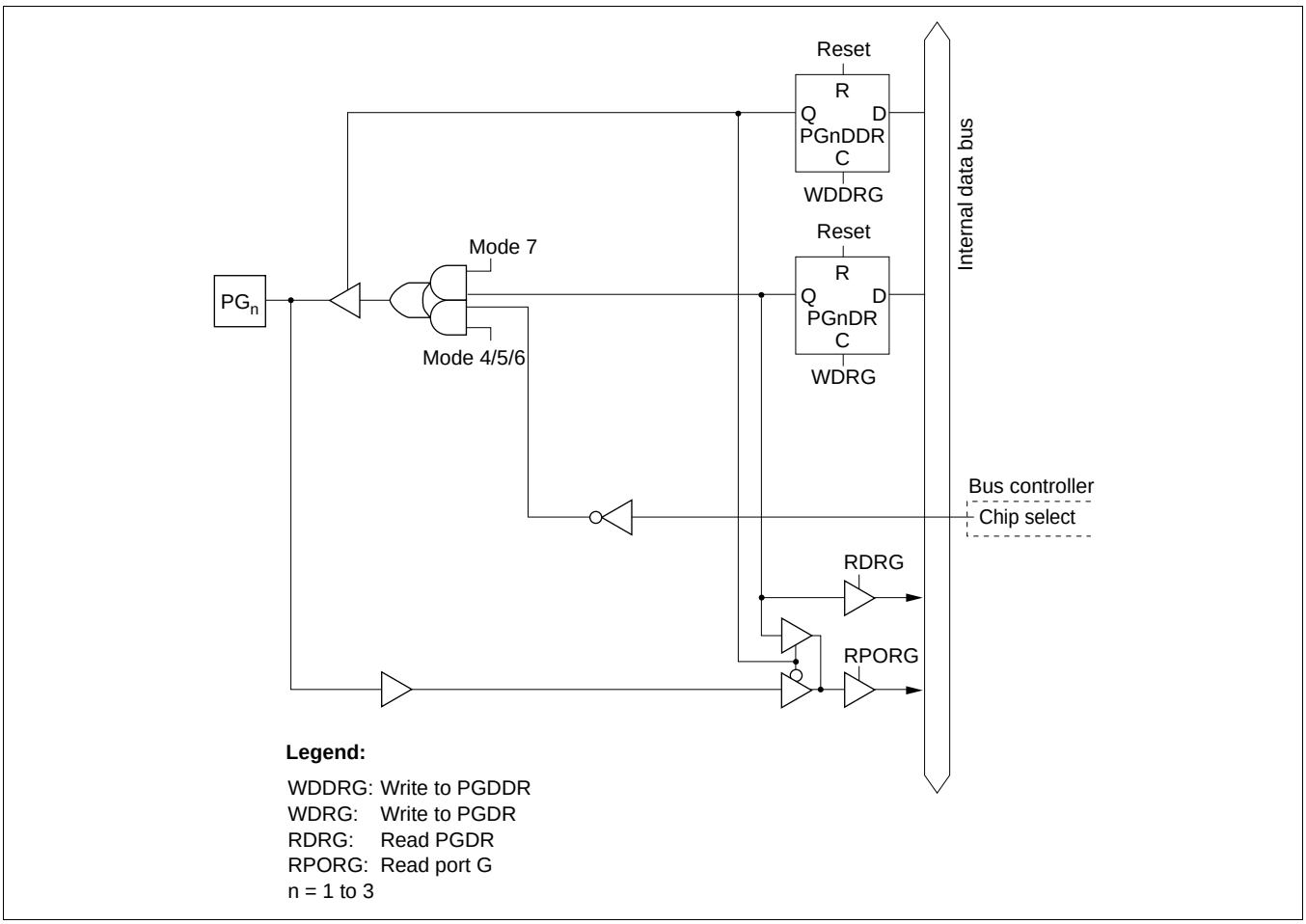

Figure C-13 (b) Port G Block Diagram (Pins PG_1 to PG_3)

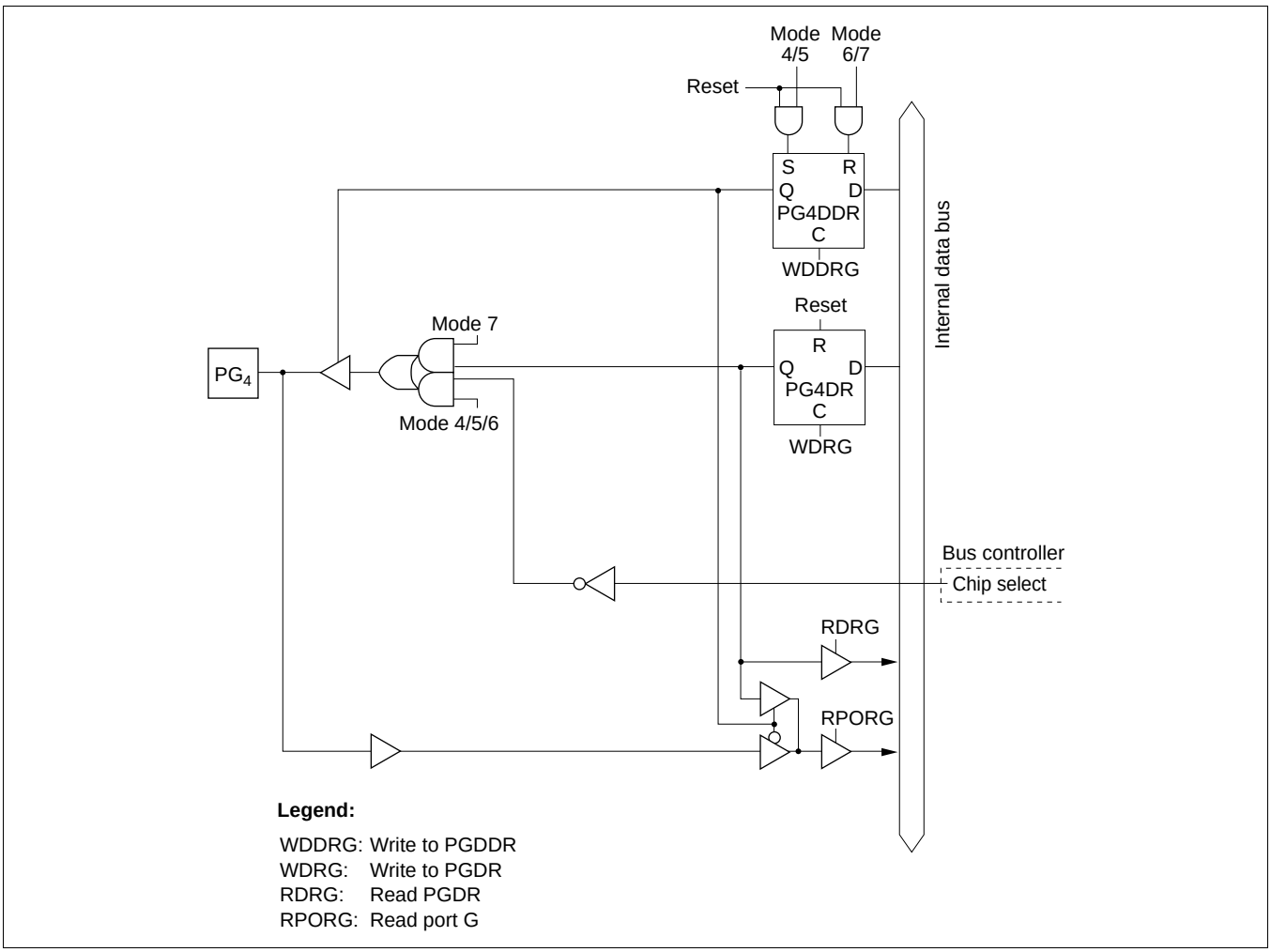

Figure C-13 (c) Port G Block Diagram (Pin PG_4)

Appendix D Pin States

D.1 Port States in Each Mode

Table D-1 I/O Port States in Each Processing State

Port Name Pin Name	MCU Operating Mode	Power-On Reset	Manual Reset*[2]	Hardware Standby Mode	Software Standby Mode	Bus Release State	Program Execution State Sleep Mode
Port 1	4 to 7	T	kept	T	kept	kept	I/O port
Port 2	4 to 7	T	kept	T	kept	kept	I/O port
Port 3	4 to 7	T	kept	T	kept	kept	I/O port
$P4_7$/DA1	4 to 7	T	T	T	[DAOE1 = 1] kept [DAOE1 = 0] T	kept	I/O port
$P4_6$/DA0	4 to 7	T	T	T	[DAOE0 = 1] kept [DAOE0 = 0] T	kept	I/O port
$P4_5$ to $P4_0$	4 to 7	T	T	T	T	T	Input port
Port 5	4 to 7	T	kept	T	kept	kept	I/O port
$P6_5$ to $P6_2$	4 to 7	T	kept	T	kept	kept	I/O port
$P6_7/\overline{CS7}$ $P6_6/\overline{CS6}$ $P6_1/\overline{CS5}$ $P6_0/\overline{CS4}$	7	T	kept	T	kept	kept	I/O port
	4 to 6	T	kept	T	[DDR · OPE = 0] T [DDR · OPE = 1] H	T	[DDR = 0] Input port [DDR = 1] $\overline{CS7}$ to $\overline{CS4}$
PA_7/A_{23} PA_6/A_{22} PA_5/A_{21}	4, 5	T	kept	T	[DDR · OPE = 0] T [DDR · OPE = 1] kept	T	[DDR = 0] Input port [DDR = 1] Address output
	6	T	kept	T	[DDR · OPE = 0] T [DDR · OPE = 1] kept	T	[DDR = 0] Input port [DDR = 1] Address output
	7	T	kept	T	kept	kept	I/O port
PA_4/A_{20} PA_3/A_{19} PA_2/A_{18} PA_1/A_{17} PA_0/A_{16}	4, 5	L	kept	T	[OPE = 0] T [OPE = 1] kept	T	Address output
	6	T	kept	T	[DDR · OPE = 0] T [DDR · OPE = 1] kept	T	[DDR = 0] Input port [DDR = 1] Address output
	7	T	kept	T	kept	kept	I/O port

Port Name Pin Name	MCU Operating Mode		Power-On Reset	Manual Reset*2	Hardware Standby Mode	Software Standby Mode	Bus Release State	Program Execution State Sleep Mode
Port B	4, 5		L	kept	T	[OPE = 0] T [OPE = 1] kept	T	Address output
	6		T	kept	T	[DDR · OPE = 0] T [DDR · OPE = 1] kept	T	[DDR = 0] Input port [DDR = 1] Address output
	7		T	kept	T	kept	kept	I/O port
Port C	4, 5		L	kept	T	[OPE = 0] T [OPE = 1] kept	T	Address output
	6		T	kept	T	[DDR · OPE = 0] T [DDR · OPE = 1] kept	T	[DDR = 0] Input port [DDR = 1] Address output
	7		T	kept	T	kept	kept	I/O port
Port D	4 to 6		T	T*1	T	T	T	Data bus
	7		T	kept	T	kept	kept	I/O port
Port E	4 to 6	8-bit bus	T	kept	T	kept	kept	I/O port
		16-bit bus	T	T*1	T	T	T	Data bus
	7		T	kept	T	kept	kept	I/O port
PF_7/ø	4 to 6		Clock output	[DDR = 0] T [DDR = 1] Clock output	T	[DDR = 0] Input port [DDR = 1] H	[DDR = 0] Input port [DDR = 1] Clock output	[DDR = 0] Input port [DDR = 1] Clock output
	7		T	kept	T	[DDR = 0] Input port [DDR = 1] H	[DDR = 0] Input port [DDR = 1] Clock output	[DDR = 0] Input port [DDR = 1] Clock output
$PF_6/\overline{AS}$ $PF_5/\overline{RD}$ $PF_4/\overline{HWR}$ $PF_3/\overline{LWR}$	4 to 6		H	H*1	T	[OPE = 0] T [OPE = 1] H	T	$\overline{AS}$, $\overline{RD}$, $\overline{HWR}$, $\overline{LWR}$
	7		T	kept	T	kept	kept	I/O port

Port Name Pin Name	MCU Operating Mode	Power-On Reset	Manual Reset*2	Hardware Standby Mode	Software Standby Mode	Bus Release State	Program Execution State Sleep Mode
$PF_2/\overline{LCAS}/\overline{WAIT}/\overline{BREQO}$	4 to 6	T	[BREQOE + WAITE + LCASE = 0] kept [BREQOE = 1] $\overline{BREQO}$ [WAITE = 1] T [LCASE = 1] H*1	T	[BREQOE + WAITE + LCASE = 0] kept [BREQOE = 1] kept [WAITE = 1] T [LCASE = 1, OPE = 0] T [LCASE = 1, OPE = 1] $\overline{LCAS}$	[BREQOE + WAITE + LCASE = 0] kept [BREQOE = 1] $\overline{BREQO}$ [WAITE = 1] T [LCASE = 1] T	[BREQOE + WAITE + LCASE= 0] I/O port [BREQOE = 1] $\overline{BREQO}$ [WAITE = 1] $\overline{WAIT}$ [LCASE = 1] $\overline{LCAS}$
	7	T	kept	T	kept	kept	I/O port
$PF_1/\overline{BACK}$	4 to 6	T	[BRLE = 0] kept [BRLE = 1] $\overline{BACK}$	T	[BRLE = 0] kept [BRLE = 1] H	L	[BRLE = 0] I/O port [BRLE = 1] $\overline{BACK}$
	7	T	kept	T	kept	kept	I/O port
$PF_0/\overline{BREQ}$	4 to 6	T	[BRLE = 0] kept [BRLE = 1] $\overline{BREQ}$	T	[BRLE = 0] kept [BRLE = 1] T	T	[BRLE = 0] I/O port [BRLE = 1] $\overline{BREQ}$
$PG_4/\overline{CS0}$	4, 5	H	[DDR = 0] T [DDR = 1] H*1	T	[DDR · OPE = 0] T [DDR · OPE = 1] H	T	[DDR = 0] Input port [DDR = 1] $\overline{CS0}$
	6	T					
	7	T	kept	T	kept	kept	I/O port
$PG_3/\overline{CS1}$ $PG_2/\overline{CS2}$ $PG_1/\overline{CS3}$	7	T	kept	T	kept	kept	I/O port
	4 to 6	T	[DDR = 0] T [DDR = 1] H*1	T	[DDR · OPE = 0] T [DDR · OPE = 1] H	T	[DDR = 0] Input port [DDR = 1] $\overline{CS1}$ to $\overline{CS3}$
$PG_0/\overline{CAS}$	7	T	kept	T	kept	kept	I/O port
	4 to 6	T	[DRAME = 0] kept [DRAME = 1] H*1	T	[DRAME = 0] kept [OPE = 0] T [DRAME · OPE= 1] $\overline{CAS}$	T	[DRAME = 0] Input port [DRAME = 1] $\overline{CAS}$

Legend:

H: High level
L: Low level
T: High impedance
kept: Input port becomes high-impedance, output port retains state
DDR: Data direction register
OPE: Output port enable
WAITE: Wait input enable
BRLE: Bus release enable

BREQOE: BREQO pin enable
DRAME: DRAM space setting
LCASE: DRAM space setting, CW2 = LCASS = 0

Notes: 1. Indicates the state after completion of the executing bus cycle.
2. Manual reset is only supported in the H8S/2357 ZTAT.

Appendix E Pin States at Power-On

Note that pin states at power-on depend on the state of the $\overline{\text{STBY}}$ pin and NMI pin. The case in which pins settle* from an indeterminate state at power-on, and the case in which pins settle* from the high-impedance state, are described below.

After reset release, power-on reset exception handling is started.

Note: * "Settle" refers to the pin states in a power-on reset in each MCU operating mode.

E.1 When Pins Settle from an Indeterminate State at Power-On

When the NMI pin level changes from low to high after powering on, the chip goes to the power-on reset state*2 after a high level is detected at the NMI pin. While the chip detects a low level at the NMI pin, the manual reset state*1 is established. The pin states are indeterminate during this interval. (Ports may output an internally determined value after powering on.)

The NMI setup time (t_{NMIS}) is necessary for the chip to detect a high level at the NMI pin.

Notes: 1. Applies to the ZTAT version only.
2. Except for the H8S/2357 ZTAT, all resets are power-on resets, regardless of the level on the NMI pin.

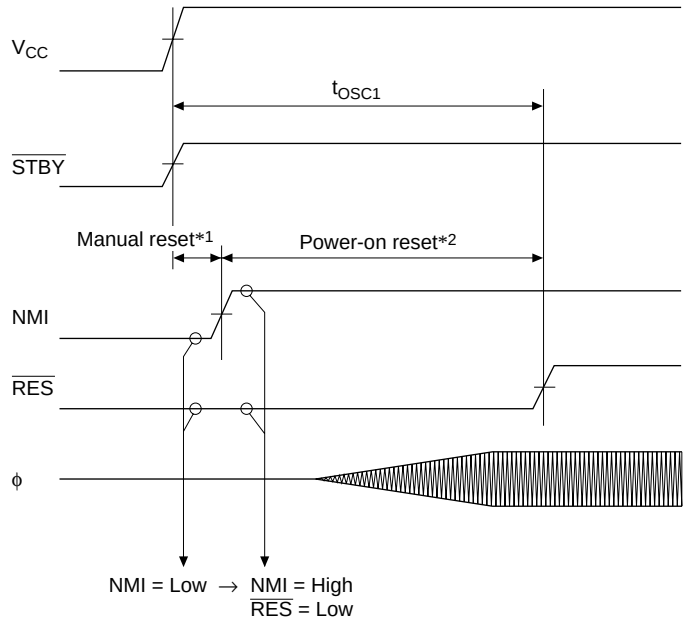

Notes: 1. Applies to the ZTAT version only.
2. Except for the H8S/2357 ZTAT, all resets are power-on resets, regardless of the level on the NMI pin.

Figure E-1 When Pins Settle from an Indeterminate State at Power-On

E.2 When Pins Settle from the High-Impedance State at Power-On

When the $\overline{STBY}$ pin level changes from low to high after powering on, the chip goes to the power-on reset state* after a high level is detected at the $\overline{STBY}$ pin. While the chip detects a low level at the $\overline{STBY}$ pin, it is in the hardware standby mode. During this interval, the pins are in the high-impedance state.

After detecting a high level at the $\overline{STBY}$ pin, the chip starts oscillation.

Note: * Excerpt for the H8S/2357 ZTAT, all resets are power-on resets, regardless of the level on the NMI pin.

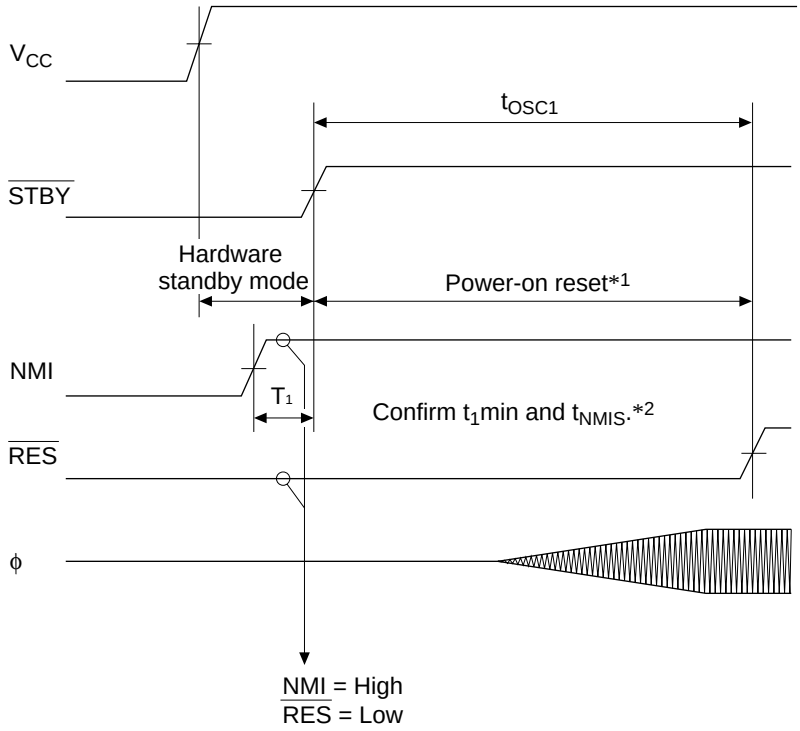

Notes: 1. Applies to the ZTAT version only.
2. Except for the H8S/2357 ZTAT, all resets are power-on resets, regardless of the level on the NMI pin.

Figure E-2 When Pins Settle from the High-Impedance State at Power-On

Appendix F Timing of Transition to and Recovery from Hardware Standby Mode

F.1 Timing of Transition to Hardware Standby Mode

(1) To retain RAM contents with the RAME bit set to 1 in SYSCR, drive the $\overline{\text{RES}}$ signal low at least 10 system clock cycles before the $\overline{\text{STBY}}$ signal goes low, as shown below. $\overline{\text{RES}}$ must remain low until $\overline{\text{STBY}}$ signal goes low (delay from $\overline{\text{STBY}}$ low to $\overline{\text{RES}}$ high: 0 ns or more).

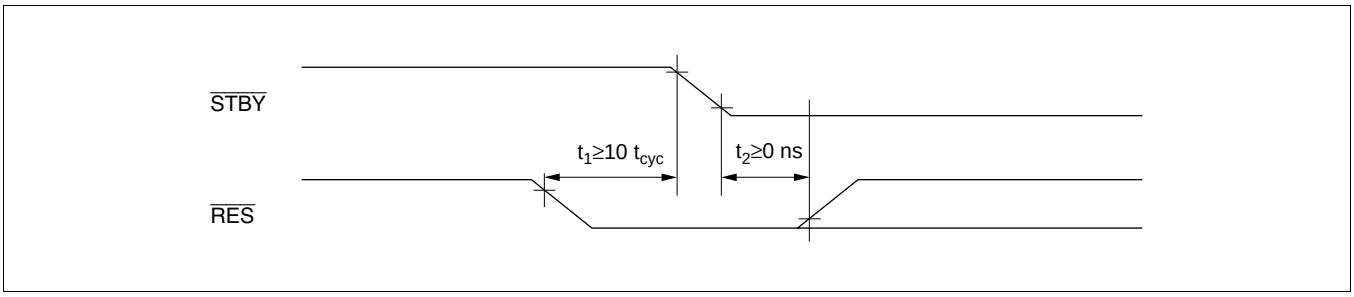

Figure F-1 Timing of Transition to Hardware Standby Mode

(2) To retain RAM contents with the RAME bit cleared to 0 in SYSCR, or when RAM contents do not need to be retained, $\overline{\text{RES}}$ does not have to be driven low as in (1).

F.2 Timing of Recovery from Hardware Standby Mode

Drive the $\overline{\text{RES}}$ signal low and the NMI signal high approximately 100 ns or more before $\overline{\text{STBY}}$ goes high to execute a power-on reset.

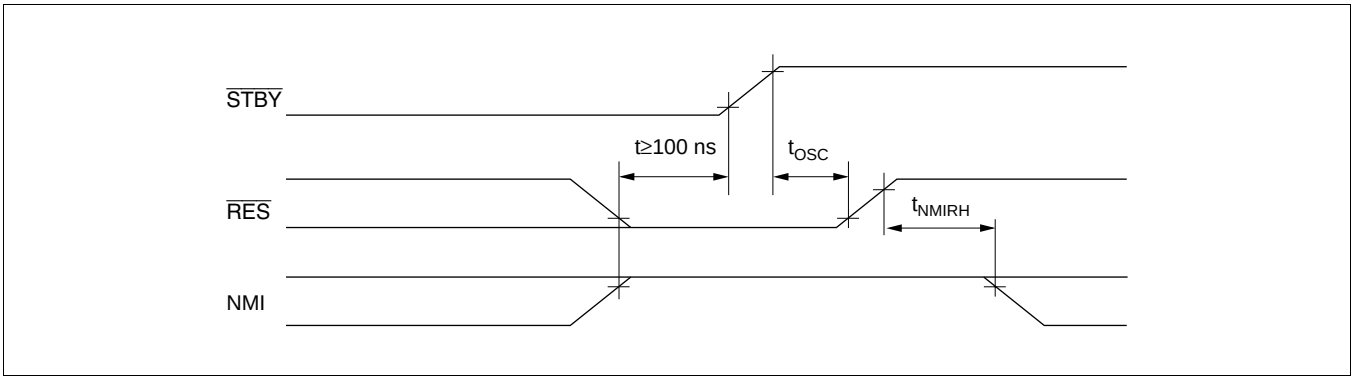

Figure F-2 Timing of Recovery from Hardware Standby Mode

Appendix G Product Code Lineup

Table G.1 H8S/2357, H8S/2352 Group Product Code Lineup

Product Type		Product Code	Mark Code	Package (Hitachi Package Code)
H8S/2357	Masked ROM	HD6432357	HD6432357TE	120-pin TQFP (TFP-120)
			HD6432357F	128-pin QFP (FP-128B)
	ZTAT	HD6472357	HD6472357TE	120-pin TQFP (TFP-120)
			HD6472357F	128-pin QFP (FP-128B)
	F-ZTAT	HD64F2357	HD64F2357TE	120-pin TQFP (TFP-120)
			HD64F2357F	128-pin QFP (FP-128B)
H8S/2352	ROMless	HD6412352	HD6412352TE	120-pin TQFP (TFP-120)
			HD6412352F	128-pin QFP (FP-128B)

Table G.2 H8S/2398, H8S/2394, H8S/2392, H8S/2390 Group Product Code Lineup

Product Type		Product Code	Mark Code	Package (Hitachi Package Code)
H8S/2398	Masked ROM	HD6432398	HD6432398TE*[1]	120-pin TQFP (TFP-120)
			HD6432398F*[1]	128-pin QFP (FP-128B)
	F-ZTAT	HD64F2398	HD64F2398TE*[1]	120-pin TQFP (TFP-120)
			HD64F2398F*[1]	128-pin QFP (FP-128B)
			HD64F2398TET	120-pin TQFP (TFP-120)
			HD64F2398FT	128-pin QFP (FP-128B)
H8S/2394	ROMless	HD6412394	HD6412394TE*[1]	120-pin TQFP (TFP-120)
			HD6412394F*[1]	128-pin QFP (FP-128B)
H8S/2392	ROMless	HD6412392	HD6412392TE	120-pin TQFP (TFP-120)
			HD6412392F	128-pin QFP (FP-128B)
H8S/2390	ROMless	HD6412390	HD6412390TE	120-pin TQFP (TFP-120)
			HD6412390F	128-pin QFP (FP-128B)

Appendix H Package Dimensions

Figures H-1 and H-2 show the TFP-120 and FP-128B package dimensions of the H8S/2357 Group.

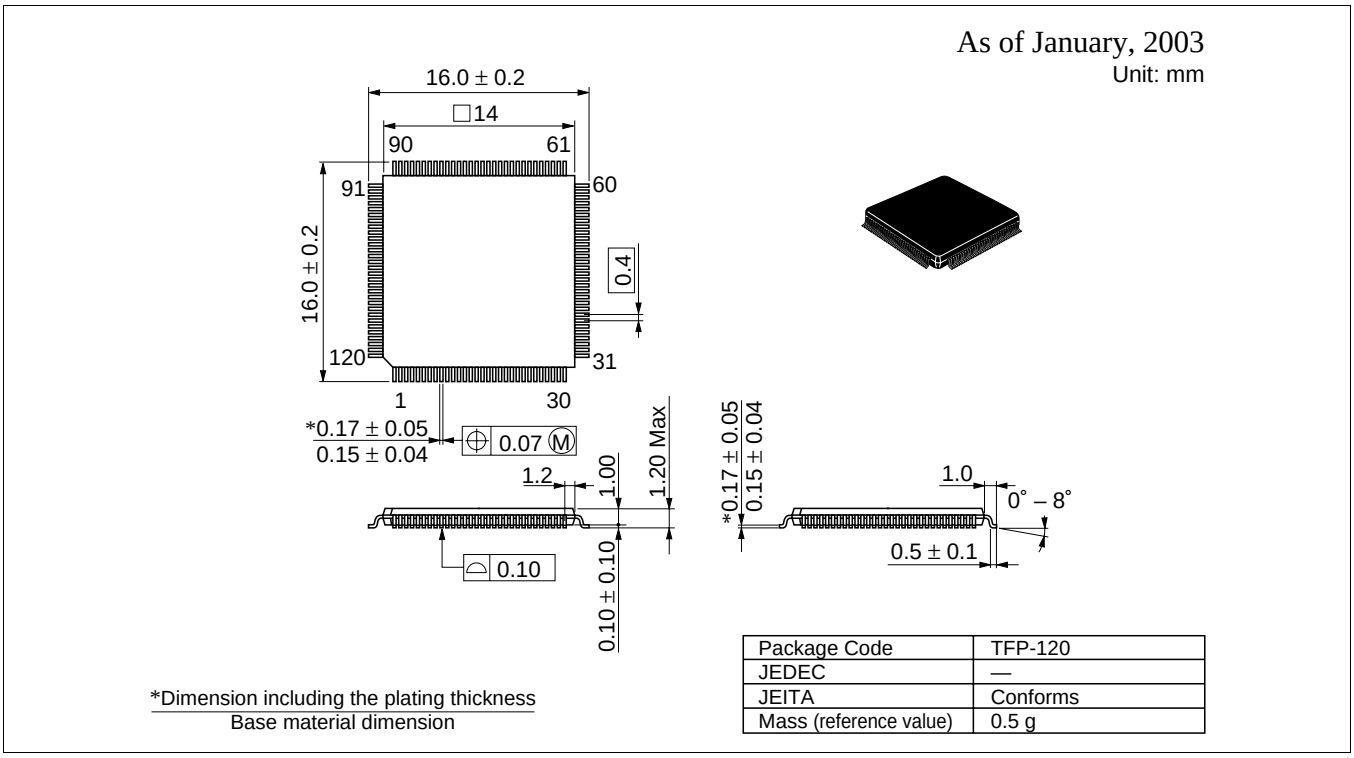

Package Code	TFP-120
JEDEC	—
JEITA	Conforms
Mass (reference value)	0.5 g

Figure H-1 TFP-120 Package Dimension

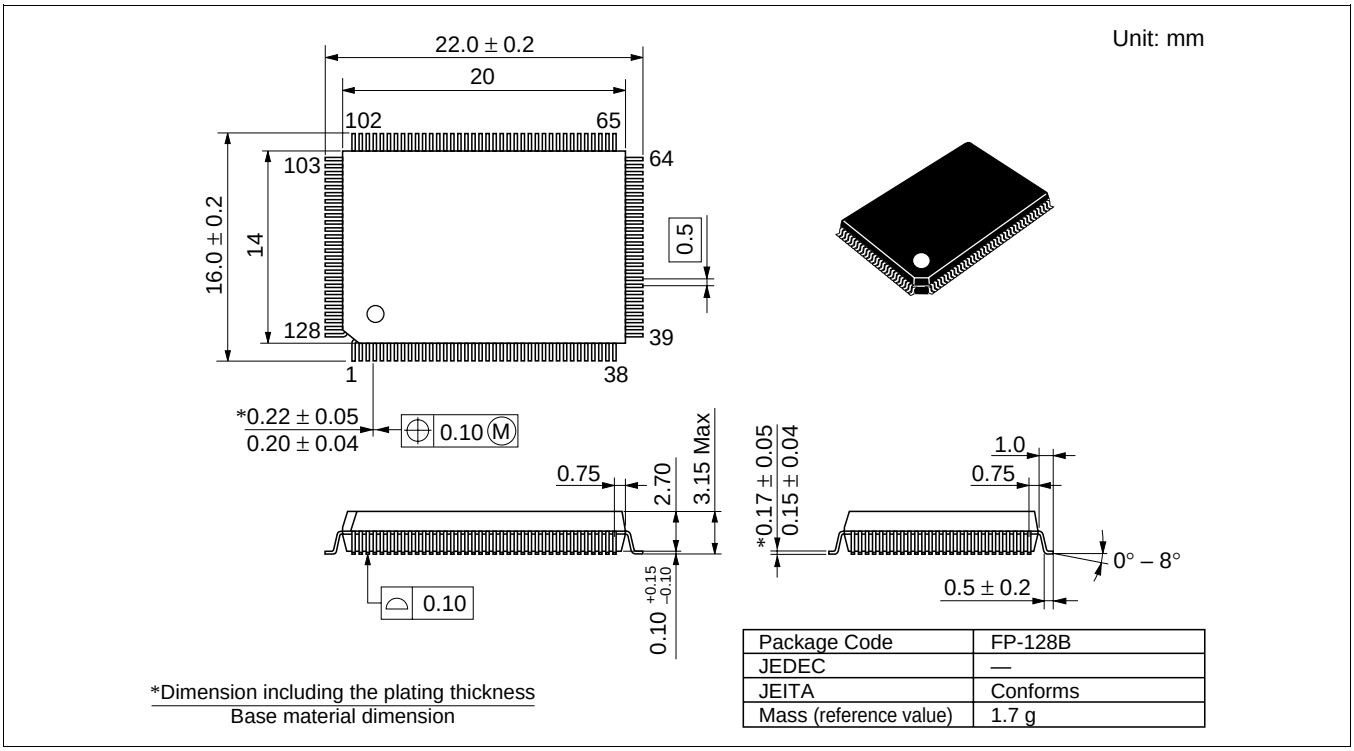

Package Code	FP-128B
JEDEC	—
JEITA	Conforms
Mass (reference value)	1.7 g

Figure H-2 FP-128B Package Dimension

Renesas 16-Bit Single-Chip Microcomputer
Hardware Manual
H8S/2357 Group, H8S/2357F-ZTAT™,H8S/2398F-ZTAT™

Publication Date: 1st Edition, November, 1997
Rev.6.00, October 28, 2004
Published by: Sales Strategic Planning Div.
Renesas Technology Corp.
Edited by: Technical Documentation & Information Department
Renesas Kodaira Semiconductor Co., Ltd.

© 2004. Renesas Technology Corp., All rights reserved. Printed in Japan.

Renesas Technology Corp. Sales Strategic Planning Div. Nippon Bldg., 2-6-2, Ohte-machi, Chiyoda-ku, Tokyo 100-0004, Japan

RENESAS SALES OFFICES

http://www.renesas.com

Refer to "**http://www.renesas.com/en/network**" for the latest and detailed information.

Renesas Technology America, Inc.
450 Holger Way, San Jose, CA 95134-1368, U.S.A
Tel: <1> (408) 382-7500, Fax: <1> (408) 382-7501

Renesas Technology Europe Limited
Dukes Meadow, Millboard Road, Bourne End, Buckinghamshire, SL8 5FH, U.K.
Tel: <44> (1628) 585-100, Fax: <44> (1628) 585-900

Renesas Technology Hong Kong Ltd.
7th Floor, North Tower, World Finance Centre, Harbour City, 1 Canton Road, Tsimshatsui, Kowloon, Hong Kong
Tel: <852> 2265-6688, Fax: <852> 2730-6071

Renesas Technology Taiwan Co., Ltd.
10th Floor, No.99, Fushing North Road, Taipei, Taiwan
Tel: <886> (2) 2715-2888, Fax: <886> (2) 2713-2999

Renesas Technology (Shanghai) Co., Ltd.
Unit2607 Ruijing Building, No.205 Maoming Road (S), Shanghai 200020, China
Tel: <86> (21) 6472-1001, Fax: <86> (21) 6415-2952

Renesas Technology Singapore Pte. Ltd.
1 Harbour Front Avenue, #06-10, Keppel Bay Tower, Singapore 098632
Tel: <65> 6213-0200, Fax: <65> 6278-8001

Colophon 2.0

H8S/2357 Group, H8S/2357F-ZTAT™, H8S/2398F-ZTAT™
Hardware Manual

Renesas Electronics Corporation
1753, Shimonumabe, Nakahara-ku, Kawasaki-shi, Kanagawa 211-8668 Japan

REJ09B0138-0600H

Компания «ЭлектроПласт» предлагает заключение долгосрочных отношений при поставках импортных электронных компонентов на взаимовыгодных условиях!

Наши преимущества:

- Оперативные поставки широкого спектра электронных компонентов отечественного и импортного производства напрямую от производителей и с крупнейших мировых складов;
- Поставка более 17-ти миллионов наименований электронных компонентов;
- Поставка сложных, дефицитных, либо снятых с производства позиций;
- Оперативные сроки поставки под заказ (от 5 рабочих дней);
- Экспресс доставка в любую точку России;
- Техническая поддержка проекта, помощь в подборе аналогов, поставка прототипов;
- Система менеджмента качества сертифицирована по Международному стандарту ISO 9001;
- Лицензия ФСБ на осуществление работ с использованием сведений, составляющих государственную тайну;
- Поставка специализированных компонентов (Xilinx, Altera, Analog Devices, Intersil, Interpoint, Microsemi, Aeroflex, Peregrine, Syfer, Eurofarad, Texas Instrument, Miteq, Cobham, E2V, MA-COM, Hittite, Mini-Circuits,General Dynamics и др.);

Помимо этого, одним из направлений компании «ЭлектроПласт» является направление «Источники питания». Мы предлагаем Вам помощь Конструкторского отдела:

- Подбор оптимального решения, техническое обоснование при выборе компонента;
- Подбор аналогов;
- Консультации по применению компонента;
- Поставка образцов и прототипов;
- Техническая поддержка проекта;
- Защита от снятия компонента с производства.

Как с нами связаться

Телефон: 8 (812) 309 58 32 (многоканальный)
Факс: 8 (812) 320-02-42
Электронная почта: org@eplast1.ru
Адрес: 198099, г. Санкт-Петербург, ул. Калинина, дом 2, корпус 4, литера А.