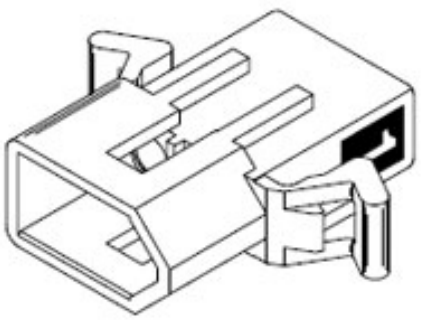
This document was generated on 06/07/2010

PLEASE CHECK WWW.MOLEX.COM FOR LATEST PART INFORMATION

Part Number: 0003092021
Status: Active
Overview: standard_093
Description: 2.36mm (.093") Diameter Standard .093" Pin and Socket Plug Housing, 2 Circuits, With Standard Mounting Ears



Series image - Reference only

Documents:

- 3D Model
- Packaging Specification (PDF)
- Drawing (PDF)
- Product Specification PS-02-09 (PDF)
- Product Specification PS-42477 (PDF)
- Product Specification PS-43660-9999 (PDF)
- RoHS Certificate of Compliance (PDF)

General

Product Family	Crimp Housings
Series	1545
Comments	Polarized to Mating Part, 17.0A max. can be achieved when housing is used with 42477 or 42478 terminals
MolexKits	Yes
Overview	standard_093
Product Name	Standard .093"

Physical

Breakaway	No
Circuits (maximum)	2
Circuits Detail	1x2
Color - Resin	Natural
Gender	Dual
Glow-Wire Compliant	No
Keying to Mating Part	None
Lock to Mating Part	Yes
Material - Resin	Nylon
Number of Rows	1
Packaging Type	Bag
Panel Mount	Yes
Pitch - Mating Interface (in)	0.248 In
Pitch - Mating Interface (mm)	6.30 mm
Stackable	No
Temperature Range - Operating	-40°C to +105°C

Electrical

Current - Maximum per Contact	14A

Material Info

Old Part Number	1545-P

Reference - Drawing Numbers

Packaging Specification	PK-1545-001
Product Specification	PS-02-09, PS-42477, PS-43660-9999
Sales Drawing	SD-1545-*

EU RoHS
ELV and RoHS Compliant
REACH SVHC
Contains SVHC: No
Halogen-Free Status
Not Reviewed

China RoHS

Need more information on product environmental compliance?

Email productcompliance@molex.com
For a multiple part number RoHS Certificate of Compliance, click here

Please visit the Contact Us section for any non-product compliance questions.

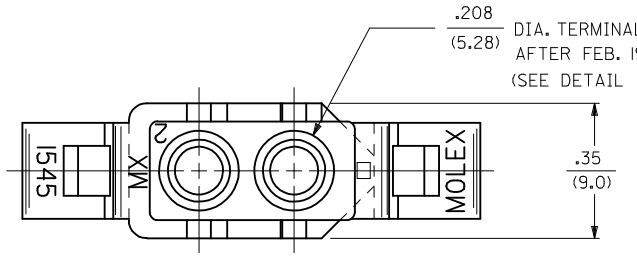
Search Parts in this Series
1545Series

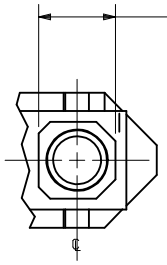
Mates With
42191 Pin and Socket Receptacle

Use With
1189 Crimp Terminals, 1190 Crimp Terminals, 1376 Male PC Tail Terminals, 1377 Female PC Tail Terminals, 1380 Male Crimp Terminals, 1381 Female Crimp Terminals, 1433 Crimp Terminals, 1434 Male Crimp Terminals, 1973 Male Crimp Terminals

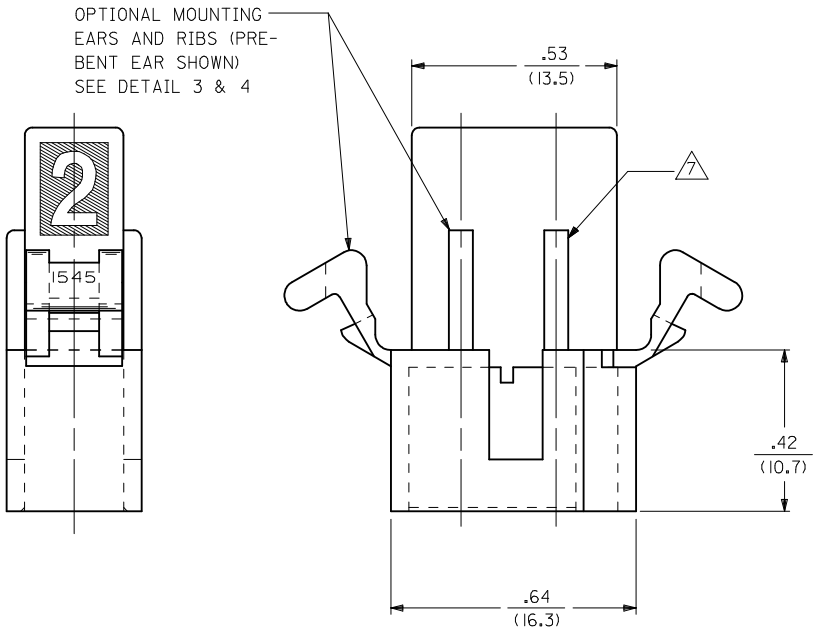
This document was generated on 06/07/2010

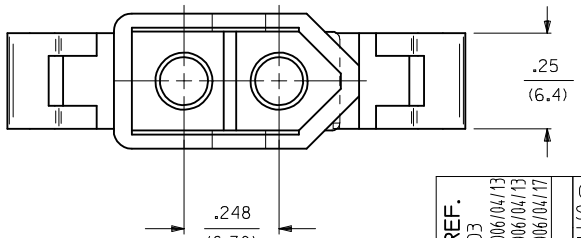
PLEASE CHECK WWW.MOLEX.COM FOR LATEST PART INFORMATION

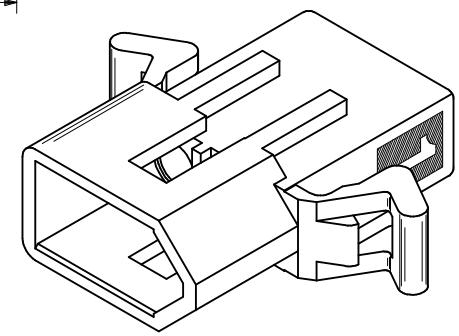




DETAIL "I"







UPDATE NOTE REF.				QUALITY SYMBOLS	GENERAL TOLERANCES (UNLESS SPECIFIED)			DIMENSION STYLE	SCALE	DESIGN UNITS	THIRD ANGLE PROJECTION
EC NO: UCP2006-2303	2006/04/13			▼=0		mm	INCH	IN/MM	4:1	INCH	
DRWN:PRIDDER	2006/04/13			▽(C)=0	4 PLACES	± ---	± ---	DRAWN BY / DATE			TITLE
CHKD:AELHAG	2006/04/17				3 PLACES	± ---	± .010	GEP 8/9/88			.093/(2.36) HOUSING, PLUG & RECEPTACLE, 2 CKT., .248/(6.30) CTR.
APPR:FSMITH					2 PLACES	± 0.25	± .014	CHECKED BY / DATE			
DESCRIPTION					1 PLACE	± 0.35	± ---	RW 8/9/88			
U1			REV		ANGULAR ±1/2°			APPROVED BY / DATE			molex MOLEX INCORPORATED
				DRAFT WHERE APPLICABLE MUST REMAIN WITHIN DIMENSIONS				RAS 8/9/88			
								MATERIAL NO.		DOCUMENT NO.	SHEET NO.
								SEE CHART		SD-1545-*	1 OF 3
								SIZE C	THIS DRAWING CONTAINS INFORMATION THAT IS PROPRIETARY TO MOLEX INCORPORATED AND SHOULD NOT BE USED WITHOUT WRITTEN PERMISSION		

PLUG	
PART NO.	ENG. NO.
03-09-2021	1545-P
03-09-2022	1545-P1
03-09-7021	1545-PBK
03-09-7022	1545-P1BK
03-09-2023	1545-P2
03-09-7024	1545-P1RD
03-09-7023	1545-P1BU
50-36-1686	1545-P1-1

RECEPTACLE	
PART NO.	ENG. NO.
03-09-6021	1545-R3BK
03-09-6023	1545-R3RD
03-09-6024	1545-R3BU
03-09-1022	1545-R1
03-09-1023	1545-R2
03-09-6025	1545-R1BU
03-09-1027	1545-R3
50-36-1685	1545-R1-1

LEGEND : PLUG

1545-P***-*

OPTIONS:
BLANK = WITH STD. EARS
1 = WITHOUT EARS
2 = WITH PREBENT EARS

COLOR: BLANK=NATURAL COLOR
AM=AMBER BK=BLACK BU=BLUE
BN=BROWN GY=GRAY GN=GREEN
OR=ORANGE RD=RED YW=YELLOW

BLANK = MATERIAL CODE A
1 = MATERIAL CODE B

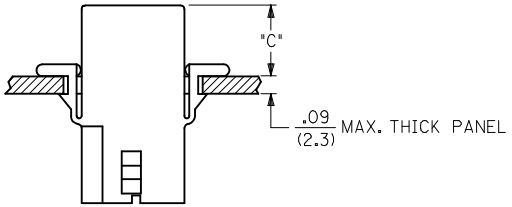
LEGEND : RECEPTACLE

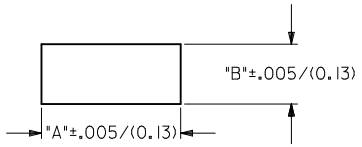
1545-R***-*

BLANK = WITH STD. EARS & RAMPS
1 = WITHOUT EARS, WITH RAMPS
2 = WITHOUT EARS, WITHOUT RAMPS
3 = WITH PREBENT EARS & RAMPS

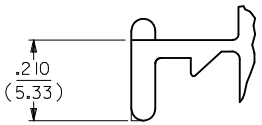
COLOR: BLANK=NATURAL COLOR
AM=AMBER BK=BLACK BU=BLUE
BN=BROWN GY=GRAY GN=GREEN
OR=ORANGE RD=RED YW=YELLOW

BLANK = MATERIAL CODE A
1 = MATERIAL CODE B

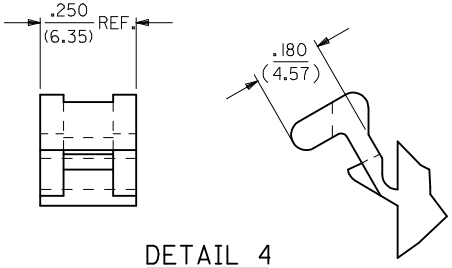




RECOMMENDED PANEL OPENING
(SCALE 2:1)



DETAIL 3
.093/(2.36) STANDARD MOUNTING EAR
(SCALE 4:1)



DETAIL 4
.093/(2.36) PREBENT MOUNTING EAR
(SCALE 4:1)

NOTES:

1. MATERIAL: - A = NYLON, PA66, 94V-2. COLOR: SEE LEGEND.
   B = UL94V-0, PA6 NYLON, IEC 60335-1, 4TH EDITION GLOW WIRE CAPABLE.
2. FINISH: NONE.
3. PRODUCT SPECIFICATION: PS-02-09.
4. PACKAGING INFORMATION: PK-1545-001
5. .97/(24.6) REF. FOR TOOLS BUILT PRIOR TO FEB. 1985.
6. 1.00/(25.4) REF. FOR TOOLS BUILT PRIOR TO FEB. 1985.
7. RIBS ARE PRESENT ONLY ON PARTS WITH MOUNTING EARS.
8. EACH TERMINAL POCKET WILL ACCEPT UP TO:
   (2) #18 AWG WIRES HAVING 1/32" THK. INSULATION OR
   (1) #16 AWG WIRE HAVING 1/16" THK. INSULATION OR
   (1) #16 AWG & (1) 18 AWG WIRE HAVING 1/32" THK. INSULATION .
9. CIRCUIT I.D. NUMBERS ON SIDE OF HOUSING APPEAR ON PARTS FROM TOOLS BUILT AFTER 11/25/91.
10. PARTS CONFORM TO CLASS 'B' REQUIREMENTS OF COSMETIC SPECIFICATION PS-45499-002 EXCEPT MATERIAL OPTION 'B' MEETS CLASS 'C' REQUIREMENTS FOR SINK AND DISCOLORATION.

HOUSING	DIM. "A"	DIM. "B"	DIM. "C" (PREBENT)	DIM. "C" (STD. EAR)
PLUG	.800/(20.32)	.375/(9.53)	.40/(10.2)	.39/(9.9)
RECEPTACLE	.725/(18.42)	.312/(7.92)	.41/(10.4)	.40/(10.2)

ADD MAT'L & P/N'S
EC NO: UCP2007-2366 2007/05/25
DRWN: AELHAG 2007/06/01
CHKD: LSCHMIDT 2007/06/04
APPR: FSMITH
DESCRIPTION
V
REV

QUALITY SYMBOLS
▼=0
Ⓒ▽=0

GENERAL TOLERANCES (UNLESS SPECIFIED)

	mm	INCH
4 PLACES	± ---	± ---
3 PLACES	± ---	± .010
2 PLACES	± 0.25	± .014
1 PLACE	± 0.35	± ---
ANGULAR ± 1 °		

DRAFT WHERE APPLICABLE MUST REMAIN WITHIN DIMENSIONS

DIMENSION STYLE	IN/MM
SCALE	2:1
DESIGN UNITS	INCH
	THIRD ANGLE PROJECTION
DRAWN BY / DATE	GEP 8/9/88
CHECKED BY / DATE	RW 8/9/88
APPROVED BY / DATE	RAS 8/9/88
TITLE	.093(2.36) HOUSING, PLUG & RECEPTACLE, 2 CKT., .248/(6.30) CTR.
	MOLEX INCORPORATED
MATERIAL NO.	SEE CHART
DOCUMENT NO.	SD-1545-*
SHEET NO.	3 OF 3
SIZE	C

THIS DRAWING CONTAINS INFORMATION THAT IS PROPRIETARY TO MOLEX INCORPORATED AND SHOULD NOT BE USED WITHOUT WRITTEN PERMISSION

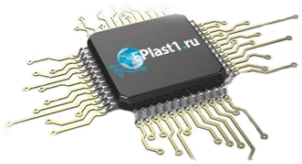
Компания «ЭлектроПласт» предлагает заключение долгосрочных отношений при поставках импортных электронных компонентов на взаимовыгодных условиях!

Наши преимущества:

- Оперативные поставки широкого спектра электронных компонентов отечественного и импортного производства напрямую от производителей и с крупнейших мировых складов;
- Поставка более 17-ти миллионов наименований электронных компонентов;
- Поставка сложных, дефицитных, либо снятых с производства позиций;
- Оперативные сроки поставки под заказ (от 5 рабочих дней);
- Экспресс доставка в любую точку России;
- Техническая поддержка проекта, помощь в подборе аналогов, поставка прототипов;
- Система менеджмента качества сертифицирована по Международному стандарту ISO 9001;
- Лицензия ФСБ на осуществление работ с использованием сведений, составляющих государственную тайну;
- Поставка специализированных компонентов (Xilinx, Altera, Analog Devices, Intersil, Interpoint, Microsemi, Aeroflex, Peregrine, Syfer, Eurofarad, Texas Instrument, Miteq, Cobham, E2V, MA-COM, Hittite, Mini-Circuits,General Dynamics и др.);

Помимо этого, одним из направлений компании «ЭлектроПласт» является направление «Источники питания». Мы предлагаем Вам помощь Конструкторского отдела:

- Подбор оптимального решения, техническое обоснование при выборе компонента;
- Подбор аналогов;
- Консультации по применению компонента;
- Поставка образцов и прототипов;
- Техническая поддержка проекта;
- Защита от снятия компонента с производства.



Как с нами связаться

Телефон: 8 (812) 309 58 32 (многоканальный)
Факс: 8 (812) 320-02-42
Электронная почта: org@eplast1.ru
Адрес: 198099, г. Санкт-Петербург, ул. Калинина, дом 2, корпус 4, литера А.