molex
one company › a world of innovation

This document was generated on 06/08/2010

PLEASE CHECK WWW.MOLEX.COM FOR LATEST PART INFORMATION

Part Number: 0039012060

Status: Active

Overview: minifit_jr

Description: 4.20mm (.165") Pitch Mini-Fit Jr.™ Receptacle Housing, Dual Row, UL 94V-2, 6 Circuits

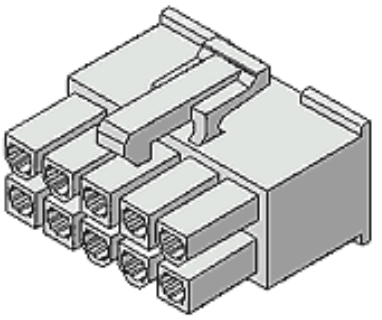

Series

image - Reference only

Documents:

3D Model
Test Summary (PDF)
Drawing (PDF)
Product Specification PS-5556-001 (PDF)
RoHS Certificate of Compliance (PDF)

Agency Certification

CSA	LR19980
TUV	R72081037
UL	E29179

General

Product Family	Crimp Housings
Series	5557
Comments	Current = 13A max. per circuit when header is mated to a receptacle loaded with 45750 series terminals crimped to 16 AWG wire. . See Molex product specification PS-45750-001 for additional current de-rating information.. Glow Wire Equivalent Part Number 50361672
MolexKits	Yes
Overview	minifit_jr
Product Name	Mini-Fit Jr.™

Physical

Breakaway	No
Circuits (maximum)	6
Color - Resin	Natural
Flammability	94V-2
Gender	Female
Glow-Wire Compliant	No
Material - Resin	Nylon
Number of Rows	2
Packaging Type	Bag
Panel Mount	No
Pitch - Mating Interface (in)	0.165 In
Pitch - Mating Interface (mm)	4.20 mm
Pitch - Term. Interface (in)	0.165 In
Pitch - Term. Interface (mm)	4.20 mm
Polarized to Mating Part	Yes
Stackable	No
Temperature Range - Operating	-40°C to +105°C

Electrical

Current - Maximum per Contact	13A

Material Info

Old Part Number	5557-06R

Reference - Drawing Numbers

Packaging Specification	SPK-5557-001
Product Specification	PS-5556-001, RPS-5557-001

EU RoHS
ELV and RoHS Compliant
REACH SVHC
Contains SVHC: No
Halogen-Free Status
Halogen-Free

China RoHS

Need more information on product environmental compliance?

Email productcompliance@molex.com
For a multiple part number RoHS Certificate of Compliance, click here

Please visit the Contact Us section for any non-product compliance questions.

Search Parts in this Series
5557Series

Mates With
5559d , 5566vw , 5566vwo , 5569rdf , 5569rdp , 43810a , 43810b , 43810c , 43810d , 44068a , 44068b , 44068c , 44068d , 44281 , 44472dw , 44472dwo , 87427, 87427r, 87427rf, 42404 , 44474 , 42440 , 43879 , 42475

Use With
41995 Strain Relief

This document was generated on 06/08/2010

PLEASE CHECK WWW.MOLEX.COM FOR LATEST PART INFORMATION

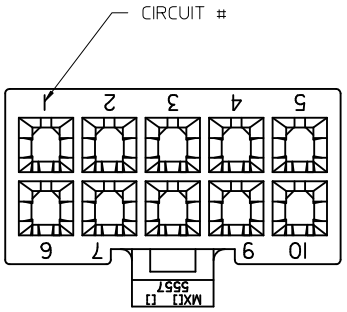

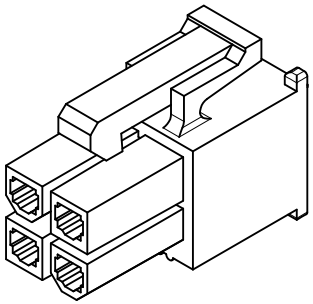

4 CKT SHOWN

NOTES:

1) MATERIAL:
   "BLANK" = NYLON 6/6, 94V-2, COLOR: NATURAL.
   "BL" = NYLON 6/6, 94V-2, COLOR: BLACK.
   "RE"= NYLON 6/6, 94V-2, COLOR: RED.
   "YE"= NYLON 6/6, 94V-2, COLOR: YELLOW
   "210" = NYLON 6/6, 94V-0, COLOR: NATURAL.
   "225" = NYLON (PA6), UL94V-0, COLOR: BLACK, IEC 60335-1, 4th EDITION GLOW WIRE CAPABLE.
   "225N" = NYLON (PA6), UL94V-0, COLOR: WHITE, IEC 60335-1, 4th EDITION GLOW WIRE CAPABLE.
   "400" = NYLON 6/6, 94V-0, COLOR: BLACK.
2) FINISH: NOT APPLICABLE
3) PRODUCT SPECIFICATION: PS-5556-001
4) PACKAGING: BULK
5) PART MATES WITH MOLEX PLUG #5559 AND HEADERS #5566, #5569.
6) PART TO BE USED WITH MOLEX FEMALE TERMINAL #5556.
7) PART IS NOT DESIGNED FOR CURRENT SHARING.
8) CONNECTORS ARE NOT TO BE MATED OR UNMATED WHILE CIRCUITS ARE LIVE.
9) WIRES ARE TO BE DRESSED IN SUCH A MANNER TO ALLOW THE TERMINALS TO FLOAT FREELY IN THE POCKET.
10) PART CONFORMS TO CLASS "B" REQUIREMENTS OF COSMETIC SPECIFICATION PS-45499-002 WITH THE EXCEPTION OF DISCOLORATION, FLASH AND SINK MEET CLASS "C" REQUIREMENTS.

11 TO BE MEASURED AT SURFACE Z

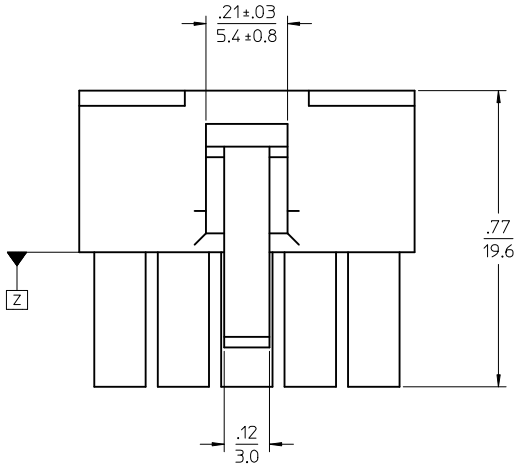

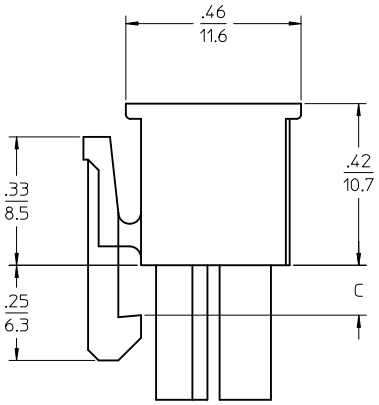

4-24 CKT

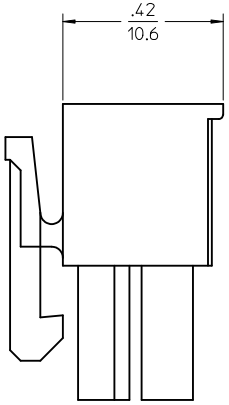

2 CKT ONLY

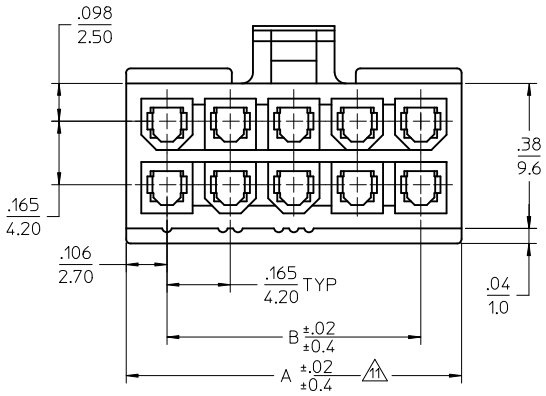

2.031/(51.6)	1.819/(46.2)	.142 (3.6)	24
1.866/(47.4)	1.654/(42.0)		22
1.701/(43.2)	1.488/(37.8)		20
1.535/(39.0)	1.323/(33.6)		18
1.370/(34.8)	1.157/(29.4)	.129 (3.3)	16
1.205/(30.6)	0.992/(25.2)		14
1.039/(26.4)	0.827/(21.0)		12
0.874/(22.2)	0.661/(16.8)		10
0.709/(18.0)	0.496/(12.6)		8
0.543/(13.8)	0.331/(8.4)		6
0.378/(9.6)	0.165/(4.2)		4
0.213/(5.4)	—		2
A	B	C	NO. OF CKTS.

MODIFIED ISO VIEW
EC NO: UCP2010-2566 2010/04/05
DRWN:JJAGUILAR 97/01/08
CHKD:JBELL 2010/04/14
APPR:FSMITH
DESCRIPTION
REV
J4

QUALITY SYMBOLS
▼=0
▽C=0

GENERAL TOLERANCES (UNLESS SPECIFIED)

	mm	INCH
4 PLACES	± --	± ---
3 PLACES	± --	± .010
2 PLACES	± .25	± .015
1 PLACE	± 0.38	± ---
ANGULAR ± 3 °		

DRAFT WHERE APPLICABLE MUST REMAIN WITHIN DIMENSIONS

DIMENSION STYLE: IN/MM
SCALE: 4:1
DESIGN UNITS: METRIC
THIRD ANGLE PROJECTION

DRAWN BY S.MOCHIZUKI	DATE '90/02/22	
CHECKED BY M.FUKUSHIMA	DATE '97/01/08	
APPROVED BY M.FUKUSHIMA	DATE '97/01/08	
MATERIAL NO. SEE SHEET 2	DOCUMENT NO. SD-5557-003	SHEET NO. 1 OF 2

TITLE: NEW MINI FIT CONN REC. HOUSING

molex MOLEX INCORPORATED

SIZE C

THIS DRAWING CONTAINS INFORMATION THAT IS PROPRIETARY TO MOLEX INCORPORATED AND SHOULD NOT BE USED WITHOUT WRITTEN PERMISSION

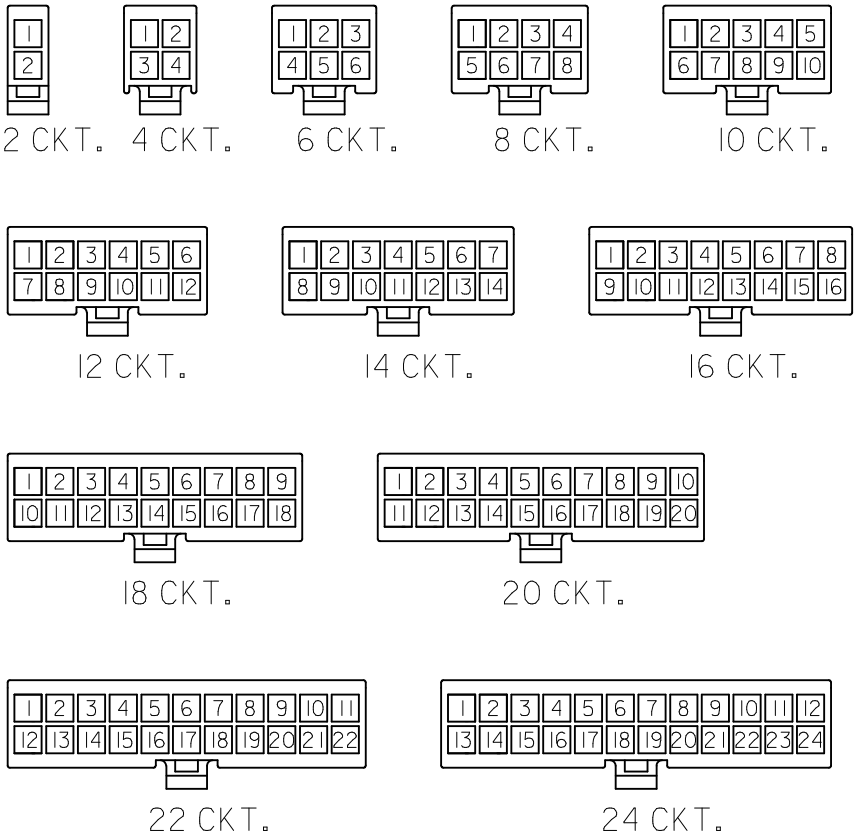

CIRCUIT SIZE LAYOUT

(NOT TO SCALE)

	V-0 GLOW WIRE (BLACK)				V-0 GLOW WIRE (WHITE)		
	50-36-1667	5557-24R-225	24		-	-	24
	26-01-3167	5557-22R-225	22		-	-	22
*	26-01-3166	5557-20R-225	20		-	-	20
	50-36-1668	5557-18R-225	18		-	-	18
	50-36-1669	5557-16R-225	16		-	-	16
	50-36-2293	5557-14R-225	14		-	-	14
	50-36-1674	5557-12R-225	12		-	-	12
	50-36-1671	5557-10R-225	10		-	-	10
	50-36-1713	5557-08R-225	8		-	-	8
	50-36-1672	5557-06R-225	6		-	-	6
	50-30-4461	5557-04R-225	4		50-36-2301	5557-04R-225N	4
	50-36-1673	5557-02R-225	2		-	-	2
	EDP. NO.	ENG. NO.	NO. OF CKTS.		EDP. NO.	ENG. NO.	NO. OF CKTS.

	V-0 (BLACK)				V-0 (NATURAL)		
*	39-03-9242	5557-24R-400	24		39-01-2245	5557-24R-210	24
*	39-03-9222	5557-22R-400	22		39-01-2225	5557-22R-210	22
*	39-03-9202	5557-20R-400	20		39-01-2205	5557-20R-210	20
*	39-03-9182	5557-18R-400	18		39-01-2185	5557-18R-210	18
*	39-03-9162	5557-16R-400	16		39-01-2165	5557-16R-210	16
*	39-03-9142	5557-14R-400	14		39-01-2145	5557-14R-210	14
*	39-03-9122	5557-12R-400	12		39-01-2125	5557-12R-210	12
*	39-03-9102	5557-10R-400	10		39-01-2105	5557-10R-210	10
*	39-03-9082	5557-08R-400	8		39-01-2085	5557-08R-210	8
*	39-03-9062	5557-06R-400	6		39-01-2065	5557-06R-210	6
	39-03-9042	5557-04R-400	4		39-01-2045	5557-04R-210	4
	39-03-9022	5557-02R-400	2		39-01-2025	5557-02R-210	2
	EDP. NO.	ENG. NO.	NO. OF CKTS.		EDP. NO.	ENG. NO.	NO. OF CKTS.

* = CONSULT FACTORY FOR AVAILABILITY.

	V-2 (YELLOW)				V-2 (RED)				V-2 (BLACK)				V-2 (NATURAL)		
			24		-	-	24	*	39-01-3245	5557-24R-BL	24		39-01-2240	5557-24R	24
			22		-	-	22		39-01-3225	5557-22R-BL	22		39-01-2220	5557-22R	22
			20		-	-	20	*	39-01-3205	5557-20R-BL	20		39-01-2200	5557-20R	20
			18		-	-	18	*	39-01-3185	5557-18R-BL	18		39-01-2180	5557-18R	18
			16		-	-	16	*	39-01-3165	5557-16R-BL	16		39-01-2160	5557-16R	16
			14		-	-	14		39-01-3145	5557-14R-BL	14		39-01-2140	5557-14R	14
			12		-	-	12		39-01-3125	5557-12R-BL	12		39-01-2120	5557-12R	12
			10		-	-	10		39-01-3105	5557-10R-BL	10		39-01-2100	5557-10R	10
			8		-	-	8		39-01-3085	5557-08R-BL	8		39-01-2080	5557-08R	8
*	39-02-8061	5557-06R-YE	6		-	-	6		39-01-3065	5557-06R-BL	6		39-01-2060	5557-06R	6
*	39-02-8041	5557-04R-YE	4	*	39-02-8040	5557-04R-RE	4		39-01-3045	5557-04R-BL	4		39-01-2040	5557-04R	4
*	39-02-8021	5557-02R-YE	2		-	-	2		39-01-3025	5557-02R-BL	2		39-01-2020	5557-02R	2
	EDP. NO.	ENG. NO.	NO. OF CKTS.		EDP. NO.	ENG. NO.	NO. OF CKTS.		EDP. NO.	ENG. NO.	NO. OF CKTS.		EDP. NO.	ENG. NO.	NO. OF CKTS.

LEGEND

5557-**R-*

CIRCUIT SIZE

RECEPTACLE

MATERIAL (SEE NOTE 1)

MODIFED CHARTS
EC NO: UCP2010-2566 2010/04/05
DRWN:J JAGUILAR '97/01/08
CH'KD:J BELL 2010/04/14
APPR:F SMITH
DESCRIPTION
REV
J4

QUALITY SYMBOLS
▼=0
▽C=0

GENERAL TOLERANCES (UNLESS SPECIFIED)

	mm	INCH
4 PLACES	± 0.2	± ---
3 PLACES	± 0.3	± ---
2 PLACES	± 0.4	± ---
1 PLACE	± ---	± ---
ANGULAR ± 3 °		

DRAFT WHERE APPLICABLE MUST REMAIN WITHIN DIMENSIONS

DIMENSION STYLE: MM ONLY
SCALE: 1:1
DESIGN UNITS: METRIC
THIRD ANGLE PROJECTION

DRAWN BY: S.MOCHIZUKI DATE: '90/02/22
CHECKED BY: M.FUKUSHIMA DATE: '97/01/08
APPROVED BY: M.FUKUSHIMA DATE: '97/01/08

TITLE: NEW MINI FIT CONN REC. HOUSING

MOLEX INCORPORATED

MATERIAL NO.: SEE CHART
DOCUMENT NO.: SD-5557-003
SHEET NO.: 2 OF 2
SIZE: C

THIS DRAWING CONTAINS INFORMATION THAT IS PROPRIETARY TO MOLEX INCORPORATED AND SHOULD NOT BE USED WITHOUT WRITTEN PERMISSION

Компания «ЭлектроПласт» предлагает заключение долгосрочных отношений при поставках импортных электронных компонентов на взаимовыгодных условиях!

Наши преимущества:

- Оперативные поставки широкого спектра электронных компонентов отечественного и импортного производства напрямую от производителей и с крупнейших мировых складов;
- Поставка более 17-ти миллионов наименований электронных компонентов;
- Поставка сложных, дефицитных, либо снятых с производства позиций;
- Оперативные сроки поставки под заказ (от 5 рабочих дней);
- Экспресс доставка в любую точку России;
- Техническая поддержка проекта, помощь в подборе аналогов, поставка прототипов;
- Система менеджмента качества сертифицирована по Международному стандарту ISO 9001;
- Лицензия ФСБ на осуществление работ с использованием сведений, составляющих государственную тайну;
- Поставка специализированных компонентов (Xilinx, Altera, Analog Devices, Intersil, Interpoint, Microsemi, Aeroflex, Peregrine, Syfer, Eurofarad, Texas Instrument, Miteq, Cobham, E2V, MA-COM, Hittite, Mini-Circuits,General Dynamics и др.);

Помимо этого, одним из направлений компании «ЭлектроПласт» является направление «Источники питания». Мы предлагаем Вам помощь Конструкторского отдела:

- Подбор оптимального решения, техническое обоснование при выборе компонента;
- Подбор аналогов;
- Консультации по применению компонента;
- Поставка образцов и прототипов;
- Техническая поддержка проекта;
- Защита от снятия компонента с производства.

Как с нами связаться

Телефон: 8 (812) 309 58 32 (многоканальный)
Факс: 8 (812) 320-02-42
Электронная почта: org@eplast1.ru
Адрес: 198099, г. Санкт-Петербург, ул. Калинина, дом 2, корпус 4, литера А.