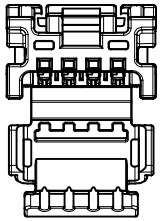

4 CIRCUIT RECEPTACLE
POLARIZATION OPTION A

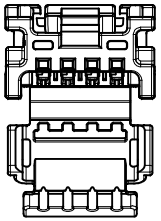

4 CIRCUIT RECEPTACLE
POLARIZATION OPTION B

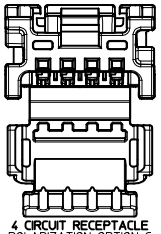

4 CIRCUIT RECEPTACLE
POLARIZATION OPTION C

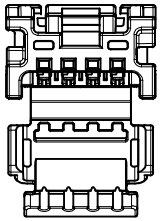

4 CIRCUIT RECEPTACLE
POLARIZATION OPTION D

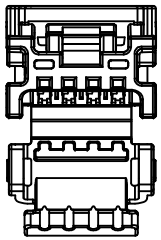

4 CIRCUIT RECEPTACLE BRIDGED
POLARIZATION OPTION A

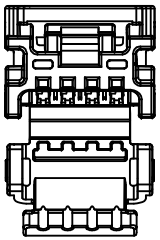

4 CIRCUIT RECEPTACEL BRIDGED
POLARIZATION OPTION B

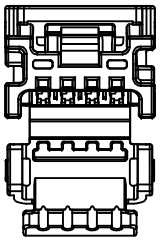

4 CIRCUIT RECEPTACLE BRIDGED
POLARIZATION OPTION C

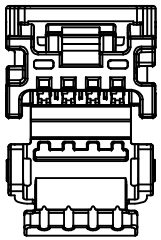

4 CIRCUIT RECEPTACLE BRIDGED
POLARIZATION OPTION D

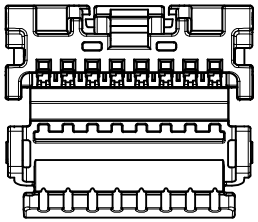

8 CIRCUIT RECEPTACLE
POLARIZATION OPTION A

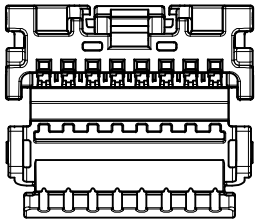

8 CIRCUIT RECEPTACLE
POLARIZATION OPTION B

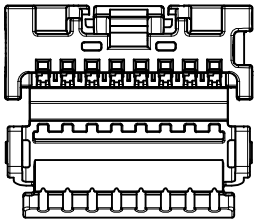

8 CIRCUIT RECEPTACLE
POLARIZATION OPTION C

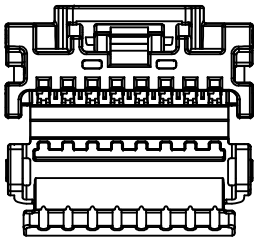

8 CIRCUIT RECEPTACLE BRIDGED
POLARIZATION OPTION A

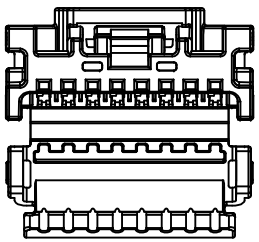

8 CIRCUIT RECEPTACLE BRIDGED
POLARIZATION OPTION B

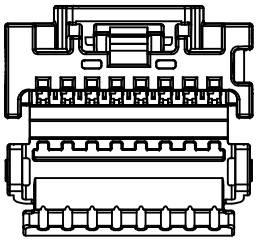

8 CIRCUIT RECEPTACLE BRIDGED
POLARIZATION OPTION C

NOTES: VALID UNLESS OTHERWISE SPECIFIED

1. GENERAL:
   a. APPLICATION SPECIFICATION SEE: AS-34791-020
   b. PRODUCT SPECIFICATION SEE: PS-34971-020
   c. PACKAGING SPECIFICATION PER MOLEX DRAWING: PK-31301-538
   d. PARTS MUST BE IN COMPLIANCE TO MOLEX CHEMICAL SUBSTANCES FOR PRODUCTS AND PACKAGING SPECIFICATION: PS-40000-5015
   e. DATA MUST BE SUBMITTED UNDER THE MOLEX PART NUMBER TO IMDS (COMPANY ID#13255)
   f. FLAMMABILITY REQUIREMENT: PER ISO3795 OR GM3191
      1. BURN RATE 100 mm/MIN MAXIMUM
      2. MATERIAL MUST BE SELF EXTINGUISHING
   g. VISUAL DEFECTS SHALL MEET COSMETIC STANDARD PS-45499-002 (Class B)
   h. FOR TERMINAL USAGE, REFER TO MOLEX SALES DRAWING SD-560023-002.

2. DESIGN - MATERIALS:
   a. MATERIAL: UNFILLED PBT

3. DESIGN - GEOMETRY:
   a. THIS IS A 100% CAD GENERATED PART. THE CAD MATHEMATICAL DATA IS THE MASTER FOR THIS PART. FOR DIMENSIONAL OR ANY INFORMATION NOT SHOWN ON THIS DRAWING, ANALYZE THE CAD MODEL.
   b. GEOMETRIC DIMENSIONS AND TOLERANCES PER ASME Y14.5M - 1994
   c. GENERAL TOLERANCES:
      LINEAR: PER DIN 16901 CODE B FOR PRECISION ENGINEERING
      ANGULAR: ±3°
   d. EDGES AND UNDIMENSIONED DETAILS PER ISO13715
   e. CORNERS SHOWN AS SHARP TO BE R 0.2 MAX
   f. LETTERING SHALL BE 0.1 MAX RAISED IN 0.15 MAX RECESS PAD AND NOT PROTRUDE THE SURFACE. THIS INCLUDES RECYCLING CODE, PLANT AND CAVITY ID, VENDOR ID, CIRCUIT ID, AND PART SERIES NUMBER.
   g. USCAR VERSION NOT TOOLED. PREVIOUS VERSIONS OF LISTED 4CKT AND 8CKT HEADERS ARE TOOLED.REFER TO SD-34792-001 REV B.

HINGE OPEN

4 CIRCUIT RECEPTACLE SHOWN
(AS SHIPPED)

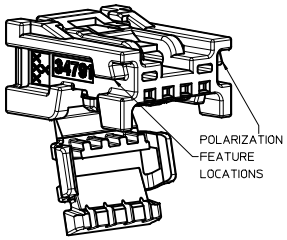

HINGE CLOSED

4 CIRCUIT RECEPTACLE SHOWN
(AS ASSEMBLED)

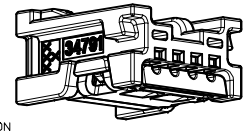

LAST BALLOON ON DRAWING:
12
DELETED BALLOONS:

USCAR UPDATES
EC NO: UAU2013-0532 2012/10/04
DRWN:MYOUNG01 2012/10/29
CHKD:
APPR:RBAUMAN
DESCRIPTION
REV

QUALITY SYMBOLS: =0

GENERAL TOLERANCES (UNLESS SPECIFIED)

	mm	INCH
4 PLACES	±---	±---
3 PLACES	±---	±---
2 PLACES	±---	±---
1 PLACE	±---	±---
ANGULAR	±---°	

DRAFT WHERE APPLICABLE MUST REMAIN WITHIN DIMENSIONS

DIMENSION STYLE: MM ONLY	SCALE: 6:1	DESIGN UNITS: METRIC	THIRD ANGLE PROJECTION
DRAWN BY: JDUNAJ	DATE: 2010/06/24	TITLE: MINI50 SINGLE ROW RECEPTACLE ASSEMBLY SALES DRAWING	
CHECKED BY: BDICK	DATE: 2010/06/24		
APPROVED BY: SMARCEAU	DATE: 2011/11/21	MOLEX INCORPORATED	
MATERIAL NO.: SEE TABLE		DOCUMENT NO.: SD-34791-001	SHEET NO.: 1 OF 3
SIZE: D	THIS DRAWING CONTAINS INFORMATION THAT IS PROPRIETARY TO MOLEX INCORPORATED AND SHOULD NOT BE USED WITHOUT WRITTEN PERMISSION		

tb_frame_D_P_AM_T
Rev. F 2009/06/17

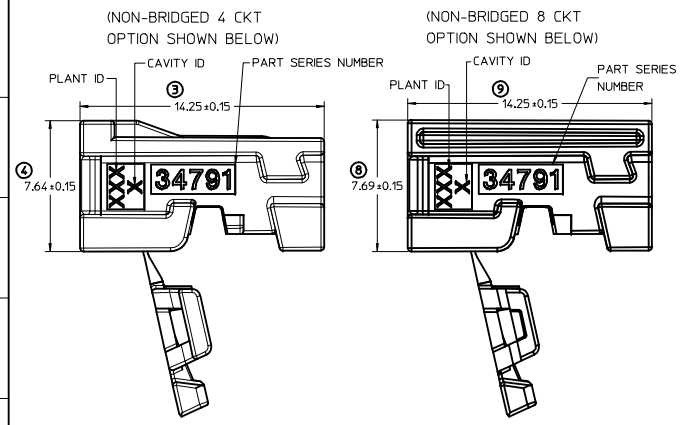

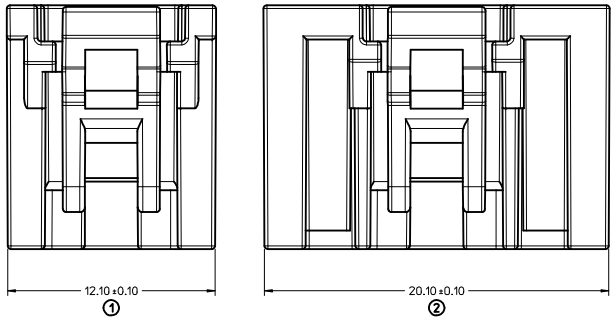

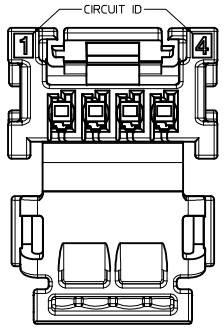

4 CKT RECEPTACLE SHOWN BELOW.
8 CKT RECEPTACLE HAS SIMILAR
CIRCUIT ID LOCATION.

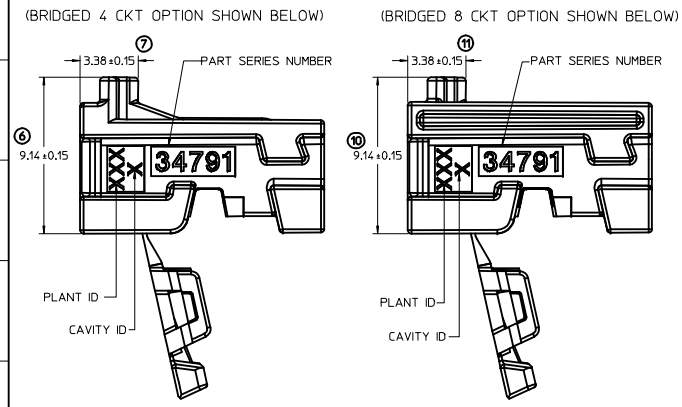

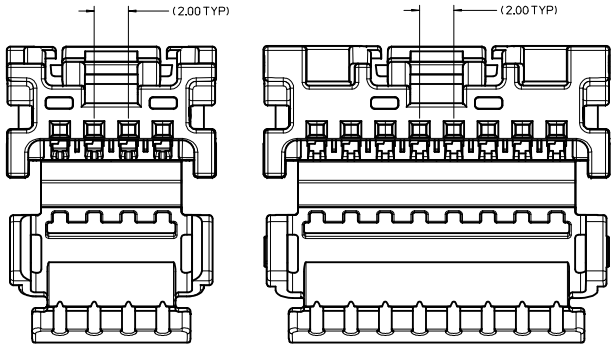

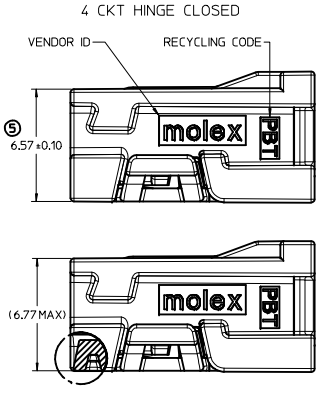

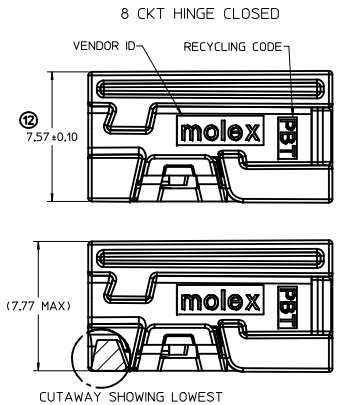

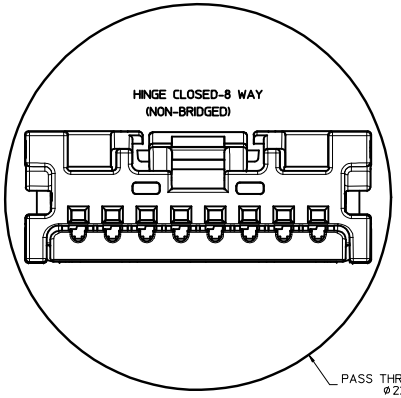

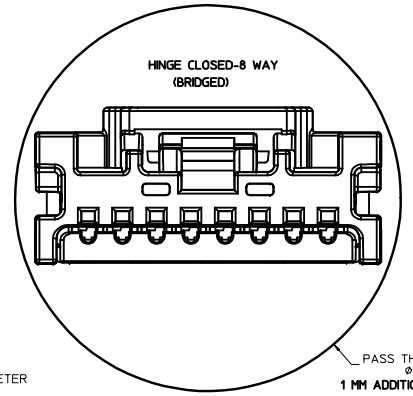

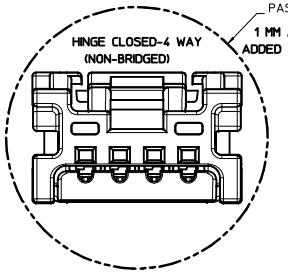

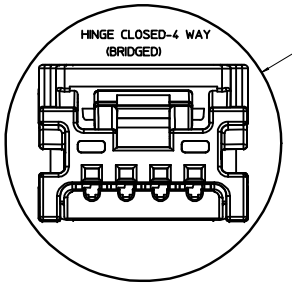

USCAR UPDATES
EC NO: UAU2013-0532 2012/10/04
DRWN:MYOUNG01 2012/10/29
CHKD:
APPR:RBAUMAN
DESCRIPTION
REV

QUALITY SYMBOLS
4 PLACES =0
3 PLACES =0
2 PLACES =0
1 PLACE =0

GENERAL TOLERANCES (UNLESS SPECIFIED)

	mm	INCH
4 PLACES	± ---	± ---
3 PLACES	± ---	± ---
2 PLACES	± ---	± ---
1 PLACE	± ---	± ---
ANGULAR	± ---°	

DRAFT WHERE APPLICABLE MUST REMAIN WITHIN DIMENSIONS

DIMENSION STYLE: MM ONLY
SCALE: 7:1
DESIGN UNITS: METRIC
THIRD ANGLE PROJECTION

DRAWN BY: JDUNAJ DATE: 2010/06/24
CHECKED BY: BDICK DATE: 2010/06/24
APPROVED BY: SMARCEAU DATE: 2011/11/21

TITLE: MINI50 SINGLE ROW RECEPTACLE ASSEMBLY SALES DRAWING

molex MOLEX INCORPORATED

MATERIAL NO.: SEE TABLE
DOCUMENT NO.: SD-34791-001
SHEET NO.: 2 OF 3
SIZE: D

THIS DRAWING CONTAINS INFORMATION THAT IS PROPRIETARY TO MOLEX INCORPORATED AND SHOULD NOT BE USED WITHOUT WRITTEN PERMISSION

MINI50 RECEPTACLE ASSEMBLIES

MATERIAL NUMBER BULK PACKAGING PK-31301-538	LOCK BRIDGE OPTION	CONFIGURATION	CIRCUIT	POL	COLOR	TOOLED	MATING COMPONENT								
							SURFACE MOUNT TECHNOLOGY (SMT) HEADER			VERTICAL THRU HOLE HEADER			RIGHT ANGLE THRU HOLE HEADERS		
							TAPE AND REEL PACKAGING PK-31301-786	TUBE PACKAGING PK-31301-688	TOOLED	TRAY PACKAGING PK-31301-440	TUBE PACKAGING PK-31301-688	TOOLED *SEE NOTE 3g.	TRAY PACKAGING PK-31301-440	TUBE PACKAGING PK-31301-688	TOOLED *SEE NOTE 3g.
34791-0040	NO	USCAR COMPATIBLE	4	A	BLACK	YES	34912-8040	34912-9040	YES	34792-0040	34792-9040	NO	34793-0040	34793-9040	NO
34791-0041	NO	USCAR COMPATIBLE	4	B	GRAY	YES	34912-8041	34912-9041	YES	34792-0041	34792-9041	NO	34793-0041	34793-9041	NO
34791-0042	NO	USCAR COMPATIBLE	4	C	BROWN	YES	34912-8042	34912-9042	YES	34792-0042	34792-9042	NO	34793-0042	34793-9042	NO
34791-0043	NO	USCAR COMPATIBLE	4	D	GREEN	YES	34912-8043	34912-9043	YES	34792-0043	34792-9043	NO	34793-0043	34793-9043	NO
34791-0080	NO	USCAR COMPATIBLE	8	A	BLACK	NO	34912-8080	34912-9080	NO	34792-0080	34792-9080	NO	34793-0080	34793-9080	NO
34791-0081	NO	USCAR COMPATIBLE	8	B	GRAY	NO	34912-8081	34912-9081	NO	34792-0081	34792-9081	NO	34793-0081	34793-9081	NO
34791-0082	NO	USCAR COMPATIBLE	8	C	BROWN	NO	34912-8082	34912-9082	NO	34792-0082	34792-9082	NO	34793-0082	34793-9082	NO
34791-0140	YES	USCAR COMPATIBLE	4	A	BLACK	NO	34912-8040	34912-9040	YES	34792-0040	34792-9040	NO	34793-0040	34793-9040	NO
34791-0141	YES	USCAR COMPATIBLE	4	B	GRAY	NO	34912-8041	34912-9041	YES	34792-0041	34792-9041	NO	34793-0041	34793-9041	NO
34791-0142	YES	USCAR COMPATIBLE	4	C	BROWN	NO	34912-8042	34912-9042	YES	34792-0042	34792-9042	NO	34793-0042	34793-9042	NO
34791-0143	YES	USCAR COMPATIBLE	4	D	GREEN	NO	34912-8043	34912-9043	YES	34792-0043	34792-9043	NO	34793-0043	34793-9043	NO
34791-0180	YES	USCAR COMPATIBLE	8	A	BLACK	NO	34912-8080	34912-9080	NO	34792-0080	34792-9080	NO	34793-0080	34793-9080	NO
34791-0181	YES	USCAR COMPATIBLE	8	B	GRAY	NO	34912-8081	34912-9081	NO	34792-0081	34792-9081	NO	34793-0081	34793-9081	NO
34791-0182	YES	USCAR COMPATIBLE	8	C	BROWN	NO	34912-8082	34912-082	NO	34792-0082	34792-9082	NO	34793-0082	34793-9082	NO

CTX50 UNSEALED RECEPTACLE TERMINALS

PART NUMBER		MATERIAL	WIRE GAGE (mm²)	GRIP
D-WIND (LEFT PAYOFF)	B-WIND (RIGHT PAYOFF)			
560023-0421	560023-0423	COPPER ALLOY	0.22 - 0.35	MEDIUM
560023-0422	560023-0424	COPPER ALLOY	0.08 - 0.13	SMALL

USCAR UPDATES
EC NO: UAU2013-0532 2012/10/04
DRWN:MYOUNG01 2012/10/29
CHKD:
APPR:RBAUMAN
DESCRIPTION
REV

QUALITY SYMBOLS
=0
=0
=0

GENERAL TOLERANCES (UNLESS SPECIFIED)

	mm	INCH
4 PLACES	± ---	± ---
3 PLACES	± ---	± ---
2 PLACES	± ---	± ---
1 PLACE	± ---	± ---
0 PLACE	±	± ---
ANGULAR ±---°		

DRAFT WHERE APPLICABLE MUST REMAIN WITHIN DIMENSIONS

DIMENSION STYLE: MM ONLY
SCALE: 5:1
DESIGN UNITS: METRIC
THIRD ANGLE PROJECTION

DRAWN BY: JDUNAJ DATE: 2010/06/24
CHECKED BY: BDICK DATE: 2010/06/24
APPROVED BY: SMARCEAU DATE: 2011/11/21
MATERIAL NO.: SEE TABLE

TITLE: MINI50 SINGLE ROW RECEPTACLE ASSEMBLY SALES DRAWING

molex MOLEX INCORPORATED

DOCUMENT NO.: SD-34791-001
SHEET NO.: 3 OF 3

SIZE: D

THIS DRAWING CONTAINS INFORMATION THAT IS PROPRIETARY TO MOLEX INCORPORATED AND SHOULD NOT BE USED WITHOUT WRITTEN PERMISSION

Компания «ЭлектроПласт» предлагает заключение долгосрочных отношений при поставках импортных электронных компонентов на взаимовыгодных условиях!

Наши преимущества:

- Оперативные поставки широкого спектра электронных компонентов отечественного и импортного производства напрямую от производителей и с крупнейших мировых складов;
- Поставка более 17-ти миллионов наименований электронных компонентов;
- Поставка сложных, дефицитных, либо снятых с производства позиций;
- Оперативные сроки поставки под заказ (от 5 рабочих дней);
- Экспресс доставка в любую точку России;
- Техническая поддержка проекта, помощь в подборе аналогов, поставка прототипов;
- Система менеджмента качества сертифицирована по Международному стандарту ISO 9001;
- Лицензия ФСБ на осуществление работ с использованием сведений, составляющих государственную тайну;
- Поставка специализированных компонентов (Xilinx, Altera, Analog Devices, Intersil, Interpoint, Microsemi, Aeroflex, Peregrine, Syfer, Eurofarad, Texas Instrument, Miteq, Cobham, E2V, MA-COM, Hittite, Mini-Circuits,General Dynamics и др.);

Помимо этого, одним из направлений компании «ЭлектроПласт» является направление «Источники питания». Мы предлагаем Вам помощь Конструкторского отдела:

- Подбор оптимального решения, техническое обоснование при выборе компонента;
- Подбор аналогов;
- Консультации по применению компонента;
- Поставка образцов и прототипов;
- Техническая поддержка проекта;
- Защита от снятия компонента с производства.

Как с нами связаться

Телефон: 8 (812) 309 58 32 (многоканальный)
Факс: 8 (812) 320-02-42
Электронная почта: org@eplast1.ru
Адрес: 198099, г. Санкт-Петербург, ул. Калинина, дом 2, корпус 4, литера А.