Amphenol

Amphenol Preferred Parts Catalogue

Amphenol

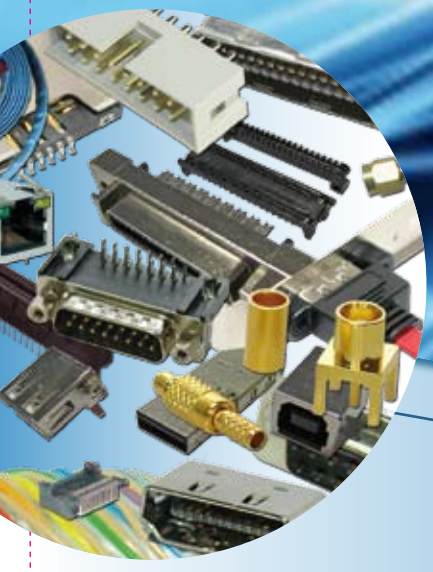

Amphenol Preferred Parts Catalogue

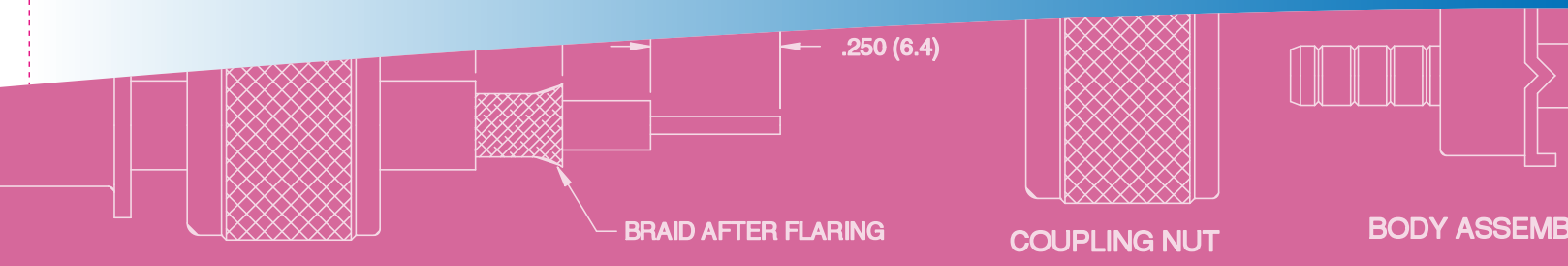

Amphenol Corporation

Amphenol was founded in 1932. Today the company is one of the largest manufacturers of interconnect products in the world serving towards 8 major markets: Aerospace/Military, Automotive, Broadband Communications, Industrial, Medical, Mobile Networks, Mobile Devices and Information Technology & Data Communication.
The company designs, manufactures and markets electrical, electronic and fiber optic connectors, interconnect systems like cable assemblies and coaxial and special cable. Amphenol is headquartered in Connecticut, USA and employs more than 33.000 people world wide. Amphenol is a truly global company with more then 55% of its workforce in the so called low labor countries. The company serves all continents with over 85 operations.

In Europe Amphenol supports the InfoCom product portfolio from Houten, the Netherlands. An experienced staff of engineers, marketeers and sales people support the dynamic market for Wireless Communication, Computer- and Internet Technology, Industrial- and Medical market with RF products, I/O connectors, switches and cable assemblies, Commercial connectors and cable assemblies for medium and high speed applications, High Speed Ribbon Cables, Standard Ribbon Cables and a wide range of Fiber Optic products.

Amphenol InfoCom is a strong technology driven partner in an environment which constantly demands first class products at the lowest possible prices and delivered on time.

Table of contents

Page 4	Markets we serve
Page 6	D-Subminiatures
Page 51	Filtered D-Sub
Page 59	Modular Jacks
Page 66	USB & Firewire
Page 69	High Speed connectors
Page 73	SAS & SATA
Page 77	HDMI
Page 79	Mini Ribbon MD5
Page 84	Micro Ribbon
Page 87	Header and Sockets
Page 92	PCI-Express
Page 94	Memory Card Connector
Page 105	RF
Page 120	SPECTRA-STRIP
Page 125	Antennas
Page 130	Cable assemblies
Page 144	Part Number Index

MARKETS WE SERVE

Mobile Networks

Amphenol is a leading global interconnect solutions provider to the wireless infrastructure market, including applications such as cellular base stations, radio links, mobile switches, wireless routers, wireless local loop and cellsite antenna systems, combiners, transceivers, filters and amplifiers. Amphenol offers a wide product portfolio for every wireless standard and generation radio technology, including 2.5G, 3G, Wimax, and future IP solutions. The product range includes RF, low-frequency, power and fiber-optic connectors and cable assemblies, antennas, backplane interconnect systems, and power distribution systems.

Mobile Devices

Amphenol provides a broad range of components with presence on more than 50% of the world's annual mobile phone production. Amphenol manufactures essentially all of the interconnect devices found in mobile phones, PDA's and other mobile devices. The broad product offering includes antennas, RF switches/plugs, navigation keys/side keys, microphone/speaker/vibra connectors, LCD connectors, board-to-board connectors, SIM/MMC/SD sockets, battery connectors, I/O system connectors, charger (plug and socket) connectors, and electromechanical hinges. Our capability for high-volume production of these technically demanding, miniturized products, combined with our speed of new product introduction, is a critical factor for our success in this market.

Information Technology and Data Communication

Amphenol is a global provider of interconnect solutions to designers and manufactures of Internet-enabling systems. Amphenol's range of offerings in electrical and optical cable, cable assembly, connector products, and backplane interconnect systems span applications in PC's, servers, storage systems, optical and copper networking equipment, modems, hubs, routers, switches, media display systems, and Internet appliances. With our design creativity and cost-effectiveness, Amphenol leads the way in interconnect development for Internet equipment, infrastructure, enterprise networks, and appliances. Whether industry standard or application-specific designs are required, Amphenol provides customers with products that enable performance at the leading edge of next-generation high-speed technology.

Automotive

Amphenol is a leading supplier of interconnect systems for automotive safety devices. As the inventor of airbag and seatbelt pretensioner interconnect systems, Amphenol has defined the standards in this industry and continues its innovative leadership. In addition, Amphenol provides innovative connectors for car entertainment, communication, telematic modules, and interconnect solutions by using the FAKRA standard for audio, cellular phone and navigation systems. For selected applications such as engine control, sensors, and actuators, as well as auxiliary motors, Amphenol provides wiring components, custom specific over molded devices, and harness assemblies. Amphenol Automotive's core competences include application specific automotive interconnect solutions requiring a high degree of engineering and system integration.

Broadband Communications

Amphenol is a world leader in broadband cable television communication products with industry-leading engineering, design, and manufacturing expertise. Amphenol offers a broad range of coaxial cable products to service the growing broadband market, from customer premises cables and interconnect devices to distribution cable and fiber optic components. Amphenol is also a world leader in coaxial connectors, and has products deployed on a wide range of broadband equipment from sophisticated head-end equipment to digital set-top boxes, high-speed cable modems, and DBS interface devices. Amphenol leads the way in broadband communications.

Industrial

Amphenol is a technology leader in the design, manufacture, and supply of high performance interconnect systems for a broad range of industrial applications, including medical equipment, factory automation, heavy equipment, instrumentaion, motion control, rail mass transportion, and natural resource exploration. Amphenol's core competencies include application specific industrial interconnect solutions utilizing integrated assemblies with flexible printed circuits as well as high-power interconnects requiring a high degree of engineering and system integration. Our innovative solutions facilitate the increasing demands of embedded computing and power distribution.

Military & Aerospace

Amphenol is the world leader in the design, manufacture, and supply of high performance interconnect systems for military and commercial aerospace harsh environment applications. Amphenol provides an unparalleled product breadth, from military spec connectors to customized high-speed board level interconnects; from flexible to rigid printed circuit boards; from backplane systems to completely integrated assemblies. Key markets supported are avionics, radar, communications, ordnance, missiles, engines, ground vehicles and tanks, space, and all levels of aviation. Amphenol is a technology innovator that designs to meet customers needs from program inception.

Medical

From critical components to complete electronic packages, Amphenol delivers custom and standard medical interconnect solutions. Combining unmatched product breadth, engineering expertise, and global manufacturing, Amphenol provides interconnect solutions where, when, and how its customers need them. In applications ranging from patient monitoring and imaging to therapy delivery, Amphenol Medical Solutions empower leading edge medical devices. Amphenol Medical Solutions is the transformative power of connectivity.

D-SUBMINIATURES

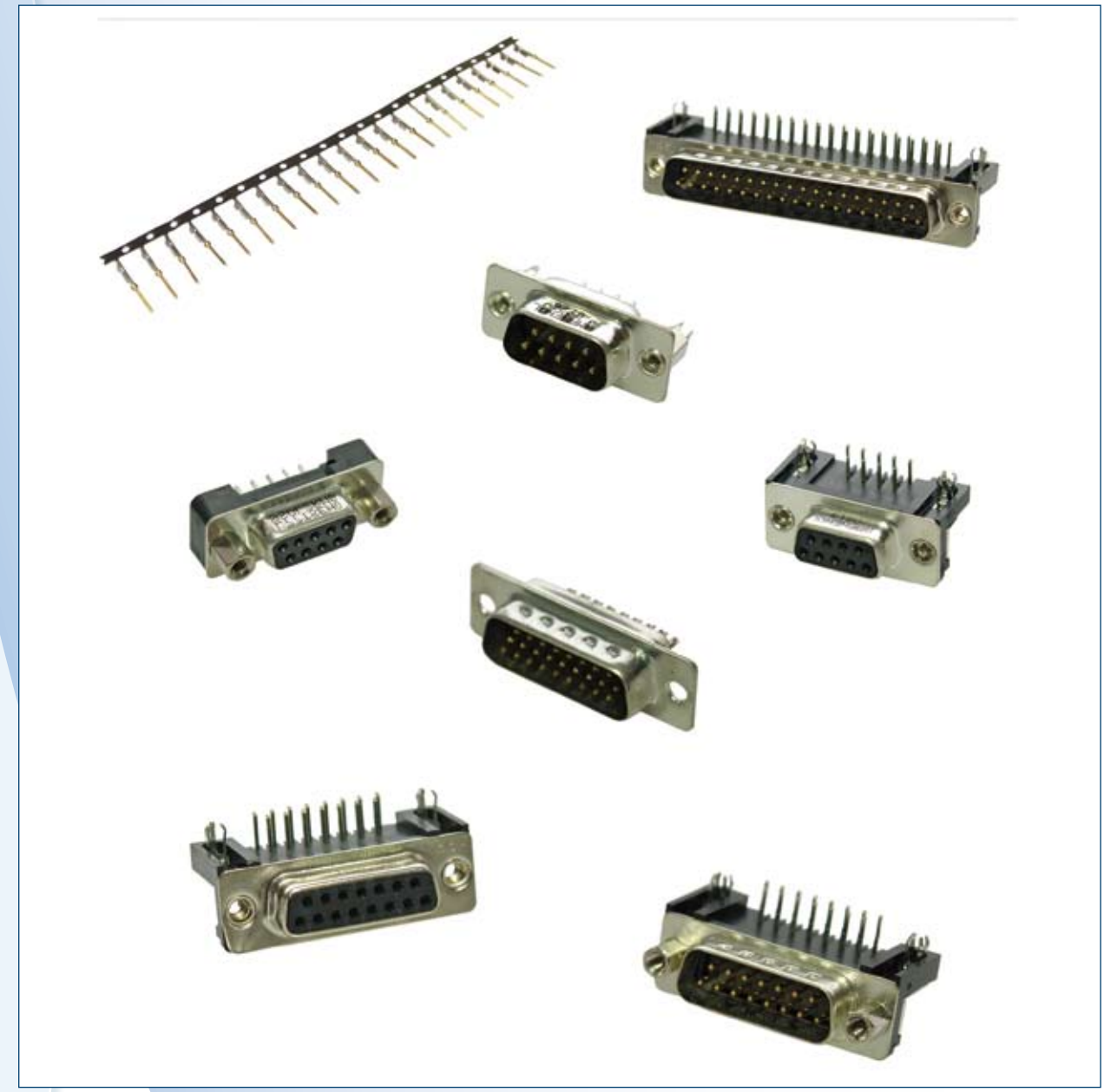

PLUG SOLDER CUP

Specifications:

- Contact Resistance: 20 mΩ Max
- Insulator Resistance: 1000 MΩ Min at 500V DC
- Current Rating: 5A
- Dielectric Withstanding Voltage: 1000V AC for 1 minute
- Operating Temperature: -55°c to +105°c

Materials:

- Contact: Brass
- Housing: Glass-filled thermoplastic, UL94V-0
- Shell: Steel, Tin plated

Dimensions:

Nb of Contacts	A	B	C
9	30,89	24,99	16,92
15	39,10	33,32	25,25
25	53,09	47,04	38,96
37	69,40	63,50	55,42

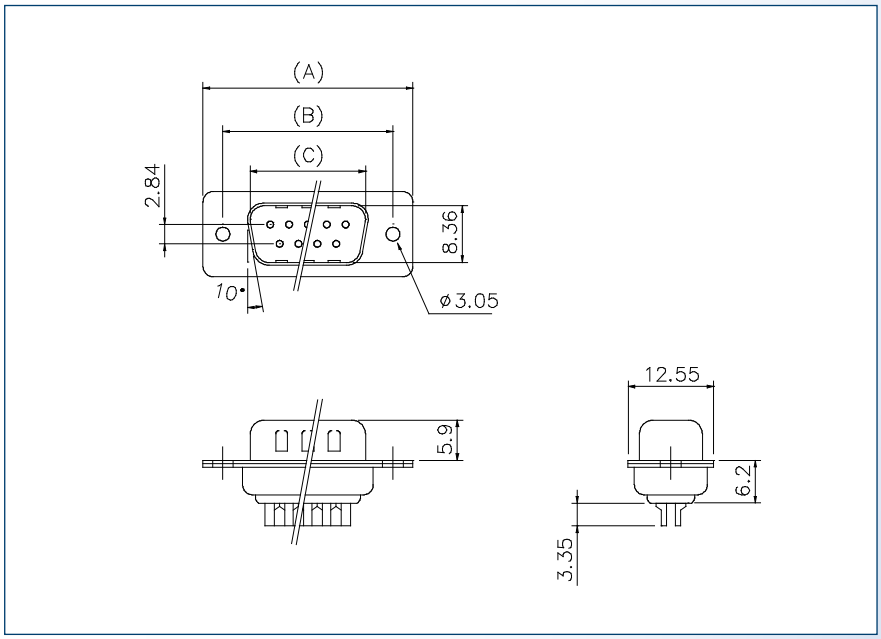

Part Numbers :

Nb of Contacts	Performance Level 3 (flash Gold)	Performance Level 2 (0,38 µm Gold)	Performance Level 1 (0,76 µm Gold)
9	L717SDE09P	L777SDE09P	L717SDE09PC309
15	L717SDA15P	L777SDA15P	L717SDA15PC309
25	L717SDB25P	L777SDB25P	L717SDB25PC309
37	L717SDC37P	L777SDC37P	L717SDC37PC309

Performance levels as per DIN 41 652/IEC 807-3

RECEPTACLE SOLDER CUP

Specifications:

- Contact Resistance: 20 mΩ Max
- Insulator Resistance: 1000 MΩ Min at 500V DC
- Current Rating: 5A
- Dielectric Withstanding Voltage: 1000V AC for 1 minute
- Operating Temperature: -55°c to +105°c

Materials:

- Contact: Bronze
- Housing: Glass-filled thermoplastic, UL94V-0
- Shell: Steel, Tin plated

Dimensions:

Nb of Contacts	A	B	C
9	30,89	24,99	16,33
15	39,10	33,32	24,66
25	53,09	47,04	38,38
37	69,40	63,50	54,84

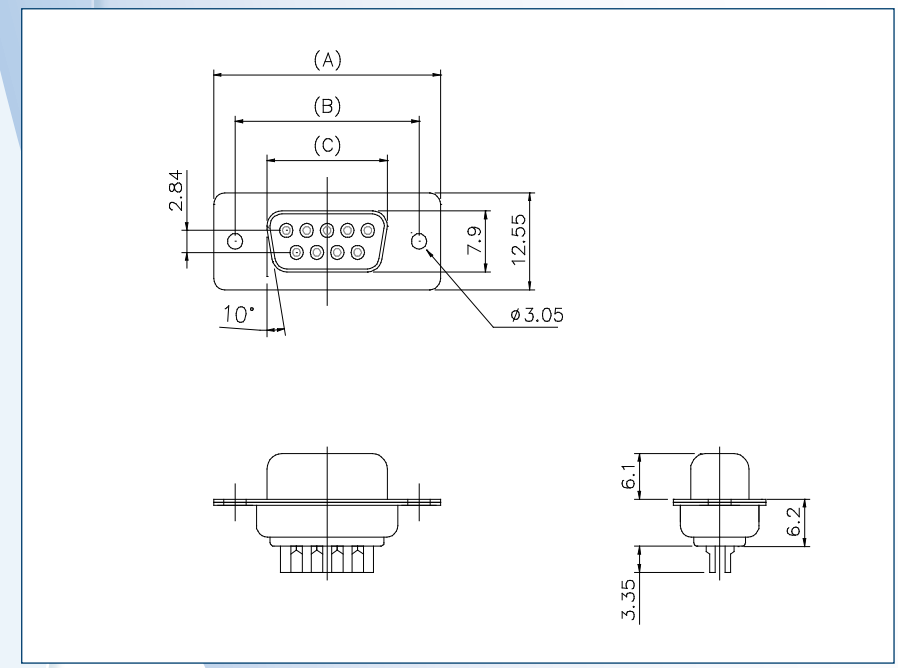

Part Numbers:

Nb of Contacts	Performance Level 3 (flash Gold)	Performance Level 2 (0,38 µm Gold)	Performance Level 1 (0,76 µm Gold)
9	L77SDE09S	L177SDE09S	L77SDE09SC309
15	L77SDA15S	L177SDA15S	L77SDA15SC309
25	L77SDB25S	L177SDB25S	L77SDB25SC309
37	L77SDC37S	L177SDC37S	L77SDC37SC309

Performance levels as per DIN 41 652/IEC 807-3

PLUG CRIMP

Specifications:

- Contact Resistance: 20 mΩ Max
- Insulator Resistance: 1000 MΩ Min at 500V DC
- Current Rating: 3A
- Dielectric Withstanding Voltage: 1000V AC for 1 minute
- Operating Temperature: -55°c to +105°c

Materials:

- Housing: Glass-filled thermoplastic, UL94V-0
- Shell: Steel, Tin plated

Dimensions:

Nb of Contacts	A	B	C
9	30,89	24,99	16,92
15	39,10	33,32	25,25
25	53,09	47,04	38,96
37	69,40	63,50	55,42

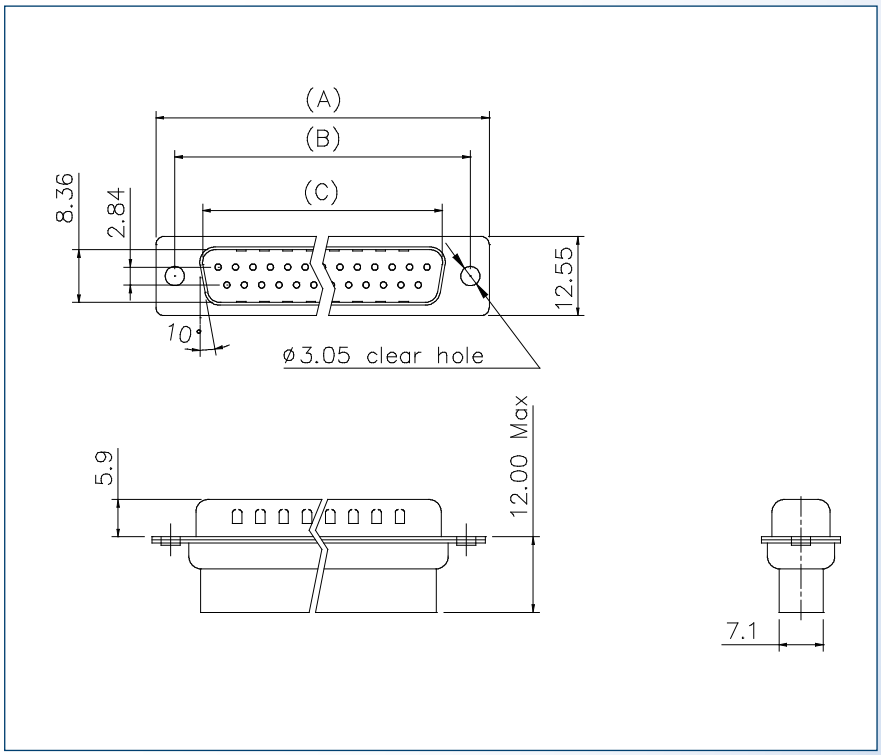

Part Numbers:

Nb of Contacts	Part Number
9	L777RRE09P
15	L777RRA15P
25	L777RRB25P
37	L777RRC37P

RECEPTACLE CRIMP

Specifications:

- Contact Resistance: 20 mΩ Max
- Insulator Resistance: 1000 MΩ Min at 500V DC
- Current Rating: 3A
- Dielectric Withstanding Voltage: 1000V AC for 1 minute
- Operating Temperature: -55°c to +105°c

Materials:

- Housing: Glass-filled thermoplastic, UL94V-0
- Shell: Steel, Tin plated

Dimensions:

Nb of Contacts	A	B	C
9	30,89	24,99	16,33
15	39,10	33,32	24,66
25	53,09	47,04	38,38
37	69,40	63,50	54,84

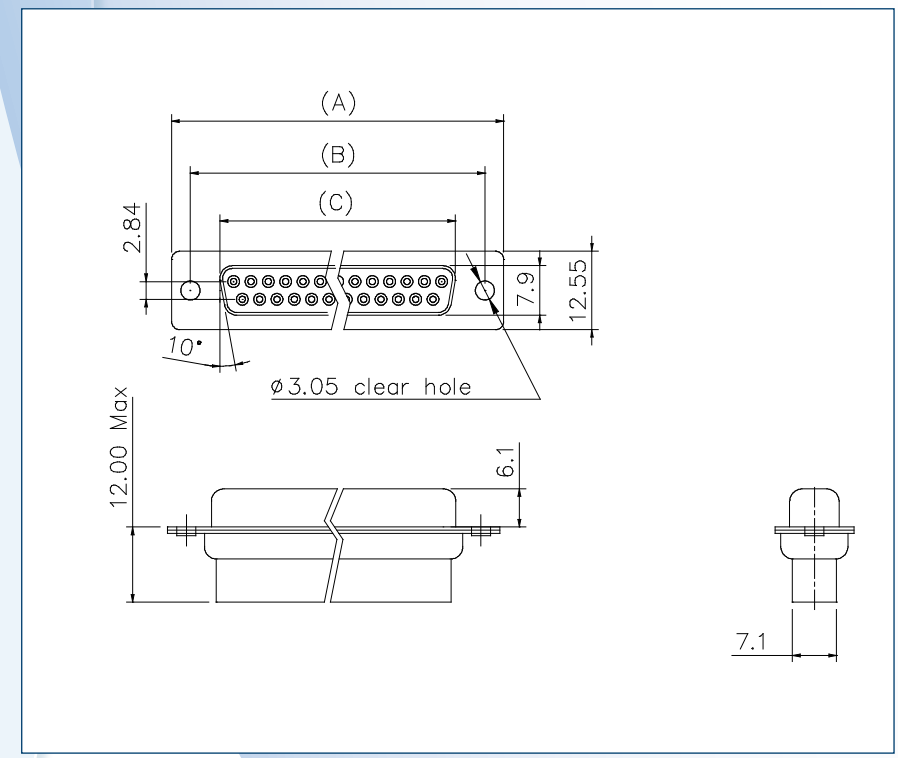

Part Numbers :

Nb of Contacts	Part Number
9	L177RRE09S
15	L177RRA15S
25	L177RRB25S
37	L177RRC37S

MALE CRIMP CONTACT

Specifications:

Wire gage: AWG 20-24 & 24-28, solid or stranded wires

Material:

Brass

Dimensions:

Wire Gage	A	B
20-24	2,5	1,9
24-28	1,7	1,5

For detailed specifications check www.amphenolinfocom.eu

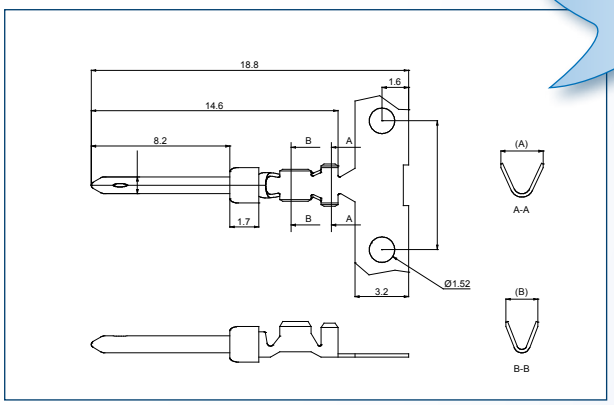

Part Numbers :

Wire gage	Packaging	Plating	Performance Level 3 (flash Gold)	Performance Level 2 (0,38 µm Gold)	Performance Level 1 (0,76 µm Gold)
20-24	100 cts Bulk	Full Gold	L17RRD1M01100	L17RRD1M02100	L17RRD1M04100
		Selective	L17RRD1M11100	L17RRD1M12100	L17RRD1M14100
	reel of 400 cts	Full Gold	L17RRD1M01400	L17RRD1M02400	L17RRD1M04400
		Selective	L17RRD1M11400	L17RRD1M12400	L17RRD1M14400
	reel of 2000 cts	Full Gold	L17RRD1M012K	L17RRD1M022K	L17RRD1M042K
		Selective	L17RRD1M112K	L17RRD1M122K	L17RRD1M142K
	reel of 10000 cts	Full Gold	L17RRD1M0110K	L17RRD1M0210K	L17RRD1M0410K
		Selective	L17RRD1M1110K	L17RRD1M1210K	L17RRD1M1410K
24-28	100 cts Bulk	Full Gold	L17RRD2M01100	L17RRD2M02100	L17RRD2M04100
		Selective	L17RRD2M11100	L17RRD2M12100	L17RRD2M14100
	reel of 400 cts	Full Gold	L17RRD2M01400	L17RRD2M02400	L17RRD2M04400
		Selective	L17RRD2M11400	L17RRD2M12400	L17RRD2M14400
	reel of 2000 cts	Full Gold	L17RRD2M012K	L17RRD2M022K	L17RRD2M042K
		Sllective	L17RRD2M112K	L17RRD2M122K	L17RRD2M142K
	reel of 10000 cts	Full Gold	L17RRD2M0110K	L17RRD2M0210K	L17RRD2M0410K
		Sllective	L17RRD2M1110K	L17RRD2M1210K	L17RRD2M1410K

Performance levels as per DIN 41 652/IEC 807-3

FEMALE CRIMP CONTACT

Specifications:

Wire gage: AWG 24-28, solid or stranded wires

Material:

Bronze

Dimensions:

Wire Gage	A	B
20-24	2,5	1,9
24-28	1,7	1,5

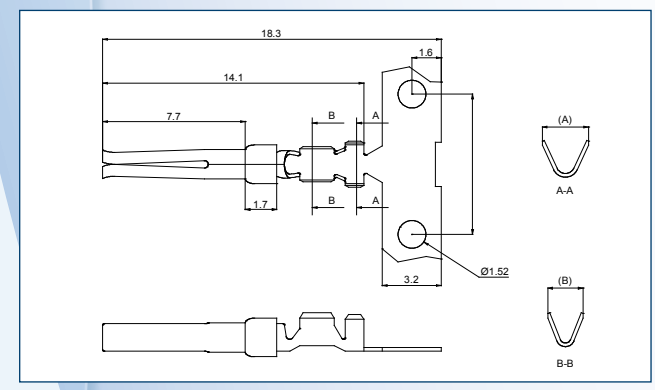

Part Numbers :

Wire gage	Packaging	Plating	Performance Level 3 (flash Gold)	Performance Level 2 (0,38 µm Gold)	Performance Level 1 (0,76 µm Gold)
20-24	100 cts Bulk	Full Gold	L17RRD1F01100	L17RRD1F02100	L17RRD1F04100
		Selective	L17RRD1F11100	L17RRD1F12100	L17RRD1F14100
	reel of 400 cts	Full Gold	L17RRD1F01400	L17RRD1F02400	L17RRD1F04400
		Selective	L17RRD1F11400	L17RRD1F12400	L17RRD1F14400
	reel of 2000 cts	Full Gold	L17RRD1F012K	L17RRD1F022K	L17RRD1F042K
		Selective	L17RRD1F112K	L17RRD1F122K	L17RRD1F142K
	reel of 10000 cts	Full Gold	L17RRD1F0110K	L17RRD1F0210K	L17RRD1F0410K
		Selective	L17RRD1F1110K	L17RRD1F1210K	L17RRD1F1410K
24-28	100 cts Bulk	Full Gold	L17RRD2F01100	L17RRD2F02100	L17RRD2F04100
		Selective	L17RRD2F11100	L17RRD2F12100	L17RRD2F14100
	reel of 400 cts	Full Gold	L17RRD2F01400	L17RRD2F02400	L17RRD2F04400
		Selective	L17RRD2F11400	L17RRD2F12400	L17RRD2F14400
	reel of 2000 cts	Full Gold	L17RRD2F012K	L17RRD2F022K	L17RRD2F042K
		Selective	L17RRD2F112K	L17RRD2F122K	L17RRD2F142K
	reel of 10000 cts	Full Gold	L17RRD2F0110K	L17RRD2F0210K	L17RRD2F0410K
		Selective	L17RRD2F1110K	L17RRD2F1210K	L17RRD2F1410K

Performance levels as per DIN 41 652/IEC 807-3

PLUG FLAT RIBBON IDC

Specifications:

- Contact Resistance: 20 mΩ Max
- Insulator Resistance: 1000 MΩ Min at 500V DC
- Current Rating: 5A
- Dielectric Withstanding Voltage: 1000V AC for 1 minute
- Operating Temperature: -55°c to +105°c

Materials:

- Contact: Brass
- Housing: Glass-filled thermoplastic, UL94V-0
- Shell: Steel, Tin plated

Dimensions:

Nb of Contacts	A	B	C	D
9	30,89	24,99	16,92	10,16
15	39,10	33,32	25,25	17,78
25	53,09	47,04	38,96	30,48
37	69,40	63,50	55,42	45,72

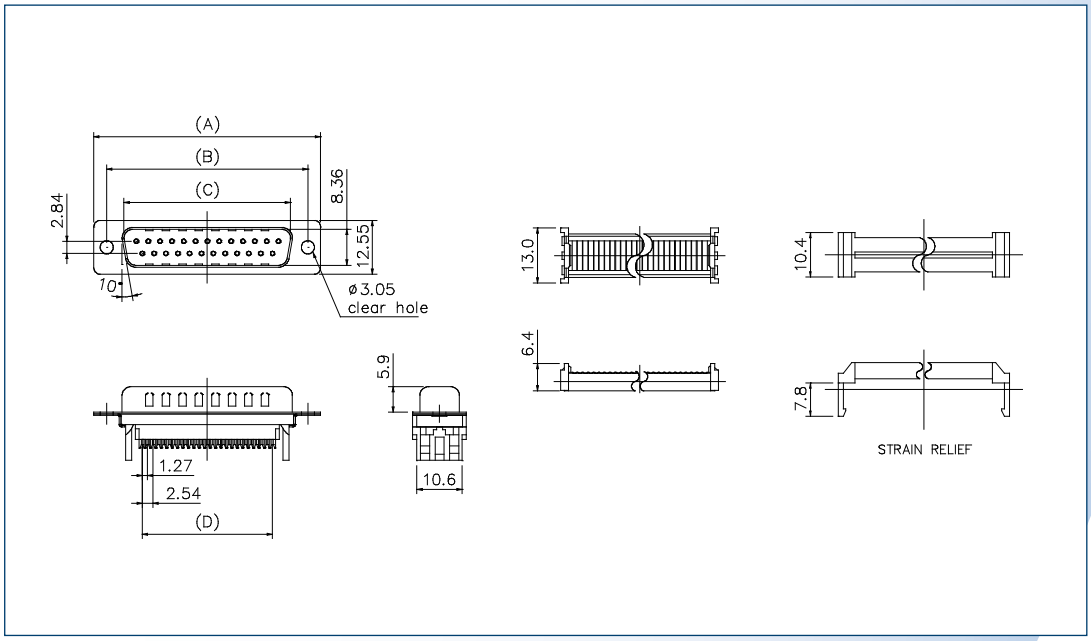

Part Numbers :

Nb of Contacts	Performance Level 3 (flash Gold)	Performance Level 2 (0,38 µm Gold)	Performance Level 1 (0,76 µm Gold)
9	L17DEFRA09P	L117DEFRA09P	L17DEFRA09PC309
15	L17DAFRA15P	L117DAFRA15P	L17DAFRA15PC309
25	L17DBFRA25P	L117DBFRA25P	L17DBFRA25PC309
37	L17DCFRA37P	L117DCFRA37P	L17DCFRA37PC309

Performance levels as per DIN 41 652/IEC 807-3

RECEPTACLE FLAT RIBBON IDC

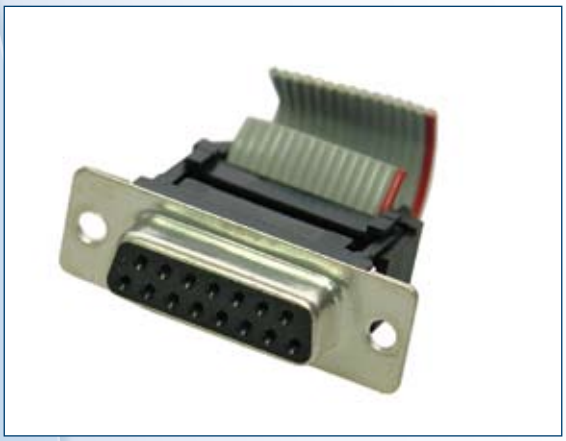

Specifications:

- Contact Resistance: 20 mΩ Max
- Insulator Resistance: 1000 MΩ Min at 500V DC
- Current Rating: 5A
- Dielectric Withstanding Voltage: 1000V AC for 1 minute
- Operating Temperature: -55°c to +105°c

Materials:

- Contact: Bronze
- Housing: Glass-filled thermoplastic, UL94V-0
- Shell: Steel, Tin plated

Dimensions:

Nb of Contacts	A	B	C	D
9	30,89	24,99	16,33	10,16
15	39,10	33,32	24,66	17,78
25	53,09	47,04	38,38	30,48
37	69,40	63,50	54,84	45,72

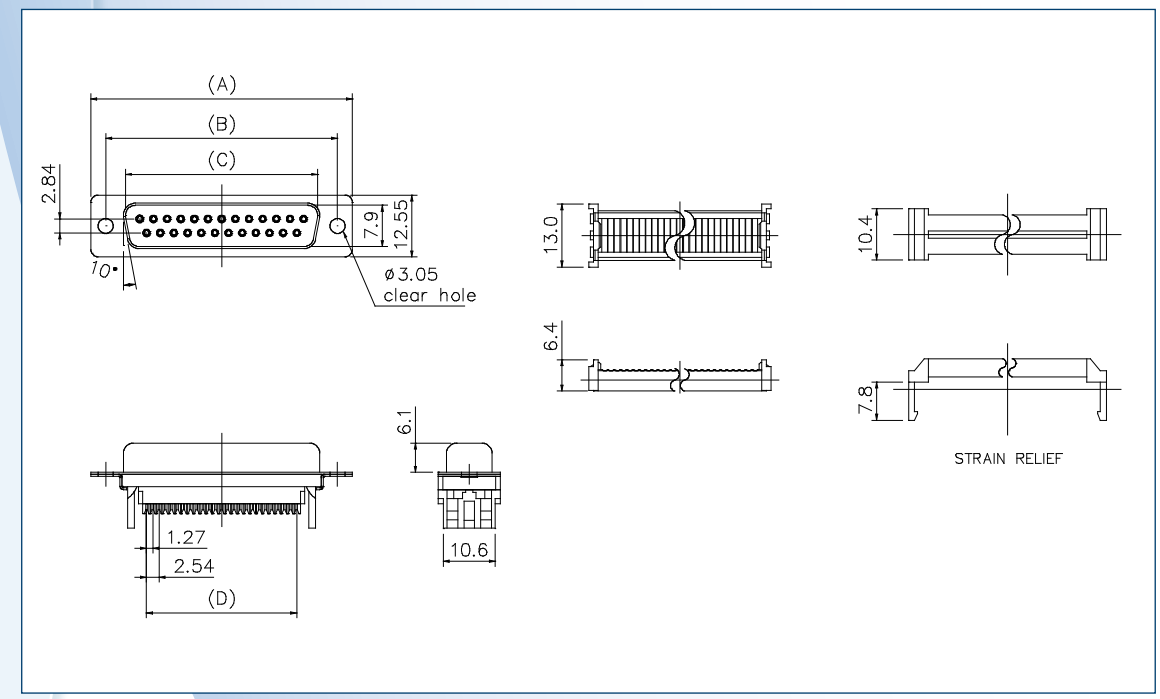

Part Numbers :

Nb of Contacts	Performance Level 3 (flash Gold)	Performance Level 2 (0,38 µm Gold)	Performance Level 1 (0,76 µm Gold)
9	L17DEFRA09S	L117DEFRA09S	L17DEFRA09SC309
15	L17DAFRA15S	L117DAFRA15S	L17DAFRA15SC309
25	L17DBFRA25S	L117DBFRA25S	L17DBFRA25SC309
37	L17DCFRA37S	L117DCFRA37S	L17DCFRA37SC309

Performance levels as per DIN 41 652/IEC 807-3

PLUG STRAIGHT PCB – REAR INSERTS

Specifications:

- Contact Resistance: 20 mΩ Max
- Insulator Resistance: 1000 MΩ Min at 500V DC
- Current Rating: 5A
- Dielectric Withstanding Voltage: 1000V AC for 1 minute
- Operating Temperature: -55°c to +105°c

Materials:

- Contact: Brass
- Housing: Glass-filled thermoplastic, UL94V-0
- Shell: Steel, Tin plated

Dimensions:

Nb of Contacts	A	B	C
9	30,89	24,99	16,92
15	39,10	33,32	25,25
25	53,09	47,04	38,96
37	69,40	63,50	55,42

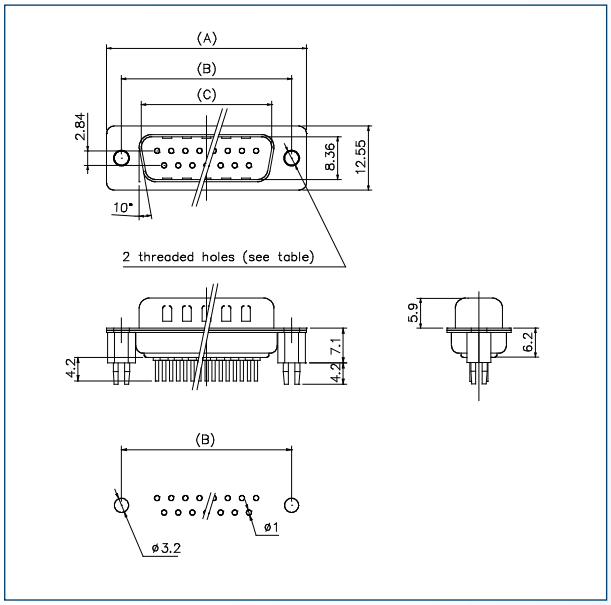

Part Numbers :

Nb of Contacts	Threaded holes	Performance Level 3 (flash Gold)	Performance Level 2 (0,38 µm Gold)	Performance Level 1 (0,76 µm Gold)
9	UNC #4-40	L717SDEH09POL2RM5	L777SDEH09POL2RM5	L717SDEH09POL2RM5C309
	M3	L717SDEG09POL2RM5	L777SDEG09POL2RM5	L717SDEG09POL2RM5C309
15	UNC #4-40	L717SDAH15POL2RM5	L777SDAH15POL2RM5	L717SDAH15POL2RM5C309
	M3	L717SDAG15POL2RM5	L777SDAG15POL2RM5	L717SDAG15POL2RM5C309
25	UNC #4-40	L717SDBH25POL2RM5	L777SDBH25POL2RM5	L717SDBH25POL2RM5C309
	M3	L717SDBG25POL2RM5	L777SDBG25POL2RM5	L717SDBG25POL2RM5C309
37	UNC #4-40	L717SDCH37POL2RM5	L777SDCH37POL2RM5	L717SDCH37POL2RM5C309
	M3	L717SDCG37POL2RM5	L777SDCG37POL2RM5	L717SDCG37POL2RM5C309

Performance levels as per DIN 41 652/IEC 807-3

RECEPTACLE STRAIGHT PCB – REAR INSERTS

Specifications:

- Contact Resistance: 20 MΩ Max
- Insulator Resistance: 1000 MΩ Min at 500V DC
- Current Rating: 5A
- Dielectric Withstanding Voltage: 1000V AC for 1 minute
- Operating Temperature: -55°c to +105°c

Materials:

- Contact: Bronze
- Housing: Glass-filled thermoplastic, UL94V-0
- Shell: Steel, Tin plated

Dimensions:

Nb of Contacts	A	B	C
9	30,89	24,99	16,33
15	39,10	33,32	24,66
25	53,09	47,04	38,38
37	69,40	63,50	54,84

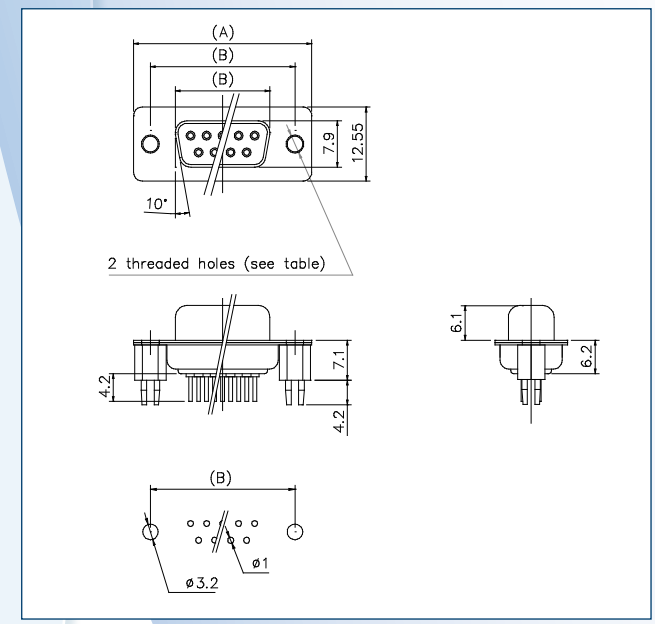

Part Numbers :

Nb of Contacts	Threaded holes	Performance Level 3 (flash Gold)	Performance Level 2 (0,38 µm Gold)	Performance Level 1 (0,76 µm Gold)
9	UNC #4-40	L77SDEH09SOL2RM5	L177SDEH09SOL2RM5	L77SDEH09SOL2RM5C309
	M3	L77SDEG09SOL2RM5	L177SDEG09SOL2RM5	L77SDEG09SOL2RM5C309
15	UNC #4-40	L77SDAH15SOL2RM5	L177SDAH15SOL2RM5	L77SDAH15SOL2RM5C309
	M3	L77SDAG15SOL2RM5	L177SDAG15SOL2RM5	L77SDAG15SOL2RM5C309
25	UNC #4-40	L77SDBH25SOL2RM5	L177SDBH25SOL2RM5	L77SDBH25SOL2RM5C309
	M3	L77SDBG25SOL2RM5	L177SDBG25SOL2RM5	L77SDBG25SOL2RM5C309
37	UNC #4-40	L77SDCH37SOL2RM5	L177SDCH37SOL2RM5	L77SDCH37SOL2RM5C309
	M3	L77SDCG37SOL2RM5	L177SDCG37SOL2RM5	L77SDCG37SOL2RM5C309

Performance levels as per DIN 41 652/IEC 807-3

PLUG STRAIGHT PCB – FRONT SCREWLOCKS

Specifications:

- Contact Resistance: 20 MΩ Max
- Insulator Resistance: 1000 MΩ Min at 500V DC
- Current Rating: 5A
- Dielectric Withstanding Voltage: 1000V AC for 1 minute
- Operating Temperature: -55°c to +105°c

Materials:

- Contact: Brass
- Housing: Glass-filled thermoplastic, UL94V-0
- Shell: Steel, Tin plated

Dimensions:

Nb of Contacts	A	B	C
9	30,89	24,99	16,92
15	39,10	33,32	25,25
25	53,09	47,04	38,96
37	69,40	63,50	55,42

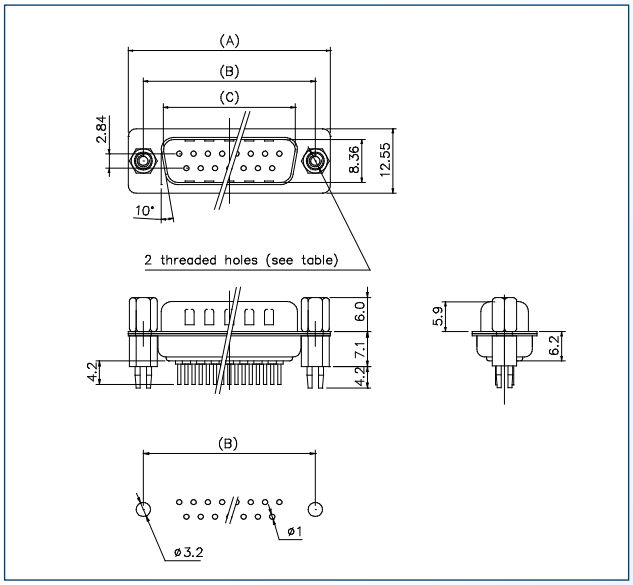

Part Numbers :

Nb of Contacts	Threaded holes	Performance Level 3 (flash Gold)	Performance Level 2 (0,38 µm Gold)	Performance Level 1 (0,76 µm Gold)
9	UNC #4-40	L717SDEH09POL2RM8	L777SDEH09POL2RM8	L717SDEH09POL2RM8C309
	M3	L717SDEG09POL2RM8	L777SDEG09POL2RM8	L717SDEG09POL2RM8C309
15	UNC #4-40	L717SDAH15POL2RM8	L777SDAH15POL2RM8	L717SDAH15POL2RM8C309
	M3	L717SDAG15POL2RM8	L777SDAG15POL2RM8	L717SDAG15POL2RM8C309
25	UNC #4-40	L717SDBH25POL2RM8	L777SDBH25POL2RM8	L717SDBH25POL2RM8C309
	M3	L717SDBG25POL2RM8	L777SDBG25POL2RM8	L717SDBG25POL2RM8C309
37	UNC #4-40	L717SDCH37POL2RM8	L777SDCH37POL2RM8	L717SDCH37POL2RM8C309
	M3	L717SDCG37POL2RM8	L777SDCG37POL2RM8	L717SDCG37POL2RM8C309

Performance levels as per DIN 41 652/IEC 807-3

RECEPTACLE STRAIGHT PCB – FRONT SCREWLOCKS

Specifications:

- Contact Resistance: 20 mΩ Max
- Insulator Resistance: 1000 MΩ Min at 500V DC
- Current Rating: 5A
- Dielectric Withstanding Voltage: 1000V AC for 1 minute
- Operating Temperature: -55°c to +105°c

Materials:

- Contact: Bronze
- Housing: Glass-filled thermoplastic, UL94V-0
- Shell: Steel, Tin plated

Dimensions:

Nb of Contacts	A	B	C
9	30,89	24,99	16,33
15	39,10	33,32	24,66
25	53,09	47,04	38,38
37	69,40	63,50	54,84

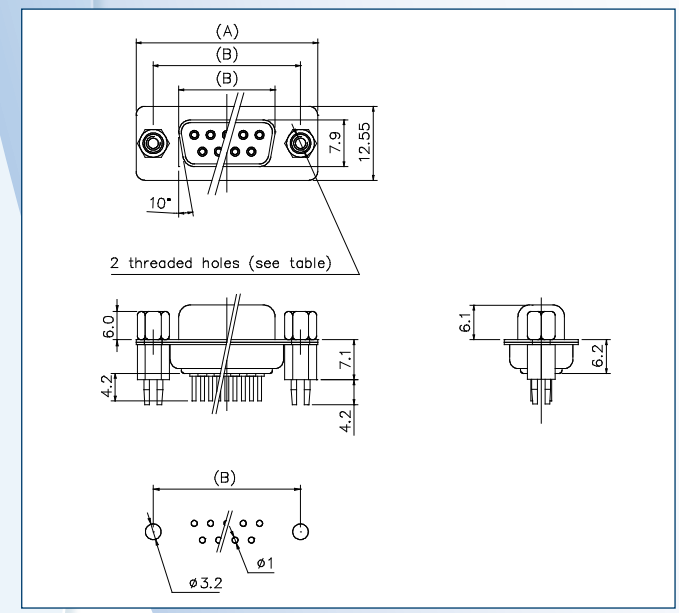

Part Numbers :

Nb of Contacts	Threaded holes	Performance Level 3 (flash Gold)	Performance Level 2 (0,38 µm Gold)	Performance Level 1 (0,76 µm Gold)
9	UNC #4-40	L77SDEH09SOL2RM8	L177SDEH09SOL2RM8	L77SDEH09SOL2RM8C309
	M3	L77SDEG09SOL2RM8	L177SDEG09SOL2RM8	L77SDEG09SOL2RM8C309
15	UNC #4-40	L77SDAH15SOL2RM8	L177SDAH15SOL2RM8	L77SDAH15SOL2RM8C309
	M3	L77SDAG15SOL2RM8	L177SDAG15SOL2RM8	L77SDAG15SOL2RM8C309
25	UNC #4-40	L77SDBH25SOL2RM8	L177SDBH25SOL2RM8	L77SDBH25SOL2RM8C309
	M3	L77SDBG25SOL2RM8	L177SDBG25SOL2RM8	L77SDBG25SOL2RM8C309
37	UNC #4-40	L77SDCH37SOL2RM8	L177SDCH37SOL2RM8	L77SDCH37SOL2RM8C309
	M3	L77SDCG37SOL2RM8	L177SDCG37SOL2RM8	L77SDCG37SOL2RM8C309

Performance levels as per DIN 41 652/IEC 807-3

PLUG STRAIGHT PCB LOW PROFILE – REAR INSERTS

Specifications:

- Contact Resistance: 20 mΩ Max
- Insulator Resistance: 1000 MΩ Min at 500V DC
- Current Rating: 5A
- Dielectric Withstanding Voltage: 1000V AC for 1 minute
- Operating Temperature: -55°c to +105°c

Materials:

- Contact: Brass
- Housing: Glass-filled thermoplastic, UL94V-0
- Shell: Steel, Tin plated

Dimensions:

Nb of Contacts	A	B	C
9	30,89	24,99	16,92
15	39,10	33,32	25,25
25	53,09	47,04	38,96
37	69,40	63,50	55,42

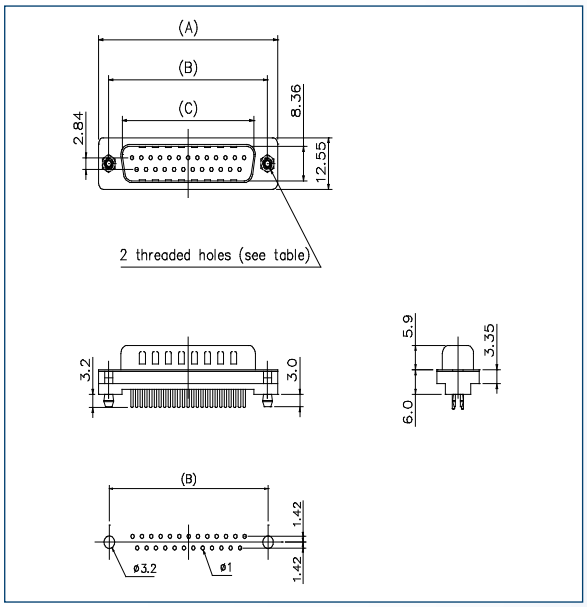

Part Numbers :

Nb of Contacts	Threaded holes	Performance Level 3 (flash Gold)	Performance Level 2 (0,38 µm Gold)	Performance Level 1 (0,76 µm Gold)
9	UNC #4-40	L717TSEH09POL2RM5	L777TSEH09POL2RM5	L717TSEH09POL2RM5C309
	M3	L717TSEG09POL2RM5	L777TSEG09POL2RM5	L717TSEG09POL2RM5C309
15	UNC #4-40	L717TSAH15POL2RM5	L777TSAH15POL2RM5	L717TSAH15POL2RM5C309
	M3	L717TSAG15POL2RM5	L777TSAG15POL2RM5	L717TSAG15POL2RM5C309
25	UNC #4-40	L717TSBH25POL2RM5	L777TSBH25POL2RM5	L717TSBH25POL2RM5C309
	M3	L717TSBG25POL2RM5	L777TSBG25POL2RM5	L717TSBG25POL2RM5C309
37	UNC #4-40	L717TSCH37POL2RM5	L777TSCH37POL2RM5	L717TSCH37POL2RM5C309
	M3	L717TSCG37POL2RM5	L777TSCG37POL2RM5	L717TSCG37POL2RM5C309

Performance levels as per DIN 41 652/IEC 807-3

RECEPTACLE STRAIGHT PCB LOW PROFILE – REAR INSERTS

Specifications:

- Contact Resistance: 20 mΩ Max
- Insulator Resistance: 1000 MΩ Min at 500V DC
- Current Rating: 5A
- Dielectric Withstanding Voltage: 1000V AC for 1 minute
- Operating Temperature: -55°c to +105°c

Materials:

- Contact: Bronze
- Housing: Glass-filled thermoplastic, UL94V-0
- Shell: Steel, Tin plated

Dimensions:

Nb of Contacts	A	B	C
9	30,89	24,99	16,33
15	39,10	33,32	24,66
25	53,09	47,04	38,38
37	69,40	63,50	54,84

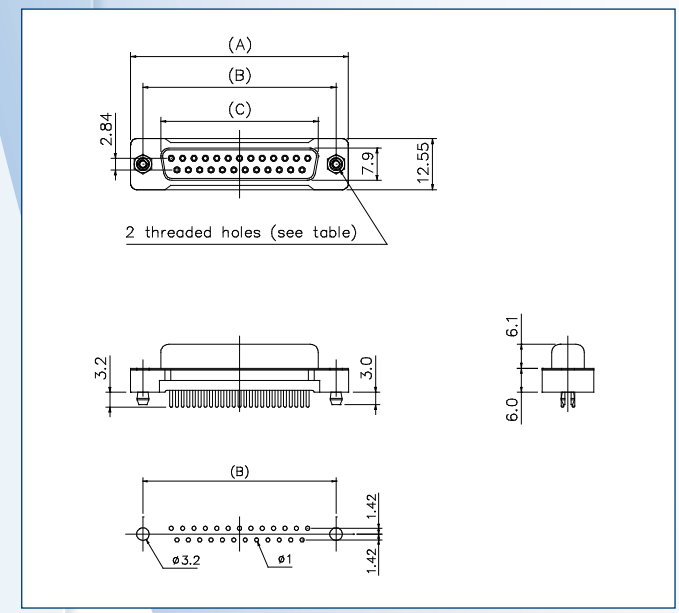

Part Numbers :

Nb of Contacts	Threaded holes	Performance Level 3 (flash Gold)	Performance Level 2 (0,38 µm Gold)	Performance Level 1 (0,76 µm Gold)
9	UNC #4-40	L77TSEH09SOL2RM5	L177TSEH09SOL2RM5	L77TSEH09SOL2RM5C309
	M3	L77TSEG09SOL2RM5	L177TSEG09SOL2RM5	L77TSEG09SOL2RM5C309
15	UNC #4-40	L77TSAH15SOL2RM5	L177TSAH15SOL2RM5	L77TSAH15SOL2RM5C309
	M3	L77TSAG15SOL2RM5	L177TSAG15SOL2RM5	L77TSAG15SOL2RM5C309
25	UNC #4-40	L77TSBH25SOL2RM5	L177TSBH25SOL2RM5	L77TSBH25SOL2RM5C309
	M3	L77TSBG25SOL2RM5	L177TSBG25SOL2RM5	L77TSBG25SOL2RM5C309
37	UNC #4-40	L77TSCH37SOL2RM5	L177TSCH37SOL2RM5	L77TSCH37SOL2RM5C309
	M3	L77TSCG37SOL2RM5	L177TSCG37SOL2RM5	L77TSCG37SOL2RM5C309

Performance levels as per DIN 41 652/IEC 807-3

PLUG STRAIGHT PCB LOW PROFILE – FRONT SCREWLOCKS

Specifications:

- Contact Resistance: 20 mΩ Max
- Insulator Resistance: 1000 MΩ Min at 500V DC
- Current Rating: 5A
- Dielectric Withstanding Voltage: 1000V AC for 1 minute
- Operating Temperature: -55°c to +105°c

Materials:

- Contact: Brass
- Housing: Glass-filled thermoplastic, UL94V-0
- Shell: Steel, Tin plated

Dimensions:

Nb of Contacts	A	B	C
9	30,89	24,99	16,92
15	39,10	33,32	25,25
25	53,09	47,04	38,96
37	69,40	63,50	55,42

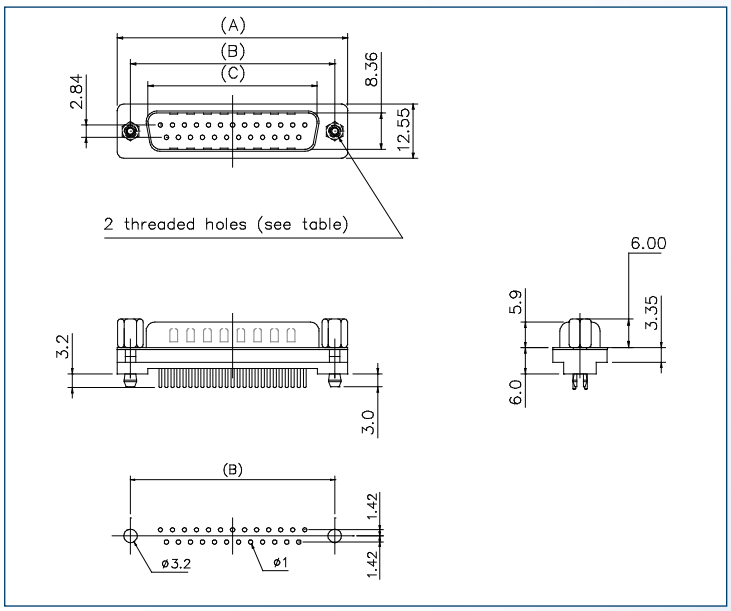

Part Numbers :

Nb of Contacts	Threaded holes	Performance Level 3 (flash Gold)	Performance Level 2 (0,38 µm Gold)	Performance Level 1 (0,76 µm Gold)
9	UNC #4-40	L717TSEH09POL2RM8	L777TSEH09POL2RM8	L717TSEH09POL2RM8C309
	M3	L717TSEG09POL2RM8	L777TSEG09POL2RM8	L717TSEG09POL2RM8C309
15	UNC #4-40	L717TSAH15POL2RM8	L777TSAH15POL2RM8	L717TSAH15POL2RM8C309
	M3	L717TSAG15POL2RM8	L777TSAG15POL2RM8	L717TSAG15POL2RM8C309
25	UNC #4-40	L717TSBH25POL2RM8	L777TSBH25POL2RM8	L717TSBH25POL2RM8C309
	M3	L717TSBG25POL2RM8	L777TSBG25POL2RM8	L717TSBG25POL2RM8C309
37	UNC #4-40	L717TSCH37POL2RM8	L777TSCH37POL2RM8	L717TSCH37POL2RM8C309
	M3	L717TSCG37POL2RM8	L777TSCG37POL2RM8	L717TSCG37POL2RM8C309

Performance levels as per DIN 41 652/IEC 807-3

RECEPTACLE STRAIGHT PCB LOW PROFILE FRONT SCREWLOCKS

Specifications:

- Contact Resistance: 20 mΩ Max
- Insulator Resistance: 1000 MΩ Min at 500V DC
- Current Rating: 5A
- Dielectric Withstanding Voltage: 1000V AC for 1 minute
- Operating Temperature: -55°c to +105°c

Materials:

- Contact: Bronze
- Housing: Glass-filled thermoplastic, UL94V-0
- Shell: Steel, Tin plated

Dimensions:

Nb of Contacts	A	B	C
9	30,89	24,99	16,33
15	39,10	33,32	24,66
25	53,09	47,04	38,38
37	69,40	63,50	54,84

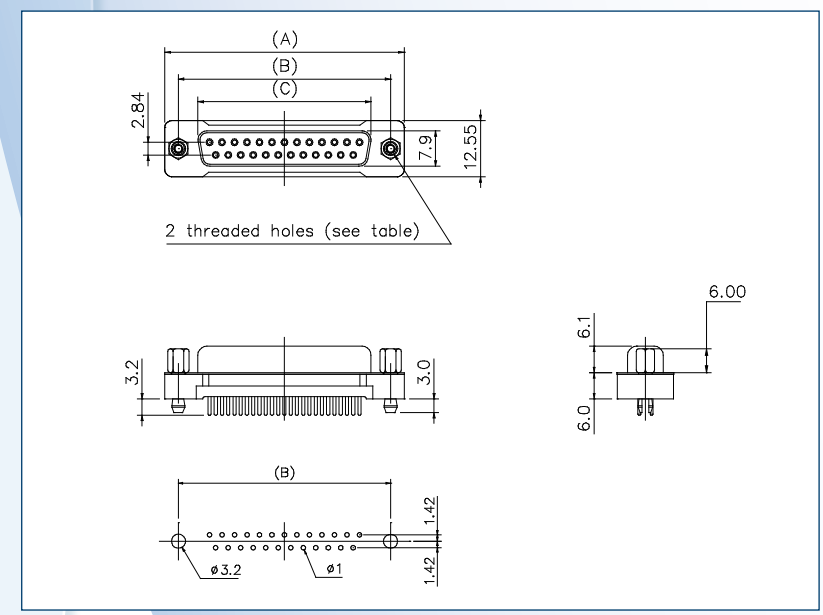

Part Numbers :

Nb of Contacts	Threaded holes	Performance Level 3 (flash Gold)	Performance Level 2 (0,38 µm Gold)	Performance Level 1 (0,76 µm Gold)
9	UNC #4-40	L77TSEH09SOL2RM8	L177TSEH09SOL2RM8	L77TSEH09SOL2RM8C309
	M3	L77TSEG09SOL2RM8	L177TSEG09SOL2RM8	L77TSEG09SOL2RM8C309
15	UNC #4-40	L77TSAH15SOL2RM8	L177TSAH15SOL2RM8	L77TSAH15SOL2RM8C309
	M3	L77TSAG15SOL2RM8	L177TSAG15SOL2RM8	L77TSAG15SOL2RM8C309
25	UNC #4-40	L77TSBH25SOL2RM8	L177TSBH25SOL2RM8	L77TSBH25SOL2RM8C309
	M3	L77TSBG25SOL2RM8	L177TSBG25SOL2RM8	L77TSBG25SOL2RM8C309
37	UNC #4-40	L77TSCH37SOL2RM8	L177TSCH37SOL2RM8	L77TSCH37SOL2RM8C309
	M3	L77TSCG37SOL2RM8	L177TSCG37SOL2RM8	L77TSCG37SOL2RM8C309

Performance levels as per DIN 41 652/IEC 807-3

PLUG RIGHT ANGLE MIL FOOTPRINT – REAR INSERTS

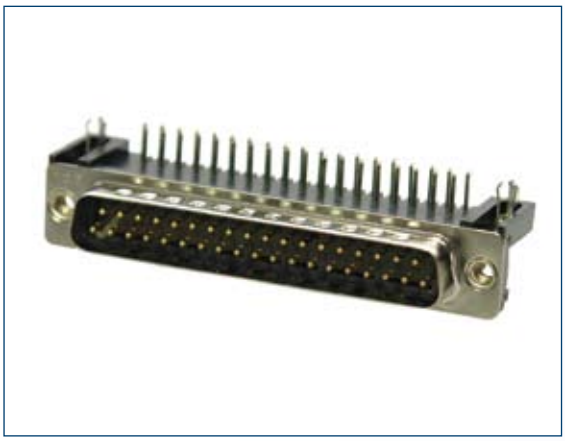

Specifications:

- Contact Resistance: 20 mΩ Max
- Insulator Resistance: 1000 MΩ Min at 500V DC
- Current Rating: 5A
- Dielectric Withstanding Voltage: 1000V AC for 1 minute
- Operating Temperature: -55°c to +105°c

Materials:

- Contact: Brass
- Housing: Glass-filled thermoplastic, UL94V-0
- Shell: Steel, Tin plated

Dimensions:

Nb of Contacts	A	B	C
9	30,89	24,99	16,92
15	39,10	33,32	25,25
25	53,09	47,04	38,96
37	69,40	63,50	55,42

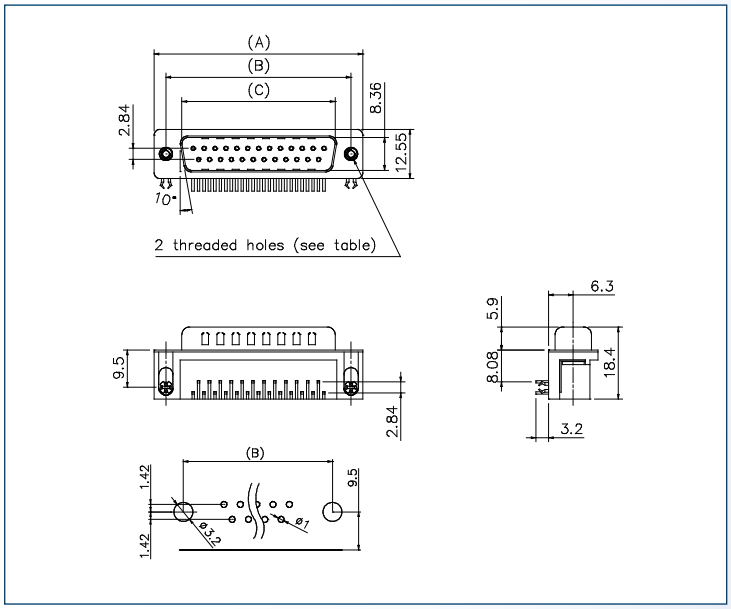

Part Numbers :

Nb of Contacts	Threaded holes	Performance Level 3 (flash Gold)	Performance Level 2 (0,38 µm Gold)	Performance Level 1 (0,76 µm Gold)
9	UNC #4-40	L717SDE09PA4CH4R	L777SDE09PA4CH4R	L717SDE09PA4CH4RC309
	M3	L717SDE09PA4CH3R	L777SDE09PA4CH3R	L717SDE09PA4CH3RC309
15	UNC #4-40	L717SDA15PA4CH4R	L777SDA15PA4CH4R	L717SDA15PA4CH4RC309
	M3	L717SDA15PA4CH3R	L777SDA15PA4CH3R	L717SDA15PA4CH3RC309
25	UNC #4-40	L717SDB25PA4CH4R	L777SDB25PA4CH4R	L717SDB25PA4CH4RC309
	M3	L717SDB25PA4CH3R	L777SDB25PA4CH3R	L717SDB25PA4CH3RC309
37	UNC #4-40	L717SDC37PA4CH4R	L777SDC37PA4CH4R	L717SDC37PA4CH4RC309
	M3	L717SDC37PA4CH3R	L777SDC37PA4CH3R	L717SDC37PA4CH3RC309

Performance levels as per DIN 41 652/IEC 807-3

RECEPTACLE RIGHT ANGLE MIL FOOTPRINT – REAR INSERTS

Specifications:

- Contact Resistance: 20 mΩ Max
- Insulator Resistance: 1000 MΩ Min at 500V DC
- Current Rating: 5A
- Dielectric Withstanding Voltage: 1000V AC for 1 minute
- Operating Temperature: -55°c to +105°c

Materials:

- Contact: Bronze
- Housing: Glass-filled thermoplastic, UL94V-0
- Shell: Steel, Tin plated

Dimensions:

Nb of Contacts	A	B	C
9	30,89	24,99	16,33
15	39,10	33,32	24,66
25	53,09	47,04	38,38
37	69,40	63,50	54,84

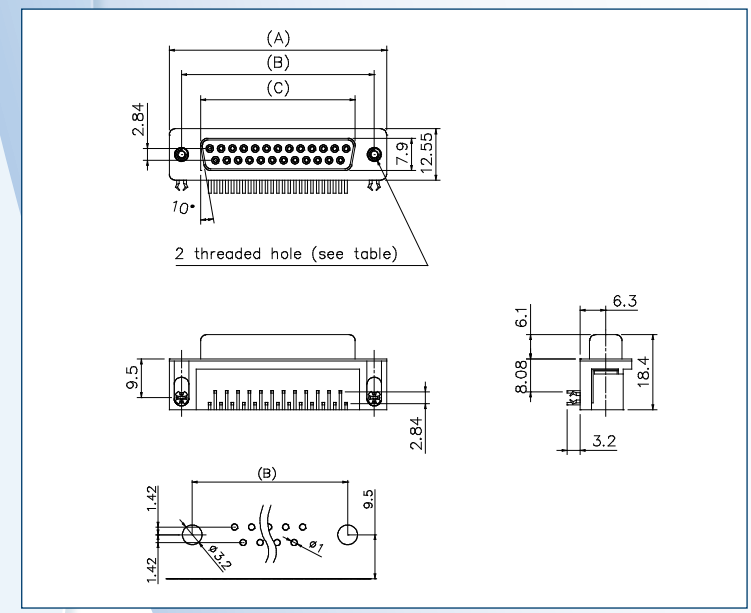

Part Numbers :

Nb of Contacts	Threaded holes	Performance Level 3 (flash Gold)	Performance Level 2 (0,38 µm Gold)	Performance Level 1 (0,76 µm Gold)
9	UNC #4-40	L77SDE09SA4CH4R	L177SDE09SA4CH4R	L77SDE09SA4CH4RC309
	M3	L77SDE09SA4CH3R	L177SDE09SA4CH3R	L77SDE09SA4CH3RC309
15	UNC #4-40	L77SDA15SA4CH4R	L177SDA15SA4CH4R	L77SDA15SA4CH4RC309
	M3	L77SDA15SA4CH3R	L177SDA15SA4CH3R	L77SDA15SA4CH3RC309
25	UNC #4-40	L77SDB25SA4CH4R	L177SDB25SA4CH4R	L77SDB25SA4CH4RC309
	M3	L77SDB25SA4CH3R	L177SDB25SA4CH3R	L77SDB25SA4CH3RC309
37	UNC #4-40	L77SDC37SA4CH4R	L177SDC37SA4CH4R	L77SDC37SA4CH4RC309
	M3	L77SDC37SA4CH3R	L177SDC37SA4CH3R	L77SDC37SA4CH3RC309

Performance levels as per DIN 41 652/IEC 807-3

PLUG RIGHT ANGLE MIL FOOTPRINT – FRONT SCREWLOCKS

Specifications:

- Contact Resistance: 20 mΩ Max
- Insulator Resistance: 1000 MΩ Min at 500V DC
- Current Rating: 5A
- Dielectric Withstanding Voltage: 1000V AC for 1 minute
- Operating Temperature: -55°c to +105°c

Materials:

- Contact: Brass
- Housing: Glass-filled thermoplastic, UL94V-0
- Shell: Steel, Tin plated

Dimensions:

Nb of Contacts	A	B	C
9	30,89	24,99	16,92
15	39,10	33,32	25,25
25	53,09	47,04	38,96
37	69,40	63,50	55,42

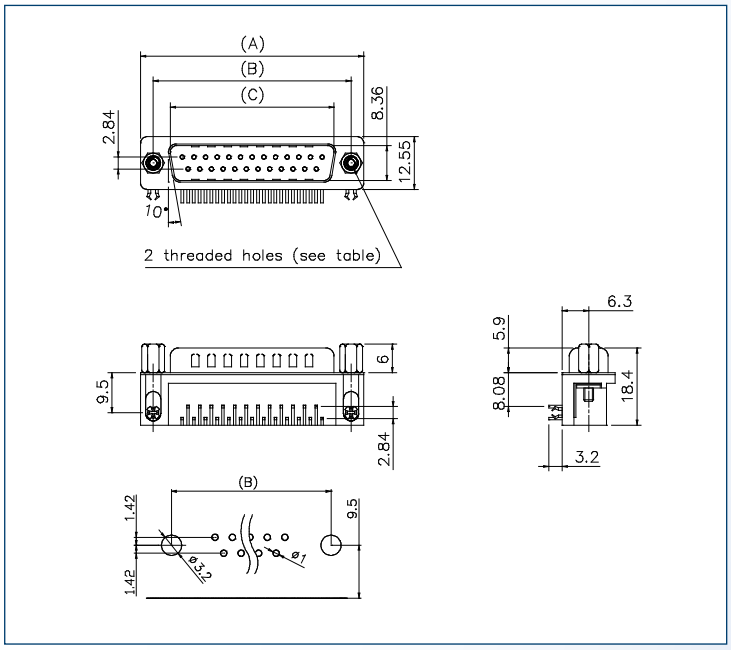

Part Numbers :

Nb of Contacts	Threaded holes	Performance Level 3 (flash Gold)	Performance Level 2 (0,38 µm Gold)	Performance Level 1 (0,76 µm Gold)
9	UNC #4-40	L717SDE09PA4CH4F	L777SDE09PA4CH4F	L717SDE09PA4CH4FC309
	M3	L717SDE09PA4CH3F	L777SDE09PA4CH3F	L717SDE09PA4CH3FC309
15	UNC #4-40	L717SDA15PA4CH4F	L777SDA15PA4CH4F	L717SDA15PA4CH4FC309
	M3	L717SDA15PA4CH3F	L777SDA15PA4CH3F	L717SDA15PA4CH3FC309
25	UNC #4-40	L717SDB25PA4CH4F	L777SDB25PA4CH4F	L717SDB25PA4CH4FC309
	M3	L717SDB25PA4CH3F	L777SDB25PA4CH3F	L717SDB25PA4CH3FC309
37	UNC #4-40	L717SDC37PA4CH4F	L777SDC37PA4CH4F	L717SDC37PA4CH4FC309
	M3	L717SDC37PA4CH3F	L777SDC37PA4CH3F	L717SDC37PA4CH3FC309

Performance levels as per DIN 41 652/IEC 807-3

RECEPTACLE RIGHT ANGLE MIL FOOTPRINT FRONT SCREWLOCKS

Specifications:

- Contact Resistance: 20 mΩ Max
- Insulator Resistance: 1000 MΩ Min at 500V DC
- Current Rating: 5A
- Dielectric Withstanding Voltage: 1000V AC for 1 minute
- Operating Temperature: -55°c to +105°c

Materials:

- Contact: Bronze
- Housing: Glass-filled thermoplastic, UL94V-0
- Shell: Steel, Tin plated

Dimensions:

Nb of Contacts	A	B	C
9	30,89	24,99	16,33
15	39,10	33,32	24,66
25	53,09	47,04	38,38
37	69,40	63,50	54,84

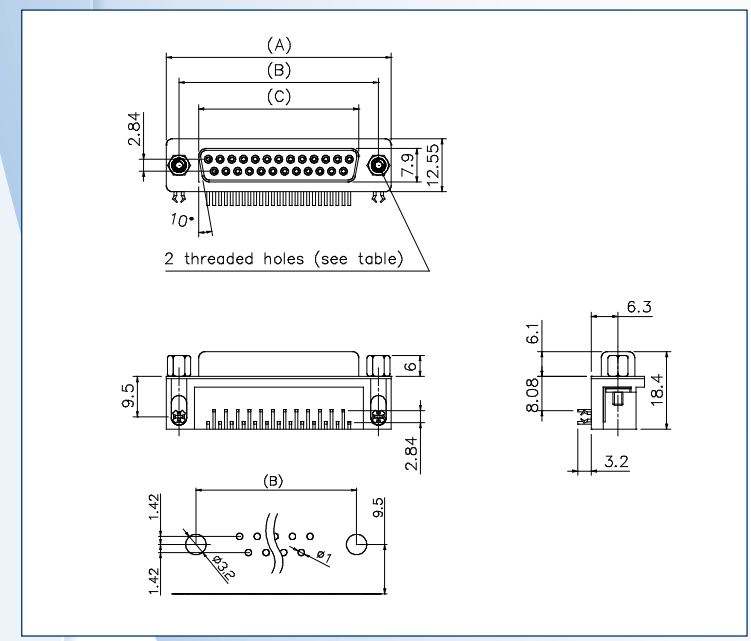

Part Numbers :

Nb of Contacts	Threaded holes	Performance Level 3 (flash Gold)	Performance Level 2 (0,38 µm Gold)	Performance Level 1 (0,76 µm Gold)
9	UNC #4-40	L77SDE09SA4CH4F	L177SDE09SA4CH4F	L77SDE09SA4CH4FC309
	M3	L77SDE09SA4CH3F	L177SDE09SA4CH3F	L77SDE09SA4CH3FC309
15	UNC #4-40	L77SDA15SA4CH4F	L177SDA15SA4CH4F	L77SDA15SA4CH4FC309
	M3	L77SDA15SA4CH3F	L177SDA15SA4CH3F	L77SDA15SA4CH3FC309
25	UNC #4-40	L77SDB25SA4CH4F	L177SDB25SA4CH4F	L77SDB25SA4CH4FC309
	M3	L77SDB25SA4CH3F	L177SDB25SA4CH3F	L77SDB25SA4CH3FC309
37	UNC #4-40	L77SDC37SA4CH4F	L177SDC37SA4CH4F	L77SDC37SA4CH4FC309
	M3	L77SDC37SA4CH3F	L177SDC37SA4CH3F	L77SDC37SA4CH3FC309

Performance levels as per DIN 41 652/IEC 807-3

PLUG RIGHT ANGLE EUROPE FOOTPRINT – REAR INSERTS

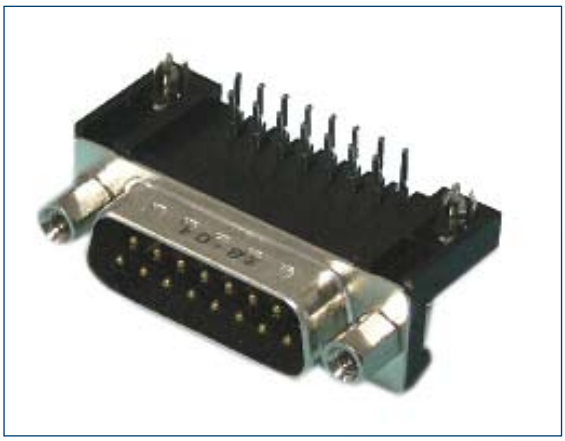

Specifications:

- Contact Resistance: 20 mΩ Max
- Insulator Resistance: 1000 MΩ Min at 500V DC
- Current Rating: 5A
- Dielectric Withstanding Voltage: 1000V AC for 1 minute
- Operating Temperature: -55°c to +105°c

Materials:

- Contact: Brass
- Housing: Glass-filled thermoplastic, UL94V-0
- Shell: Steel, Tin plated

Dimensions:

Nb of Contacts	A	B	C
9	30,89	24,99	16,92
15	39,10	33,32	25,25
25	53,09	47,04	38,96
37	69,40	63,50	55,42

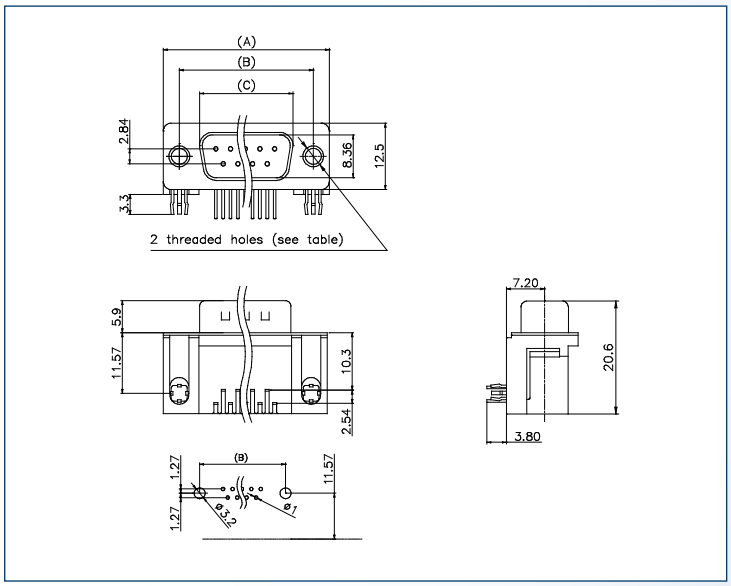

Part Numbers :

Nb of Contacts	Threaded holes	Performance Level 3 (flash Gold)	Performance Level 2 (0,38 µm Gold)	Performance Level 1 (0,76 µm Gold)
9	UNC #4-40	L717SDE09P1ACH4R	L777SDE09P1ACH4R	L717SDE09P1ACH4RC309
	M3	L717SDE09P1ACH3R	L777SDE09P1ACH3R	L717SDE09P1ACH3RC309
15	UNC #4-40	L717SDA15P1ACH4R	L777SDA15P1ACH4R	L717SDA15P1ACH4RC309
	M3	L717SDA15P1ACH3R	L777SDA15P1ACH3R	L717SDA15P1ACH3RC309
25	UNC #4-40	L717SDB25P1ACH4R	L777SDB25P1ACH4R	L717SDB25P1ACH4RC309
	M3	L717SDB25P1ACH3R	L777SDB25P1ACH3R	L717SDB25P1ACH3RC309
37	UNC #4-40	L717SDC37P1ACH4R	L777SDC37P1ACH4R	L717SDC37P1ACH4RC309
	M3	L717SDC37P1ACH3R	L777SDC37P1ACH3R	L717SDC37P1ACH3RC309

Performance levels as per DIN 41 652/IEC 807-3

RECEPTACLE RIGHT ANGLE EUROPE FOOTPRINT REAR INSERTS

Specifications:

- Contact Resistance: 20 mΩ Max
- Insulator Resistance: 1000 MΩ Min at 500V DC
- Current Rating: 5A
- Dielectric Withstanding Voltage: 1000V AC for 1 minute
- Operating Temperature: -55°c to +105°c

Materials:

- Contact: Bronze
- Housing: Glass-filled thermoplastic, UL94V-0
- Shell: Steel, Tin plated

Dimensions:

Nb of Contacts	A	B	C
9	30,89	24,99	16,33
15	39,10	33,32	24,66
25	53,09	47,04	38,38
37	69,40	63,50	54,84

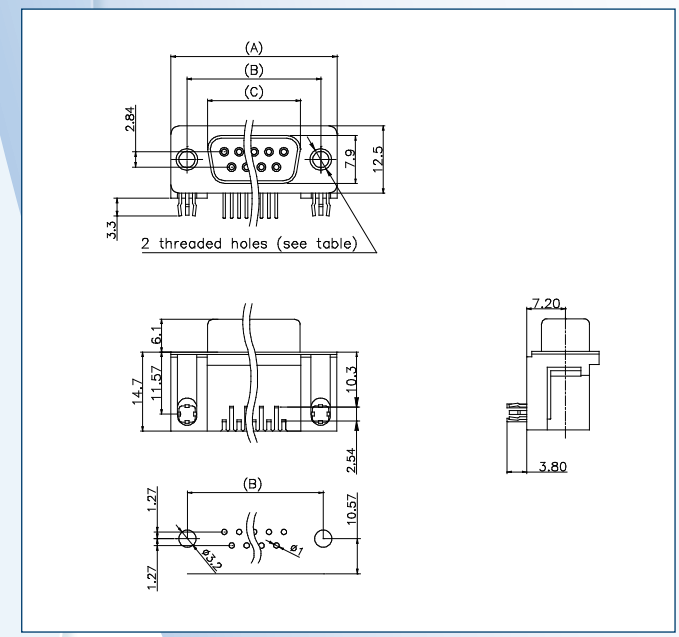

Part Numbers :

Nb of Contacts	Threaded holes	Performance Level 3 (flash Gold)	Performance Level 2 (0,38 µm Gold)	Performance Level 1 (0,76 µm Gold)
9	UNC #4-40	L77SDE09S1ACH4R	L177SDE09S1ACH4R	L77SDE09S1ACH4RC309
	M3	L77SDE09S1ACH3R	L177SDE09S1ACH3R	L77SDE09S1ACH3RC309
15	UNC #4-40	L77SDA15S1ACH4R	L177SDA15S1ACH4R	L77SDA15S1ACH4RC309
	M3	L77SDA15S1ACH3R	L177SDA15S1ACH3R	L77SDA15S1ACH3RC309
25	UNC #4-40	L77SDB25S1ACH4R	L177SDB25S1ACH4R	L77SDB25S1ACH4RC309
	M3	L77SDB25S1ACH3R	L177SDB25S1ACH3R	L77SDB25S1ACH3RC309
37	UNC #4-40	L77SDC37S1ACH4R	L177SDC37S1ACH4R	L77SDC37S1ACH4RC309
	M3	L77SDC37S1ACH3R	L177SDC37S1ACH3R	L77SDC37S1ACH3RC309

Performance levels as per DIN 41 652/IEC 807-3

PLUG RIGHT ANGLE EUROPE FOOTPRINT FRONT SCREWLOCKS

Specifications:

- Contact Resistance: 20 mΩ Max
- Insulator Resistance: 1000 MΩ Min at 500V DC
- Current Rating: 5A
- Dielectric Withstanding Voltage: 1000V AC for 1 minute
- Operating Temperature: -55°c to +105°c

Materials:

- Contact: Brass
- Housing: Glass-filled thermoplastic, UL94V-0
- Shell: Steel, Tin plated

Dimensions:

Nb of Contacts	A	B	C
9	30,89	24,99	16,92
15	39,10	33,32	25,25
25	53,09	47,04	38,96
37	69,40	63,50	55,42

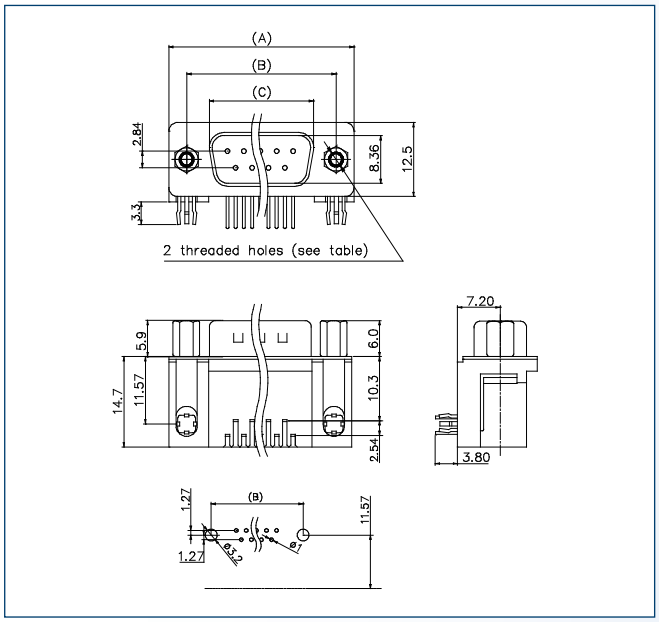

Part Numbers :

Nb of Contacts	Threaded holes	Performance Level 3 (flash Gold)	Performance Level 2 (0,38 µm Gold)	Performance Level 1 (0,76 µm Gold)
9	UNC #4-40	L717SDE09P1ACH4F	L777SDE09P1ACH4F	L717SDE09P1ACH4FC309
	M3	L717SDE09P1ACH3F	L777SDE09P1ACH3F	L717SDE09P1ACH3FC309
15	UNC #4-40	L717SDA15P1ACH4F	L777SDA15P1ACH4F	L717SDA15P1ACH4FC309
	M3	L717SDA15P1ACH3F	L777SDA15P1ACH3F	L717SDA15P1ACH3FC309
25	UNC #4-40	L717SDB25P1ACH4F	L777SDB25P1ACH4F	L717SDB25P1ACH4FC309
	M3	L717SDB25P1ACH3F	L777SDB25P1ACH3F	L717SDB25P1ACH3FC309
37	UNC #4-40	L717SDC37P1ACH4F	L777SDC37P1ACH4F	L717SDC37P1ACH4FC309
	M3	L717SDC37P1ACH3F	L777SDC37P1ACH3F	L717SDC37P1ACH3FC309

Performance levels as per DIN 41 652/IEC 807-3

RECEPTACLE RIGHT ANGLE EUROPE FOOTPRINT SCREWLOCKS

Specifications:

- Contact Resistance: 20 mΩ Max
- Insulator Resistance: 1000 MΩ Min at 500V DC
- Current Rating: 5A
- Dielectric Withstanding Voltage: 1000V AC for 1 minute
- Operating Temperature: -55°c to +105°c

Materials:

- Contact: Bronze
- Housing: Glass-filled thermoplastic, UL94V-0
- Shell: Steel, Tin plated

Dimensions:

Nb of Contacts	A	B	C
9	30,89	24,99	16,33
15	39,10	33,32	24,66
25	53,09	47,04	38,38
37	69,40	63,50	54,84

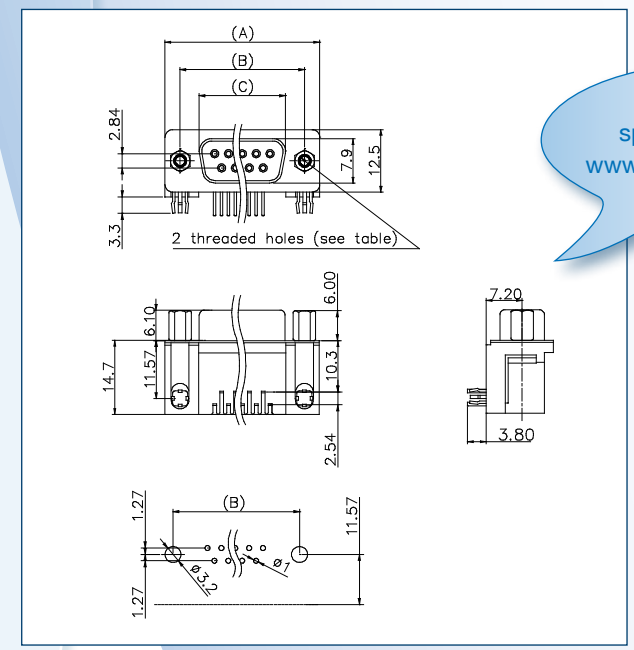

For detailed specifications check www.amphenolinfocom.eu

Part Numbers :

Nb of Contacts	Threaded holes	Performance Level 3 (flash Gold)	Performance Level 2 (0,38 µm Gold)	Performance Level 1 (0,76 µm Gold)
9	UNC #4-40	L77SDE09S1ACH4F	L177SDE09S1ACH4F	L77SDE09S1ACH4FC309
	M3	L77SDE09S1ACH3F	L177SDE09S1ACH3F	L77SDE09S1ACH3FC309
15	UNC #4-40	L77SDA15S1ACH4F	L177SDA15S1ACH4F	L77SDA15S1ACH4FC309
	M3	L77SDA15S1ACH3F	L177SDA15S1ACH3F	L77SDA15S1ACH3FC309
25	UNC #4-40	L77SDB25S1ACH4F	L177SDB25S1ACH4F	L77SDB25S1ACH4FC309
	M3	L77SDB25S1ACH3F	L177SDB25S1ACH3F	L77SDB25S1ACH3FC309
37	UNC #4-40	L77SDC37S1ACH4F	L177SDC37S1ACH4F	L77SDC37S1ACH4FC309
	M3	L77SDC37S1ACH3F	L177SDC37S1ACH3F	L77SDC37S1ACH3FC309

Performance levels as per DIN 41 652/IEC 807-3

PLUG SOLDER CUP

Specifications:

- Contact Resistance: 20 mΩ Max
- Insulator Resistance: 1000 MΩ Min at 500V DC
- Current Rating: 3A
- Dielectric Withstanding Voltage: 1000V AC for 1 minute
- Operating Temperature: -55°c to +105°c

Materials:

- Contact: Brass
- Housing: Glass-filled thermoplastic, UL94V-0
- Shell: Steel, Tin plated

Dimensions:

Nb of Contacts	A	B	C
15	30,89	24,99	16,92
26	39,10	33,32	25,25
44	53,09	47,04	38,96
62	69,40	63,50	55,42

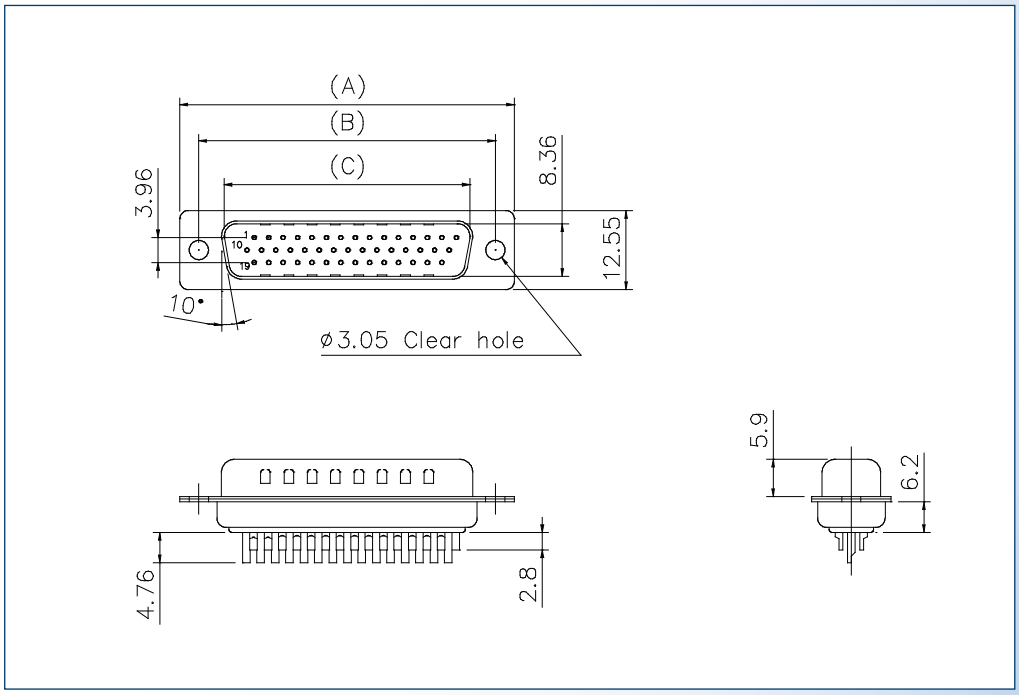

Part Numbers :

Nb of Contacts	Performance Level 3 (flash Gold)	Performance Level 2 (0,38 µm Gold)	Performance Level 1 (0,76 µm Gold)
15	L717HDE15P	L777HDE15P	L717HDE15PC309
26	L717HDA26P	L777HDA26P	L717HDA26PC309
44	L717HDB44P	L777HDB44P	L717HDB44PC309
62	L717HDC62P	L777HDC62P	L717HDC62PC309

Performance levels as per DIN 41 652/IEC 807-3

RECEPTACLE SOLDER CUP

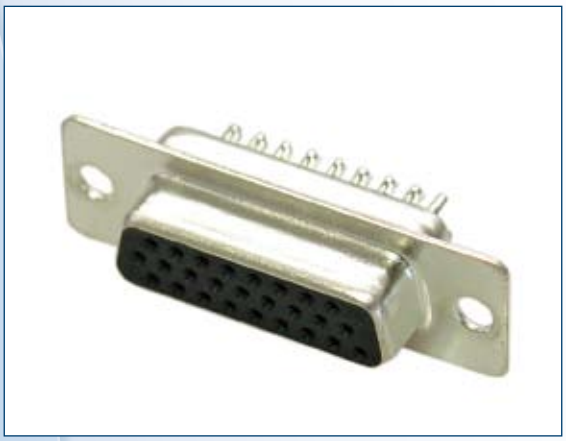

Specifications:

- Contact Resistance: 20 mΩ Max
- Insulator Resistance: 1000 MΩ Min at 500V DC
- Current Rating: 3A
- Dielectric Withstanding Voltage: 1000V AC for 1 minute
- Operating Temperature: -55°c to +105°c

Materials:

- Contact: Bronze
- Housing: Glass-filled thermoplastic, UL94V-0
- Shell: Steel, Tin plated

Dimensions:

Nb of Contacts	A	B	C
15	30,89	24,99	16,33
26	39,10	33,32	24,66
44	53,09	47,04	38,38
62	69,40	63,50	54,84

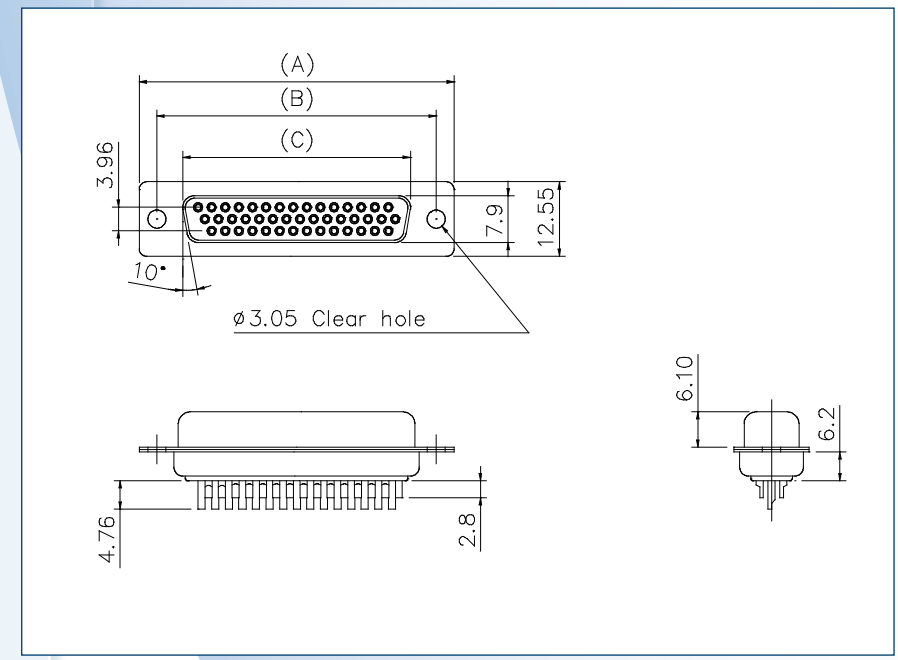

Part Numbers :

Nb of Contacts	Performance Level 3 (flash Gold)	Performance Level 2 (0,38 µm Gold)	Performance Level 1 (0,76 µm Gold)
15	L77HDE15S	L177HDE15S	L77HDE15SC309
26	L77HDA26S	L177HDA26S	L77HDA26SC309
44	L77HDB44S	L177HDB44S	L77HDB44SC309
62	L77HDC62S	L177HDC62S	L77HDC62SC309

Performance levels as per DIN 41 652/IEC 807-3

PLUG CRIMP

Specifications:

- Contact Resistance: 20 mΩ Max
- Insulator Resistance: 1000 MΩ Min at 500V DC
- Current Rating: 3A
- Dielectric Withstanding Voltage: 1000V AC for 1 minute
- Operating Temperature: -55°c to +105°c

Materials:

- Housing: Glass-filled thermoplastic, UL94V-0
- Shell: Steel, Tin plated

Dimensions:

Nb of Contacts	A	B	C
15	30,89	24,99	16,92
26	39,10	33,32	25,25
44	53,09	47,04	38,96
62	69,40	63,50	55,42

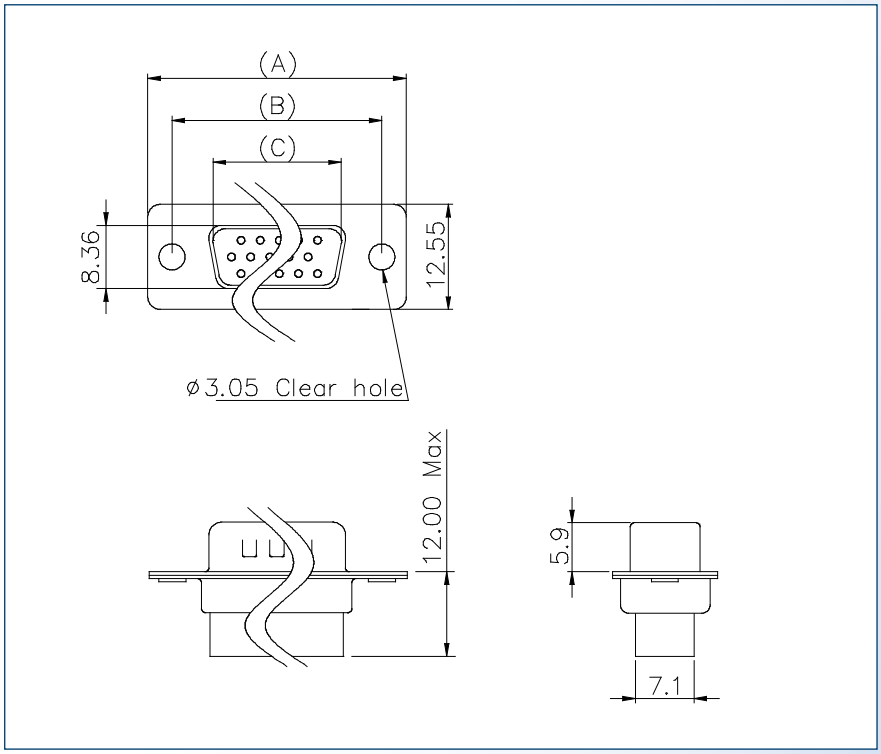

Part Numbers :

Nb of Contacts	Part Number
15	L777HRE15P
26	L777HRA26P
44	L777HRB44P
62	L777HRC62P

RECEPTACLE CRIMP

Specifications:

- Contact Resistance: 20 mΩ Max
- Insulator Resistance: 1000 MΩ Min at 500V DC
- Current Rating: 3A
- Dielectric Withstanding Voltage: 1000V AC for 1 minute
- Operating Temperature: -55°c to +105°c

Materials:

- Housing: Glass-filled thermoplastic, UL94V-0
- Shell: Steel, Tin plated

Dimensions:

Nb of Contacts	A	B	C
15	30,89	24,99	16,33
26	39,10	33,32	24,66
44	53,09	47,04	38,38
62	69,40	63,50	54,84

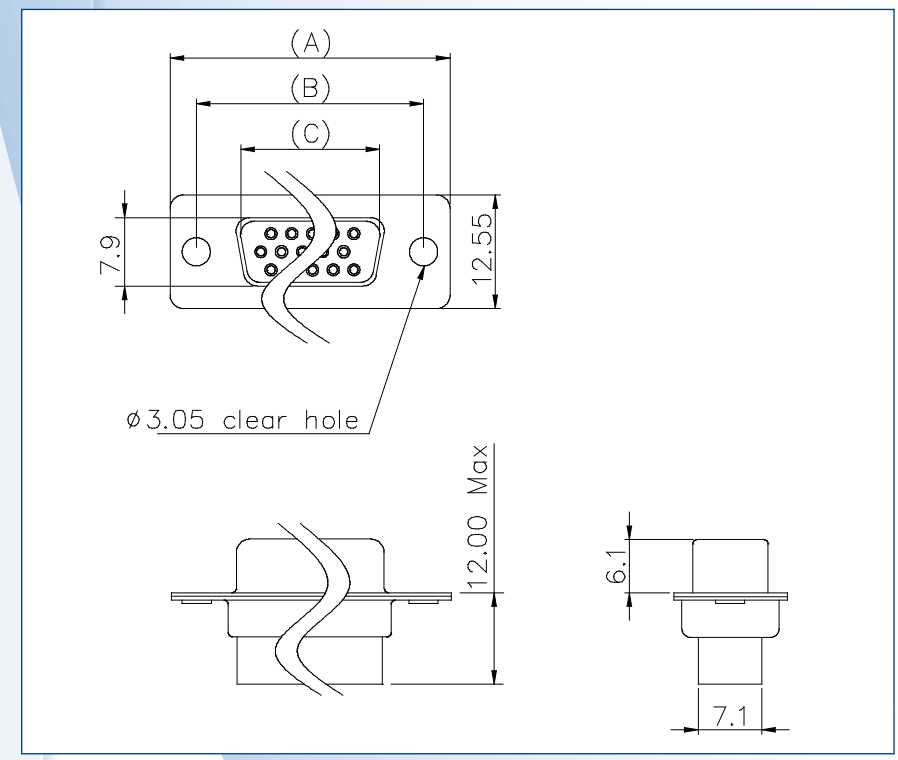

Part Numbers :

Nb of Contacts	Part Number
15	L177HRE15S
26	L177HRA26S
44	L177HRB44S
62	L177HRC62S

MALE CRIMP CONTACT

Specifications:
Wire gage: AWG 24-28, solid or stranded wires

Material:
Brass

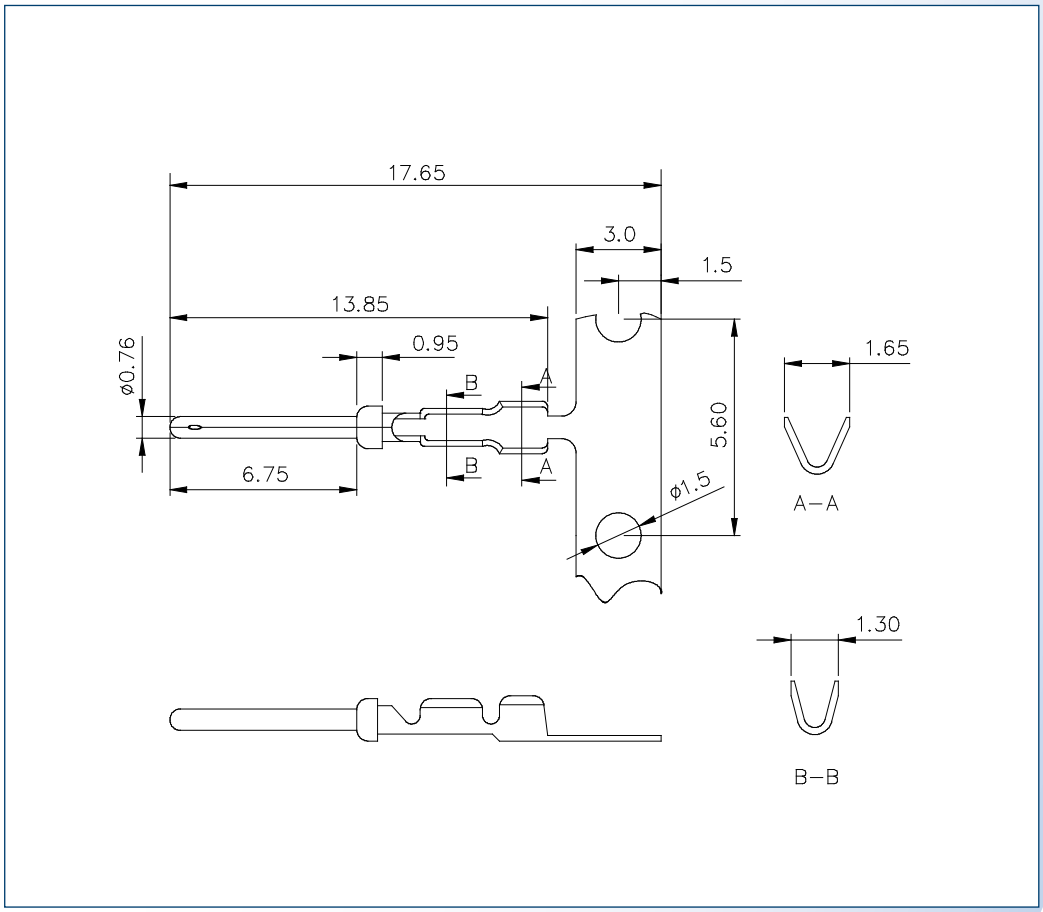

Part Numbers :

Packaging	Plating	Performance Level 3 (flash Gold)	Performance Level 2 (0,38 µm Gold)	Performance Level 1 (0,76 µm Gold)
reel of 5000 cts	Full Gold	L17HRD2M015K	L17HRD2M025K	L17HRD2M045K
	Selective	L17HRD2M115K	L17HRD2M125K	L17HRD2M145K
reel of 10000 cts	Full Gold	L17HRD2M0110K	L17HRD2M0210K	L17HRD2M0410K
	Selective	L17HRD2M1110K	L17HRD2M1210K	L17HRD2M1410K

Performance levels as per DIN 41 652/IEC 807-3

FEMALE CRIMP CONTACT

Specifications:
Wire gage: AWG 24-28, solid or stranded wires

Material:
Bronze

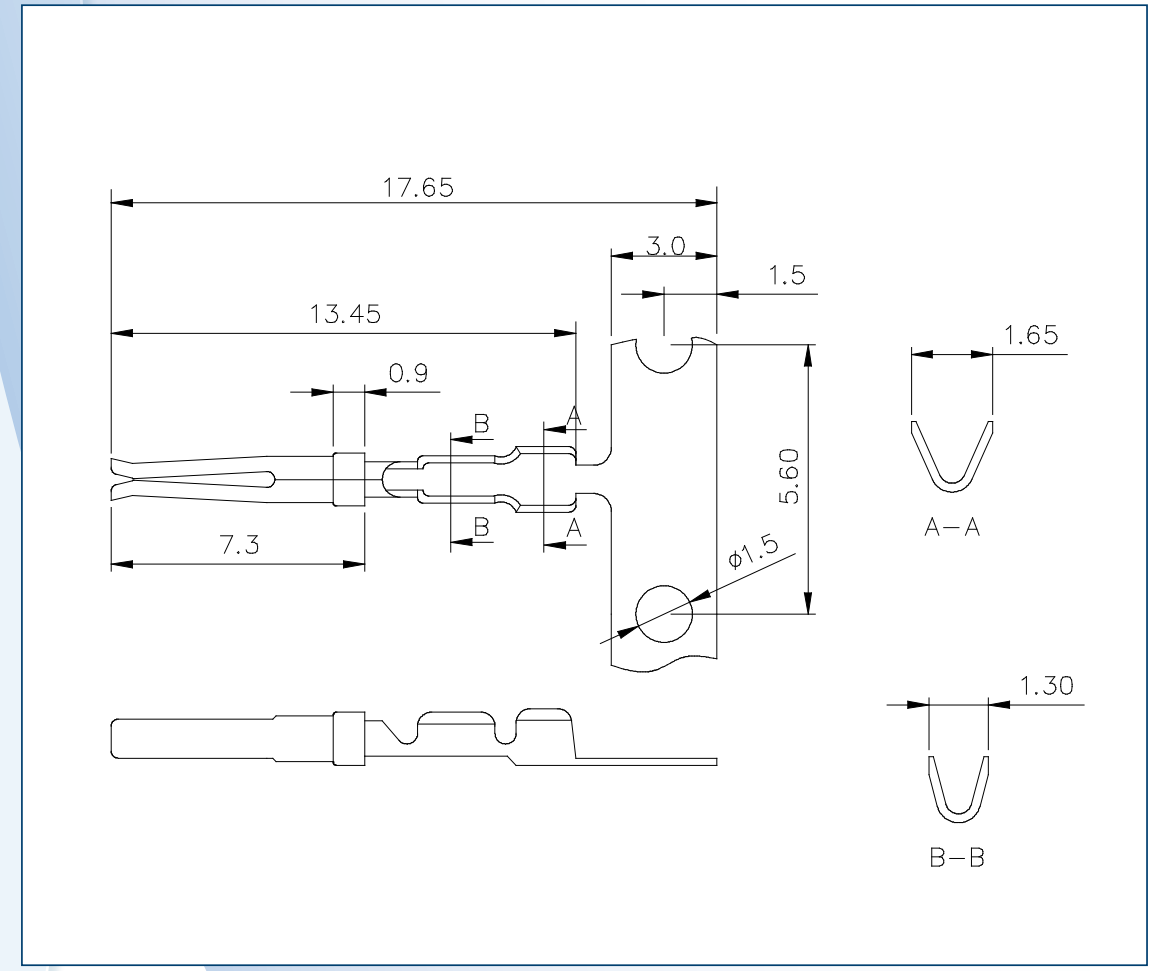

Part Numbers :

Packaging	Plating	Performance Level 3 (flash Gold)	Performance Level 2 (0,38 µm Gold)	Performance Level 1 (0,76 µm Gold)
reel of 5000 cts	Full Gold	L17HRD2F015K	L17HRD2F025K	L17HRD2F045K
	Selective	L17HRD2F115K	L17HRD2F125K	L17HRD2F145K
reel of 10000 cts	Full Gold	L17HRD2F0110K	L17HRD2F0210K	L17HRD2F0410K
	Selective	L17HRD2F1110K	L17HRD2F1210K	L17HRD2F1410K

Performance levels as per DIN 41 652/IEC 807-3

PLUG STRAIGHT PCB – REAR INSERTS

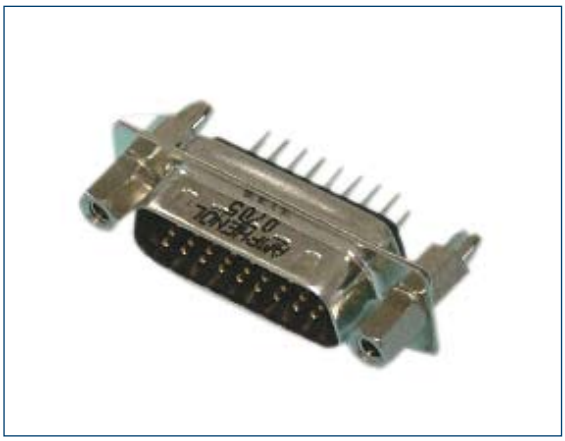

Specifications:

- Contact Resistance: 20 mΩ Max
- Insulator Resistance: 1000 MΩ Min at 500V DC
- Current Rating: 3A
- Dielectric Withstanding Voltage: 1000V AC for 1 minute
- Operating Temperature: -55°c to +105°c

Materials:

- Contact: Brass
- Housing: Glass-filled thermoplastic, UL94V-0
- Shell: Steel, Tin plated

Dimensions:

Nb of Contacts	A	B	C
15	30,89	24,99	16,92
26	39,10	33,32	25,25
44	53,09	47,04	38,96
62	69,40	63,50	55,42

See page 42 for PCB Layout

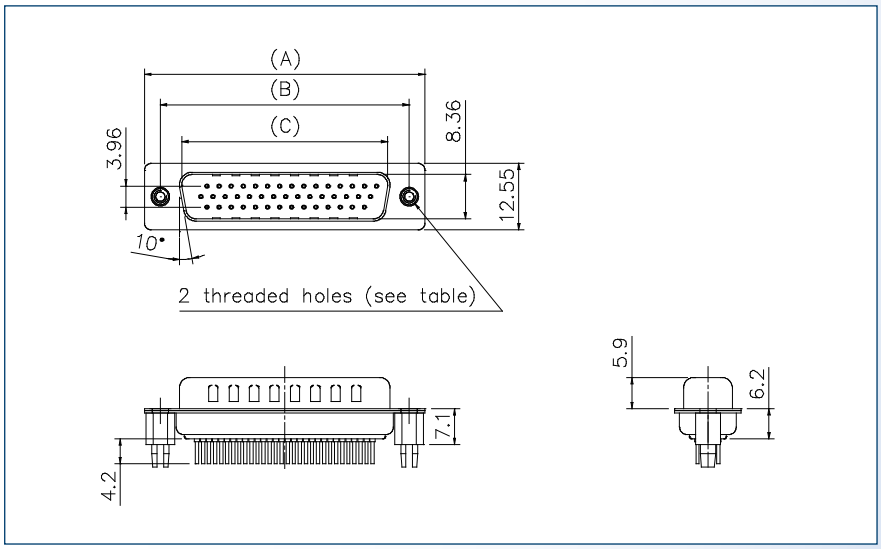

Part Numbers :

Nb of Contacts	Theaded holes	Performance Level 3 (flash Gold)	Performance Level 2 (0,38 µm Gold)	Performance Level 1 (0,76 µm Gold)
15	UNC #4-40	L717HDEH15POL2RM5	L777HDEH15POL2RM5	L717HDEH15POL2RM5C309
	M3	L717HDEG15POL2RM5	L777HDEG15POL2RM5	L717HDEG15POL2RM5C309
26	UNC #4-40	L717HDAH26POL2RM5	L777HDAH26POL2RM5	L717HDAH26POL2RM5C309
	M3	L717HDAG26POL2RM5	L777HDAG26POL2RM5	L717HDAG26POL2RM5C309
44	UNC #4-40	L717HDBH44POL2RM5	L777HDBH44POL2RM5	L717HDBH44POL2RM5C309
	M3	L717HDBG44POL2RM5	L777HDBG44POL2RM5	L717HDBG44POL2RM5C309
62	UNC #4-40	L717HDCH62POL2RM5	L777HDCH62POL2RM5	L717HDCH62POL2RM5C309
	M3	L717HDCG62POL2RM5	L777HDCG62POL2RM5	L717HDCG62POL2RM5C309

Performance levels as per DIN 41 652/IEC 807-3

RECEPTACLE STRAIGHT PCB – REAR INSERTS

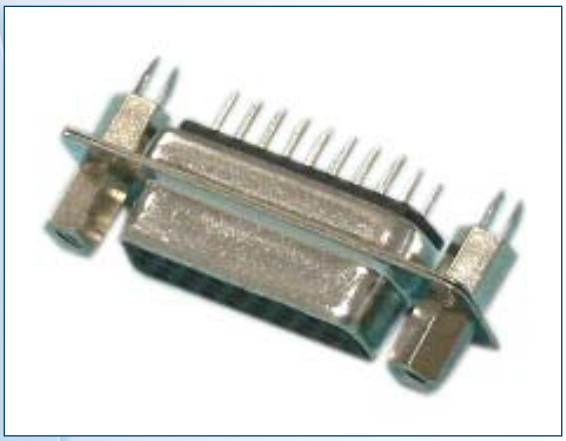

Specifications:

- Contact Resistance: 20 mΩ Max
- Insulator Resistance: 1000 MΩ Min at 500V DC
- Current Rating: 3A
- Dielectric Withstanding Voltage: 1000V AC for 1 minute
- Operating Temperature: -55°c to +105°c

Materials:

- Contact: Bronze
- Housing: Glass-filled thermoplastic, UL94V-0
- Shell: Steel, Tin plated

Dimensions:

Nb of Contacts	A	B	C
15	30,89	24,99	16,33
26	39,10	33,32	24,66
44	53,09	47,04	38,38
62	69,40	63,50	54,84

See page 42 for PCB Layout

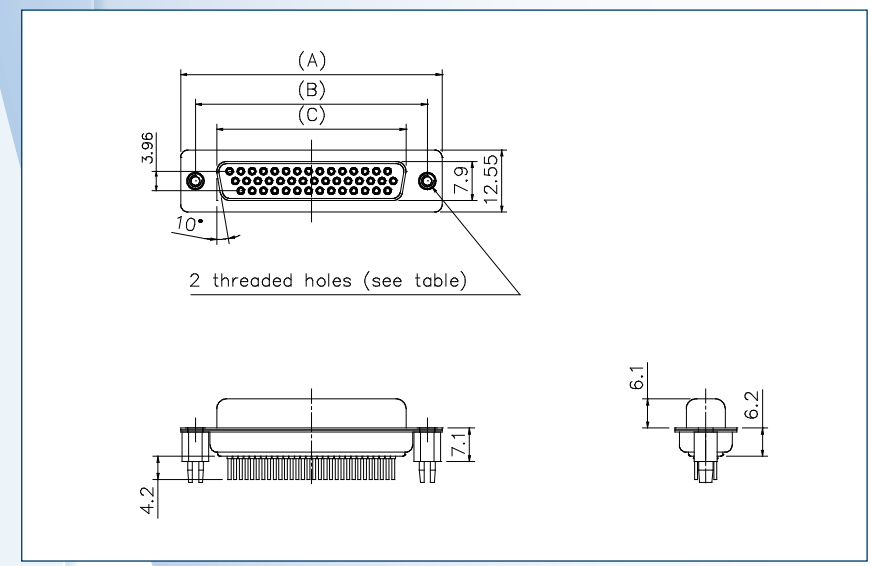

Part Numbers :

Nb of Contacts	Theaded holes	Performance Level 3 (flash Gold)	Performance Level 2 (0,38 µm Gold)	Performance Level 1 (0,76 µm Gold)
15	UNC #4-40	L77HDEH15SOL2RM5	L177HDEH15SOL2RM5	L77HDEH15SOL2RM5C309
	M3	L77HDEG15SOL2RM5	L177HDEG15SOL2RM5	L77HDEG15SOL2RM5C309
26	UNC #4-40	L77HDAH26SOL2RM5	L177HDAH26SOL2RM5	L77HDAH26SOL2RM5C309
	M3	L77HDAG26SOL2RM5	L177HDAG26SOL2RM5	L77HDAG26SOL2RM5C309
44	UNC #4-40	L77HDBH44SOL2RM5	L177HDBH44SOL2RM5	L77HDBH44SOL2RM5C309
	M3	L77HDBG44SOL2RM5	L177HDBG44SOL2RM5	L77HDBG44SOL2RM5C309
62	UNC #4-40	L77HDCH62SOL2RM5	L177HDCH62SOL2RM5	L77HDCH62SOL2RM5C309
	M3	L77HDCG62SOL2RM5	L177HDCG62SOL2RM5	L77HDCG62SOL2RM5C309

Performance levels as per DIN 41 652/IEC 807-3

PLUG STRAIGHT PCB – FRONT SCREWLOCKS

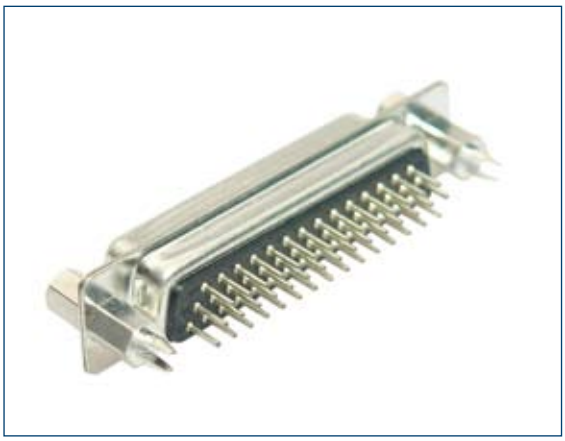

Specifications:

- Contact Resistance: 20 mΩ Max
- Insulator Resistance: 1000 MΩ Min at 500V DC
- Current Rating: 3A
- Dielectric Withstanding Voltage: 1000V AC for 1 minute
- Operating Temperature: -55°c to +105°c

Materials:

- Contact: Brass
- Housing: Glass-filled thermoplastic, UL94V-0
- Shell: Steel, Tin plated

Dimensions:

Nb of Contacts	A	B	C
15	30,89	24,99	16,92
26	39,10	33,32	25,25
44	53,09	47,04	38,96
62	69,40	63,50	55,42

See page 42 for PCB Layout

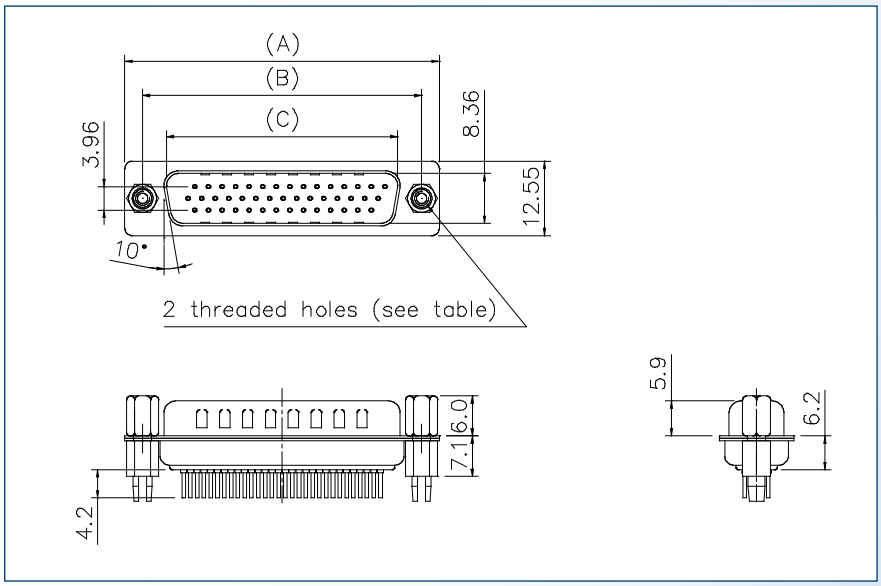

Part Numbers :

Nb of Contacts	Theaded holes	Performance Level 3 (flash Gold)	Performance Level 2 (0,38 µm Gold)	Performance Level 1 (0,76 µm Gold)
15	UNC #4-40	L717HDEH15POL2RM8	L777HDEH15POL2RM8	L717HDEH15POL2RM8C309
	M3	L717HDEG15POL2RM8	L777HDEG15POL2RM8	L717HDEG15POL2RM8C309
26	UNC #4-40	L717HDAH26POL2RM8	L777HDAH26POL2RM8	L717HDAH26POL2RM8C309
	M3	L717HDAG26POL2RM8	L777HDAG26POL2RM8	L717HDAG26POL2RM8C309
44	UNC #4-40	L717HDBH44POL2RM8	L777HDBH44POL2RM8	L717HDBH44POL2RM8C309
	M3	L717HDBG44POL2RM8	L777HDBG44POL2RM8	L717HDBG44POL2RM8C309
62	UNC #4-40	L717HDCH62POL2RM8	L777HDCH62POL2RM8	L717HDCH62POL2RM8C309
	M3	L717HDCG62POL2RM8	L777HDCG62POL2RM8	L717HDCG62POL2RM8C309

Performance levels as per DIN 41 652/IEC 807-3

RECEPTACLE STRAIGHT PCB – FRONT SCREWLOCKS

Specifications:

- Contact Resistance: 20 mΩ Max
- Insulator Resistance: 1000 MΩ Min at 500V DC
- Current Rating: 3A
- Dielectric Withstanding Voltage: 1000V AC for 1 minute
- Operating Temperature: -55°c to +105°c

Materials:

- Contact: Bronze
- Housing: Glass-filled thermoplastic, UL94V-0
- Shell: Steel, Tin plated

Dimensions:

Nb of Contacts	A	B	C
15	30,89	24,99	16,33
26	39,10	33,32	24,66
44	53,09	47,04	38,38
62	69,40	63,50	54,84

See page 42 for PCB Layout

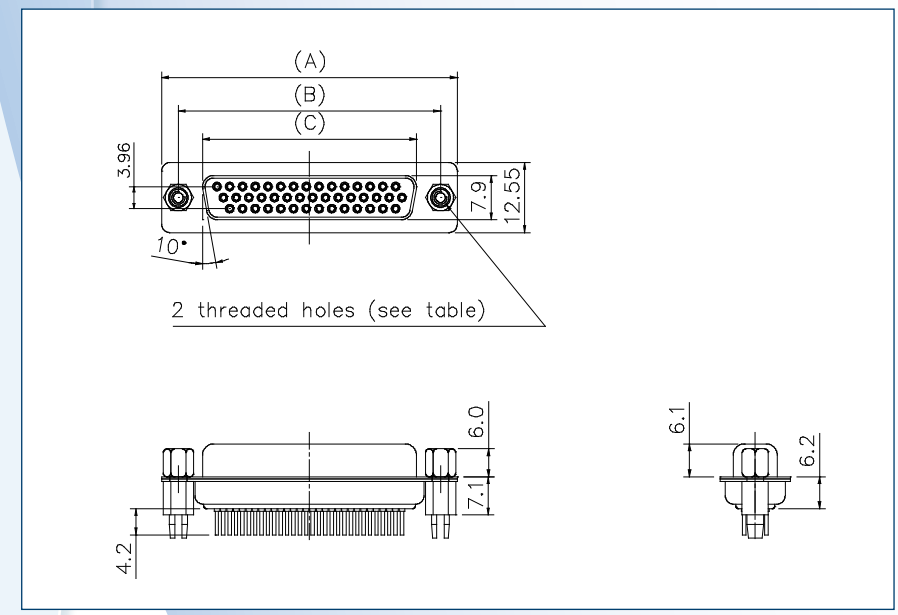

Part Numbers :

Nb of Contacts	Theaded holes	Performance Level 3 (flash Gold)	Performance Level 2 (0,38 µm Gold)	Performance Level 1 (0,76 µm Gold)
15	UNC #4-40	L77HDEH15SOL2RM8	L177HDEH15SOL2RM8	L77HDEH15SOL2RM8C309
	M3	L77HDEG15SOL2RM8	L177HDEG15SOL2RM8	L77HDEG15SOL2RM8C309
26	UNC #4-40	L77HDAH26SOL2RM8	L177HDAH26SOL2RM8	L77HDAH26SOL2RM8C309
	M3	L77HDAG26SOL2RM8	L177HDAG26SOL2RM8	L77HDAG26SOL2RM8C309
44	UNC #4-40	L77HDBH44SOL2RM8	L177HDBH44SOL2RM8	L77HDBH44SOL2RM8C309
	M3	L77HDBG44SOL2RM8	L177HDBG44SOL2RM8	L77HDBG44SOL2RM8C309
62	UNC #4-40	L77HDCH62SOL2RM8	L177HDCH62SOL2RM8	L77HDCH62SOL2RM8C309
	M3	L77HDCG62SOL2RM8	L177HDCG62SOL2RM8	L77HDCG62SOL2RM8C309

Performance levels as per DIN 41 652/IEC 807-3

PLUG RIGHT ANGLE – REAR INSERTS

Specifications:

- Contact Resistance: 20 mΩ Max
- Insulator Resistance: 1000 MΩ Min at 500V DC
- Current Rating: 3A
- Dielectric Withstanding Voltage: 1000V AC for 1 minute
- Operating Temperature: -55°c to +105°c

Materials:

- Contact: Brass
- Housing: Glass-filled thermoplastic, UL94V-0
- Shell: Steel, Tin plated

Dimensions:

Nb of Contacts	A	B	C
15	30,89	24,99	16,92
26	39,10	33,32	25,25
44	53,09	47,04	38,96
62	69,40	63,50	55,42

See page 42 for PCB Layout

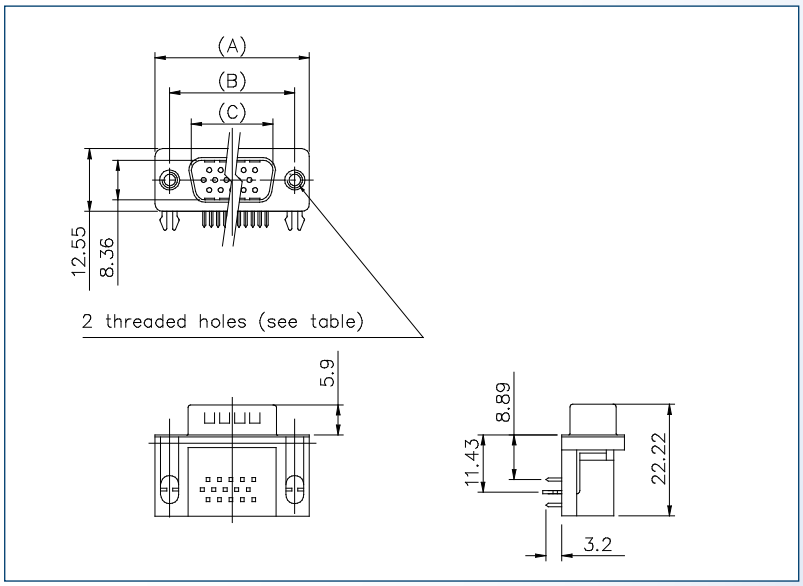

Part Numbers :

Nb of Contacts	Threaded holes	Performance Level 3 (flash Gold)	Performance Level 2 (0,38 µm Gold)	Performance Level 1 (0,76 µm Gold)
15	UNC #4-40	L717HDE15PD1CH4R	L777HDE15PD1CH4R	L717HDE15PD1CH4RC309
	M3	L717HDE15PD1CH3R	L777HDE15PD1CH3R	L717HDE15PD1CH3RC309
26	UNC #4-40	L717HDA26PD1CH4R	L777HDA26PD1CH4R	L717HDA26PD1CH4RC309
	M3	L717HDA26PD1CH3R	L777HDA26PD1CH3R	L717HDA26PD1CH3RC309
44	UNC #4-40	L717HDB44PD1CH4R	L777HDB44PD1CH4R	L717HDB44PD1CH4RC309
	M3	L717HDB44PD1CH3R	L777HDB44PD1CH3R	L717HDB44PD1CH3RC309
62	UNC #4-40	L717HDC62PD1CH4R	L777HDC62PD1CH4R	L717HDC62PD1CH4RC309
	M3	L717HDC62PD1CH3R	L777HDC62PD1CH3R	L717HDC62PD1CH3RC309

Performance levels as per DIN 41 652/IEC 807-3

RECEPTACLE RIGHT ANGLE – REAR INSERTS

Specifications:

- Contact Resistance: 20 mΩ Max
- Insulator Resistance: 1000 MΩ Min at 500V DC
- Current Rating: 3A
- Dielectric Withstanding Voltage: 1000V AC for 1 minute
- Operating Temperature: -55°c to +105°c

Materials:

- Contact: Bronze
- Housing: Glass-filled thermoplastic, UL94V-0
- Shell: Steel, Tin plated

Dimensions:

Nb of Contacts	A	B	C
15	30,89	24,99	16,33
26	39,10	33,32	24,66
44	53,09	47,04	38,38
62	69,40	63,50	54,84

See page 42 for PCB Layout

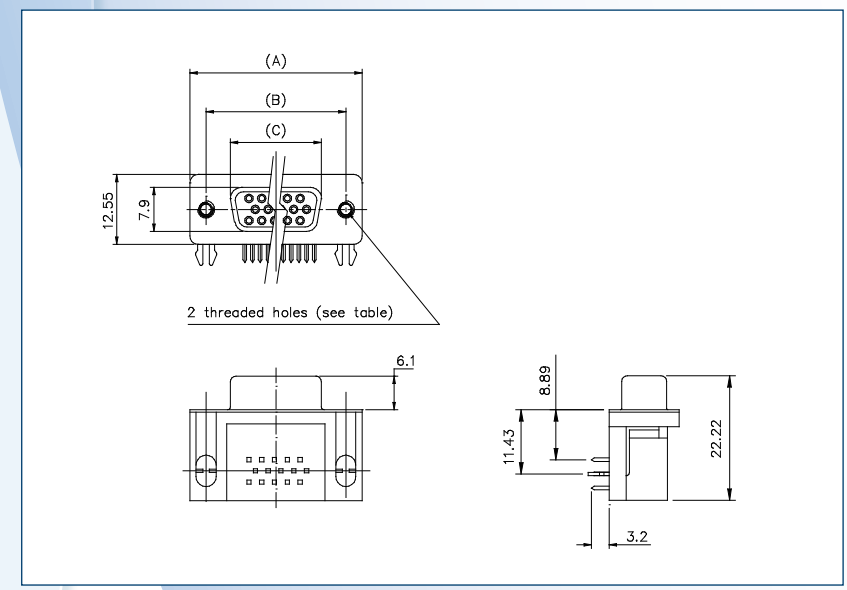

Part Numbers :

Nb of Contacts	Threaded holes	Performance Level 3 (flash Gold)	Performance Level 2 (0,38 µm Gold)	Performance Level 1 (0,76 µm Gold)
15	UNC #4-40	L77HDE15SD1CH4R	L177HDE15SD1CH4R	L77HDE15SD1CH4RC309
	M3	L77HDE15SD1CH3R	L177HDE15SD1CH3R	L77HDE15SD1CH3RC309
26	UNC #4-40	L77HDA26SD1CH4R	L177HDA26SD1CH4R	L77HDA26SD1CH4RC309
	M3	L77HDA26SD1CH3R	L177HDA26SD1CH3R	L77HDA26SD1CH3RC309
44	UNC #4-40	L77HDB44SD1CH4R	L177HDB44SD1CH4R	L77HDB44SD1CH4RC309
	M3	L77HDB44SD1CH3R	L177HDB44SD1CH3R	L77HDB44SD1CH3RC309
62	UNC #4-40	L77HDC62SD1CH4R	L177HDC62SD1CH4R	L77HDC62SD1CH4RC309
	M3	L77HDC62SD1CH3R	L177HDC62SD1CH3R	L77HDC62SD1CH3RC309

Performance levels as per DIN 41 652/IEC 807-3

PLUG RIGHT ANGLE – FRONT SCREWLOCKS

Specifications:

- Contact Resistance: 20 mΩ Max
- Insulator Resistance: 1000 MΩ Min at 500V DC
- Current Rating: 3A
- Dielectric Withstanding Voltage: 1000V AC for 1 minute
- Operating Temperature: -55°c to +105°c

Materials:

- Contact: Brass
- Housing: Glass-filled thermoplastic, UL94V-0
- Shell: Steel, Tin plated

Dimensions:

Nb of Contacts	A	B	C
15	30,89	24,99	16,92
26	39,10	33,32	25,25
44	53,09	47,04	38,96
62	69,40	63,50	55,42

See page 42 for PCB Layout

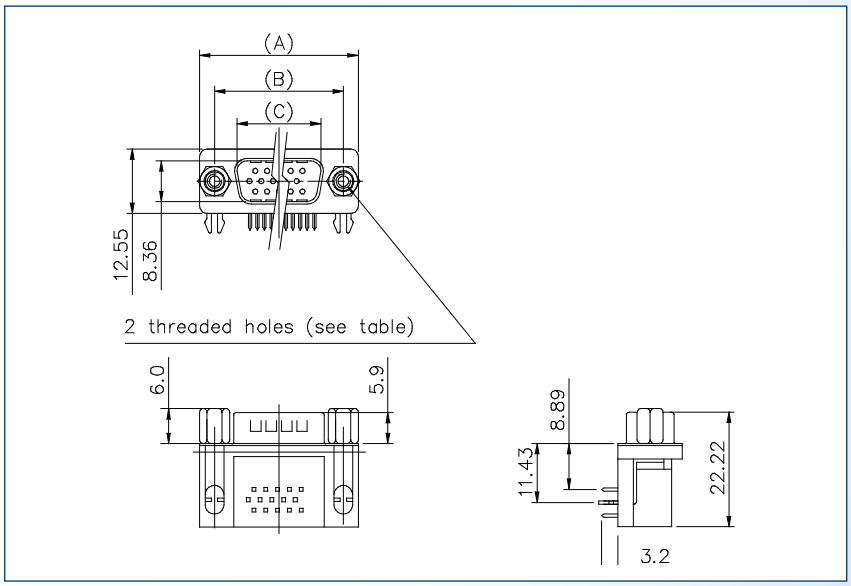

Part Numbers :

Nb of Contacts	Threaded holes	Performance Level 3 (flash Gold)	Performance Level 2 (0,38 µm Gold)	Performance Level 1 (0,76 µm Gold)
15	UNC #4-40	L717HDE15PD1CH4F	L777HDE15PD1CH4F	L717HDE15PD1CH4FC309
	M3	L717HDE15PD1CH3F	L777HDE15PD1CH3F	L717HDE15PD1CH3FC309
26	UNC #4-40	L717HDA26PD1CH4F	L777HDA26PD1CH4F	L717HDA26PD1CH4FC309
	M3	L717HDA26PD1CH3F	L777HDA26PD1CH3F	L717HDA26PD1CH3FC309
44	UNC #4-40	L717HDB44PD1CH4F	L777HDB44PD1CH4F	L717HDB44PD1CH4FC309
	M3	L717HDB44PD1CH3F	L777HDB44PD1CH3F	L717HDB44PD1CH3FC309
62	UNC #4-40	L717HDC62PD1CH4F	L777HDC62PD1CH4F	L717HDC62PD1CH4FC309
	M3	L717HDC62PD1CH3F	L777HDC62PD1CH3F	L717HDC62PD1CH3FC309

Performance levels as per DIN 41 652/IEC 807-3

RECEPTACLE RIGHT ANGLE – FRONT SCREWLOCKS

Specifications:

- Contact Resistance: 20 mΩ Max
- Insulator Resistance: 1000 MΩ Min at 500V DC
- Current Rating: 3A
- Dielectric Withstanding Voltage: 1000V AC for 1 minute
- Operating Temperature: -55°c to +105°c

Materials:

- Contact: Bronze
- Housing: Glass-filled thermoplastic, UL94V-0
- Shell: Steel, Tin plated

Dimensions:

Nb of Contacts	A	B	C
15	30,89	24,99	16,33
26	39,10	33,32	24,66
44	53,09	47,04	38,38
62	69,40	63,50	54,84

See page 42 for PCB Layout

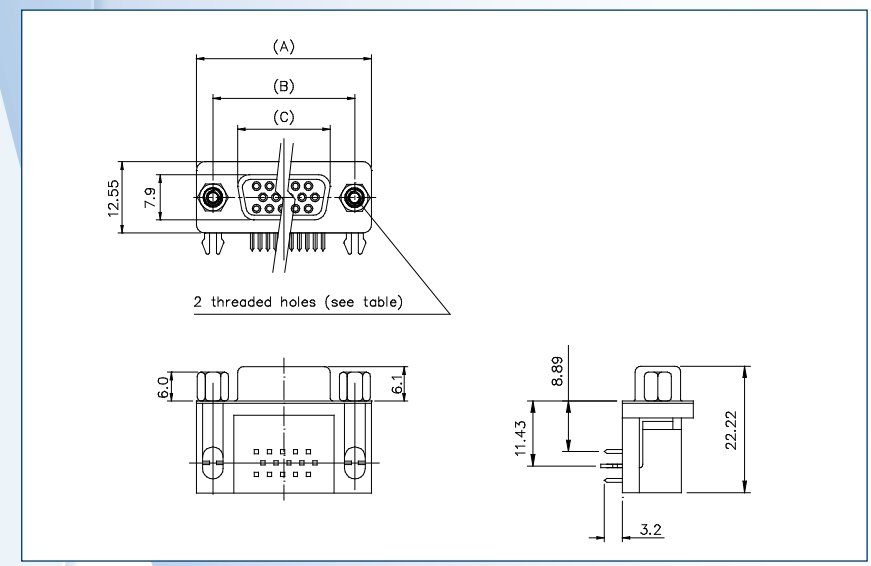

Part Numbers :

Nb of Contacts	Threaded holes	Performance Level 3 (flash Gold)	Performance Level 2 (0,38 µm Gold)	Performance Level 1 (0,76 µm Gold)
15	UNC #4-40	L77HDE15SD1CH4F	L177HDE15SD1CH4F	L77HDE15SD1CH4FC309
	M3	L77HDE15SD1CH3F	L177HDE15SD1CH3F	L77HDE15SD1CH3FC309
26	UNC #4-40	L77HDA26SD1CH4F	L177HDA26SD1CH4F	L77HDA26SD1CH4FC309
	M3	L77HDA26SD1CH3F	L177HDA26SD1CH3F	L77HDA26SD1CH3FC309
44	UNC #4-40	L77HDB44SD1CH4F	L177HDB44SD1CH4F	L77HDB44SD1CH4FC309
	M3	L77HDB44SD1CH3F	L177HDB44SD1CH3F	L77HDB44SD1CH3FC309
62	UNC #4-40	L77HDC62SD1CH4F	L177HDC62SD1CH4F	L77HDC62SD1CH4FC309
	M3	L77HDC62SD1CH3F	L177HDC62SD1CH3F	L77HDC62SD1CH3FC309

Performance levels as per DIN 41 652/IEC 807-3

PLASTIC HOOD – TOP ENTRY

Specifications:

- Snap-in hood
- UNC #4-40 jackscrews
- Metallic cable clamp
- Cable diameter: up to 11,5 mm

Materials:

- Black thermoplastic UL rated

Dimensions:

Size	A	B	C
9	31,5	18,0	34,0
15	40,0	26,0	34,0
25	53,5	28,0	40,0
37	67,5	55,0	40,0

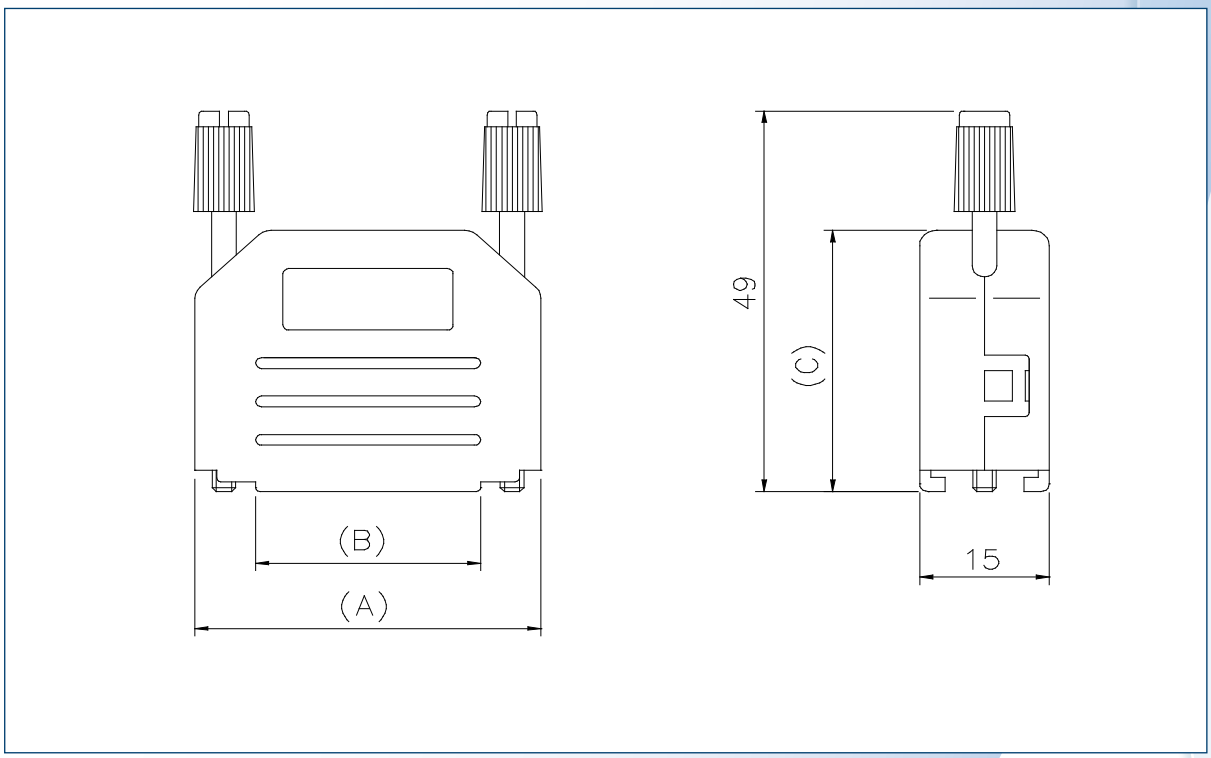

Part Numbers :

Size	Part Number
9	L17DPPK09JS
15	L17DPPK15JS
25	L17DPPK25JS
37	L17DPPK37JS

PLASTIC HOOD – SIDE ENTRY

Specifications:

- Snap-in hood
- UNC #4-40 jackscrews
- Metallic cable clamp
- Cable diameter: up to 11,5 mm
- Attenuation factor: >40 dB between 30 MHz and 1 GHz

Materials:

- Metallized thermoplastic UL rated

Dimensions:

Size	A	B
9	31,5	40,0
15	40,0	40,0
25	53,5	43,0
37	71,3	40,0

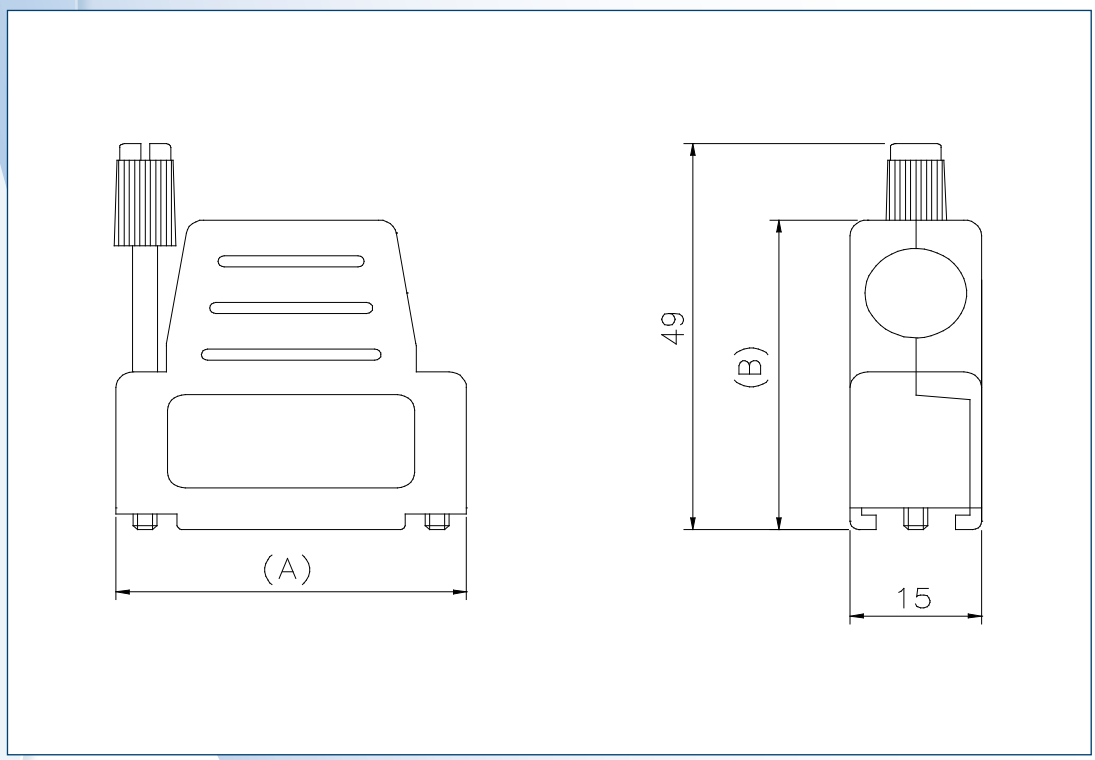

Part Numbers :

Size	Part Number
9	L17DSSK09TP
15	L17DSSK15TP
25	L17DSSK25TP
37	L17DSSK37TP

PLASTIC METALLIZED HOOD – TOP ENTRY

Specifications:

- 2 piece screwed hood
- UNC #4-40 jackscrews
- Cable diameter: 4 to 13 mm
- Attenuation factor: >40 dB between 30 MHz and 1 GHz

Materials:

- Shells: Die cast zinc, nickel plated
- Cable strainrelief: steel fiber reinforced thermoplastic

Dimensions:

Size	A	B
9	32,5	38,0
15	41,0	38,0
25	54,5	40,0
37	71,0	40,0

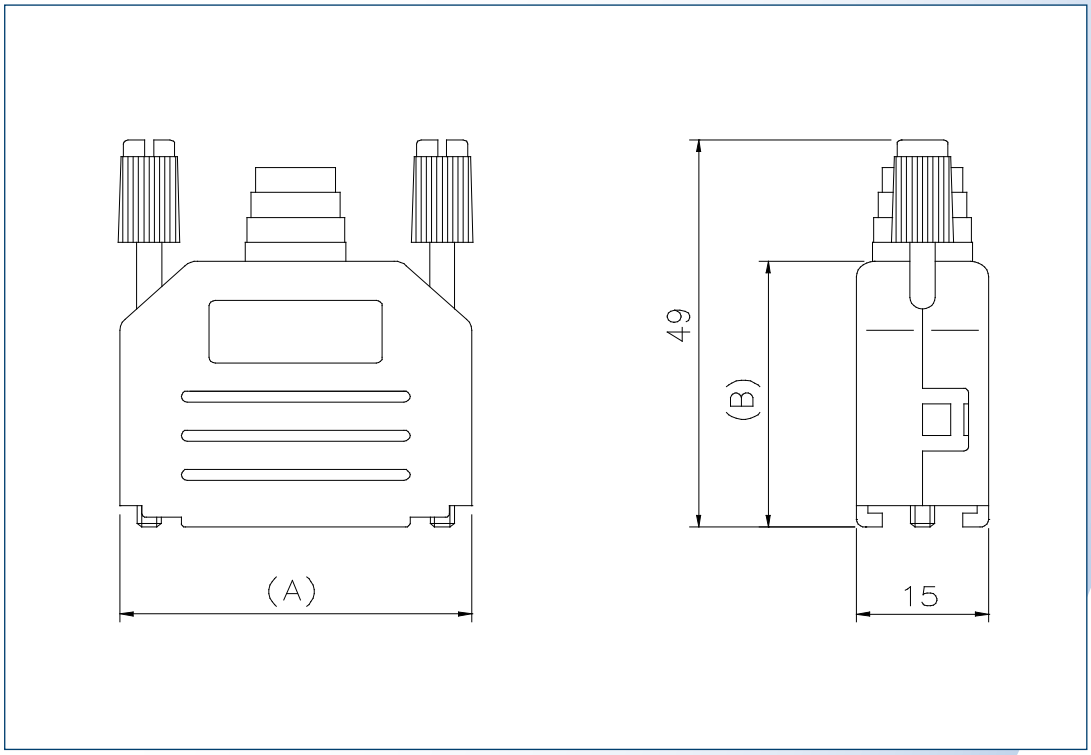

Part Numbers :

Size	Part Number
9	L17DPPK09TM
15	L17DPPK15TM
25	L17DPPK25TM
37	L17DPPK37TM

PLASTIC METALLIZED HOOD – SIDE ENTRY

Specifications:

- Snap-in hood
- UNC #4-40 jackscrews
- Metallic cable clamp
- Cable diameter: up to 11,5 mm
- Attenuation factor: >40 dB between 30 MHz and 1 GHz

Materials:

- Metallized thermoplastic UL rated

Dimensions:

Size	A	B
9	31,5	40,0
15	40,0	40,0
25	53,5	43,0
37	71,3	40,0

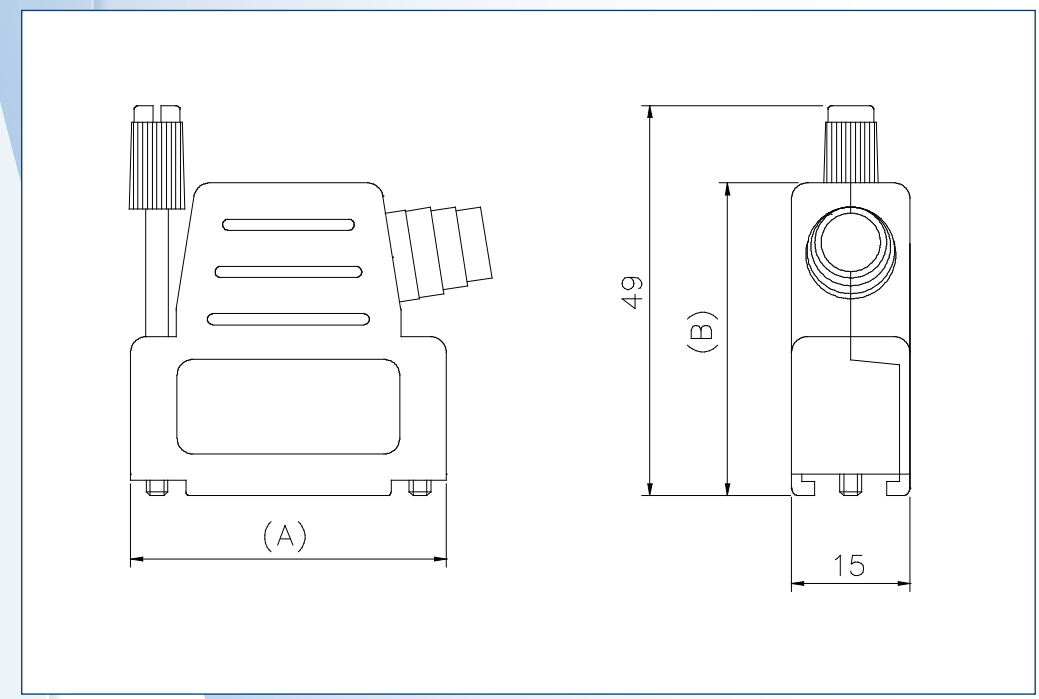

Part Numbers :

Size	Part Number
9	L17DSSK09TM
15	L17DSSK15TM
25	L17DSSK25TM
37	L17DSSK37TM

METALLIC HOOD – TOP ENTRY

Specifications:

- 2 piece screwed hood
- UNC #4-40 jackscrews
- Cable diameter: 4 to 13 mm
- Attenuation factor: >40 dB between 30 MHz and 1 GHz

Materials:

- Shells: Die cast zinc, nickel plated
- Cable strainrelief: steel fiber reinforced thermoplastic

Dimensions:

Size	A	B
9	21,0	38,3
15	39,5	40,5
25	54,4	47,3
37	70,9	52,2

For detailed specifications check www.amphenolinfocom.eu

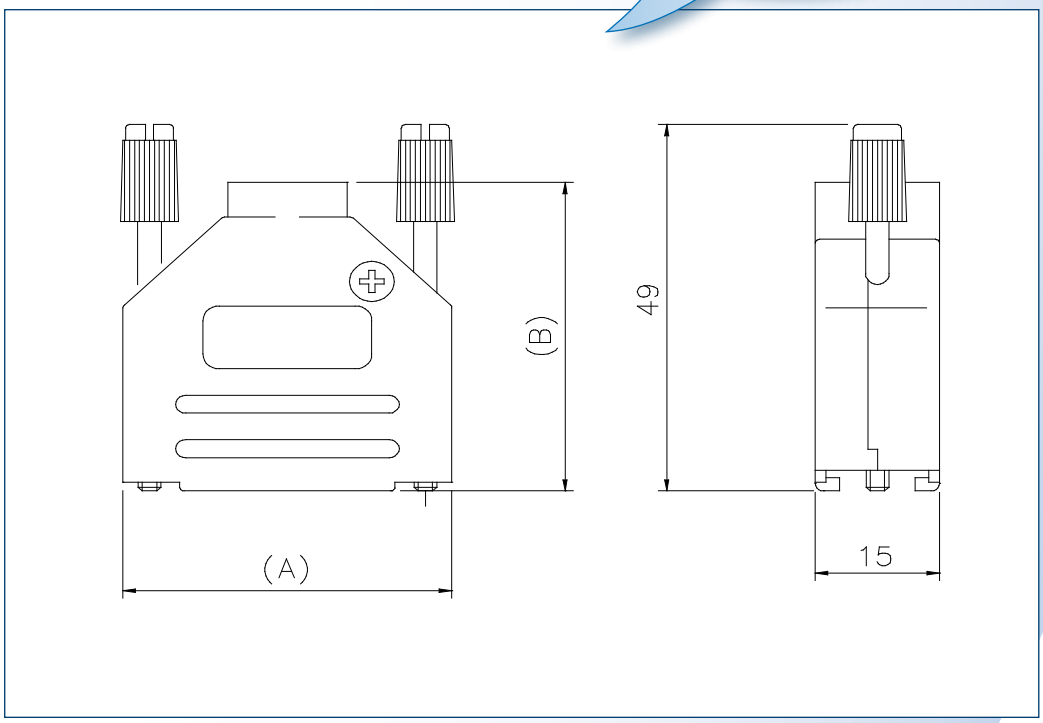

Part Numbers :

Size	Part Number
9	L17DTZK9K
15	L17DTZK15K
25	L17DTZK25K
37	L17DTZK37K

METALLIC HOOD – SIDE ENTRY

Specifications:

- 2 piece screwed hood
- UNC #4-40 jackscrews
- Cable diameter: 4 to 13 mm
- Attenuation factor: >40 dB between 30 MHz and 1 GHz

Materials:

- Shells: Die cast zinc, nickel plated
- Cable strainrelief: steel fiber reinforced thermoplastic

Dimensions:

Size	A	B
9	31,0	36,2
15	39,5	40,2
25	53,2	40,2
37	69,7	40,2

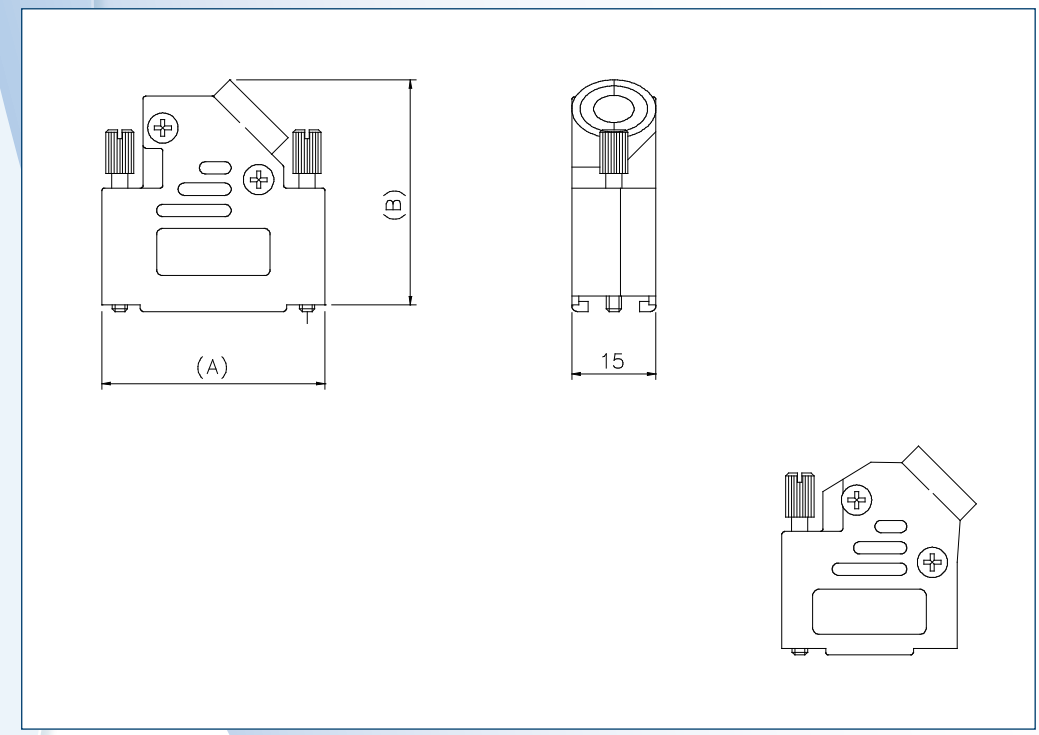

Part Numbers :

Size	Part Number
9	L17DVZK9K
15	L17DVZK15K
25	L17DVZK25K
37	L17DVZK37K

FILTERED D-SUB

FILTERED D-SUB MALE TO FEMALE ADAPTER

Specifications:

- Contact Resistance: 15 milliohms maximum
- Current Rating: 5 Amps DC maximum
- Operating Temperature: -40°C to +85°C

Materials:

- Contacts: Phosphor Bronze
- Insulator: Engineering Thermoplastic
- Shell: Tin plated steel

Part Numbers :

No of contacts	470 pF filter	820 pF filter	5600 pF filter
9	FCE17-E09AD-210	FCE17-E09AD-240	FCE17-E09AD-290
15	FCE17-A15AD-210	FCE17-A15AD-240	FCE17-A15AD-290
25	FCE17-B25AD-210	FCE17-B25AD-240	FCE17-B25AD-290
37	FCE17-C37AD-210	FCE17-C37AD-240	FCE17-C37AD-290

FILTERED D-SUB CONNECTOR PIN RIGHT ANGLE, 8.08 (.318”) FOOTPRINT

Specifications:

- Contact Resistance: 15 milliohms maximum
- Insulation Resistance: 3000 Megohms minimum
- Current Rating: 5 Amps DC maximum
- Operating Temperature: -40°C to +85°C

Materials:

- Contacts: Phosphor Bronze
- Insulator: Engineering Thermoplastic
- Shell: Steel, Tin plated

Part Numbers :

No of contacts	470 pF filter	820 pF filter
9	FCE17-E09PA-410	FCE17-E09PA-440
15	FCE17-A15PA-410	FCE17-A15PA-440
25	FCE17-B25PA-410	FCE17-B25PA-440
37	FCE17-C37PA-410	FCE17-C37PA-440

FILTERED D-SUB CONNECTOR SOCKET RIGHT ANGLE, 8.08 (.318”) FOOTPRINT

Specifications:

- Contact Resistance: 15 milliohms maximum
- Insulation Resistance: 3000 Megohms minimum
- Current Rating: 5 Amps DC maximum
- Operating Temperature: -40°C to +85°C

Materials:

- Contacts: Phosphor Bronze
- Insulator: Engineering Thermoplastic
- Shell: Steel, Tin plated

Part Numbers :

No of contacts	470 pF filter	820 pF filter
9	FCE17-E09SA-410	FCE17-E09SA-440
15	FCE17-A15SA-410	FCE17-A15SA-440
25	FCE17-B25SA-410	FCE17-B25SA-440
37	FCE17-C37SA-410	FCE17-C37SA-440

FILTERED D-SUB SOLDER CUP TAILS PIN

Specifications:

- Contact Resistance: 15 milliohms maximum
- Insulation Resistance: 3000 Megohms minimum
- Current Rating: 5 Amps DC maximum
- Operating Temperature: -40°C to +85°C

Materials :

- Contacts: Phosphor Bronze
- Insulator: Engineering Thermoplastic
- (Accepts up to 20 AWG Wire)
- Shell: Steel, Tin plated

Part Numbers :

No of contacts	470 pF filter	820 pF filter	5600 pF filter
9	FCE17-E09PM-210	FCE17-E09PM-240	FCE17-E09PM-290
15	FCE17-A15PM-210	FCE17-A15PM-240	FCE17-A15PM-290
25	FCE17-B25PM-210	FCE17-B25PM-240	FCE17-B25PM-290
37	FCE17-C37PM-210	FCE17-C37PM-240	FCE17-C37PM-290

FILTERED D-SUB SOLDER CUP TAILS SOCKET

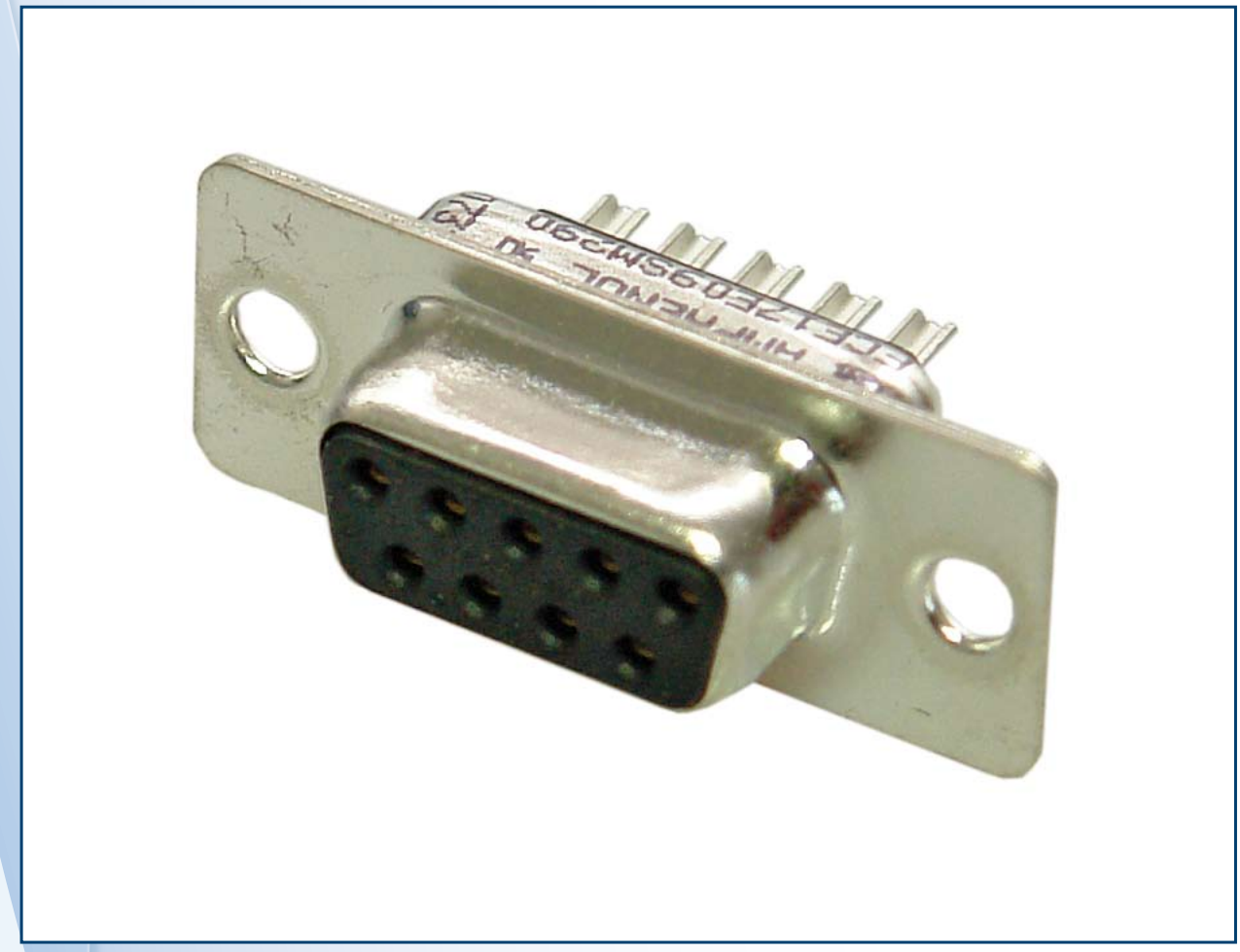

Specifications:

- Contact Resistance: 15 milliohms maximum
- Insulation Resistance: 3000 Megohms minimum
- Current Rating: 5 Amps DC maximum
- Operating Temperature: -40°C to +85°C

Materials:

- Contacts: Phosphor Bronze
- Insulator: Engineering Thermoplastic
- (Accepts up to 20 AWG Wire)
- Shell: Steel, Tin plated

Dimensions :

No of contacts	470 pF filter	820 pF filter	5600 pF filter
9	FCE17-E09SM-210	FCE17-E09SM-240	FCE17-E09SM-290
15	FCE17-A15SM-210	FCE17-A15SM-240	FCE17-A15SM-290
25	FCE17-B25SM-210	FCE17-B25SM-240	FCE17-B25SM-290
37	FCE17-C37SM-210	FCE17-C37SM-240	FCE17-C37SM-290

FILTERED D-SUB VERTICAL MOUNT PCB TAIL PIN

Specifications:

- Contact Resistance: 15 milliohms maximum
- Insulation Resistance: 3000 Megohms minimum
- Current Rating: 5 Amps DC maximum
- Operating Temperature: -40°C to +85°C

Materials :

- Contacts: Phosphor Bronze
- Insulator: Engineering Thermoplastic
- Shell: Steel, Tin plated

Part Numbers :

No of contacts	470 pF filter	820 pF filter
9	FCE17-E09SE-210	FCE17-E09SE-240
15	FCE17-A15SE-210	FCE17-A15SE-240
25	FCE17-B25SE-210	FCE17-B25SE-240
37	FCE17-C37SE-210	FCE17-C37SE-240

FILTERED D-SUB VERTICAL MOUNT PCB TAIL SOCKET

Specifications:

- Contact Resistance: 15 milliohms maximum
- Insulation Resistance: 3000 Megohms minimum
- Current Rating: 5 Amps DC maximum
- Operating Temperature: -40°C to +85°C

Materials :

- Contacts: Phosphor Bronze
- Insulator: Engineering Thermoplastic
- Shell: Steel, Tin plated

Part Numbers :

No of contacts	470 pF filter	820 pF filter
9	FCE17-E09PE-210	FCE17-E09PE-240
15	FCE17-A15PE-210	FCE17-A15PE-240
25	FCE17-B25PE-210	FCE17-B25PE-240
37	FCE17-C37PE-210	FCE17-C37PE-240

MODULAR JACKS

RJHSE SERIES RJ45

Specifications:

Contact Resistance: 20 milliohms maximum
Insulation Resistance: 500 Megohms minimum
Current Rating: 1,5 Amps DC maximum
Voltage Rating: 125 Volts AC

Materials:

Contacts: Phosphor Bronze; Gold over Nickel
Insert: High temp thermoplastic suitable for reflow solder process. Wave solder process recommended for connectors with LED's
Shell: Copper Alloy; Nickel plated with pure tin dipped PCB tail

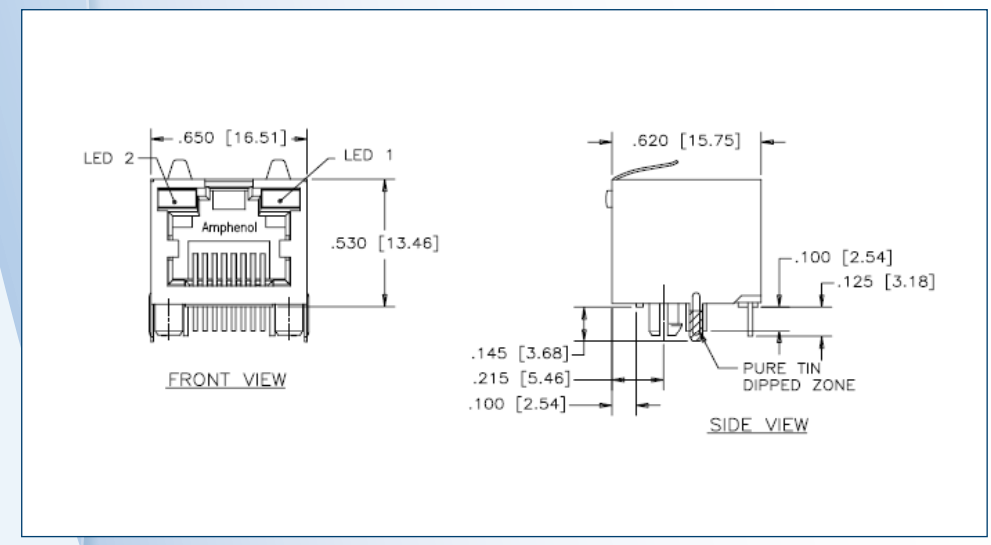

Part Numbers:

Part number	Shielding	LED	Number of ports
RJHSE-5080	No	Blocked	Single port
RJHSE-5081	No	Led 1 green, led 2 yellow	Single port
RJHSE-5084-04	No	Led 1 yellow, led 2 green	4 ports
RJHSE-5085	No	Led 1green, led 2 green	Single port
RJHSE-5085-02	No	Led 1green, led 2 green	2 ports
RJHSE-5380	Yes	Blocked	Single port
RJHSE-5381	Yes	Led 1 green, led 2 yellow	Single port
RJHSE-5381-04	Yes	Led 1 green, led 2 yellow	4 ports
RJHSE-5382	Yes	Led 1 green	Single port
RJHSE-5384	Yes	Led 1 yellow, led 2 green	Single port
RJHSE-5384-02	Yes	Led 1 yellow, led 2 green	2 ports
RJHSE-5385	Yes	Led 1green, led 2 green	Single port
RJSSE-5080	No	Blocked	Single port
RJSSE-5380	Yes	Blocked	Single port
RJSSE-5381-02	Yes	Led 1 green, led 2 yellow	2 ports

RJHSE SERIES RJ45 VERTICAL MOUNT

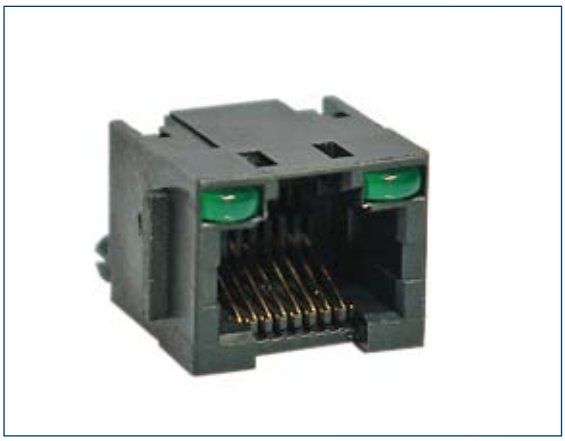

Specifications:

- Contact Resistance: 20 milliohms maximum
- Insulation Resistance: 500 Megohms minimum
- Current Rating: 1,5 Amps DC maximum
- Voltage Rating: 125 Volts AC

Materials:

- Contacts: Phosphor Bronze; Gold over Nickel
- Insert: High temp thermoplastic suitable for reflow solder process. Wave solder process recommended for connectors with LED's
- Shell: Copper Alloy; Nickel plated with pure tin dipped PCB tail

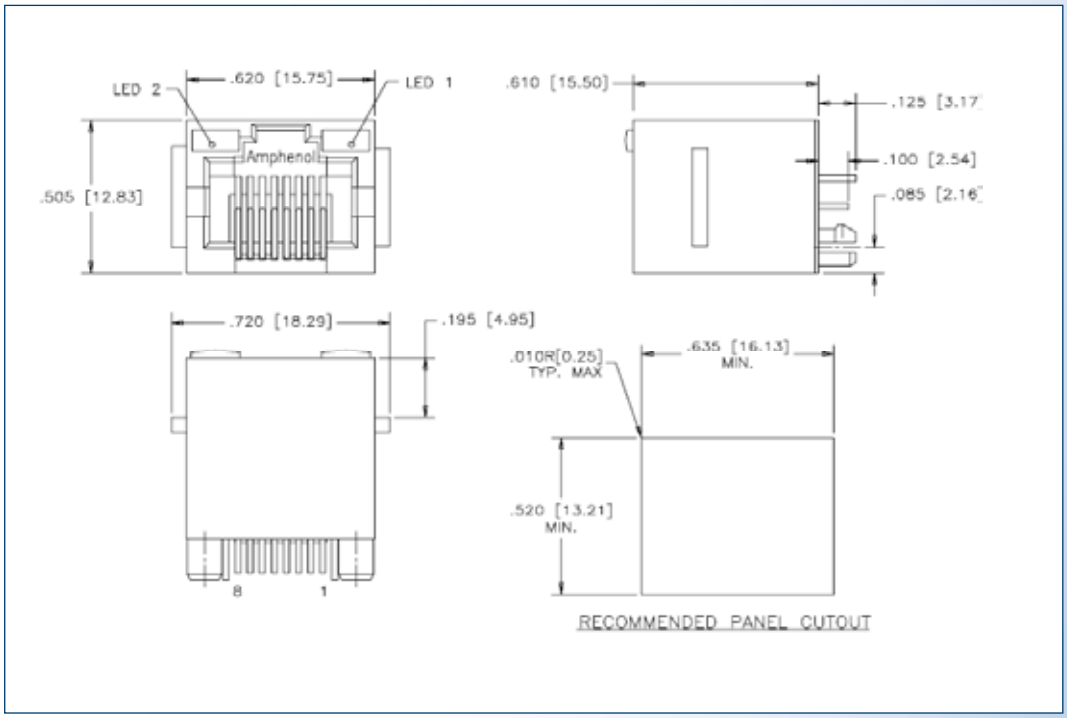

Part Numbers:

Part number	Shielding	LED
RJHSE-3080	No	Blocked
RJHSE-3081	No	Led 1 green, led 2 yellow
RJHSE-3085	No	Led 1green, led 2 green
RJHSE-3380	Yes	Blocked
RJHSE-3381	Yes	Led 1 green, led 2 yellow
RJHSE-338B	Yes	Led 1 + 2 – bi- colour red/green
RJHSE-3384	Yes	Led 1 yellow, led 2 green
RJHSE-3385	Yes	Led 1green, led 2 green
RJHSE-338A	Yes	Led 1 +2 – bi-colour yellow/green

RJSAE

Specifications:

- Contact Resistance: 20 milliohms maximum
- Insulation Resistance: 500 Megohms minimum
- Current Rating: 1,5 Amps DC maximum
- Voltage Rating: 125 Volts AC

Materials:

- Contacts: Phosphor Bronze; Gold over Nickel
- Insert: High temp thermoplastic suitable for reflow solder process. Wave solder process recommended for connectors with LED's
- Shell: Copper Alloy; Nickel plated with pure tin dipped PCB tail

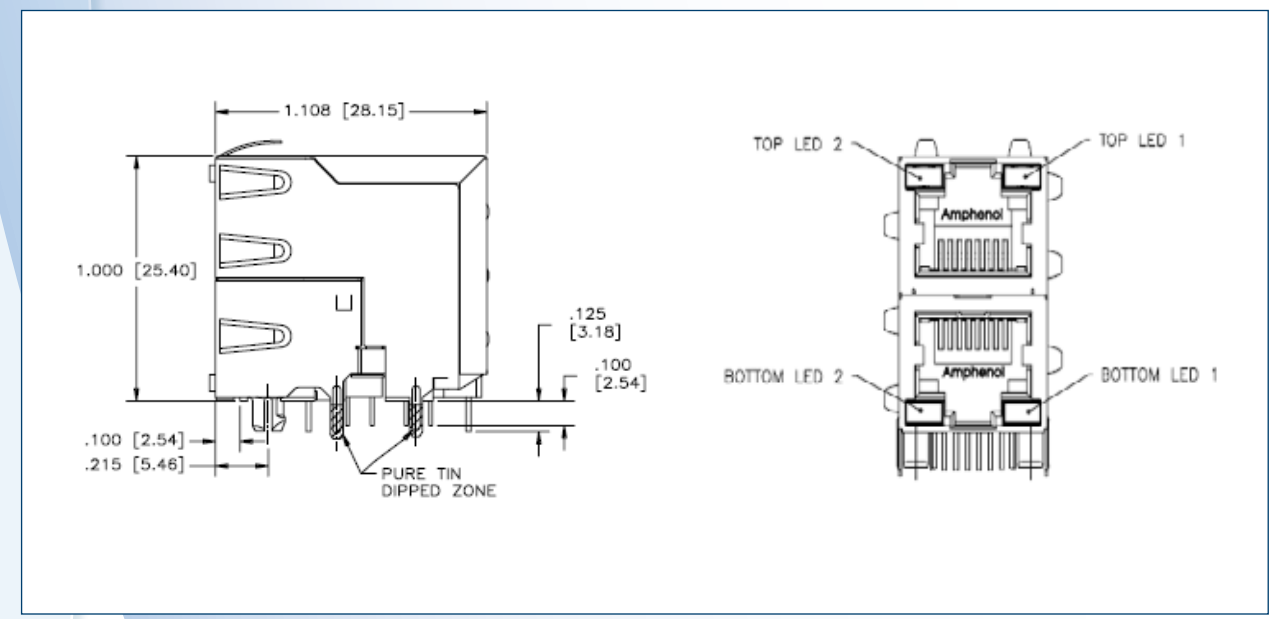

Part Numbers:

Part number	Number of ports	LED
RJSAE538102	2 ports (1 over 1)	Led 1 green, led 2 yellow
RJSAE538104	4 ports (2 over 2)	Led 1 green, led 2 yellow
RJSAE538108	8 ports (4 over 4)	Led 1 green, led 2 yellow
RJSAE538A02	2 ports (1 over 1)	Led 1 +2 – bi-colour yellow/green
RJSAE538A04	4 ports (2 over 2)	Led 1 +2 – bi-colour yellow/green
RJSAE538A08	8 ports (4 over 4)	Led 1 +2 – bi-colour yellow/green

FRJAE

Specifications:

- Contact Resistance: 20 milliohms maximum
- Insulation Resistance: 500 Megohms minimum
- Current Rating: 1,5 Amps
- Voltage Rating: 125 Volts AC

Materials:

- Contacts: Phosphor Bronze; Gold over 30µ inches (0.76 microns) over Nickel
- Insert: Thermoplastic Polyester (complies with UL 94V-0)
- Shield: Copper Alloy Nickel Plated
- Filter: High Impedance, High Resistivity, Ferrite Block

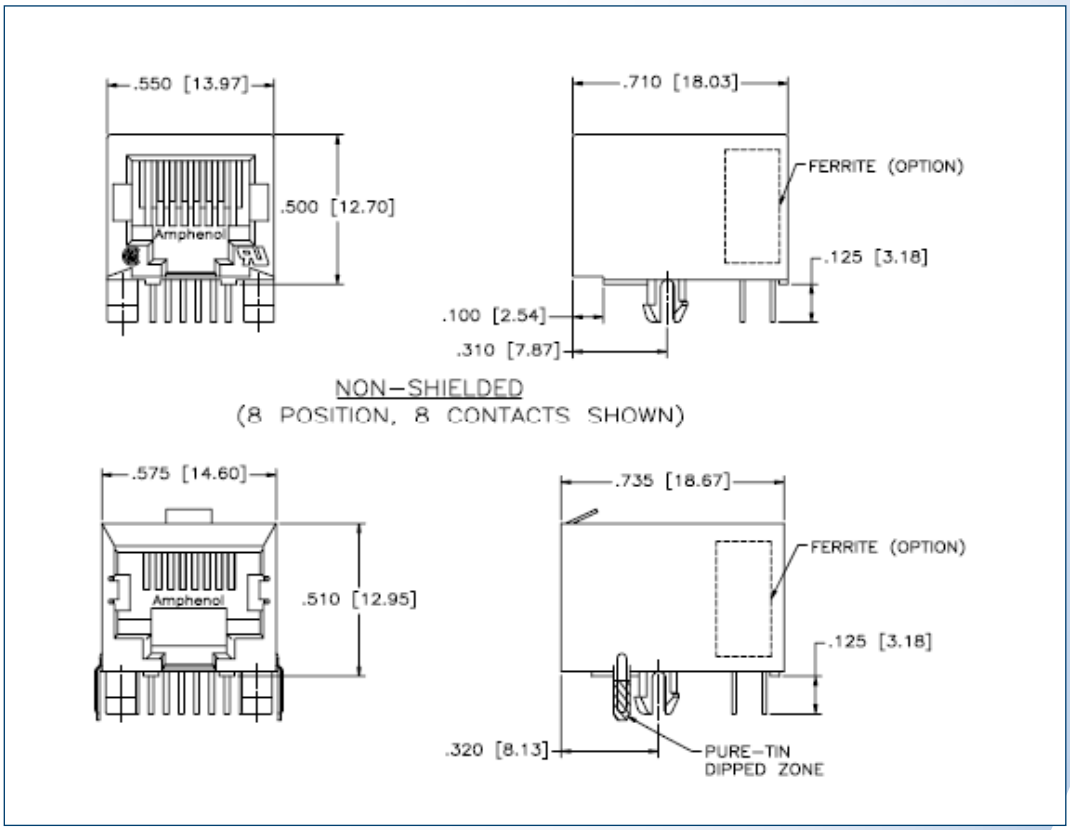

Part Numbers:

Part number	Options
FRJAE-408	Non filtered, non shielded
FRJAE-418	Filtered with front tab shield
FRJAE-438	Shield (front tab)
FRJAE-468	Filtered with rear tab shield
FRJAE-488	Shielded (rear tab)

RJMAG SINGLE PORT 10/100

PTH Cable Latch up, shielded, with side tabs, 5 cores

Specifications:

- Mating Cycles: 5000 mated/Unmated
- Insulator Resistance: 500 MΩ Min at 500V DC
- Dielectric Withstanding Voltage: 1000V AC for 1 minute
- Operating Temperature: -0°c to +70°c
- Storage Temperature: -40°c to +105°c
- Soldering Temperature: -235°c for 5 seconds

Materials:

- RJ Contact: Phosphor Bronze C5210, T=0.25mm
- Housing: Thermoplastic, UL94V-0 black
- Shielding: Brass, Nickel plated or Stainless Steel

Part Numbers:

Part number	Termination	LED 1 right	LED 2 left
RJMG163213101NR	4x75ohm, 68pf	Yellow	Green
RJMG163117101NR	4x75ohm, 1000pf transmit shunt choke	Green	Green
RJMG163217101NR		Yellow	Green
RJMG163118101NR	4x75ohm, 1000pf	Green	Green
RJMG163218101NR		Yellow	Green

RJMAG SINGLE PORT GIGABIT

LONG BODY, PTH, CABLE LATCH UP, 8 & 12 CORES

Specifications:

- Mating Cycles: 5000 mated/Unmated
- Insulator Resistance: 500 MΩ Min at 500V DC
- Dielectric Withstanding Voltage: 1000V AC for 1 minute
- Operating Temperature: -0°c to +70°c
- Storage Temperature: -40°c to +105°c
- Soldering Temperature: -235°c for 5 seconds

Materials:

- RJ Contact: Phosphor Bronze C5210, T=0.25mm
- Housing: Thermoplastic, UL94V-0 black
- Shielding: Brass, Nickel plated or Stainless Steel

Part Numbers:

Part number	Termination	Cores	LED 1 right	LED 2 left
RJMG201021110NR	4x75ohm, 1000pf	8	Green	Green
RJMG201021210NR			Green	Yellow
RJMG201021610NR			Green	Green/ Orange
RJMG201022610NR			Yellow	Green/ Orange
RJMG201021120NR		12	Green	Green

USB & FIREWIRE

USB

Specifications:

- Voltage Rating: 30 Vac (rms)
- Current Rating: 1 Amp maximum per contact
- Dielectric Withstanding Voltage: 750 VAC at sea level
- Insulation Resistance: 1000Mohm
- Capacitance: 2pF maximum
- Contact Resistance: 30 mohm maximum

Materials:

- Housing: Engineering thermoplastic, flammability UL94V-0
- Contacts: Copper alloy
- Shell: Copper alloy
- Shell plating: Nickel over copper underplate

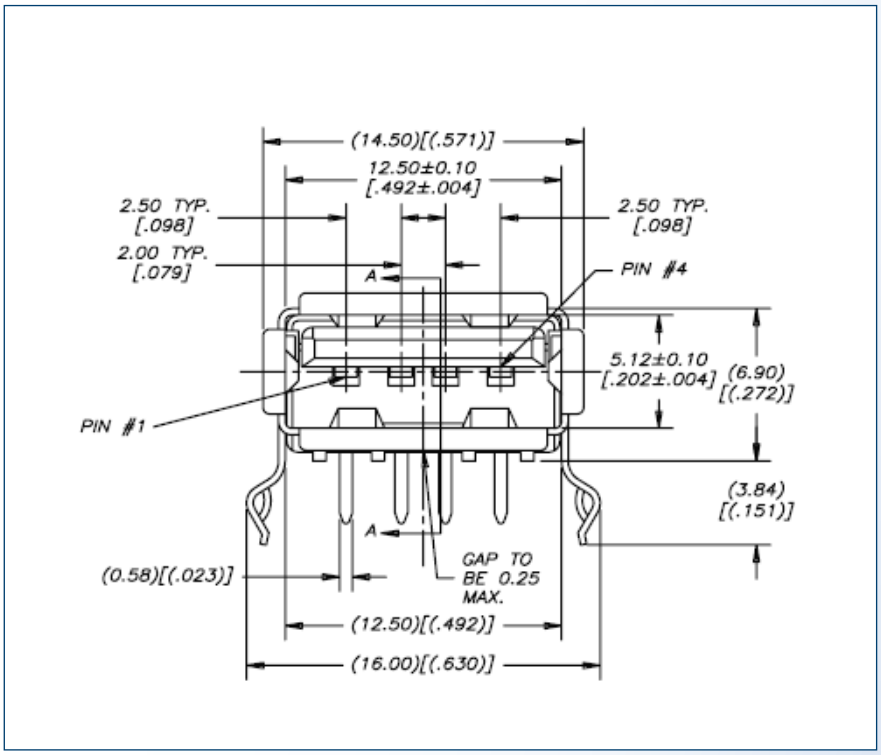

Part Numbers:

USB Receptacle		
	Type	Style
UE27-AC54-100	A	Right angled PCB
UE27-AE54-100	A	Straight PCB (vertical)
UE27-AM54-100	A	Right angled SMT
UE27-AS54-100	A	strack Right Angled PCB
UE27-BC54-100	B	Right angled PCB
UE27-BE54-100	B	Straight PCB (vertical)
USB plugs		
	Type	
UE28-AM54-130	A	
UE28-BM54-130	B	

FIREWIRE

Specifications:

Conductor Resistance: 0.3 ohms max. at 1 amp. DC

Materials:

Housing: Plastic, High Temperature glas reinforced nylon. UL94V-0
Shell: Copper alloy, bright tin/lead plated
Contacts: Brass alloy, .010[0.25] thick
Plating contacts: 30 microinches [0.76 microns] min gold over 50 microinches [1.27 microns] Nickel underplate on contact surfaces Tin-lead on the contact tails.

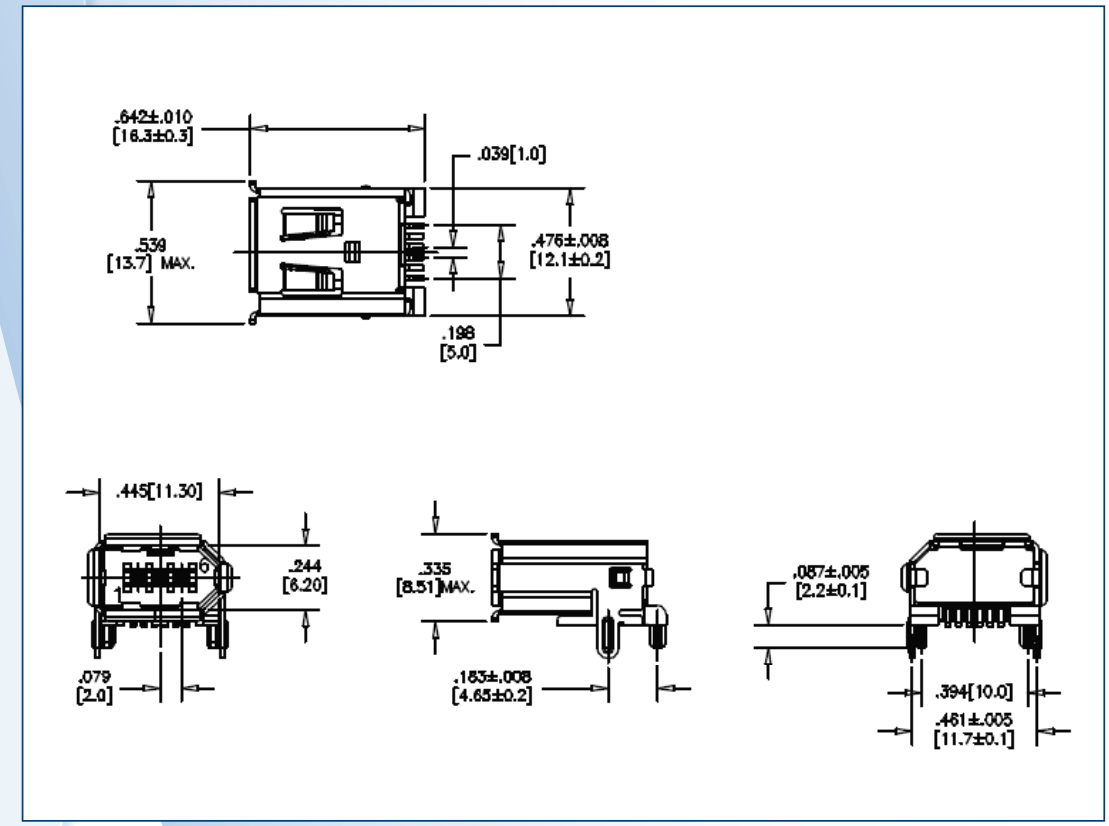

Part Numbers:

IEEE 1394 Firewire			
Firewire Receptacle		Style	Position
UE33-AC1-110		SMT	Right angled flat
UE33-AA1-110		Through hole	Right angled upright
UE33-AG1-11A		Through hole	Right angled flat
Firewire Plug	Type		
UE32-AN0-000	A		
UE32-BN0-000	B		

HIGH SPEED CONNECTORS

INFINITY

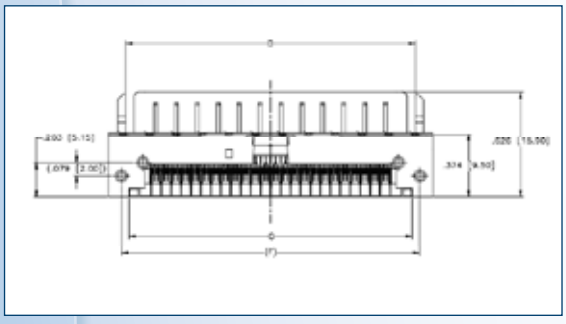

Mechanical Characteristics

Insertion force: 55.5 N maximum (for 4X version)
Withdrawal force: 6.1 N typical (for 4X version)
Durability: 250 mating cycles
Coplanarity: 0.1mm

Electrical Characteristics

Impedance: 90 – 100^
Rise time for impedance measurement: 70 ps
Within pair skew: 5 ps
Return Loss: Meets SFF8470 spec
LLCR: 80 m^ max
Insulation Resistance: 10 G^ at 100 VDC
DWV: 100 VRMS for 60 seconds

Materials

Contacts:
- Base material – Copper alloy Plating
- Mating area – refer to p/n table
- Solder tails – refer to p/n table

Shell:
- Base material – Zinc alloy #3
- Plating – 100µ" Nickel plated

Housings: Black color, glass-reinforced,
lead-free solder reflow process compatible
thermoplastic, UL94V-0 rated
Temperature rise: Meets the requirement of 30°C ΔT
Operating temperature -40° to +85°C
Storage temperature -40° to +85°C

Part Numbers :

Part number	Description
U65B044010	Infinity 4X connector
U65B044010T	Infinity 4X connector
U65B044020T	Receptacle
U65B044060	Infinity 4X connector
U65B044060T	Receptacle
U65B045120T	Infinity 4X connector
U65B124210	Receptacle
U65B1242E0T	Receptacle
U65E044120T	Infinity 4X connector
U65E044210T	Infinity 4X connector
U65E044220	Receptacle
U65E044460T	Receptacle
U65E045120T	Receptacle
U65E124120	Receptacle
U65E124464T	Receptacle
U65F044360T	Belly to Belly
UE66C042130	Plug
UE66L042120	Plug
UE66L042130	Plug
UE66N042120	Infinity 4X Plug Lanyard style
UE66N042130	Plug

For detailed specifications check www.amphenolinfocom.eu

SFP

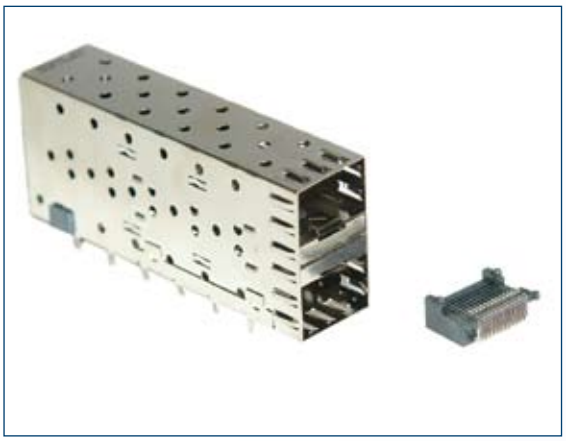

Materials

Cage: Copper alloy, nickel plated.

Selected versions available with matte tin over nickel.

- Enhanced EMI versions incorporate stainless steel ground tabs

Connectors:

- Contacts: Copper alloyplating - refer to p/n table
- Housing: Glass reinforced lead-free process solder reflow compatible UL94V-O

Temperature Rating

- Operating Temperature = -55°C to +85°C
- Storage Temperature = -55°C to +105°C

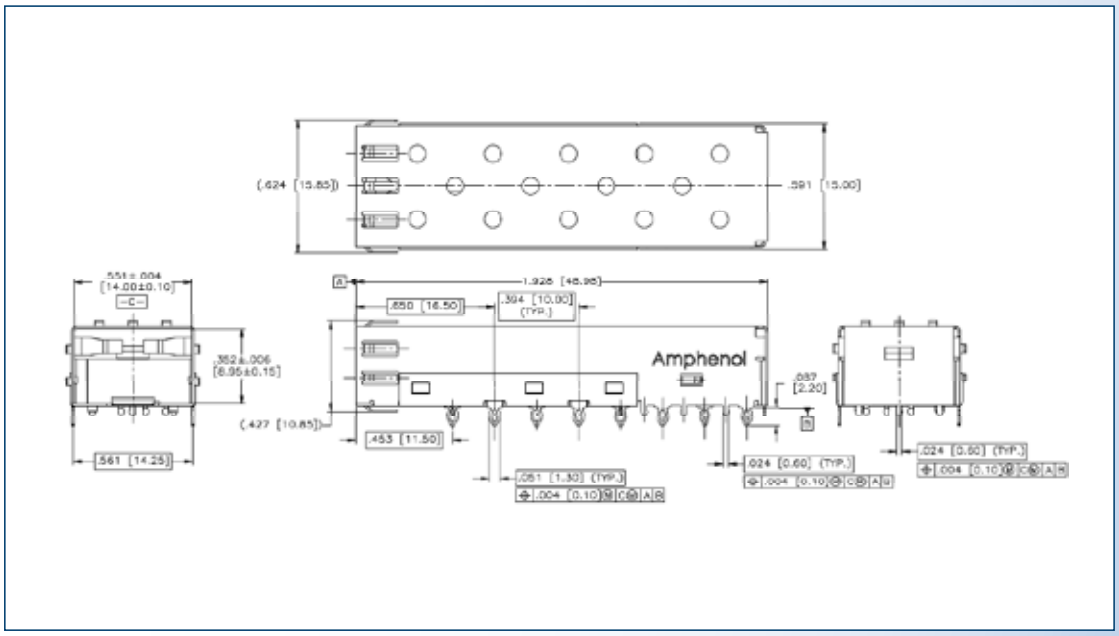

Part Numbers :

Part number	Description
U77A1118200T	Single port SFP cage
U77A16182001	1x1 SFP+ cage
U77A21142001	1x2 SFP cage
U77A26142001	1x2 SFP+ cage
U77A41142001	1x4 SFP cage
U77A46142001	1x4 SFP+ cage
U77A61142001	1X6 SFP cage
U77A66142001	1x6 SFP+ cage
U77C11182011	1x1 SFP cage with Light Pipes
U77C21102011	1x2 SFP cage with Light Pipes
U77C41102011	1x4 SFP cage with Light Pipes
U77C61102011	1x6 SFP cage with Light Pipes
U77F16182001	1x1 SFP+ 1 deg Cage
U78B112600121	2X1 SFP cage and connector combo
U78B412600121	2X4 SFP cage and connector combo
UE75A203000T	SFP SMT Connector, 30 u” Gold, Matte Tin tails

SAS & SATA

SAS

Specifications:

Current Rating: 1.5 A
Contact Resistance: 30 mohm max at 100mA DC
Temperature range: 0 to +55C

Materials:

Housing: Thermoplastic 45% glass fiber UL94V-0
Contacts: Phosphor bronze or Brass
Plating: mating: Selective 15u inches gold.
Thermination:100 u inches Min Tin. 3. Under-Plate:
50u inches Min of nickel

Part Numbers:

Part number	Plating	Type	DIP/ SMT	Peg distance	PCB Thinkness
G38A11214AEU	15u"	R/A	DIP	46.00mm	1.57mm
G38A12214AEU	30u"				
G38A11314AEU	15u"				3.18mm
G38A12314AEU	30u"				
G38A71214AEU	15u"			49.81mm	1.57mm
G38A72214AEU	30u"				
G38A71314AEU	15u"				3.18mm
G38A72314AEU	30u"				
G38A21114AEU	15u"	Vertical	SMT	46.00mm	1.57mm
G38A22114AEU	30u"				
G38A21614AEU	15u"				3.18mm
G38A22614AEU	30u"				
G38A21414AEU	15u"		Press fit	46.00mm	1.57mm
G38A22414AEU	30u"				
G38A21514AEU	15u"				3.18mm
G38A22514AEU	30u"				
G38A21214AEU	15u"		DIP	46.00mm	1.57mm
G38A22214AEU	30u"				
G38A21714AEU	15u"				2.67mm
G38A22714AEU	30u"				

AMTA P/N	Plating	Type	DIP/ SMT	Peg distance	PCB Thinkness
G41A11214AEU	15u"	R/A	DIP	32.03mm	1.57mm
G41A12214AEU	30u"				
G41A11314AEU	15u"				3.18mm
G41A12314AEU	30u"				
G41A21114AEU	15u"	Vertical	SMT	28.22mm	1.57mm
G41A22114AEU	30u"				
G41A21614AEU	15u"				3.18mm
G41A22614AEU	30u"				
G41A21414AEU	15u"		Press fit	28.22mm	1.57mm
G41A22414AEU	30u"				
G41A21514AEU	15u"				3.18mm
G41A22514AEU	30u"				
G41A21214AEU	15u"		DIP	28.22mm	1.57mm
G41A22214AEU	30u"				
G41A21714AEU	15u"				2.67mm
G41A22714AEU	30u"				

MINI SAS

Specifications:

Connector Mechanical Characteristics
26 position 0.8mm pitch SMT receptacle
Coplanarity spec 0.1mm
Insertion force: 55.5 N maximum
Withdrawal force: 49.0 N maximum
Durability: 250 mating cycles

Cage Mechanical Characteristics

Single and 1x2 cages available
Standard (1° angle) and 0° versions
Multiple keying according to SFF8088
Includes EMC gasket and appropriate M2 mounting screws

Connector Electrical Characteristics

Maximum current: 0.5A per contact
Maximum voltage: 30V per contact
LLCR: 80 m^ max
Insulation Resistance: 1000 M^ at 100V DC for 60 seconds
DWV: 300 V minimum DC for 60 seconds

Materials

Connector
• Contacts
• Base material – copper alloy
• Plating - refer to p/n table for options
• Housings: Black color, glass-reinforced, lead-free solder reflow process compatible thermoplastic, UL94V-0 rated

Cage

• Base material – zinc alloy #3
• Plating – 100µ" nickel plated

Gasket

• Conductive elastomeric foam or metal spring fingers
Operating temperature -55° to +85°C
Storage temperature -55° to +85°C

Part Numbers :

Part number	Description
FS1R262000	Mini SAS external receptacle connector
FS1S0114E1	Mini SAS single port cage
FS1S0214E1	Mini SAS dual port cage
FS1SF114E1	Mini SAS single port cage, 1 deg
FS1SF214E1	Mini SAS dual port cage, 1 deg
FS1SF414E1	Mini SAS four port cage, 1 deg

SATA

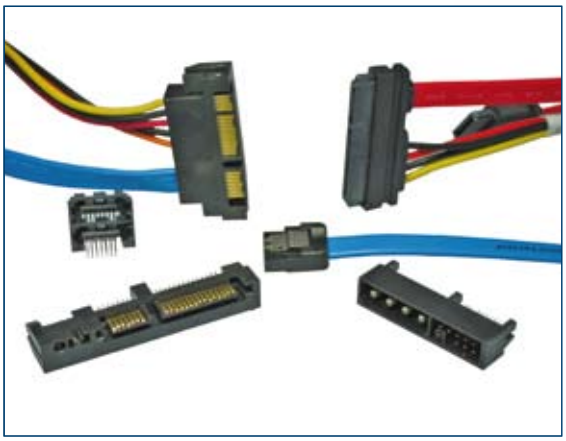

Specifications:

Contact Resistance: 30 mohm Max, 15 mohm Max change from initial

Insulator Resistance: 1000 mohm Min

Dielectric Withstanding Voltage: 500V AC for 1 minute

Materials:

Housing: Thermoplastic glass-fiber UL94V-0

Contact: Brass or Phosphor Bronze 1.Selective gold plating 2. Solder area-100u"Min of matte tin over 50u" Min of nickel plating

Board lock: Phosphor Bronze,100u"Min Tin over 50u" Min of nickel

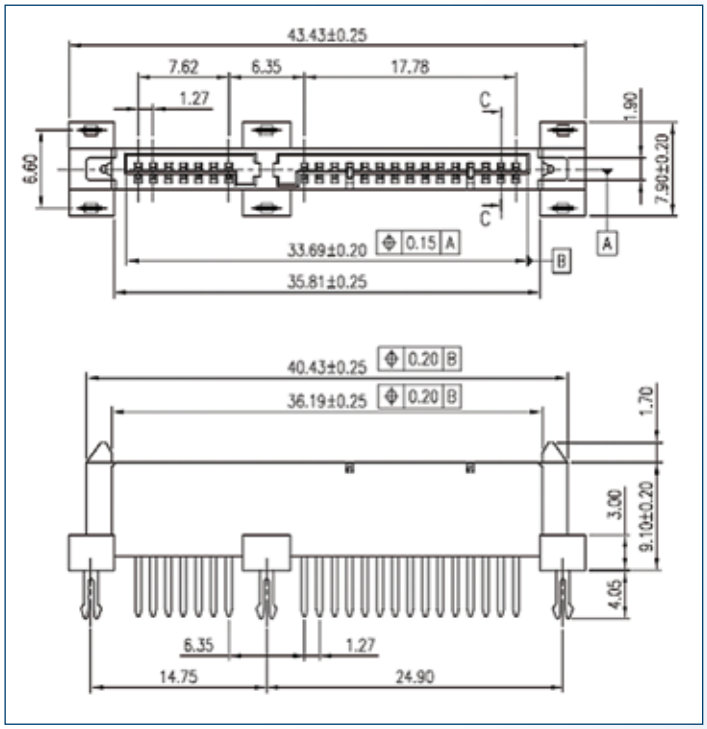

Part Numbers:

P/N		Description
G16A2121MEU	SERIAL ATA CONN,	7P,STR,TAIL=3.5,MATT PIN
G16A9111WLF	SATA CONN.,	7POS STACKED, MALE, 15U", R/A SMT TYPE
G16CE5121WLF	SATA CONN.,	22P RECEP.R/A, DIP TYPE, 15U", LCP
G16CE5021WEU	SATA RECEPTACLE	R/AMOUNT, SINGAL & POWER G/F
G16CE7021WEU	SATA RECEPTACLE REVERSE,	SINGLE & POWER G/F
G16AD0216WEU	SATA CONN.SIGNAL	7P MALE, W/LARCH, G/F, RED
G16AD021WEU	SATA CONN.SIGNAL.	7-POS, MALE,STRAIGHT,G/F,BLACK
G16CE21210W1EU	SATA CONN.	15U",STR PLUG, DIP TYPE,ARROWHEAD BOARD
G16CE41210W1EU	SATA CONN	STR.BOARDMOUNT, RECEP,15U",DIP TYPE
G16CE22110WEU	SATA CONN.	POWER+SIGNAL, 7+15P,30U",STR. SMT,MALE
G16CE1111WEU	ATA CONN.	15U",R/A SMT, P & S,PLUG 7+15P

EXTERNAL SATA

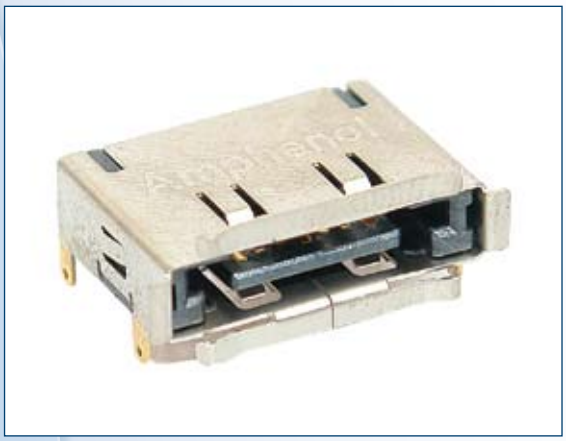

Specifications:

Contact Resistance: 30 mohm Max, 15 mohm Max change from initial

Insulator Resistance: 1000 mohm Min

Dielectric Withstanding Voltage: 500V AC for 1 minute

Materials:

Housing: Thermoplastic 30% glass-fiber UL94V-0

Contact:Copper alloy

Shell: Copper alloy

Plating:

Contact:1.Selective gold plating. 2.Solder area-matte tin plating 3.Under plating -Nickel

Shell:a)Tin plated with Nickel under plating.

b)Full Nickel plating. Soldering area-gold flash or Tin plated.

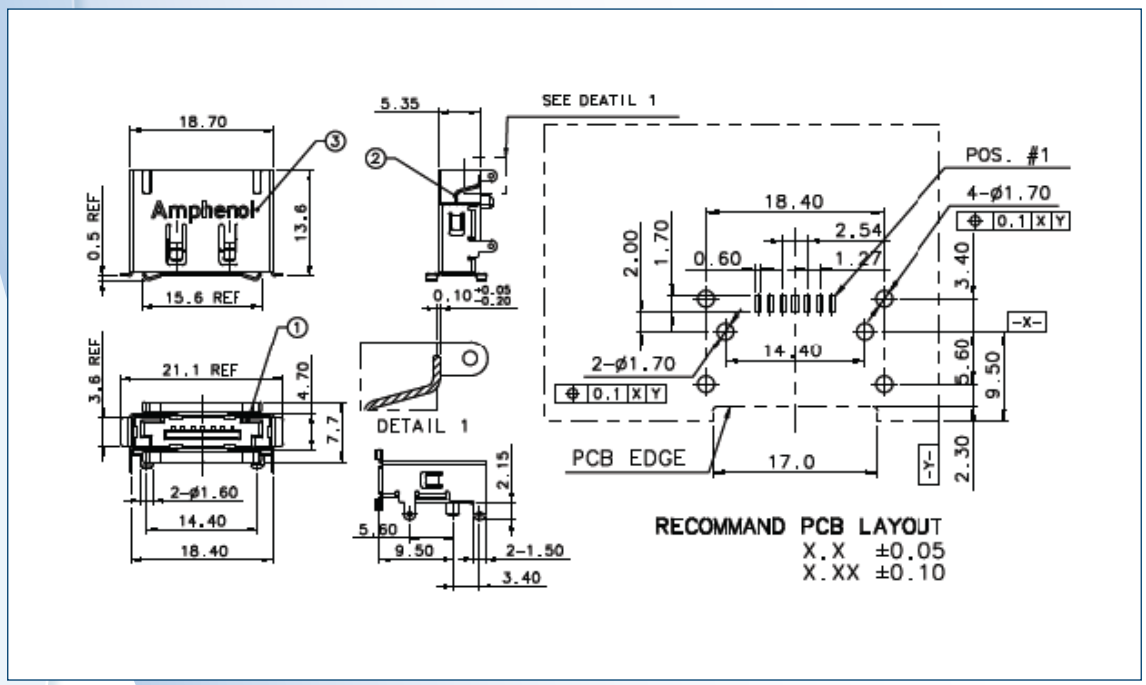

Part Numbers:

Part number	Plug / connector	Description
G091322301AWEU	CONNECTOR	7-PIN,STRAIGHT DIP, 30U"
G091231301LF	PLUG	BOARD MOUNT REVERSE, SMT W/LOGO TRAY
G091131301LF	PLUG	BOARD MOUNT NORMAL, W/LOGO SMT TYPE TRAY
G092552331WEU	CONNECTOR	STACKED, MALE, R/A PCB MOUNT
G092532332WEU	CONNECTOR	STACKED, MALE,R/A DIP,30U",TUBE
G091131300LF	CONNECTOR	PLUG,R/A SMT, NORMAL, TAPE & REEL

HDMI

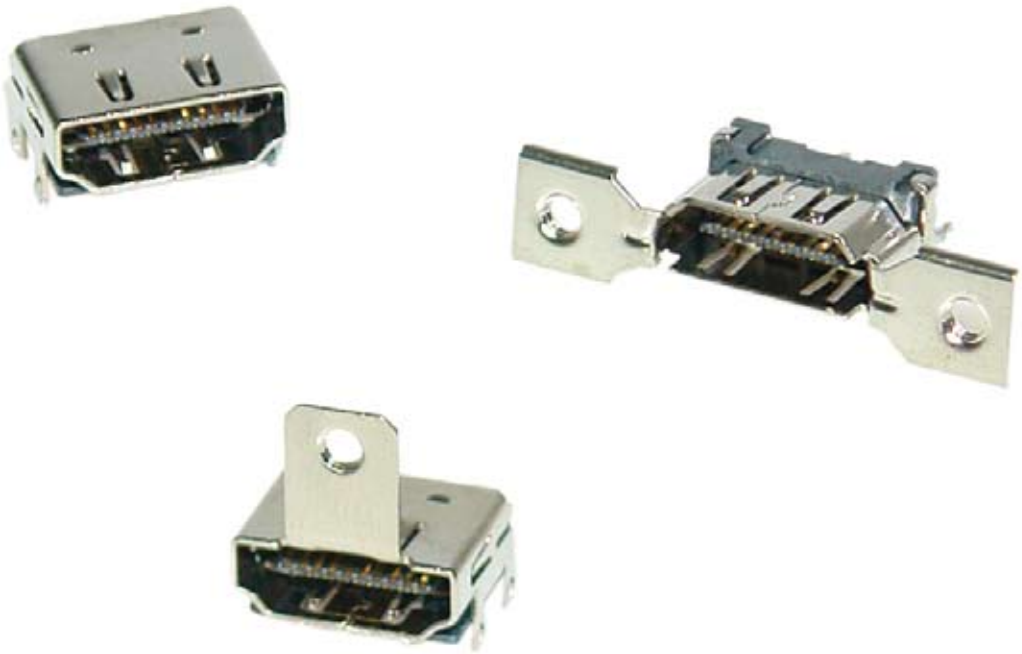

HDMI

Specifications:

- Contact Resistance: 30 mohm
- Insulator resistance: 100Mohm Max
- Dielectric Withstanding Voltage: 500V AC

Materials:

- Housing: High temperature plastic UL94V-0, BL
- Contact: Brass, Thickness=0,20mm
- Shield: Phosphor Bronze, Thickness=0,5mm

Part Numbers:

No.	Description	Product Description	Termination Style
HDM-F191-001-12	HDMI R/A Receptacle (without Flange)	Contacts 0,76um gold, Shell nickel plated	SMT, SHELL DIP
HDM-F191-001-22	HDMI R/A Receptacle (without Flange)	Contacts 0,38um gold, Shell nickel plated	SMT, SHELL DIP
HDM-F191-003-12	HDMI R/A Receptacle (with Flange)	contacts 0,76um gold, Shell nickel plated	SMT, SHELL DIP
HDM-F191-003-22	HDMI R/A Receptacle (with Flange)	Contacts 0,38um gold, Shell nickel plated	SMT, SHELL DIP
HDM-F191-015-12	HDMI R/A Receptacle (with Flange)	contacts 0,76um gold, Shell nickel plated	SMT, SHELL DIP
HDM-F191-015-22	HDMI R/A Receptacle (with Flange)	Contacts 0,38um gold, Shell nickel plated	SMT, SHELL DIP
HDM-F191-016-12	HDMI R/A Receptacle (with Flange)	contacts 0,76um gold, Shell nickel plated	SMT, SHELL DIP
HDM-F191-016-22	HDMI R/A Receptacle (with Flange)	Contacts 0,38um gold, Shell nickel plated	SMT, SHELL DIP
HDM-F191-017-12	HDMI R/A Receptacle (with Flange)	Contacts 0,76um gold, Shell nickel plated	SMT, SHELL DIP
HDM-F191-017-22	HDMI R/A Receptacle (with Flange)	Contacts 0,38um gold, Shell nickel plated	SMT, SHELL DIP
HDM-F191-018-12	HDMI R/A Receptacle (with Flange)	contacts 0,76um gold, Shell nickel plated	SMT, SHELL DIP
HDM-F191-018-22	HDMI R/A Receptacle (with Flange)	Contacts 0,38um gold, Shell nickel plated	SMT, SHELL DIP
HDM-F192-008-12	HDMI R/A Receptacle (with Flange)	Contacts 0,76um gold, Shell nickel plated	T/H(4 Rows, Short Shell Tail), Shell Dip
HDM-F192-008-22	HDMI R/A Receptacle (with Flange)	Contacts 0,38um gold, Shell nickel plated	T/H(4 Rows, Short Shell Tail), Shell Dip
HDM-F192-009-12	HDMI T/H Receptacle (with Flange)	Contacts 0,76um gold, Shell nickel plated	T/H(4 Rows, Long Shell Tail), Shell Dip
HDM-F192-009-22	HDMI T/H Receptacle (with Flange)	Contacts 0,38um gold, Shell nickel plated	T/H(4 Rows, Long Shell Tail), Shell Dip

MINI RIBBON MD5

IDC CONNECTORS

Materials:

- Housing: thermoplastic UL94V0
- Contact: phosphor bronze selective gold plated
- Shell: Die-cast zinc nicked plated over copper
- (For pos 20 & 100 : steel nickel plated over copper)

Electrical:

- Current Rating: 1 Amp
- Insulation Resistance: >500MΩ
- Withstanding Voltage: AC 500V/rms for 1 minute
- Contact Resistance: 35mΩ maxi
- Temperature Range: -55°C +105°C

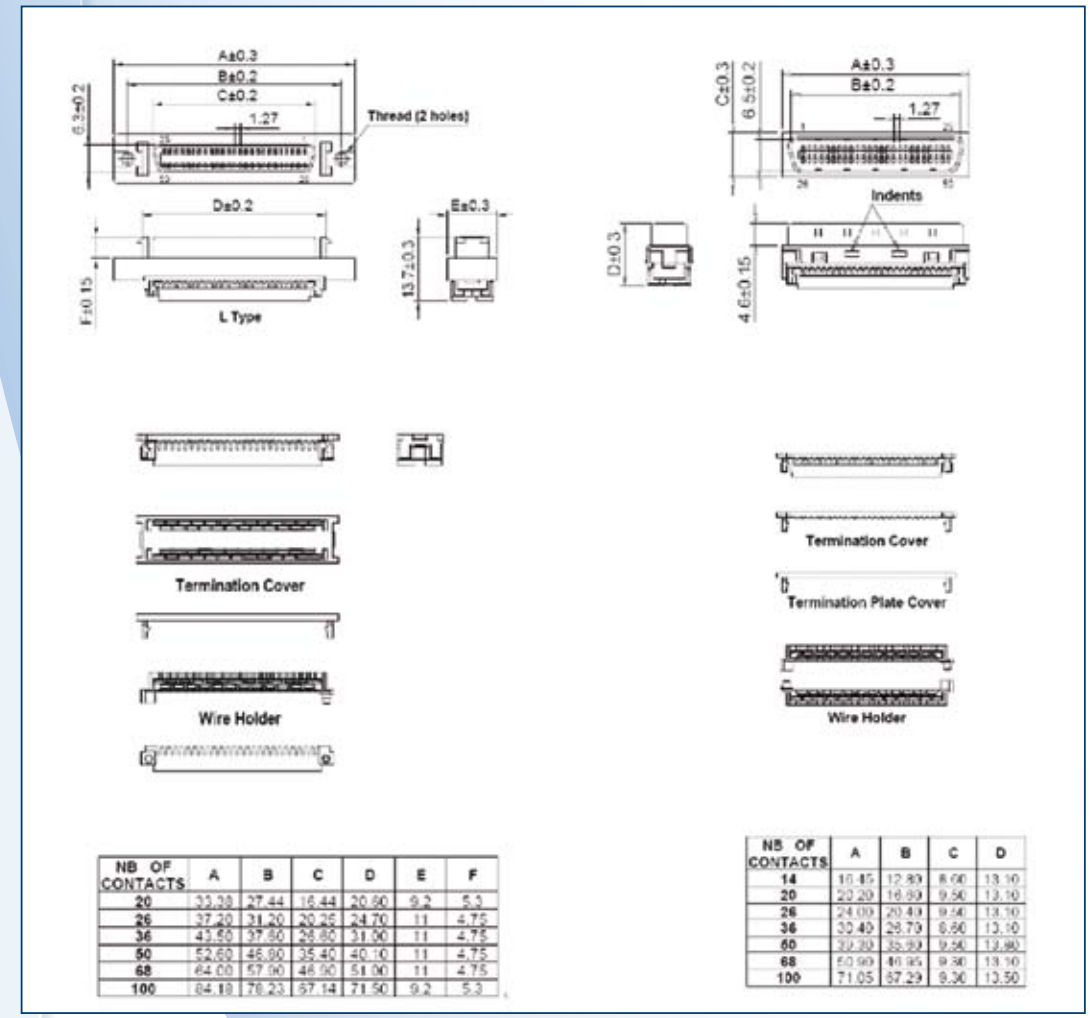

NB OF CONTACTS	A	B	C	D	E	F
20	33.38	27.44	16.44	20.60	9.2	5.3
26	37.20	31.20	20.26	24.70	11	4.75
36	43.60	37.60	26.60	31.00	11	4.75
50	52.60	46.60	35.40	40.10	11	4.75
68	64.00	57.90	46.90	51.00	11	4.75
100	84.18	78.23	67.14	71.50	9.2	5.3

NB OF CONTACTS	A	B	C	D
14	16.45	12.80	8.60	13.10
20	20.20	16.80	9.50	13.10
26	24.00	20.40	9.50	13.10
36	30.40	26.70	8.60	13.10
50	39.20	35.80	9.50	12.80
68	50.90	46.95	9.30	13.10
100	71.05	67.29	9.30	13.50

Part Numbers:

Female		Male	
MD5ID20F0L37	RECEPTACLE MD5, 20 WAY IDC	MD5ID20M0A7	PLUG MD5, 20 WAY IDC
MD5ID26F0L37	RECEPTACLE MD5, 26 WAY IDC	MD5ID26M0A7	PLUG MD5, 26 WAY IDC
MD5ID36F0L37	RECEPTACLE MD5, 36 WAY IDC	MD5ID36M0A7	PLUG MD5, 36 WAY IDC
MD5ID50F0L37	RECEPTACLE MD5, 50 WAY IDC	MD5ID50M0A7	PLUG MD5, 50 WAY IDC
MD5ID68F0L37	RECEPTACLE MD5, 68 WAY IDC	MD5ID68M0A7	PLUG MD5, 68 WAY IDC

SOLDER CONNECTORS

Materials:

- Housing: Thermoplastic UL94V-0
- Contacts: Phosphor bronze selective gold plated
- Shell: Die-Cast zinc nickel plated over copper
- (For pos 14 & 20 : Steel nickel plated over copper)

Electrical:

- Current Rating: 1 Amp
- Insulation Resistance: >500MΩ
- Withstanding Voltage: AC 500V/rms for 1 minute
- Contact Resistance: 35m Ω maxi
- Temperature Range: -55°C +105°C

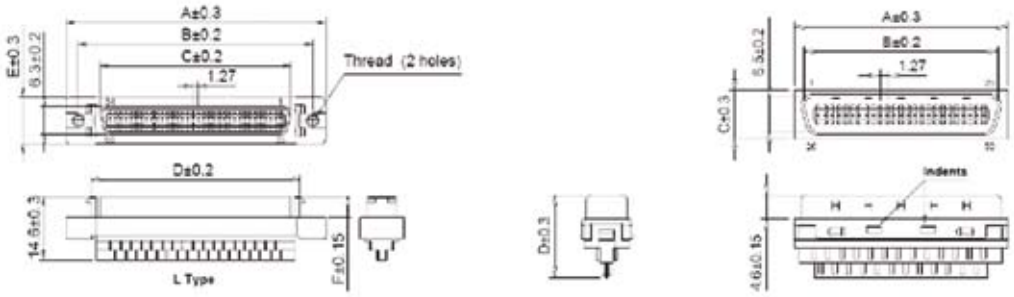

NB OF CONTACTS	A	B	C	D	E	F
14	29.80	23.64	12.63	17.08	9.20	5.30
20	33.40	27.44	15.44	20.60	9.20	5.30
26	37.20	31.20	20.25	24.70	10.90	4.75
36	43.50	37.60	29.60	31.00	10.90	4.75
50	52.00	46.80	35.40	40.12	10.90	4.75
68	64.00	57.90	46.90	51.00	10.90	4.75

NB OF CONTACTS	A	B	C	D
14	18.45	12.80	8.60	15.20
20	20.00	16.80	9.60	15.20
26	24.00	20.40	9.60	15.50
36	30.50	26.70	8.60	15.20
50	39.30	35.80	9.60	15.50
68	50.00	40.95	9.39	15.50
100	71.00	67.29	9.39	15.50

Part Numbers:

Female		Male	
MD5SC20F0L3	RECEPTACLE MD5, 20 WAY SOLDER	MD5SC20M0A	PLUG MD5, 20 WAY SOLDER
MD5SC26F0L3	RECEPTACLE MD5, 26 WAY SOLDER	MD5SC26M0A	PLUG MD5, 26 WAY SOLDER
MD5SC36F0L3	RECEPTACLE MD5, 36 WAY SOLDER	MD5SC36M0A	PLUG MD5, 36 WAY SOLDER
MD5SC50F0L3	RECEPTACLE MD5, 50 WAY SOLDER	MD5SC50M0A	PLUG MD5, 50 WAY SOLDER
MD5SC68F0L3	RECEPTACLE MD5, 68 WAY SOLDER	MD5SC68M0A	PLUG MD5, 68 WAY SOLDER

PCB CONNECTORS

Electrical:

- Current Rating: 1 Amp
- Insulation Resistance: >500MΩ
- Withstanding Voltage: AC 500V/rms for 1 Minute
- Contact Resistance: 35mΩ maxi
- Temperature Range: -55°C +105°C

Materials:

- Housing : Thermoplastic UL94V-0
- Contacts: Phosphor bronze selective gold plated
- Shell: Steel nickel plated over copper
- Boardlocks: Brass tin plated over copper

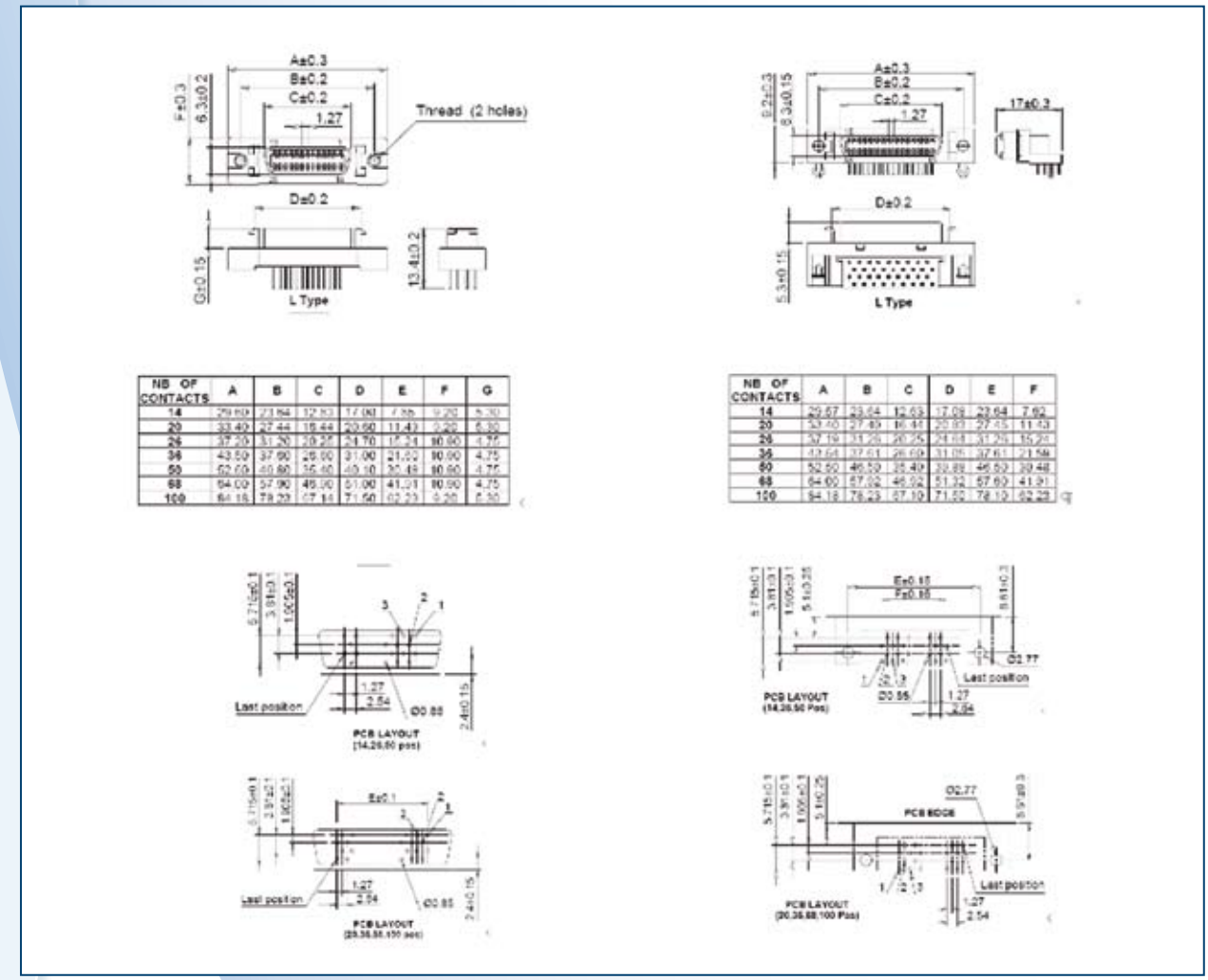

Part Numbers:

Straight PCB		Right angle PCB	
MD5SP20F0L3	RECEPTACLE MD5, 20 WAY PCB STR	MD5RP20F0L3	RECEPTACLE MD5, 20 WAY PCB R/A
MD5SP26F0L3	RECEPTACLE MD5, 26 WAY PCB STR	MD5RP26F0L3	RECEPTACLE MD5, 26 WAY PCB R/A
MD5SP36F0L3	RECEPTACLE MD5, 36 WAY PCB STR	MD5RP36F0L3	RECEPTACLE MD5, 36 WAY PCB R/A
MD5SP50F0L3	RECEPTACLE MD5, 50 WAY PCB STR	MD5RP50F0L3	RECEPTACLE MD5, 50 WAY PCB R/A
MD5SP68F0L3	RECEPTACLE MD5, 68 WAY PCB STR	MD5RP68F0L3	RECEPTACLE MD5, 68 WAY PCB R/A

HOODS

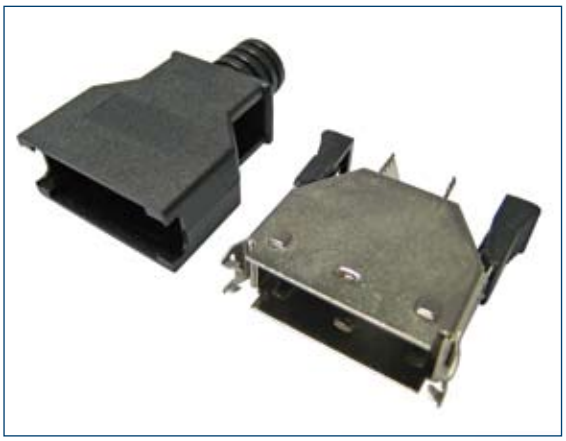

Materials:

Housing: thermoplastic UL94V0

Contact: phosphor bronze selective gold plated

Straight connector

Shell: Die-cast zinc nicked plated over copper

(For pos 14 - 20 - 100 : steel nickel plated over copper)

R/A connector

Shell: Steel nickel plated over copper

Boardlocks: Brass tin plated over copper

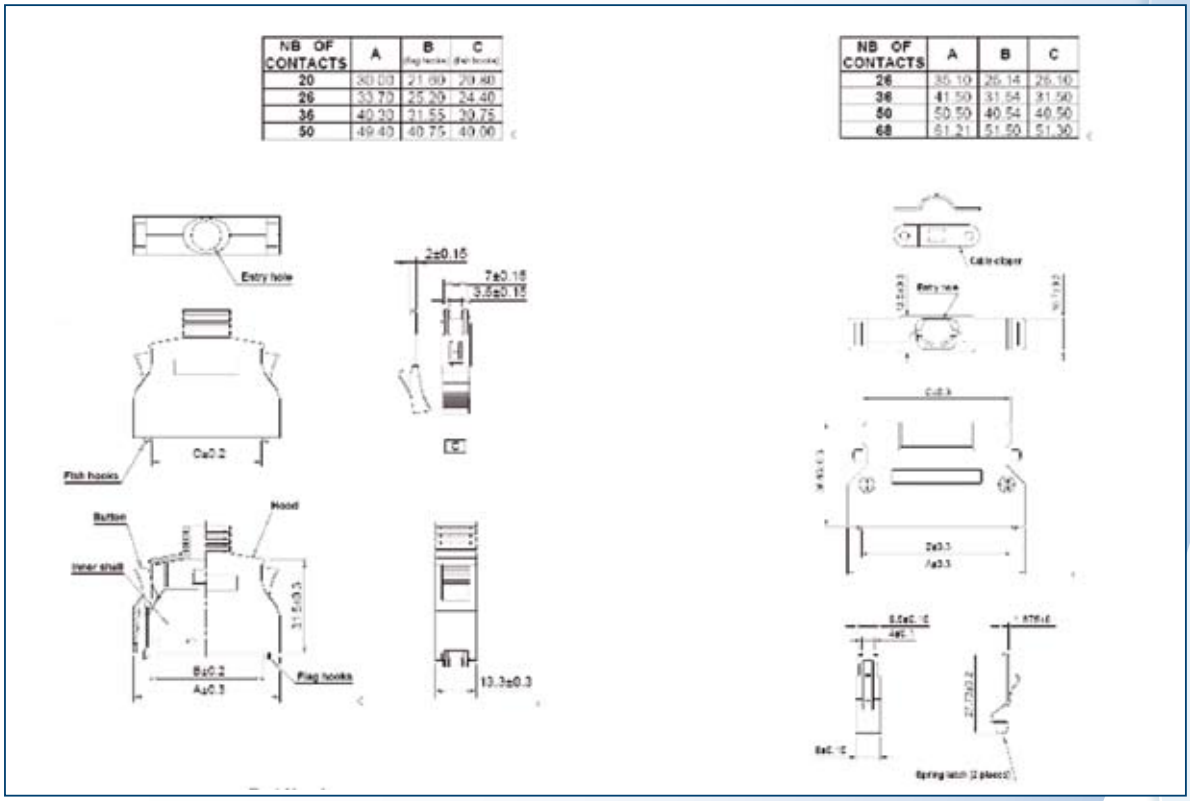

Part Numbers:

Plastic		Metal	
MD5PL20S60CBK	HOOD, MD5 20 WAY PLASTIC	MD5ML26S75	HOOD, MD5 20 WAY METAL
MD5PL20S65CBK	HOOD, MD5 20 WAY PLASTIC	MD5ML26S90	HOOD, MD5 26 WAY METAL
MD5PL20S70CBK	HOOD, MD5 20 WAY PLASTIC	MD5ML36S75	HOOD, MD5 36 WAY METAL
MD5PL20S75CBK	HOOD, MD5 20 WAY PLASTIC	MD5ML36S90	HOOD, MD5 36 WAY METAL
MD5PL26S70CBK	HOOD, MD5 26 WAY PLASTIC	MD5ML50S10	HOOD, MD5 50 WAY METAL
MD5PL26S80CBK	HOOD, MD5 26 WAY PLASTIC	MD5ML50S12	HOOD, MD5 50 WAY METAL
MD5PL26S85CBK	HOOD, MD5 26 WAY PLASTIC	MD5ML68S11	HOOD, MD5 68 WAY METAL
MD5PL36S70CBK	HOOD, MD5 36 WAY PLASTIC	MD5ML68S14	HOOD, MD5 68 WAY METAL
MD5PL36S80CBK	HOOD, MD5 36 WAY PLASTIC		
MD5PL36S85CBK	HOOD, MD5 36 WAY PLASTIC		
MD5PL36S90CBK	HOOD, MD5 36 WAY PLASTIC		
MD5PL50S90CBK	HOOD, MD5 50 WAY PLASTIC		
MD5PL50S10CBK	HOOD, MD5 50 WAY PLASTIC		

MICRO RIBBON

RACK AND PANEL CONNECTORS

Specifications:

Current Rating: 5 Amps
Insulation Resistance: > 5000 Mohm
Dielectric Withstanding Voltage: 1200V AC (RMS) at sea level
Voltage Rating: 700 VDC at sea level
200 VDC at 70,000 ft.

Materials:

Shell: Zinc plated steel with clear chromate coating, with nickel & pure tin plate optional
Contact material: Copper alloy
Contact plating: Selective gold plated over nickel underplate
Contact spacing: 0.085” pitch
Insulation Material: PBT & glass fiber reinforced, UL94V-O

Dimensions:

Contact	A min.	B min.	C. min.	Bottom Mounting H Min.	Bottom Mounting J min.	Top Mounting K Min.	Top Mounting L min.
14	35.99	44.45	23.11	27.92	29.29	23.90	25.27
24	46.79	55.25	33.91	38.71	40.08	34.70	36.07
36	59.74	68.20	46.86	51.66	53.04	47.65	49.02
50	74.85	83.31	61.98	66.78	68.15	62.76	64.14
64	89.97	98.43	77.09	81.89	83.26	77.88	79.25

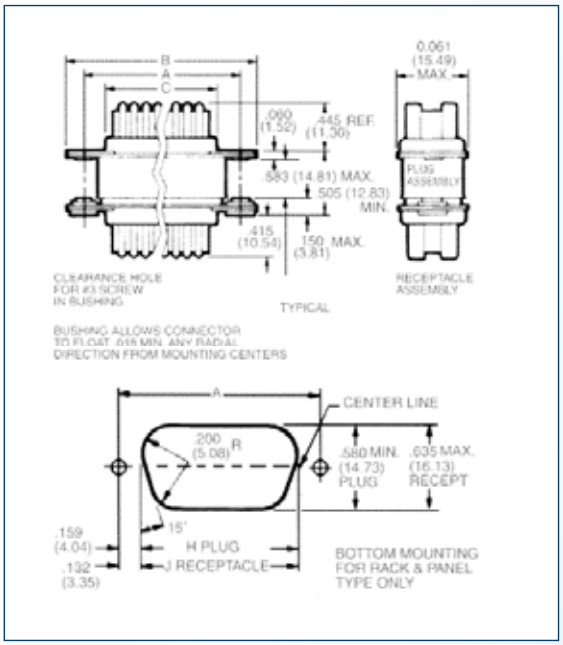

Part Numbers:

Contacts	Plug	Receptacle : Float Mounted
14	157-12140	157-22140
24	157-12240	157-22240
36	157-12360	157-22360
64	157-12640	157-22640

CABLE TO CABLE (TOP ENTRY)

Specifications:

Current Rating: 5 Amps
Insulation Resistance: > 5000 Mohm
Dielectric Withstanding Voltage: 1200V AC (RMS) at sea level
Voltage Rating: 700 VDC at sea level
200 VDC at 70,000 ft.

Materials:

Shell: Zinc plated steel with clear chromate coating, with nickel & pure tin plate optional
Contact material: Copper alloy
Contact plating: Selective gold plated over nickel underplate
Contact spacing: 0.085” pitch
Insulation Material: PBT & glass fiber reinforced, UL94V-O

Dimensions:

Dimensions					
Contacts	B Max mm	D Max mm	F Max mm	G Max mm	H Max mm
14	44.96	21.59	8.84	8.84	29.29
24	55.75	21.08	12.01	12.01	40.08
36	68.70	23.11	16.46	12.70	53.06
50	83.82	25.40	19.61	12.70	68.15

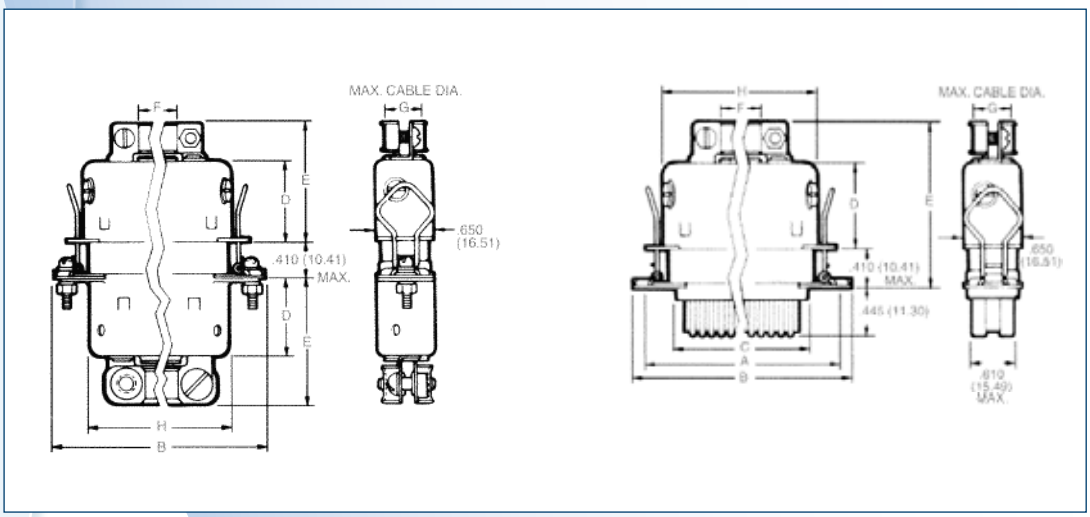

Part Numbers:

		Cable to Cable	Cable to Panel
Contacts	Plug Top Cable Entry	Receptacle with Spring Latch	Receptacle with Spring Latch
14	157-32140	157-62140	157-42140
24	157-32240	157-62240	157-42240
36	157-32360	157-62360	157-42360
50	157-32500	157-62500	157-42500

HEADER AND SOCKETS

IDC SOCKET

Specifications:

Contact Resistance: 20 mohm Max at 1 AMP DC
Insulation Resistance: 5000 magohms at 500 VDC
Operation Temperature -40°C to +105°C
Dielectric Withstanding Voltage: 500 VAC/rms 60 Hz for 1 Minute
Current Rating: 3A

Materials:

Insulator: Glass-Filled Thermoplastic PBT, UL94V-0 rates
Contact: Brass or Phosphor Bronze Plated full gold or selected gold in mating area, 100µ" min. tin plated on termination area, with entire contact under-plated 50µ" min. Nickel

Part Numbers:

P/N	Number of positions	Housing color
T812016A101CEU	16	Grey
T812020A101CEU	20	
T812026A101CEU	26	
T812110A101CEU	10	Black
T812114A101CEU	14	
T812116A101CEU	16	
T812120A101CEU	20	
T812126A101CEU	26	
T812134A101CEU	34	
T812140A101CEU	40	
T812150A101CEU	50	

LATCH HEADER

Specifications:

- Contact Resistance: 20 mohm Max
- Insulation Resistance: 1000 Mohms Min
- Current Rating: 3AMP
- Withstand Voltage: 1000V AC/minute
- Operation Temperature: -40 degree up+105 degree

Materials:

- Insulator: High Temperature Thermoplastic, UL94V-0 rated
- Contact: Brass
- Plating: Au or Sn Over 50µ" Ni

For detailed specifications check www.amphenolinfocom.eu

Part Numbers:

P/N	Housing color	Number of positions	Varation Code
T816016A1S101CEU	Grey	16	Short Latch
T816110A1S102CEU	Black	10	Long Latch
T816114A1S102CEU		14	
T816116A1S102CEU		16	
T816120A1S102CEU		20	
T816126A1S102CEU		26	
T816134A1S102CEU		34	

BOX HEADER

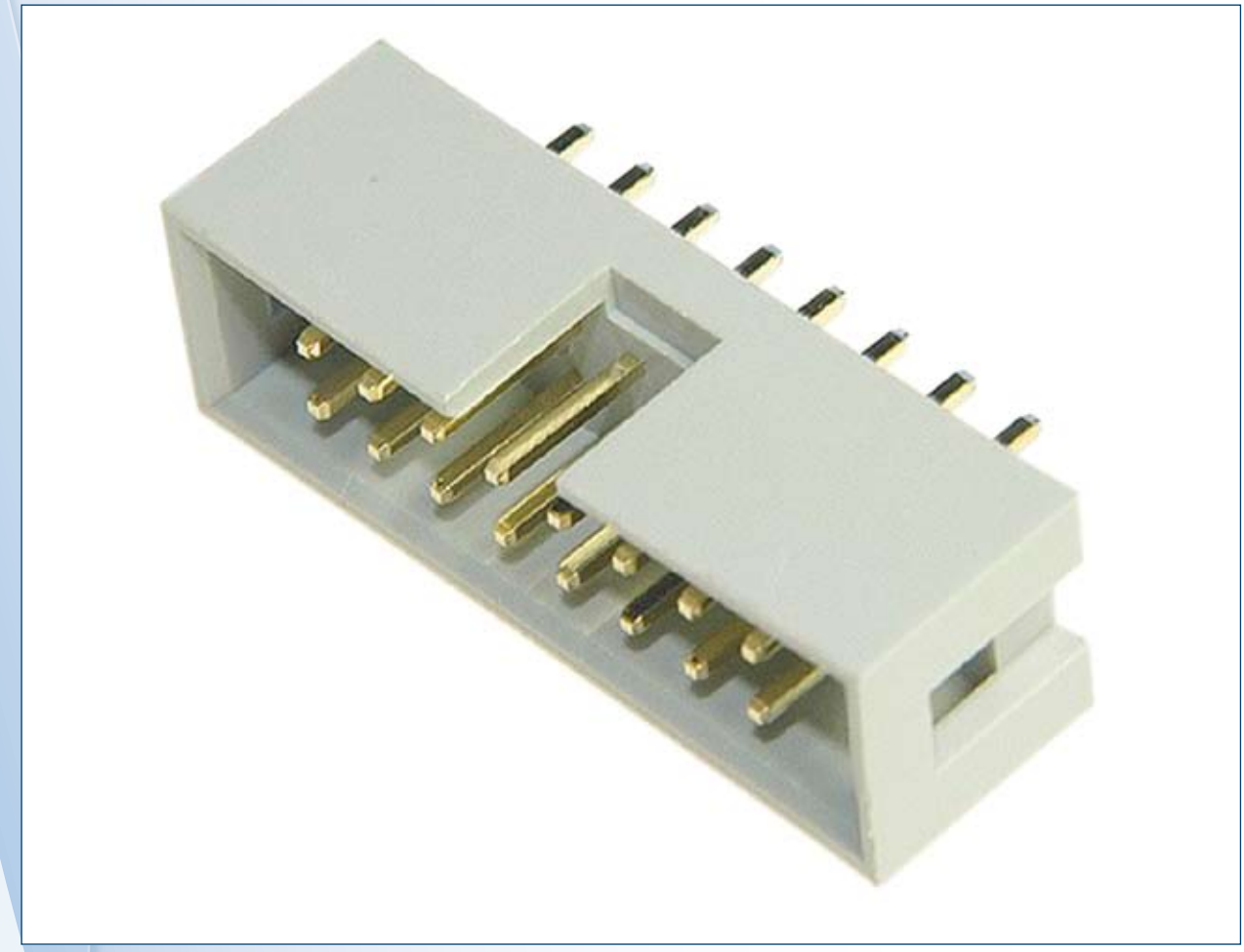

Specifications:

- Contact Resistance: 20 mohm Max
- Insulation Resistance: 1000 Mohms Min
- Current Rating: 3AMP
- Withstand Voltage: 1000V AC/minute
- Operation Temperature: -40 degree up+105 degree

Materials:

- Insulator: High Temperature Thermoplastic, UL94V-0 rated
- Contact: Brass
- Plating: Au or Sn Over 50µ" Ni

Part Numbers:

P/N	Number of positions
T821110A1S100CEU	10
T821114A1S100CEU	14
T821116A1S100CEU	16
T821120A1S100CEU	20
T821126A1S100CEU	26
T821134A1S100CEU	34

IDC FLEX PRINT CONNECTORS

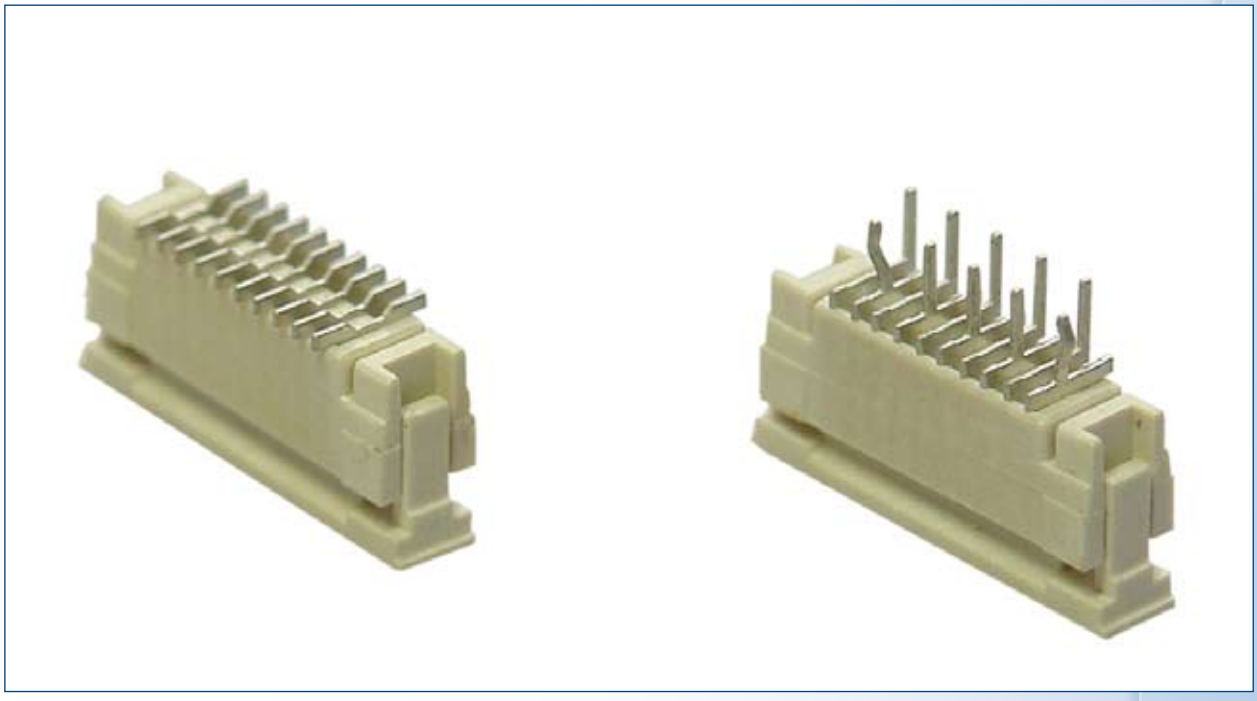

Specifications:

- Operating Current: 0.5 Amp per contact at 70°C
- Rating Voltage: 63 V
- Contact Resistance: < 20 mohm
- Insulation Resistance: > 1000 Mohm

Materials:

- Contact spacing: 1.0mm pitch
- Insulation Material: LCP
- Contact Material: Phosphor Bronze
- Contact plating: 4 µm tinned all over

Part Numbers:

Part Number	Positions	Type
C007-10B-012-0001	12	Straight
C007-10B-012-1001	12	Right Angle
C007-10B-014-0001	14	Straight
C007-10B-014-1001	14	Right Angle
C007-10B-016-0001	16	Straight
C007-10B-016-1001	16	Right Angle
C007-10B-017-0001	17	Straight
C007-10B-017-1001	17	Right Angle
C007-10B-018-0001	18	Straight
C007-10B-018-1001	18	Right Angle
C007-10B-022-0001	22	Straight
C007-10B-022-1001	22	Right Angle
C007-10B-025-0001	25	Straight
C007-10B-025-1001	25	Right Angle
C007-10B-026-0001	26	Straight
C007-10B-026-1001	26	Right Angle
C007-10B-030-0001	30	Straight
C007-10B-030-1001	30	Right Angle

PCI-EXPRESS

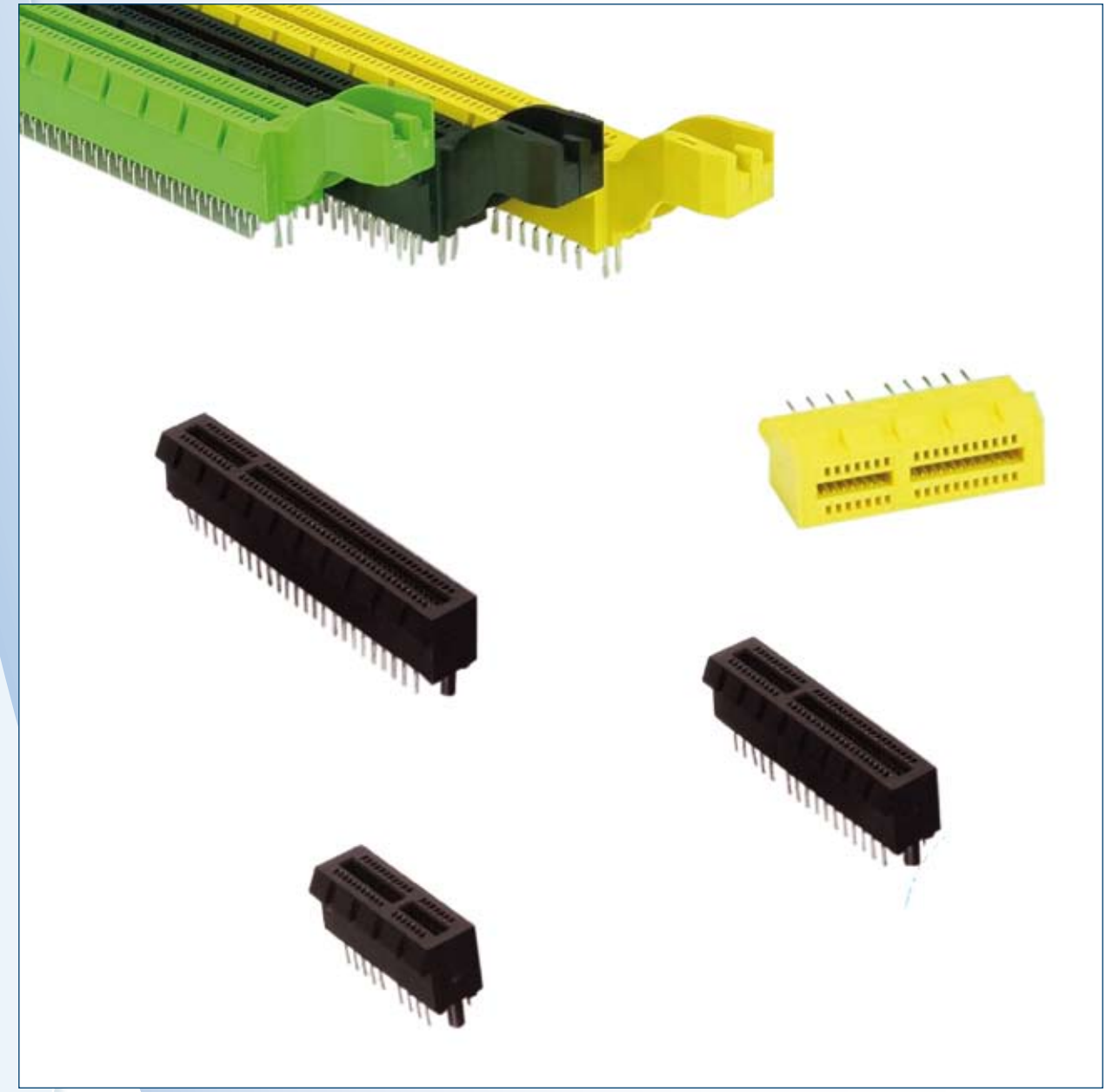

PCI-EXPRESS CARD EDGE CONNECTOR LINE

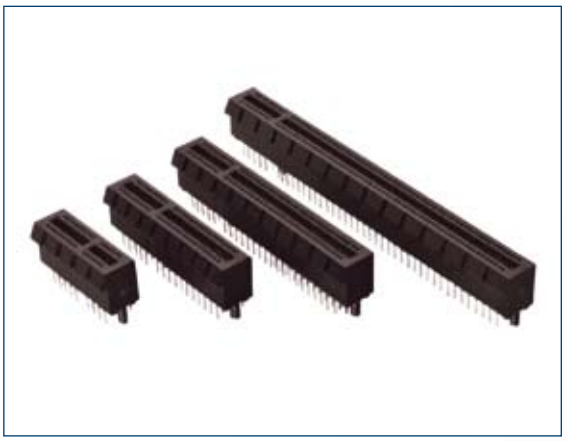

Specifications:

- Contact Resistance: 20 mohm Max
- Insulation Resistance: 1000 Mohms Min
- Current Rating: 1.1A maximum
- Voltage rating: 50V AC rms
- Operating temperature: 0 ~ 65°C

Materials:

- Insulator: High temperature thermoplastic, UL 94V-0 rated
- Contact: Copper Alloy, Gold flash, 15U" gold or 30U" gold
- Shell: Phosphor bronze

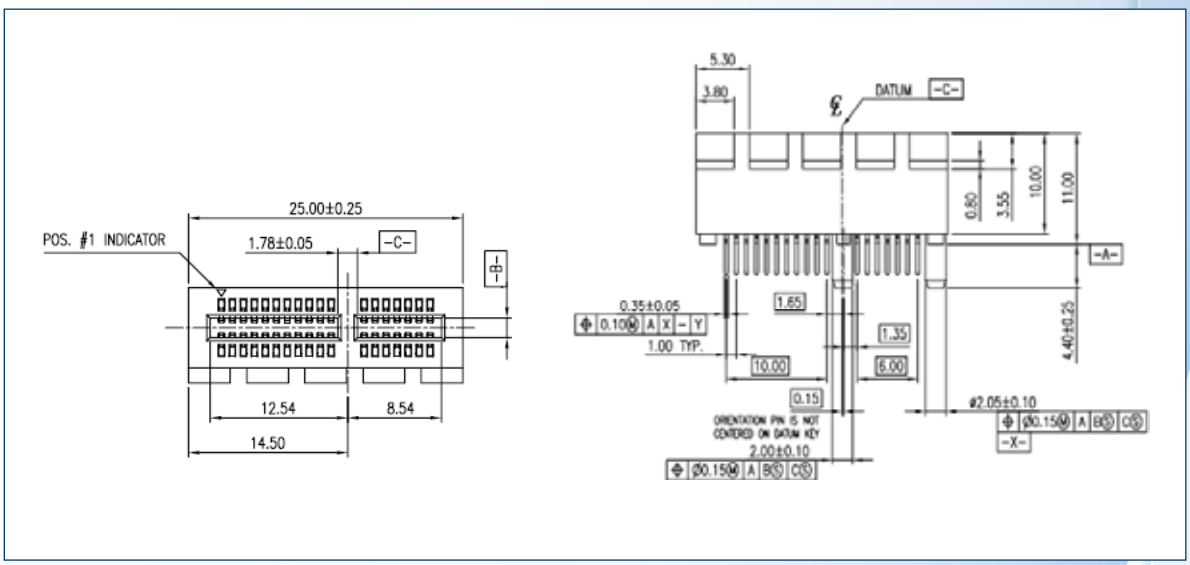

Part Numbers:

AMTA P/N	Positions	Board Mount Type	PCB Thickness	Plating
G630E3601210	36 (1 Port)	Plastic Locator	1.56mm	G/F
G630E3611210				15u"
G630E6401210	64 (4 Ports)	Plastic Locator	1.56mm	G/F
G630E6411210				15u"
G630E9801210	98 (8 Ports)	Plastic Locator	1.56mm	G/F
G630E9811210				15u"
G630EAA03220	164 (16 Ports) w/ Latch	Metal Boardlock	1.56mm	G/F
G630EAA13220				15u"

MEMORY CARD CONNECTOR

SINGLE CARD – SD CONNECTOR

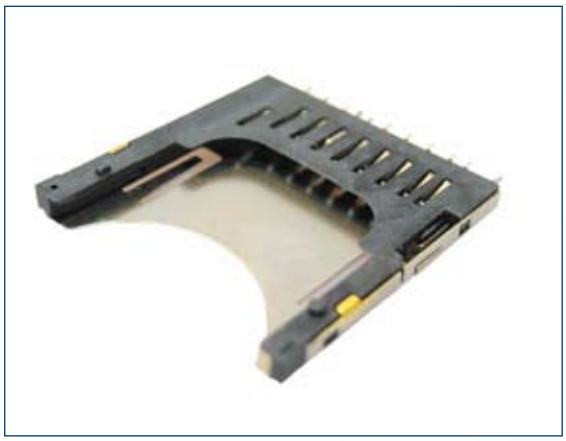

Specifications:

- Contact Resistance: 100 mΩ max at 100 mA DC
- Insulation Resistance: 100 MΩ minimum at 250 VDC
- Voltage rating: 100V AC
- Dielectric Strength: 500 VAC/RMS initial and 250VAC/RMS at 60 Hz for 1 minute
- Operating Temperature: -20°C to +65°C

Materials:

- Insulator: High temperature thermoplastic, UL 94-0
- Contact: Copper alloy, selective gold plated on contact area, tin plated on solder tail
- Shell: Copper alloy, selective gold flash plated on solder tail

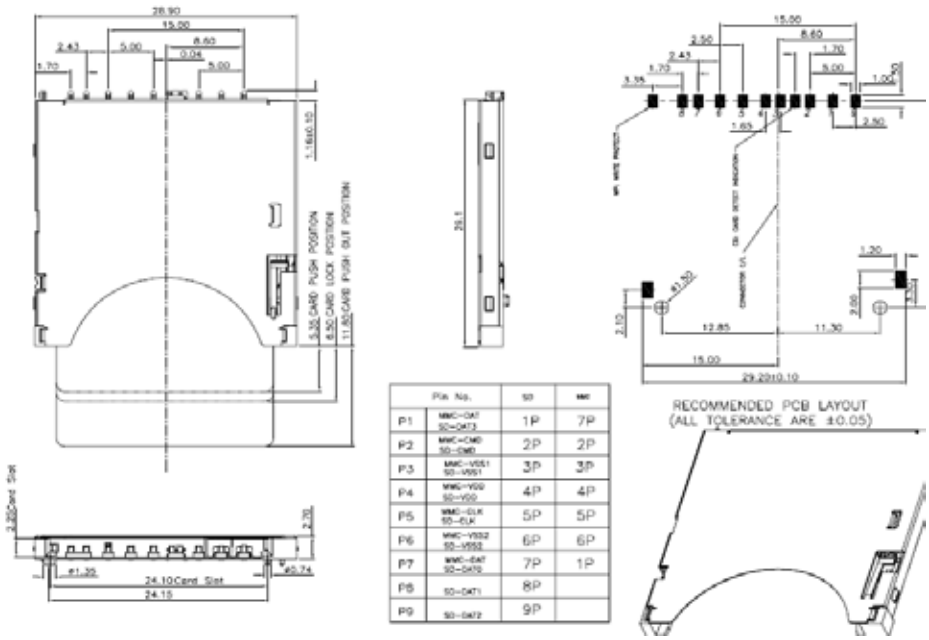

Pin No.		SD	MMC
P1	MMC-DAT SD-DAT3	1P	7P
P2	MMC-CMD SD-CMD	2P	2P
P3	MMC-VSS1 SD-VSS1	3P	3P
P4	MMC-VDD SD-VDD	4P	4P
P5	MMC-CLK SD-CLK	5P	5P
P6	MMC-VSS2 SD-VSS2	6P	6P
P7	MMC-DAT SD-DAT0	7P	1P
P8	SD-DAT1	8P	
P9	SD-DAT2	9P	

Part Numbers:

	Description
101-00313-64	SD P-P Connector, Stand-off = 0mm, 1u " Au plated
101-00313-68	SD P-P Connector, Stand-off = 0mm, 15u " Au plated
101-00313-69	SD P-P Connector, Stand-off = 0mm, 30 u " Au plated
101-00405-64	SD P-P Connector, Stand-off = 1.8mm, 1u " Au plated
101-00405-68	SD P-P Connector, Stand-off = 1.8mm, 15u " Au plated
101-00405-69	SD P-P Connector, Stand-off = 1.8mm, 30 u " Au plated

SINGLE CARD-CF CONNECTOR

Specifications:

- Contact Resistance: 40 mΩ max at 100 mA DC
- Insulation Resistance: 1000 MΩ minimum at 250 VDC
- Voltage rating: 100V AC
- Dielectric Strength: 500 VAC/RMS initial and 250VAC/RMS at 60 Hz for 1 minute
- Operating Temperature: -20°C to +60°C

Materials:

- Insulator: High temperature thermoplastic, UL 94-0
- Contact: Copper alloy, selective gold plated on contact area, tin plated on solder tail
- Ground : Copper alloy, Tin plated on solder tail over Nickle plated

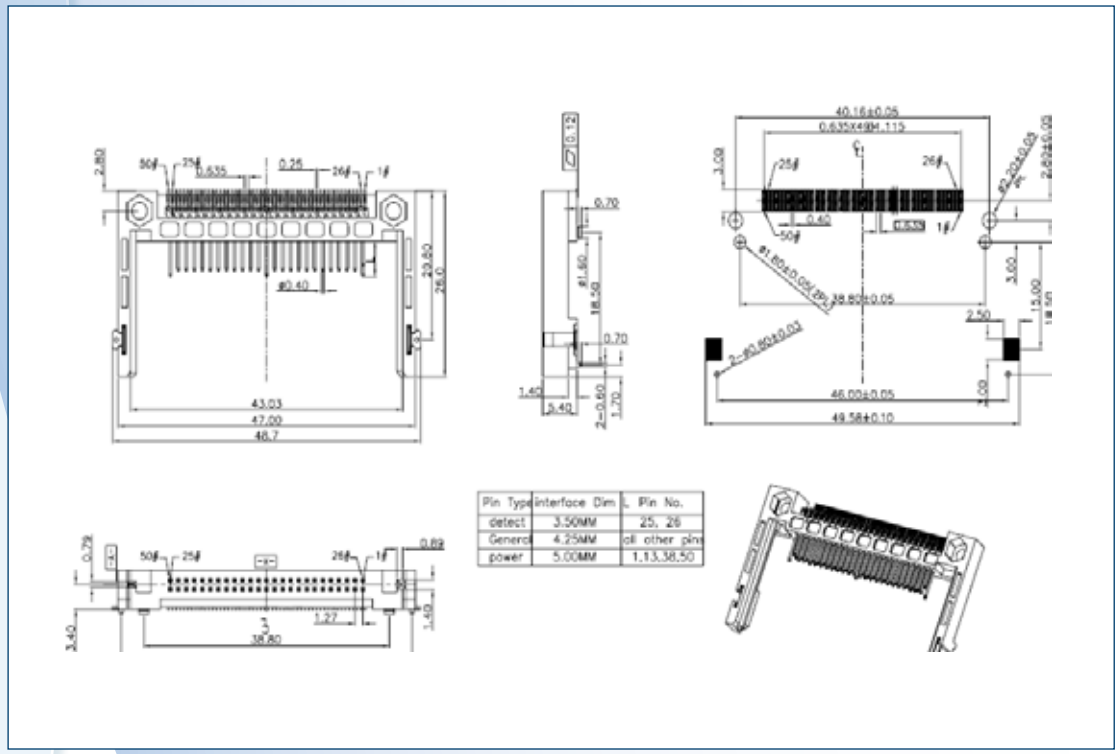

Part Numbers:

P/N	Description
101-00178-68	CF, Ultra short body, 15 u " Au plated
101-00205-64	CF, Stand-off = 1.4mm, 1 u " Au plated
101-00205-68	CF, Stand-off = 1.4mm, 15 u " Au plated
101-00205-69	CF, Stand-off = 1.4mm, 30 u " Au plated
101-00140-64	CF, L=26.00mm, post=40.16, Hexagon screw hole, Stand-off=1.4mm, w/ Metal shell, 1 u " Au plated
101-00140-68	CF, L=26.00mm, post=40.16, Hexagon screw hole, Stand-off=1.4mm, w/ Metal shell, 15 u " Au plated
101-00140-69	CF, L=26.00mm, post=40.16, Hexagon screw hole, Stand-off=1.4mm, w/ Metal shell, 30 u " Au plated
101-00265-64	CF, L=26.00mm, post=38.80, Hexagon screw hole, Stand-off=1.4mm, w/ Metal shell, 1 u " Au
101-00265-68	CF, L=26.00mm, post=38.80, Hexagon screw hole, Stand-off=1.4mm, w/ Metal shell, 15 u " Au
101-00265-69	CF, L=26.00mm, post=38.80, Hexagon screw hole, Stand-off=1.4mm, w/ Metal shell, 30 u " Au

MINIATURE CARD – MICRO SD CONNECTOR

Specifications:

- Contact Resistance: 100 mΩ max at 100 mA
- Insulation Resistance: 1000 MΩ min at 500 VDC
- Voltage rating: 100V AC
- Current Rating: 0.5 A per contact
- Dielectric Strenght: 500 VAC/RMS initial and 250 VAC final at 60 Hz for 1 minute
- Operating Temperature: -25°C to +85°C

Materials:

- Housing: High Temperature thermoplastic, UL94V-0 rated
- Contact: Copper alloy with selective Au plating, Tin plated on solder tail
- Cover: Copper alloy nickel overall

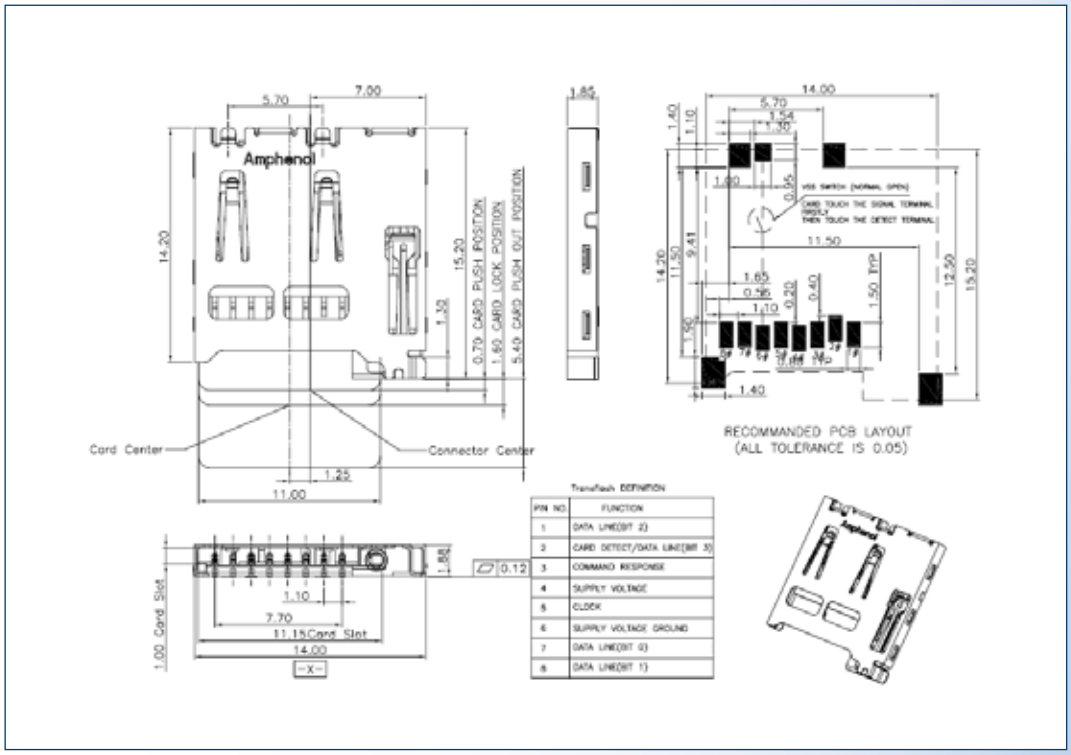

Part Numbers:

P/N	Description
101-00112-68	Micro-SD 8P p-p, w/o C/D, 15 u " Au plated
101-00139-64	Micro-SD 9P p-p, w/ C/D , 1 u " Au plated
101-00139-68	Micro-SD 9P p-p, w/ C/D , 15 u " Au plated
101-00139-69	Micro-SD 9P p-p, w/ C/D , 30 u " Au plated
101-00240-64	Micro-SD 8P, manual, w/ C/D, 1 u " Au plated
101-00240-68	Micro-SD 8P, manual, w/ C/D, 15 u " Au plated
101-00240-69	Micro-SD 8P, manual, w/ C/D, 30 u " Au plated
101-00349-64	Micro-SD 9P p-p, w/ C/D, 1 u " Au plated
101-00349-68	Micro-SD 9P p-p, w/ C/D, 15 u " Au plated
101-00349-69	Micro-SD 9P p-p, w/ C/D, 30 u " Au plated
101-00303-68	Micro SD Hinge Type, 15 u " Au plated
101-00581-59	Micro-SD p-p w/ C/D (Normal Close), 20u " Au plated

MINIATURE CARD –SIM + MICRO-SD COMBO CONNECTOR

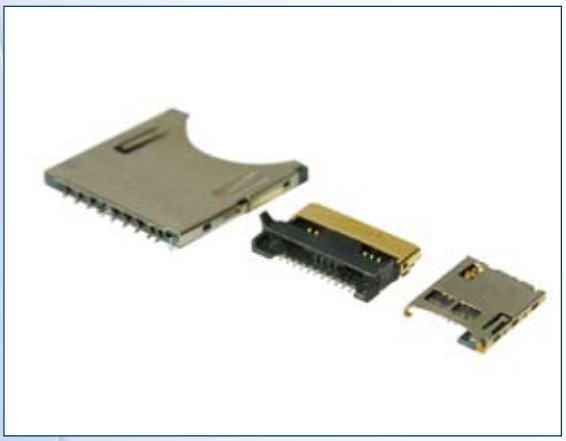

Specifications:

- Contact Resistance: 100 mΩ max at 100 mA
- Insulation Resistance: 1000 MΩ min at 500 VDC
- Voltage rating: 100V AC
- Current Rating: 0.5 A per contact
- Dielectric Strenght: 500 VAC/RMS initial and 250 VAC final at 60 Hz for 1 minute
- Operating Temperature: -25°C to +70°C

Materials:

- Housing: High Temperature thermoplastic, UL94V-0 rated
- Contact: Copper alloy with selective Au plating, Tin plated on solder tail
- Cover: Copper alloy nickel overall

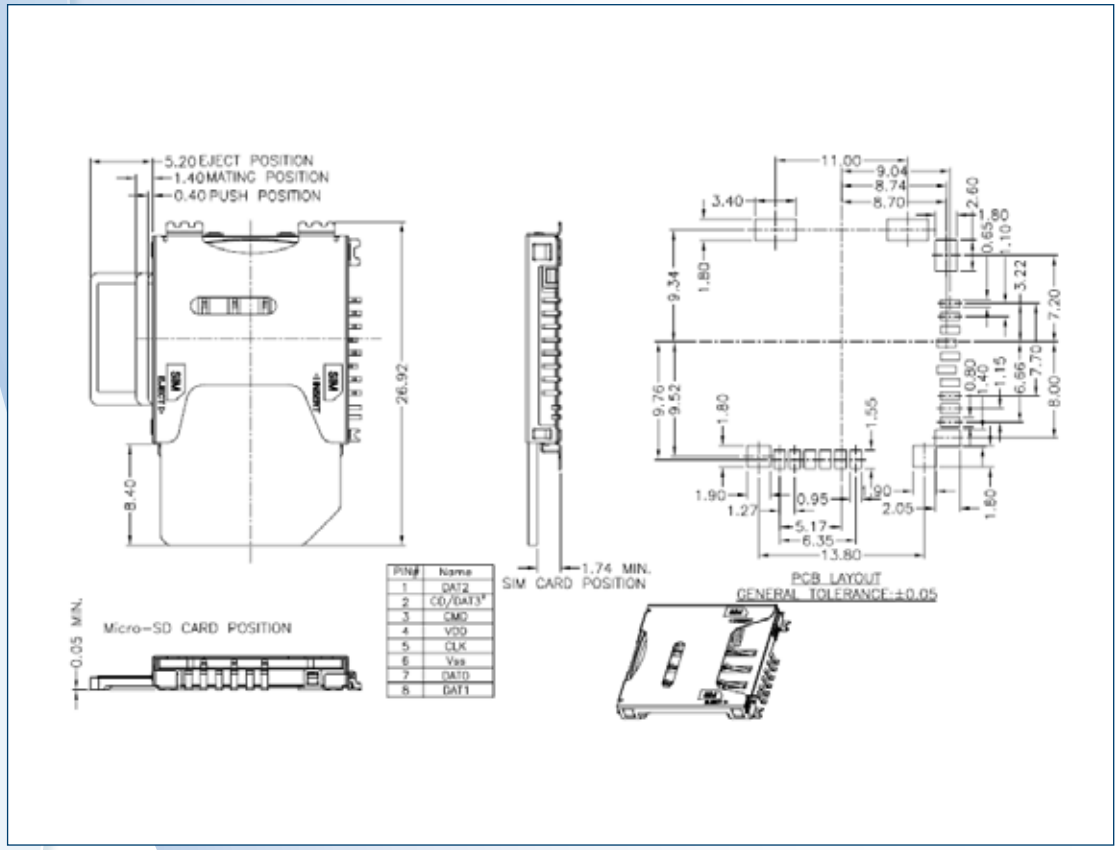

Part Numbers:

P/N	Description
101-00294-68	SIM + Micro-SD p-p, Combo, 15 u " Au plated
101-00359-68	Dual SIM + Micro SD p-p, Combo, 15 u " Au plated

MINIATURE CARD –SIM + MICRO-SD COMBO CONNECTOR

Specifications:

- Contact Resistance: 50 mΩ max at 100 mA
- Insulation Resistance: 500 MΩ min at 500 VDC
- Voltage rating: 100V AC
- Current Rating: 0.5 A per contact
- Dielectric Strenght: 500 VAC/RMS initial and 250 VAC final at 60 Hz for 1 minute
- Operating Temperature: -25°C to +85°C

Materials:

- Housing: High Temperature thermoplastic, UL94V-0 rated
- Contact: Copper alloy with selective Au plating, Tin plated on solder tail
- Cover: SUS Nickle overall

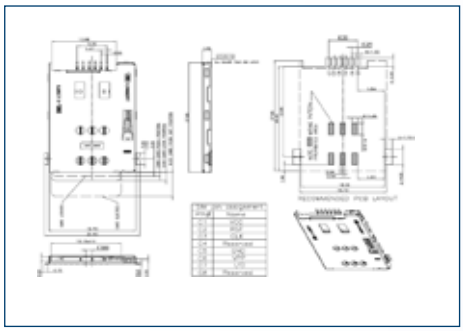

Part Numbers:

P/N	Description
101-00269-64	SIM 6P p-p, Normal Type, w/o C/D, 1 u " Au plated
101-00269-68	SIM 6P p-p, Normal Type, w/o C/D, 15 u " Au plated
101-00269-69	SIM 6P p-p, Normal Type, w/o C/D, 30 u " Au plated
101-00270-64	SIM 6P p-p, Reverse Type, w/o C/D, 1 u " Au plated
101-00270-68	SIM 6P p-p, Reverse Type, w/o C/D, 15 u " Au plated
101-00270-69	SIM 6P p-p, Reverse Type, w/o C/D, 30 u " Au plated

P/N	Description
101-00271-64	SIM 8P p-p, Normal Type, w/ C/D, 1 u " Au plated
101-00271-68	SIM 8P p-p, Normal Type, w/ C/D, 15 u " Au plated
101-00271-69	SIM 8P p-p, Normal Type, w/ C/D, 30 u " Au plated
101-00272-64	SIM 8P p-p, Reverse Type, w/ C/D, 1 u " Au plated
101-00272-68	SIM 8P p-p, Reverse Type, w/ C/D, 15 u " Au plated
101-00272-69	SIM 8P p-p, Reverse Type, w/ C/D, 30 u " Au plated
101-00306-64	SIM 8P p-p, Reverse Type, w/ C/D , 1 u " Au plated
101-00306-68	SIM 8P p-p, Reverse Type, w/ C/D , 15 u " Au plated
101-00306-69	SIM 8P p-p, Reverse Type, w/ C/D , 30 u " Au plated
101-00309-64	SIM 8P p-p, Normal Type, w/o C/D, 1 u " Au plated
101-00309-68	SIM 8P p-p, Normal Type, w/o C/D, 15 u " Au plated
101-00309-69	SIM 8P p-p, Normal Type, w/o C/D, 30 u " Au plated
101-00364-64	SIM 8P p-p, Reverse Type, w/o C/D, 1 u " Au plated
101-00364-68	SIM 8P p-p, Reverse Type, w/o C/D, 15 u " Au plated
101-00364-69	SIM 8P p-p, Reverse Type, w/o C/D, 30 u " Au plated
101-00365-64	SIM 6P p-p, Reverse Type, w/ C/D, 1 u " Au plated
101-00365-68	SIM 6P p-p, Reverse Type, w/ C/D, 15 u " Au plated
101-00365-69	SIM 6P p-p, Reverse Type, w/ C/D, 30 u " Au plated

COMBO CARD –MEMORY COMBO CONNECTOR

Specifications:

- Contact Resistance: 100 mΩ max at 100 mA
- Insulation Resistance:1000 MΩ min at 500 VDC
- Voltage rating: 250 V AC
- Current Rating: 0.5 A per contact
- Dielectric Strenght: 500 VAC/RMS initial and 250 VAC final at 60 Hz for 1 minute
- Operating Temperature: -25°C to +60°C

Materials:

- Housing: High Temperature thermoplastic, UL94V-0 rated
- Contact: Copper alloy with selective Au plating, Tin plated on solder tail
- Cover: Copper alloy with Nickle plated overall

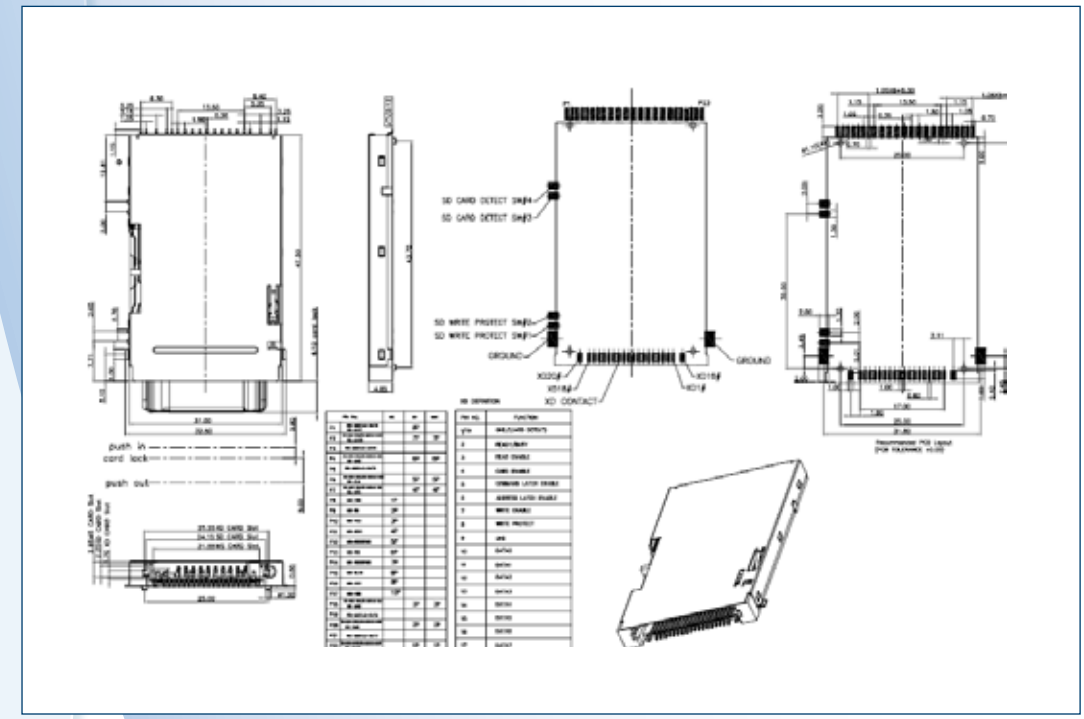

Part Numbers:

P/N	Description
101-00295-64	4-in-1 Memory Combo Conn., Card-End Even Type, 1 u " Au plated
101-00295-68	4-in-1 Memory Combo Conn., Card-End Even Type, 15 u " Au plated
101-00295-69	4-in-1 Memory Combo Conn., Card-End Even Type, 30 u " Au plated
101-00412-64	4-in-1 Combo, PCB , Card-End Un-even Type, 1 u " Au plated
101-00412-68	4-in-1 Combo, PCB , Card-End Un-even Type, 15 u " Au plated
101-00412-69	4-in-1 Combo, PCB , Card-End Un-even Type, 30 u " Au plated
101-00402-64	3-in-1 Combo, Card-End Un-even Type, 1 u " Au plated
101-00402-68	3-in-1 Combo, Card-End Un-even Type, 15 u " Au plated
101-00402-69	3-in-1 Combo, Card-End Un-even Type, 30 u " Au plated
101-00578-64	3-in-1 Combo, Card-End Even Type, 1 u " Au plated
101-00578-68	3-in-1 Combo, Card-End Even Type, 15 u " Au plated
101-00578-69	3-in-1 Combo, Card-End Even Type, 30 u " Au plated

COMBO CARD –MEMORY COMBO CONNECTOR

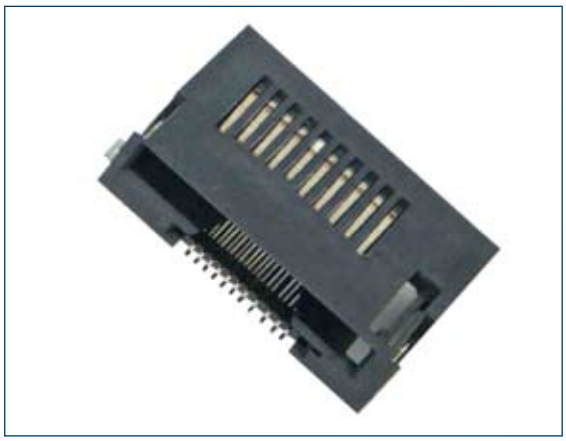

Specifications:

- Contact Resistance: 100 mΩ max at 100 mA
- Insulation Resistance:1000 MΩ min at 500 VDC
- Voltage rating: 100 V AC
- Current Rating: 0.5 A per contact
- Dielectric Strenght: 500 VAC/RMS initial and 250 VAC final at 60 Hz for 1 minute
- Operating Temperature: -25°C to +60°C

Materials:

- Housing: High Temperature thermoplastic, UL94V-0 rated
- Contact: Copper alloy with selective Au plating, 0Tin plated on solder tail
- Ground: Copper alloy with Nickle plated overall

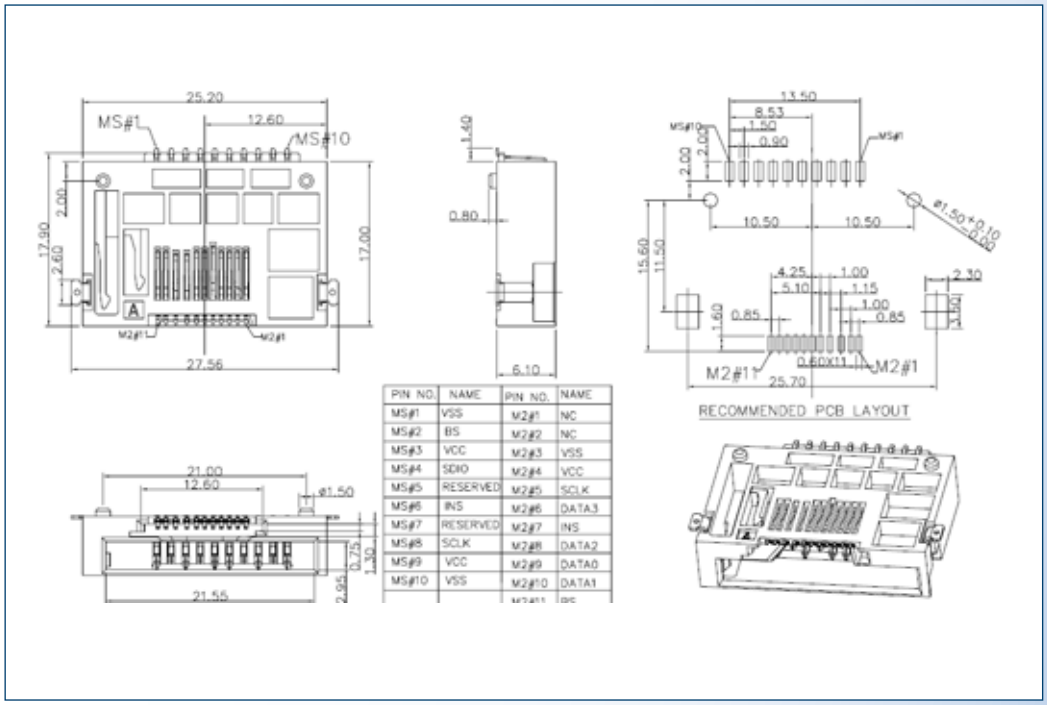

PIN NO.	NAME	PIN NO.	NAME
MS#1	VSS	M2#1	NC
MS#2	BS	M2#2	NC
MS#3	VCC	M2#3	VSS
MS#4	SDIO	M2#4	VCC
MS#5	RESERVED	M2#5	SCLK
MS#6	INS	M2#6	DATA3
MS#7	RESERVED	M2#7	INS
MS#8	SCLK	M2#8	DATA2
MS#9	VCC	M2#9	DATA0
MS#10	VSS	M2#10	DATA1

Part Numbers:

P/N	Description
101-00356-64	3-in-1 Conn (MS,MS Duo,M2), 1 u " Au plated
101-00356-68	3-in-1 Conn (MS,MS Duo,M2), 15 u " Au plated
101-00356-69	3-in-1 Conn (MS,MS Duo,M2), 30 u " Au plated

ADAPTER – MINI SD TO SD

Specifications:

- Contact Resistance: 100 mΩ max at 100 mA
- Insulation Resistance:1000 MΩ min at 500 VDC
- Voltage rating: 100 V AC
- Current Rating: 1 A per contact
- Dielectric Strenght: 500 VAC/RMS initial and 250 VAC final at 60 Hz for 1 minute
- Operating Temperature: -25°C to +85°C

Materials:

- Housing: High Temperature thermoplastic, UL94V-0 rated
- Contact: Copper alloy with selective Au plating
- Latch : Stainless steel

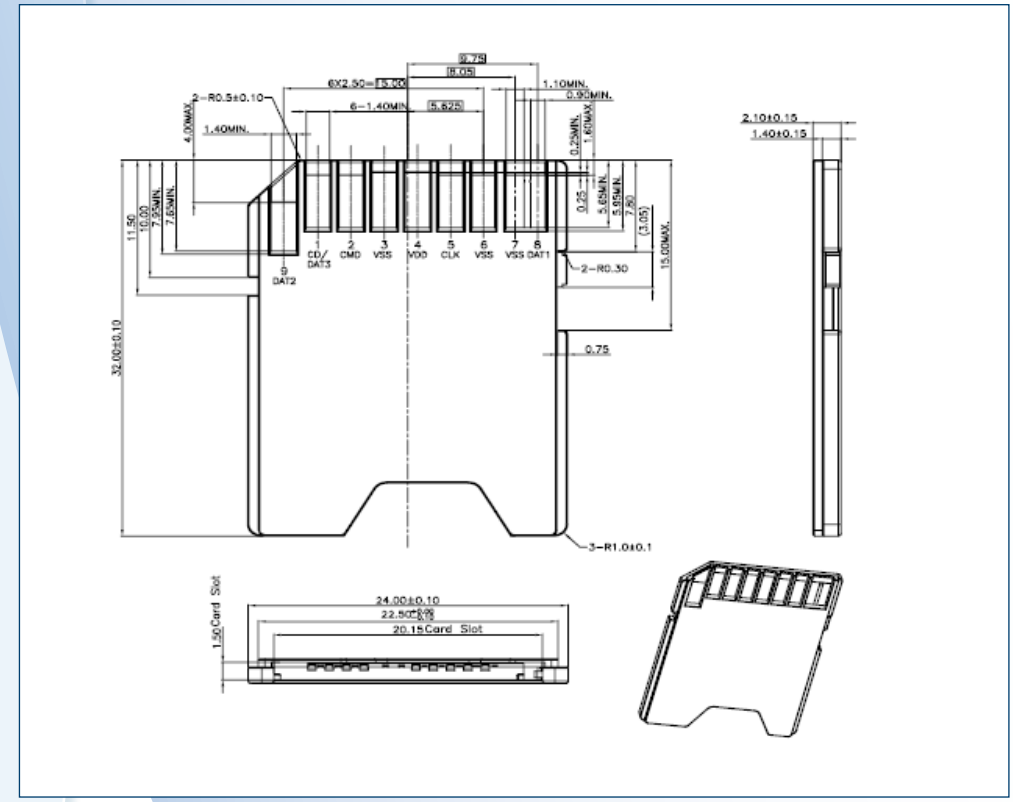

Part Numbers:

P/N	Description
106-00069-10	mini-SD to SD Adapter, 1 u " Au plated
106-00069-14	mini-SD to SD Adapter, 15 u " Au plated
106-00069-15	mini-SD to SD Adapter, 30 u " Au plated
106-00120-10	mini-SD to SD Adapter w/shell, 1 u " Au plated
106-00120-14	mini-SD to SD Adapter w/shell, 15 u " Au plated
106-00120-15	mini-SD to SD Adapter w/shell, 30 u " Au plated

ADAPTER – MICRO SD TO MINI SD

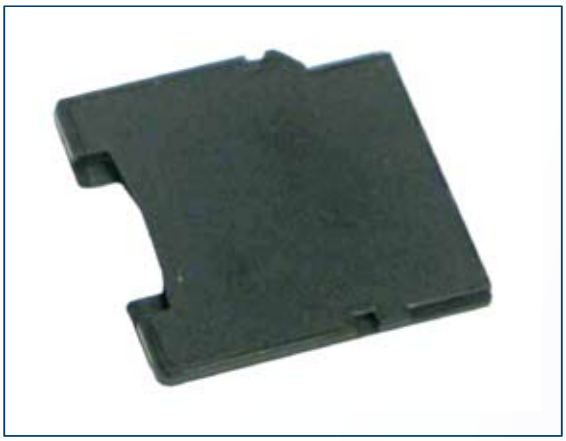

Specifications:

- Contact Resistance: 140 mΩ max at 100 mA
- Insulation Resistance:500 MΩ min at 500 VDC
- Voltage rating: 100 V AC
- Current Rating: 1 A per contact
- Dielectric Strenght: 500 VAC/RMS initial and 250 VAC final at 60 Hz for 1 minute
- Operating Temperature: -25°C to +85°C

Materials:

- Housing: High Temperature thermoplastic, UL94V-0 rated
- Contact: Copper alloy with selective Au plating
- Latch : Stainless steel

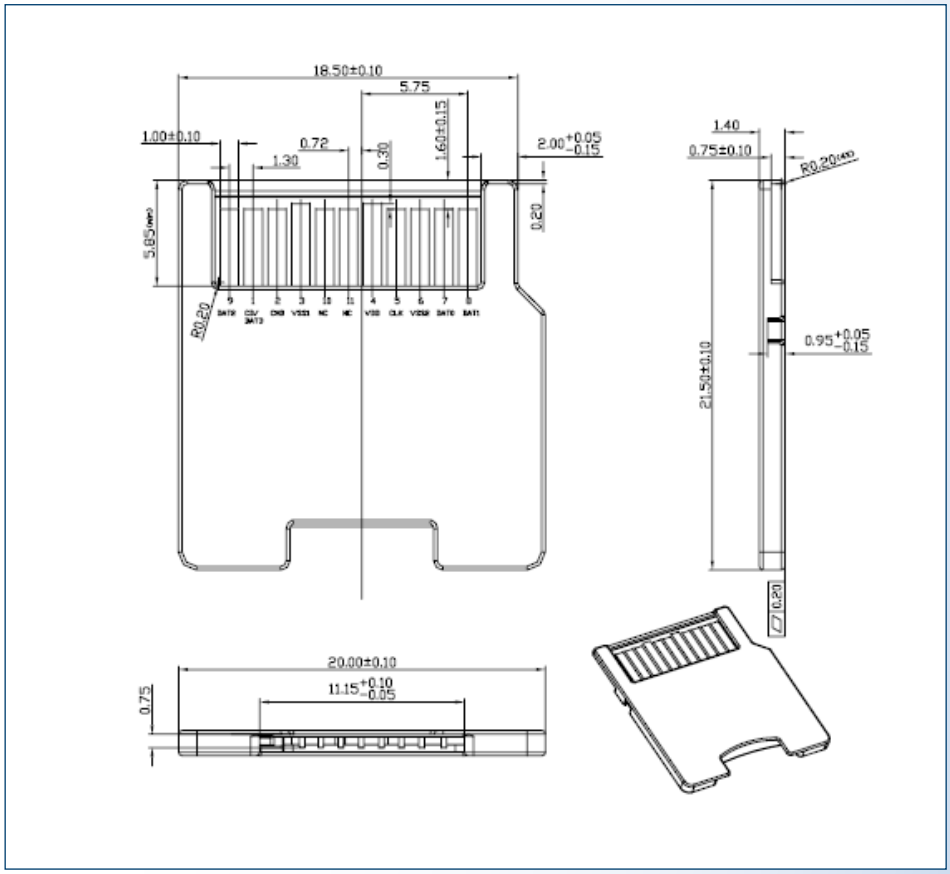

Part Numbers:

P/N	Description
106-00330-10	micro-SD to mini-SD Adapter, 1 u " Au plated
106-00330-14	micro-SD to mini-SD Adapter, 15 u " Au plated
106-00330-15	micro-SD to mini-SD Adapter, 30 u " Au plated

ADAPTER – MICRO SD TO SD

Specifications:

- Contact Resistance: 100 mΩ max at 100 mA
- Insulation Resistance:1000 MΩ min at 500 VDC
- Voltage rating: 100 V AC
- Current Rating: 1 A per contact
- Dielectric Strenght: 500 VAC/RMS initial and 250 VAC final at 60 Hz for 1 minute
- Operating Temperature: -25°C to +85°C

Materials:

- Housing: High Temperature thermoplastic, UL94V-0 rated
- Contact: Copper alloy with selective Au plating
- Latch : Stainless steel

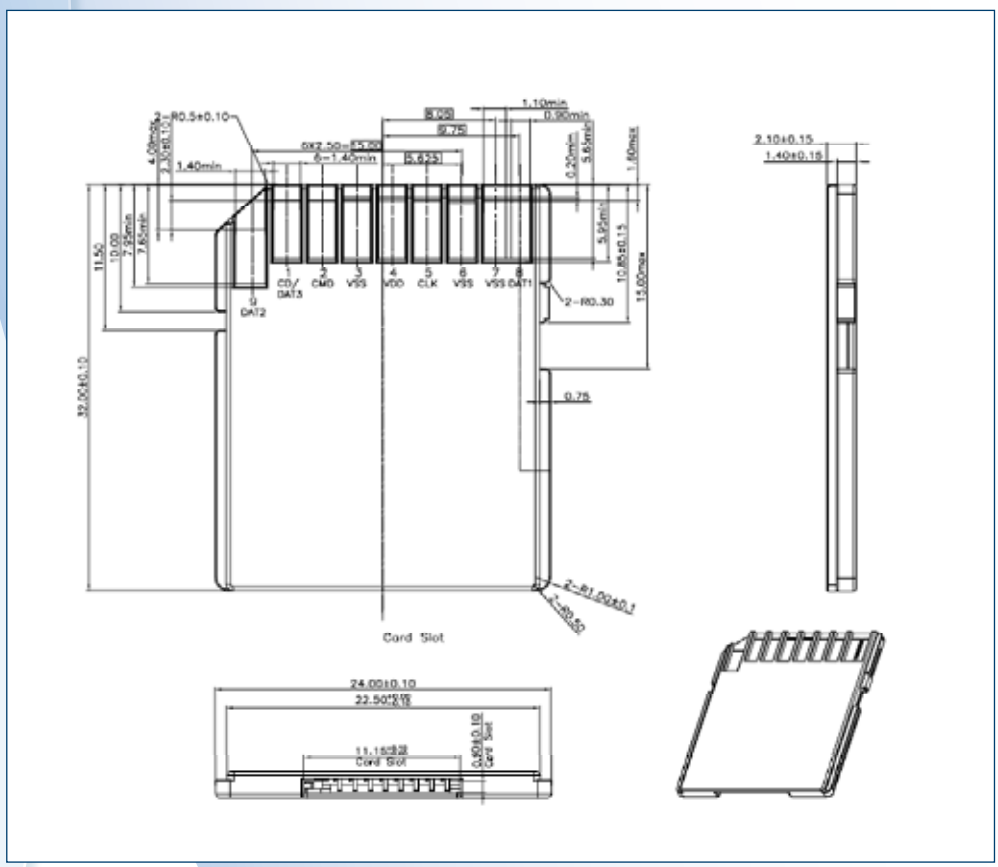

Part Numbers:

P/N	Description
106-00351-10	micro-SD to SD Adapter, 1 u " Au plated
106-00351-14	micro-SD to SD Adapter, 15 u " Au plated
106-00351-15	micro-SD to SD Adapter, 30 u " Au plated

RF

BNC

Specifications:

- Center Contact Resistance: 1,5 mΩ
- Outer Contact Resistance: 1 mΩ
- Insulation Resistance: 5000 mohm minimum
- Dielectric withstanding voltage: 1500 Volts RMS
- VSWR: 50 ohm: 1.3 max. 0-4GHz, 75 ohm:
- 1.05+0.1f(GHz) DC to 1 GHz.

Materials:

- Male contact: Brass, Gold or Silver plated
- Female contact: Phosphore Bronze (nominal) or
- Beryllium Copper, Gold or Silver plated
- Insulators: Teflon, Delrin, PBT polyester
- Clamp gaskets: Silicone rubber, Synthetic rubber

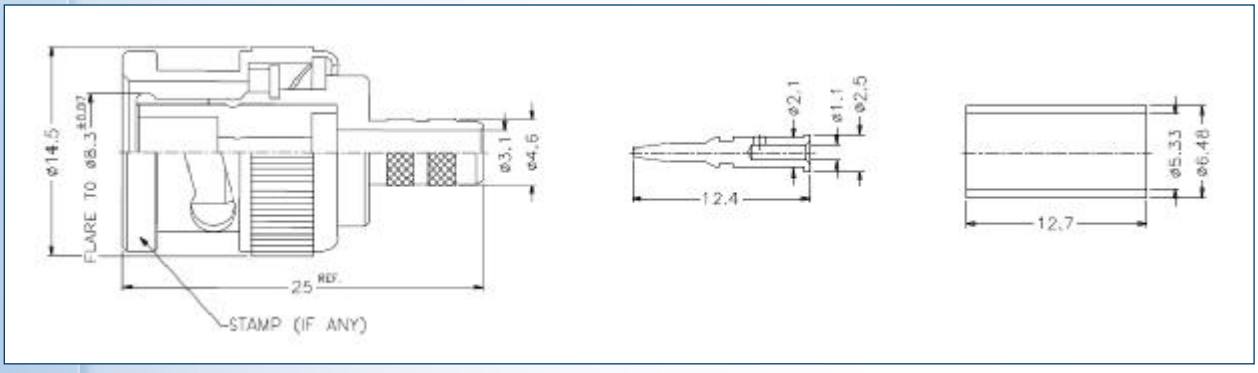

Part Numbers:

Part number	Gender	Straight/ R/A	Cable Group	Ins.	Imp.	Ace-tool
B1121A1-ND3G-1A-50	Male	Straight	1A	Delrin	50	3/4
B1121A1-ND3G-1-50			1	Delrin	50	3/4
B1121A1-ND3G-3-50			3	Delrin	50	4
B1121A1-ND3G-3-75			3	Delrin	75	4
B1121A1-ND3G-8-75			8	Delrin	75	4
B1121A1-ND3G-16-75			16	Delrin	75	.180 hex
B1121A1-ND3G-7B-50			7B	Delrin	50	4
B1121A6-NT3G-7-50			7	Teflon	50	4+6
B1121A6-NT3G-7C-50			7C	Teflon	50	6
B1121A9-NT15G-18-75			18	Teflon	75	2+4
B1121E1-ND3G-5-50			5	Delrin	50	3
B1121E2-003-ND3G-6-75			6	Delrin	75	3
B1121H1-001-ND3G-14-50			14	Delrin	50	9
B6121A1-NT3G-1-50	Female		1	Teflon	50	3/4
B6121A1-NT3G-3-75			3	Teflon	75	4
B6121A2-NT3G-8A-75			8A	Teflon	75	2+5
B6121B1-ND3G-16-75			16	Delrin	75	9
B6121E1-ND3G-5-50			5	Delrin	50	9
B6421A1-NT3G-1-50			1	Teflon	50	4
B6421A1-NT3G-3-75			3	Teflon	75	4
B6421E1-ND3G-6-75			6	Delrin	75	9
B6421G1-ND3G-14-50			14	Delrin	50	1/2
B625100-009-NT3G-50			N/A	Teflon	50	
B6251C1-NT3G-50			N/A	Teflon	50	
B6551E1-001-NT3G-50			N/A	Teflon	50	
B6252H6-NPP3G-75T		R/A	N/A	PBT Polyester	75	
B6252H8-NPP3G-75T			N/A	PBT Polyester	75	

MCX

Specifications:

- Center Contact Resistance: 5 mΩ
- Outer Contact Resistance: 1 mΩ
- Insulation Resistance: 5000 mohm minimum
- Dielectric withstanding voltage @ sea level: 1000 Volts
- Temperature range: -65°C to 165°C

Materials:

- Male contact: Brass per QQB-626
- Female contact: Beryllium copper per QQC-530, heat treated per MIL-H-7199
- Contact plating: 30µ" Gold
- Body, Metal Parts: Brass per QQB-626
- Insulator: PTFE
- Gasket:

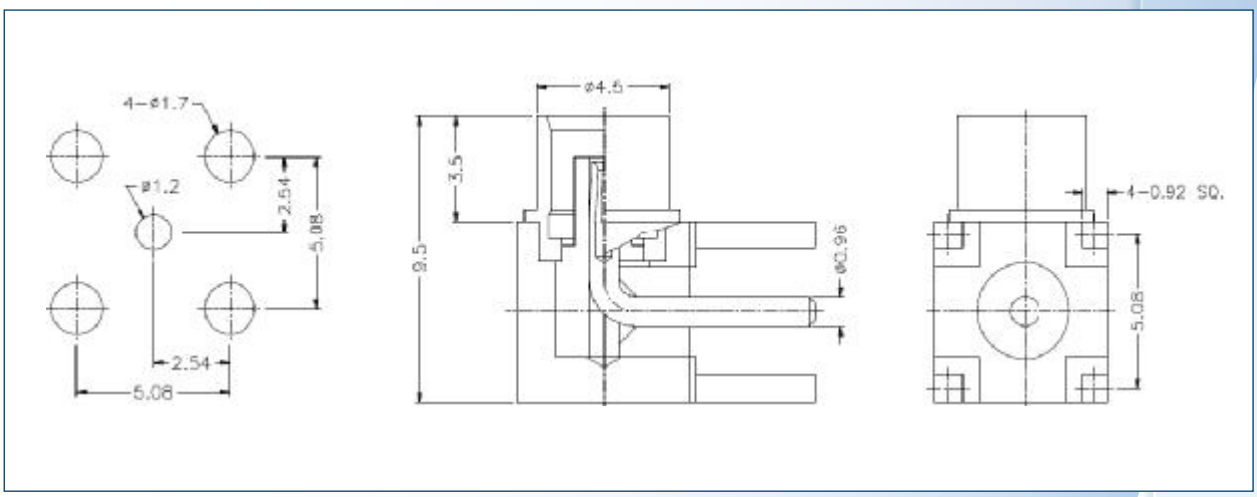

Part Numbers:

	Gender	Mount type	Connect type	Type outline	Manufacturing	Cable Group	Ace-tool
MCX1112A1-3GT30G-5-50	Male	Cable	Single crimp	R/A	Machined Brass	5	1
MCX1121A1-3GT30G-14-50			Double crimp	Straight	Machined Brass	14	1
MCX1121A1-3GT30G-5-50			Double crimp	Straight	Machined Brass	5	1
MCX6121A1-3GT30G-14-50	Female		Double crimp	Straight	Machined Brass	14	1
MCX6121A1-3GT30G-5-50			Double crimp	Straight	Machined Brass	5	1
MCX6251A1-3GT30G-50		P.C. Board	Receptacle	Straight	Machined Brass	N/A	
MCX6252B1-3GT30G-50			Receptacle	R/A	DieCast	N/A	

MMCX

Specifications:

- Center Contact Resistance: 10 mΩ
- Outer Contact Resistance: 3 mΩ
- Insulation Resistance: 500 mΩ
- Dielectric withstanding voltage @ sea level:
- 500 V rms, 50hHz
- Temperature range: -40°C to 90°C

Materials:

- Leads: Beryllium copper with gold plating
- Contact Socket: Beryllium copper with gold plating
- Outer Conductor: Beryllium copper with gold plating
- Housing (SMT): Liquid crystal polymer
- Insulator: PTFE per ASTM-D1457

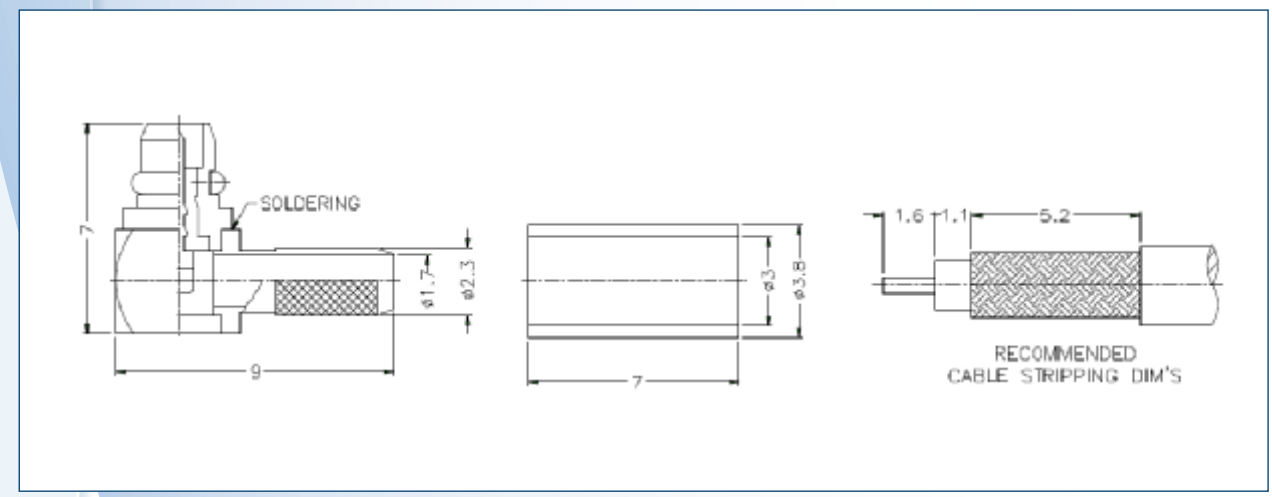

Part Numbers:

		Mount type	Connect type	Type outline	Manufacturing	Cable Group	Ace-tool
MMCX1112A1-3GT30G-14-50	Male	Cable	Single crimp	R/A	Machined Brass	14	1
MMCX1112A1-3GT30G-5-50			Single crimp	R/A	Machined Brass	5	1
MMCX1121A1-3GT30G-14-50			Double crimp	Straight	Machined Brass	14	1
MMCX1121A1-3GT30G-5-50			Double crimp	Straight	Machined Brass	5	1
MMCX6251N2-3GT30G-50	Female	P.C. Board	Receptacle	Straight		N/A	
MMCX6252N1-3GT30G-50			Receptacle	R/A		N/A	

N SERIES

Specifications:

- Center Contact Resistance: 1.0 mΩ
- Outer Contact Resistance: 0.2 mΩ
- Insulation Resistance: 5000 MΩ (min)
- Dielectric withstanding voltage: 2500 Volts RMS

Materials:

- Center contact male: Brass, Gold or Silver plated
- Center contact female: Phosphor Bronze or Beryllium
- Copper, Gold or Silver plated
- Metal parts: Brass, Nickel
- Insulators: Teflon, None
- Clamp gaskets: Sillicone rubber, Synthetic rubber, None
- Crimp ferrules: Annealed copper, Nickel

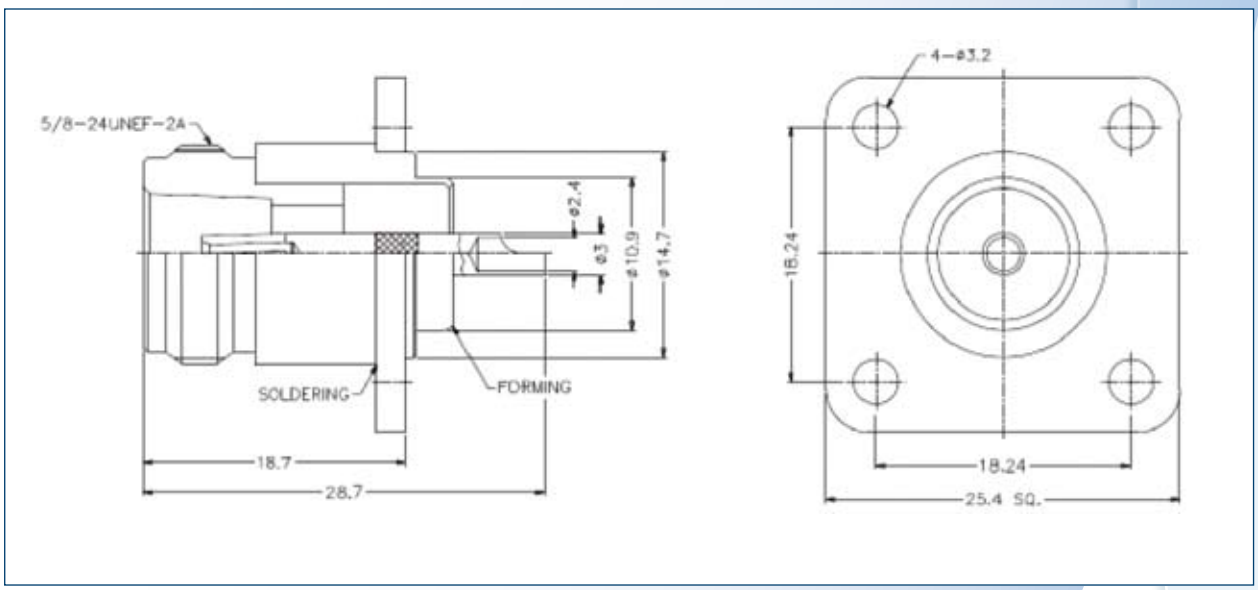

Part Numbers:

	Mount type	Connect type	Manufacturing	Cable	Ace-tool
N6121A2-NT3G-7C-50	Cable	Double crimp		7C	6
N6421A1-NT3G-1A-50	Rear Bulkhead		Machined Brass	1A	4
N6421A1-NT3G-1-50			Machined Brass	1	3/4
N6551A1-NT3G-50	Panel		Machined Brass	N/A	
N6551E1-NT3G-50		Receptacle		N/A	

1.0 / 2.3 SERIES

Specifications:

- Center Contact Resistance: 6 ohm
- Outer Contact Resistance: 3 ohm
- Insulation Resistance: 10,000 megaohms
- Voltage rating: 250 Volts
- Temperature Range: -40 to +155C

Materials:

- Male contact: Brass
- Female contact: Beryllium Copper center and outer, gold plated
- Insulators: Teflon
- Crimp ferrules: Copper

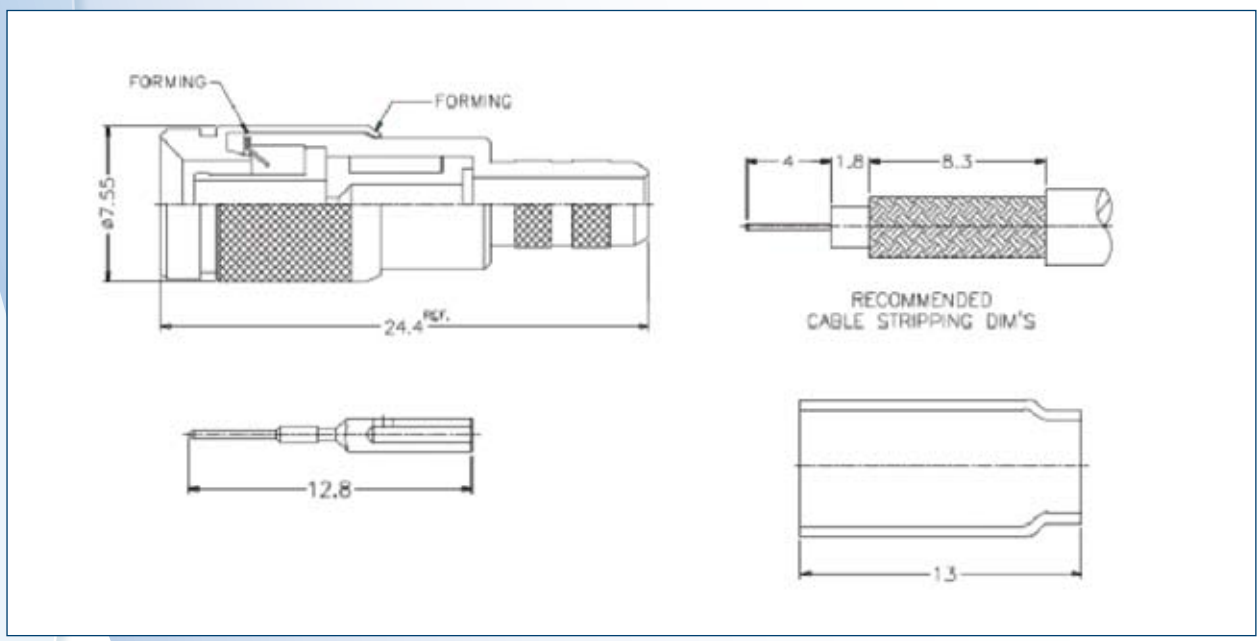

Part Numbers:

	Gender	Mount type	Connect type	Type	Manufacturing	Product group	Ace-tool
1231112D1-E16A	Male	Cable	Single crimp	R/A		16A	3
1231121D1-E16A			Double crimp	Straight		16A	3+5
1231121D1-E22			Double crimp	Straight		22	3+5
1231121D1-E20			Double crimp	Straight		20	2+6
1236412A1-E16A	Female	Rear Bulkhead	Single crimp	R/A	Machined brass	16A	3
1236412A1-E16			Single crimp	R/A	Machined brass	16	3
1236412A1-E20			Single crimp	R/A	Machined brass	20	2
1236252AF-ER2		P.C. Board	Receptacle	R/A		N/A	

1.6/5.6 SERIES

Specifications:

- Center Contact Resistance: 4 ohm
- Outer Contact Resistance: 2 ohm
- Insulation Resistance: 10,000 megaohms
- Voltage rating: 330 Volts
- Temperature Range: -40 to +155C

Materials:

- Male contact: Brass
- Female contact: Beryllium Copper center and outer, gold plated
- Insulators: Teflon
- Crimp ferrules: Copper

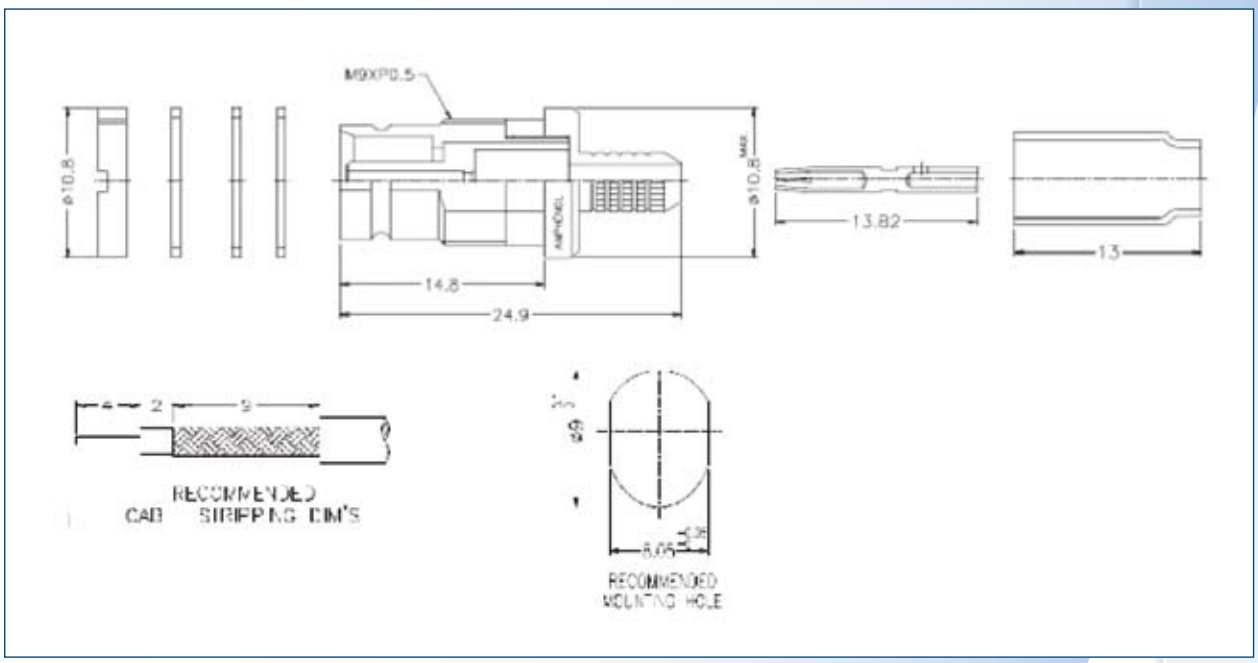

Part Numbers:

	Gender	Mount type	Connect type	Type (outline)	Manufacturing	Product group	Ace-tool
1561121AF-E20	Male	Cable	Double crimp	Straight		20	2+5
1566412A1-E16	Female	Rear Bulkhead	Single crimp	R/A	Machined brass	16	3
1566421AF-E06			Double crimp	Straight		06	1+5
1566421AF-E16A			Double crimp	Straight		16A	3+5
1566421AF-E16			Double crimp	Straight		16	3+5
1566251PF-ES1		P.C. Board	Receptacle	Straight		N/A	

SMA SERIES

Specifications:

Contact Resistance: Center: 2 mohm, Body: 2 mohm,
Braid to body: 0,5 mohm
Insulation Resistance: 5,000 megaohms
Voltage rating: RG-58, 141, 142: 500 volts peak
RG-174, 188, 316: 375 volts peak
Temperature Range: -65 to +165C

Materials:

Male contact: Brass
Female contact: Beryllium Copper , gold plated
Insulators: TFE fluorocarbon
Bodies, Coupling, Nuts: Brass per QQ-B-626

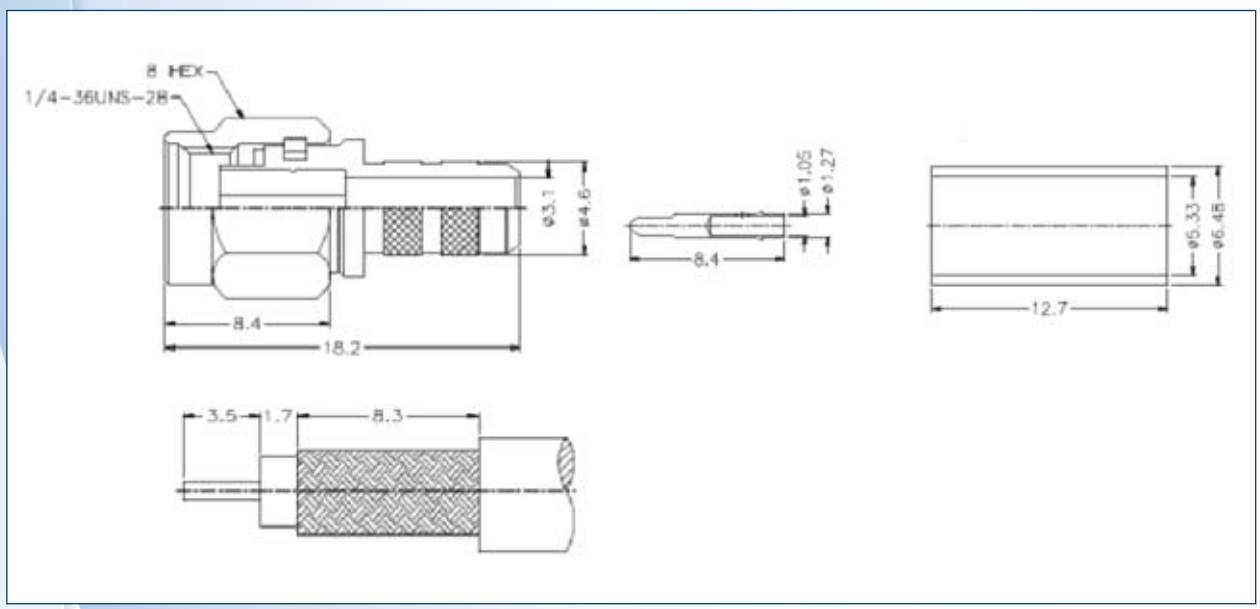

Part Numbers:

	Gender	Mount type	Connect type	Type (outline)	Manu-factering	Product group	Ace-tool
SMA1111A1-3GT50G-1A-50	Male	Cable	Single crimp	Straight		1A	3/4
SMA1111A1-3GT50G-1-50				Straight	Machined brass	1	3/4
SMA1111A2-3GT50G-5-50				Straight		5	1/2
SMA1111A6-3GT50G-7B-50				Straight		7B	4
SMA1112A3-3GT50G-14-50				R/A		14	1/2
SMA1112A5-3GT50G-5-50				R/A		5	1/2
SMA6251A1-008-3GT50G-50	Female	P.C. Board	Receptacle	Straight			
SMA6252D1-3GT50G-50				R/A			
SMA6411A4-NT50G-5-50		Rear Bulkhead	Single crimp	Straight		5	1/2
SMA6411G2-3GT50G-14-50				Straight		14	1/2
SMA6551A1-3GT50G-50		Panel	Receptacle	Straight			

SMB SERIES

Specifications:

Contact Resistance: Center: 6 mohm, Outer: 1 mohm, Braid to body: 1 mohm
Insulation Resistance: 1,000 megaohms
Voltage rating: RG-188/U Cable 335 volts at sea level and 85 volts at 70,000 feet
Temperature Range: -65 to +165C

Materials:

Center contact: Male: Brass or beryllium copper, gold plated, Female: Beryllium Copper , gold plated
Insulators: TFE
Body: Brass per QQB-626, or zinc per ASTM B86-71

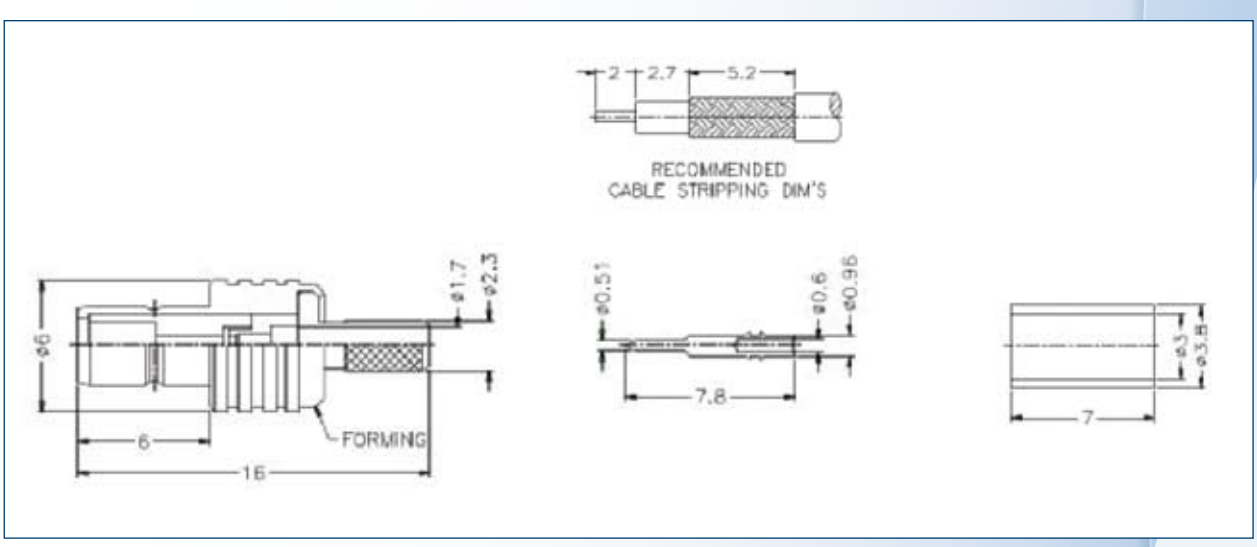

Part Numbers:

	Gender	Mount type	Connect type	Type (outline)	Manu-factering	Product group	Ace-tool
SMB1121A1-3GT30G-14-50	Male	Cable	Double crimp	Straight	Machined brass	14	1/2
SMB1121A1-3GT30G-5-50				Straight	Machined brass	5	1/2
SMB1252PF-001-3GT30G-50		P.C. Board	Receptacle	R/A			
SMB6121A1-3GT30G-14-50	Female	Cable	Double crimp	Straight	Machined brass	14	1/2
SMB6121A1-3GT30G-5-50				Straight	Machined brass	5	1/2
SMB6121AA-3GT30G-19-75				Straight		19	3
SMB6121AA-NT30G-6-75				Straight		6	3
SMB6252B1-3GT30G-50		Panel	Receptacle	R/A	DieCast		
SMB6252B1-3GT30G-75				R/A	DieCast		

TNC SERIES

Specifications:

Contact Resistance: Center: 1,5 mohm,
Outer: 0.2 mohm
Dielectric Withstanding Voltage: 1,500 volts RMS
Voltage rating: 500 volts peak
Temperature Range: -65 to +165C
VSWR: M39012 straight connectors: 1.3 max @ 0-11GHz,
M39012 right angle connectors: 1.35 max @ 0-11 GHz

Materials:

Center contact: Male: Brass or beryllium copper, gold plated, Female: Beryllium Copper , gold plated
Insulators: TFE
Body: Brass per QQB-626, or zinc per ASTM B86-71

Part Numbers:

	Gender	Mount type	Connect type	Type (outline)	Manu-factering	Product group	Ace-tool
T1112A1-ND3G-1-50	Male	Cable	Single Crimp	R/A	Machined brass	1	3/4
T1121A1-ND3G-1A-50			Double Crimp	Straight	Machined brass	1A	3/4
T1121A1-ND3G-1-50				Straight	Machined brass	1	3
T1121G1-ND3G-5-50				Straight		5	2
T6121A1-ND3G-1A-50	Female			Straight	Machined brass	1A	3/4
T6121A1-NT3G-1-50				Straight	Machined brass	1	3/4
T6251C1-NT3G-50		P.C. Board	Receptacle	Straight			
T6252H7-NPP3G-50				R/A			
T6551A1-NT3G-50		Panel		Straight	Machined brass		
T6551E1-001-NT3G-50				Straight			

AMC CONNECTORS

Specifications:

Impedance:	50 Ω
Frequency range:	DC to 6 GHz
Contact resistance:	Center: 20 mΩ max. Measured at 10mA max.
Outside:	10 mΩ max.
Outside (receptacle):	10 mΩ max.
Insulation resistance:	500 MΩ min. Measured at 100 V DC. Withstanding voltage No line or insulation breakdown 200 V AC for 1 minute
VSWR (Straight connectors):	1.3 Max. DC to 3 GHz
VSWR (Right angle):	1.4 Max. 3 to 6 GHz
Female contact holding force:	0.15N min Measured with a diameter 0.475 pin gauge
Temperature Range:	No damage, cracks, or Looseness -40°C to +90°C

Materials:

- Plug Outer Body: Silver over phosphor bronze
- Plug Insulator: PBT
- Plug Center Contact: Gold over phosphor bronze
- Jack Center/Ground Contacts: Gold over brass
- Jack Housing LCP

For detailed specifications check www.amphenolinfocom.eu

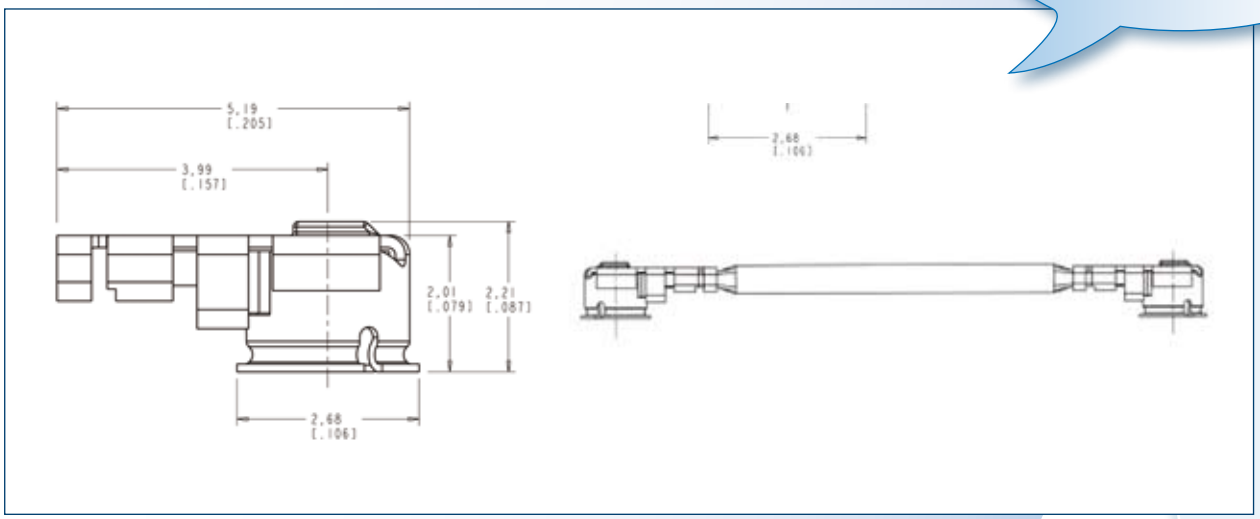

Part Numbers:

	Description	Body	Contact	Insulator	Cable Length	Color	Termination
A-1JB	Surface Mount Jack	Silver					
A-1PA-113-100B2	Right Angle Plug Jumpers	Silver	Gold	PBT	100mm	Black	2 ends
A-1PA-113-200B2	Right Angle Plug Jumpers	Silver	Gold	PBT	200mm	Black	2 ends
A-1PA-113-310B2	Right Angle Plug Jumpers	Silver	Gold	PBT	310mm	Black	2 ends

TOOLS

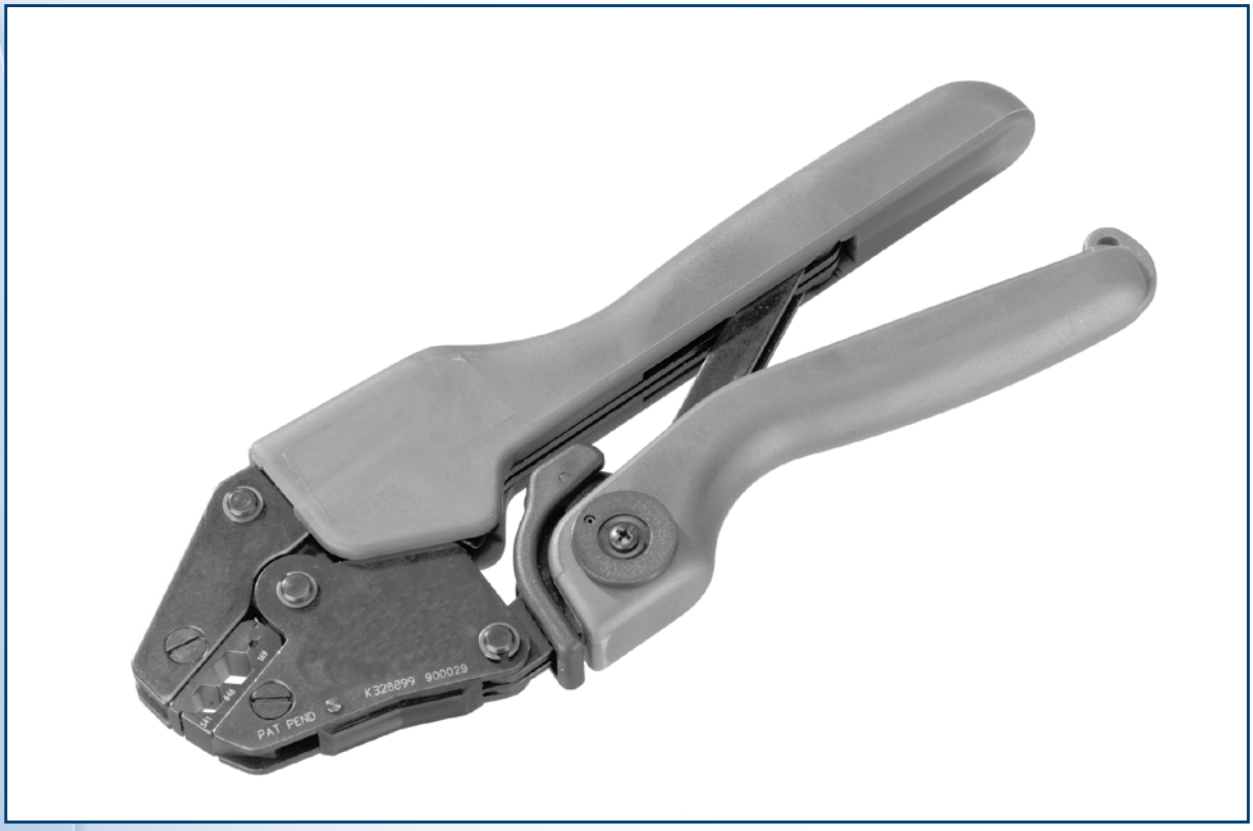

Amphenol offers full range of termination tooling to meet your special production requirements.
All tools meet the Amphenol stringent design and quality requirements. Amphenol ACE series are sold as a handle with the die set included. Amphenol's tools provide a consistent and reliable crimp each and every time, thereby insuring the integrity of the connector termination. The ACE tools are easy to operate, with low force and with one hand. The handles are ergonomical formed to insure comfortable crimping also with higher volumes.

Amphenol partnumber	Die size square mm	Die size hex mm
Ace-tool 1	0,70	2,03 2,54 2,67 3,10 3,25
Ace-tool 2	0,70	1,07 1,73 3,25 3,84
Ace-tool 3	0,70	1,07 1,73 4,52 5,41
Ace-tool 4	-	1,73 2,54 2,67 5,41 6,48
Ace-tool 5	-	1,73 8,10 8,23
Ace-tool 6	-	2,54 2,67 3,00 10,90
Ace-tool 7	1,09	1,09 4,52 6,48
Ace-tool 8	1,09 1,73	1,09 1,73 4,75 8,10
Ace-tool 9	-	1,73 3,25 4,52
Ace-tool 10	-	5,18
Ace-tool 11	-	6,81

TOOLS

Miniature Step Adjustable Crimp Tool

P.N.	Description
M22520/2-01	Hand tool
AC-POSITIONER K41	Positioner

Stripping Tool

P.N.
ACE-STRIPPING TOOL 1
ACE-STRIPPING TOOL 1 BLADE

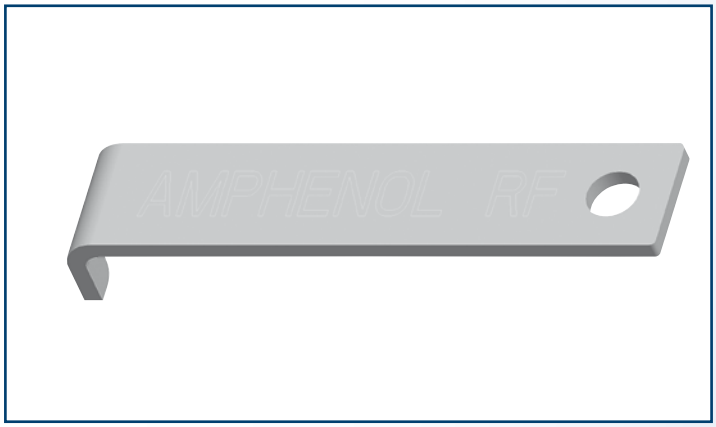

AMC Tool

P.N.
227-1483

SEARCH CABLES

Cable Applicable Cables

Group	
01	141/ 303/ 58/ 58A/ B7806A/ LMR195/ KX15/ M17-28/ L190-16/ L910-30
01A	142/ 142A/ 142B/ 223/ 400/ 55/ M17-84/ KX23
01B	B7807A/ LMR200
02	122/ 58 Plenum/ 58 Thinnet/ B88240/ B89907
03	140/ 210/ 59/ 59A/ 59B/ 62/ 62A/ M17-30/ KX30/ M17-29/ KX25/ KX52/ KX53/ KX61/ L910-12/ L910-13
03A	59-20AWG
04	59 Plenum
04A	59 Plenum-20AWG
05	174/ 188/ 188A/ 316/ B7805A/ KX3/ KX22/ M17-113/ M17-119
05A	316 Double Braided
06	179/ 179A/ 179B/ 187/ 187A/ B9221/ M17-94/ L910-22/ KX55
06A	179 Double Braided
07	213/ 393/ 8/ 8A/ KX4
07A	214/ KX13
07B	8X/ B7808A/ LMR240
07C	B7810A/ B8214/ B9913/ LMR400
07D	B89913
07E	11/11A
07F	11-14AWG/ B1859A/ B7731/ B8213/ B9292/ KX8
08	143/ 212/ 6/ KX50/ KX51/ L910-8
08A	B1694A/ B9248
08B	6 Plenum/ B1695A
09	B8227/ B89207
10	.141 semi rigid/ RG402/ KS52
11	.085 semi rigid/ 405/ KS51
12	.250 semi rigid
13	.047 semi rigid
14	178/ 178A/ 178B/ 196/ 196A
15	B8281/ B9141/ B9231
15A	B88281
16	180/ 180A/ 195/ B1855/ B1865A/ B8218/ M17-95/ L910-19/ FLEX3
16	ABT3002/ L910-34/ L910-39/ TZC75024
17	LMR600
18	AT&T734A/ B1505A
19	AT&T735A/ B735A1
20	ST212/1/ ST212/2/ 217
21	ST214/1/ ST214/2
22	FLEX 5/75
23	RA7000
24	Mini-Coax (2mm)
25	BT2003/ TR-SP109/ Suhner 2SPTT6010
26	1.13mm

SEARCH CABLE GROUP

Applicable Cables	Cable Group
.047 semi rigid	13
.085 semi rigid	11
.141 semi rigid	10
.250 semi rigid	12
1.13mm	26
6	08
6 Plenum	08B
8	07
8A	07
8X	07B
11	07E
11-14AWG	07F
11A	07E
55	01A
58	01
58 Plenum	02
58 Thinnet	02
58A	01
58C	01
59	03
59A	03
59B	03
59-20AWG	03A
59 Plenum	04
59 Plenum-20AWG	04A
62	03
62A	03
122	02
140	03
141	01
142	01A
142A	01A
142B	01A
143	08
174	05
178	14
178A	14
178B	14
179	06
179A	06
179B	06
179 Double Braided	06A
180	16
180A	16
187	06
187A	06
188	05
188A	05
195	16
196	14
196A	14
210	03
212	08
213	07
214	07A
223	01A
303	01
316	05
316 Double Braided	05A
393	07
400	01A
405	11
AT&T734A	18
AT&T735A	19
B1505A	18
B1694A	08A
B1695A	08B
B1855	16
B1859A	07F
B1865A	16
BT3002	16A
B735A1	19
B7731	07F

Applicable Cables	Cable Group
B7805A	05
B7806A	01
B7807A	01B
B7808A	07B
B7810A	07C
B8213	07F
B8214	07C
B8218	16
B8227	09
B8281	15
B88240	02
B88281	15A
B89207	09
B89907	02
B89913	07D
B9141	15
B9221	06
B9231	15
B9248	08A
B9292	07F
B9913	07C
BT3002	16
BT2003	25
FLEX3	16
FLEX 5/75	22
KS51	11
KS52	10
KX3	05
KX4	07
KX8	07F
KX13	07A
KX15	01
KX22	05
KX23	01A
KX25	03
KX30	03
KX50	08
KX51	08
KX52	03
KX53	03
KX55	06
KX61	03
L910-8	08
L910-12	03
L910-13	03
L190-16	01
L910-19	16
L910-22	06
L910-30	01
L910-34	16
LMR195	01
LMR200	01B
LMR240	07B
LMR400	07C
LMR600	17
M17-28	01
M17-29	03
M17-30	03
M17-84	01A
M17-94	06
M17-95	16
M17-113	05
M17-119	05
Mini-Coax (2mm)	24
RA7000	23
RG402	10
ST212/1	20
ST212/2	20
ST214/1	21
ST214/2	21
Suhner 2SPTT6010	25
TR-SP109	25

SPECTRA-STRIP

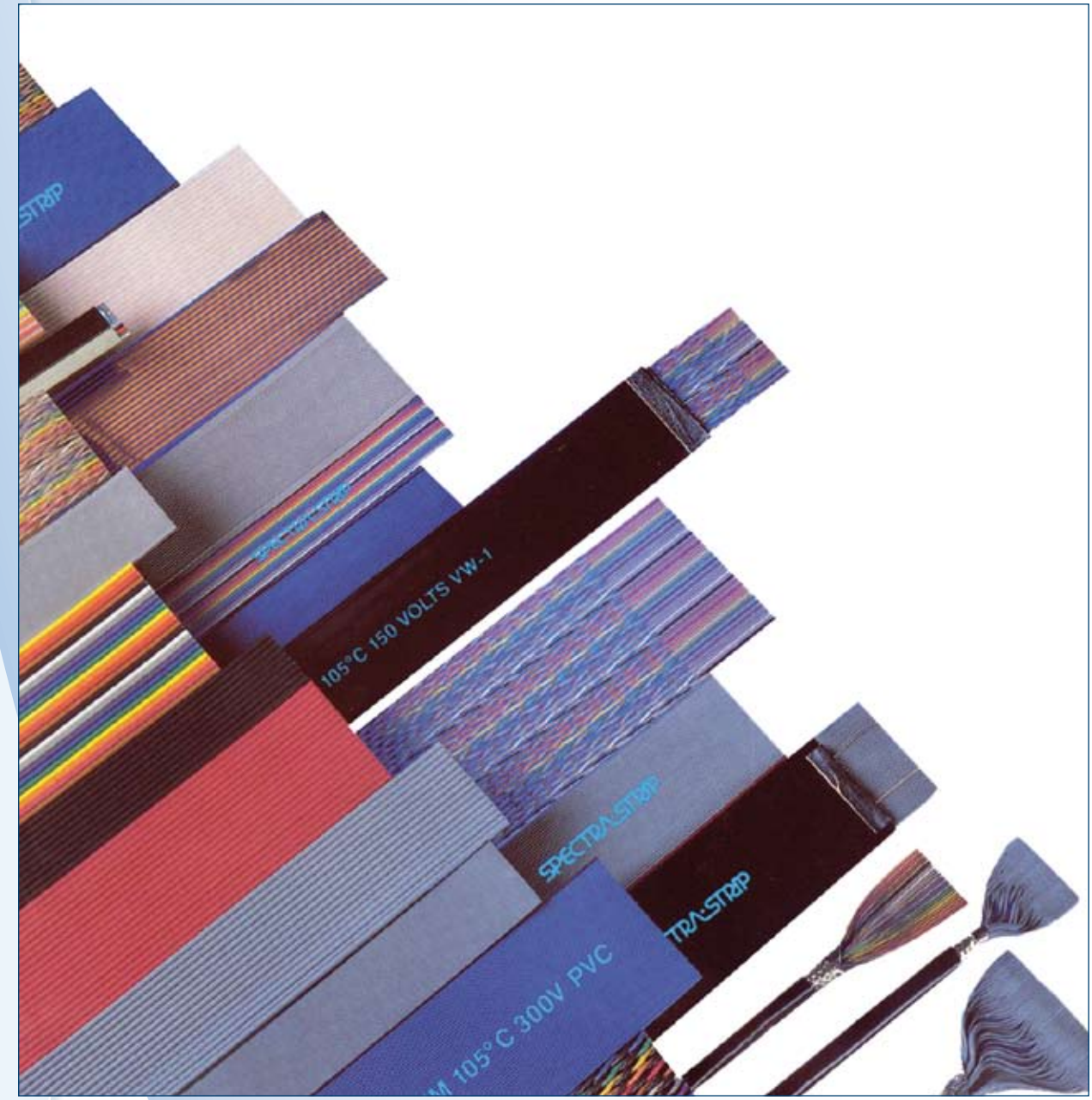

STANDARD RIBBON CABLES ROUND 'N' FLAT

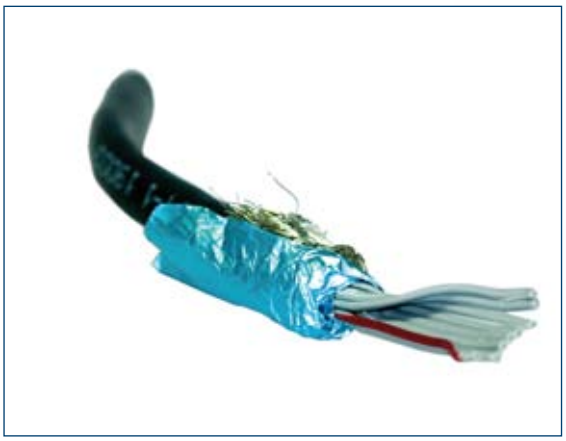

Specifications:

- Conductors: 28 AWG, 7/36 Tinned Copper
- Color code: Gray with Red Edge
- Insulation: PVC, .010" WALL
- Thickness: .035" ± .003"
- Pitch: .050" ± .003"
- Shielding: Aluminium/Polyester Foil,
- with Minimum 85% Coverage Tinned Copper Braid
- Jacket: Black PVC, .030" nom Wall
- Liner: Paper Liner Between Jacket and Braid
- Temperature Rating: -20%C to +105C (-4F to 221F)

Electrical:

- Voltage: 300 Volts
- Impedance: 75 ohms

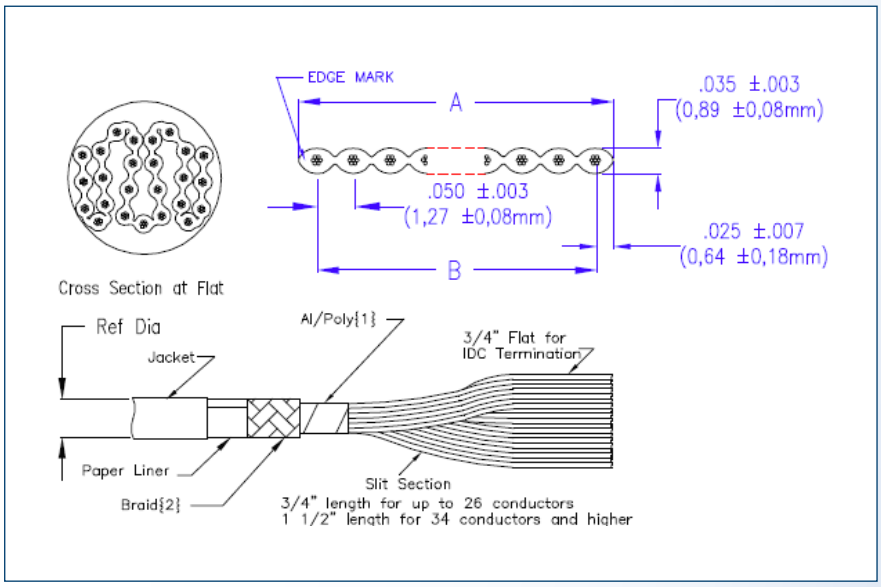

Part Numbers:

Part Number	No. Cond.	Width 'A'		Span 'B'		Ref. Dia. Inches
		Inches	(mm)	Inches	(mm)	
159-2801-009	9	.450	(11,43)	.400 ± .007	(10,16 ± 0,18)	.270
159-2801-010	10	.500	(12,70)	.450 ± .011	(11,43 ± 0,18)	.270
159-2801-015	15	.750	(19,05)	.700 ± .011	(17,78 ± 0,28)	.300
159-2801-016	16	.800	(20,32)	.750 ± .011	(19,05 ± 0,28)	.310
159-2801-020	20	1.000	(25,40)	.950 ± .011	(24,13 ± 0,28)	.330
159-2801-024	24	1.200	(30,48)	1.150 ± .011	(29,21 ± 0,28)	.350
159-2801-025	25	1.250	(31,75)	1.200 ± .011	(30,48 ± 0,28)	.360
159-2801-026	26	1.300	(33,02)	1.250 ± .011	(31,75 ± 0,28)	.360
159-2801-034	34	1.700	(43,18)	1.650 ± .011	(41,91 ± 0,28)	.400
159-2801-036	36	1.800	(45,72)	1.750 ± .015	(44,45 ± 0,38)	.410
159-2801-037	37	1.850	(47,00)	1.800 ± .015	(45,72 ± 0,38)	.410
159-2801-040	40	2.000	(50,80)	1.950 ± .015	(49,53 ± 0,38)	.430
159-2801-050	50	2.500	(63,50)	2.450 ± .015	(62,23 ± 0,38)	.480
159-2801-060	60	3.000	(76,20)	2.950 ± .015	(74,93 ± 0,38)	.520
159-2801-064	64	3.200	(81,28)	3.150 ± .015	(80,01 ± 0,38)	.530

STANDARD SPECTRA-ZIP PLANAR CABLE

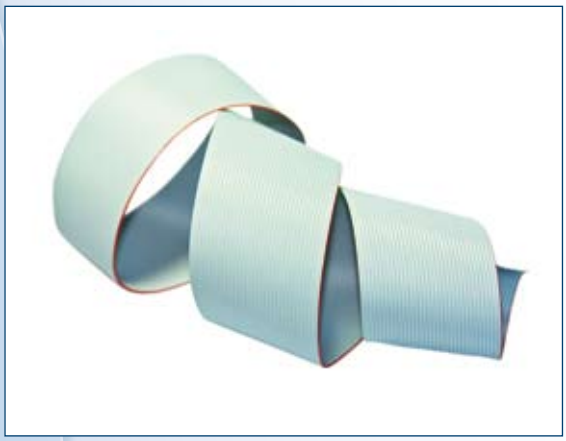

Specifications:

- Conductors rating: 28 AWG, 7/36 strand tinned copper
- Color: Gray (one edge Red)
- Conductor spacing: .050” ± .002”
- Cable thickness: .035” ± .003”
- Insulation: Gray PVC, flame retardant VW-1

Electrical:

- Voltage: 300 Volts
- Impedance: 75 ohms

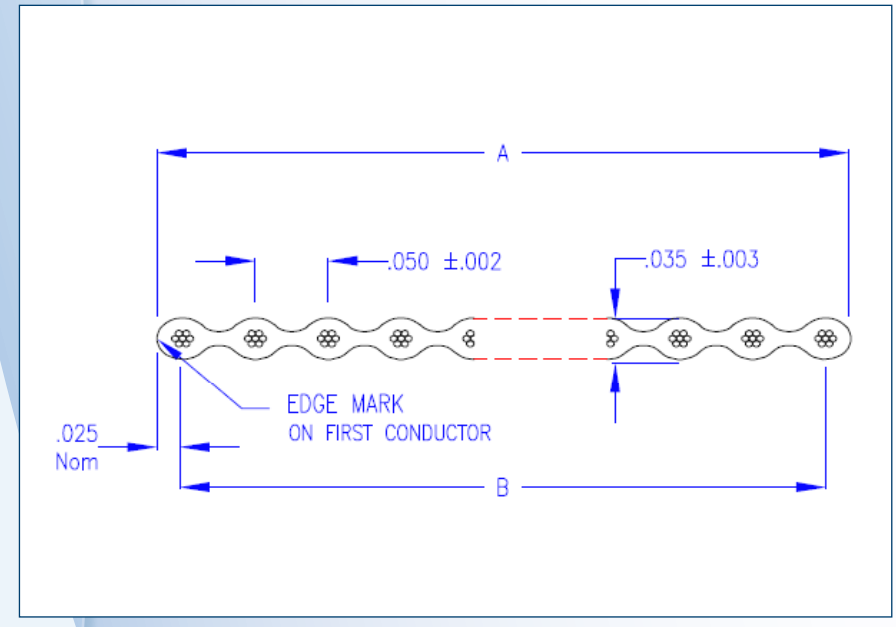

Part Numbers:

Part Number	No. Cond.	Width ‘A’		Span ‘B’	
		Inches	(mm)	Inches	(mm)
191-2801-109	9	.450	(11,43)	.400 ± .007	(11,43 ± 0,18)
191-2801-110	10	.500	(12,70)	.450 ± .007	(11,43 ± 0,18)
191-2801-114	14	.700	(17,78)	.650 ± .007	(16,51 ± 0,18)
191-2801-115	15	.750	(19,05)	.700 ± .007	(17,78 ± 0,18)
191-2801-116	16	.800	(20,32)	.750 ± .011	(19,05 ± 0,28)
191-2801-120	20	1.000	(25,40)	.950 ± .011	(24,13 ± 0,28)
191-2801-124	24	1.200	(30,48)	1.150 ± .011	(29,21 ± 0,28)
191-2801-125	25	1.250	(31,75)	1.200 ± .011	(30,48 ± 0,28)
191-2801-126	26	1.300	(33,02)	1.250 ± .011	(31,75 ± 0,28)
191-2801-134	34	1.700	(43,18)	1.650 ± .011	(41,91 ± 0,28)
191-2801-136	36	1.800	(45,72)	1.750 ± .015	(44,45 ± 0,38)
191-2801-137	37	1.850	(47,00)	1.800 ± .015	(45,72 ± 0,38)
191-2801-140	40	2.000	(50,80)	1.950 ± .015	(49,53 ± 0,38)
191-2801-150	50	2.500	(63,50)	2.450 ± .015	(62,23 ± 0,38)
191-2801-160	60	3.000	(76,20)	2.950 ± .015	(74,93 ± 0,38)
191-2801-164	64	3.200	(81,28)	3.150 ± .015	(80,01 ± 0,38)

STANDARD SPECTRA-STRIP TWIST 'N' FLAT PLANAR CABLE

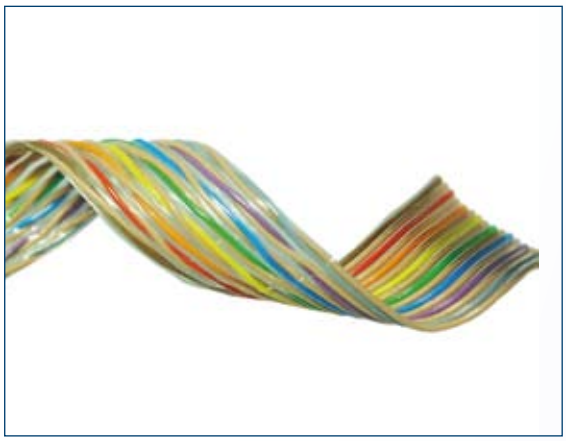

Specifications:

- Conductors rating: 28 AWG, 7/36 strand, tinned copper
- Conductor insulation: .010" nom. wall
- Color code: Brown, red, orange, yellow, green, blue, violet, gray, white, black, tan common
- Conductor spacing: Twisted pair centers: .100".; conductor centers in flats: .050" ± .005"
- Cable thickness: .042" ± .003"
- Laminate: Clear PVC, self-extinguishing

Electrical:

- Voltage rating: 300 V
- Current rating: 1 amp nom. At 10C above ambient
- Temperature rating: 80C
- Impedance: 100 ohms

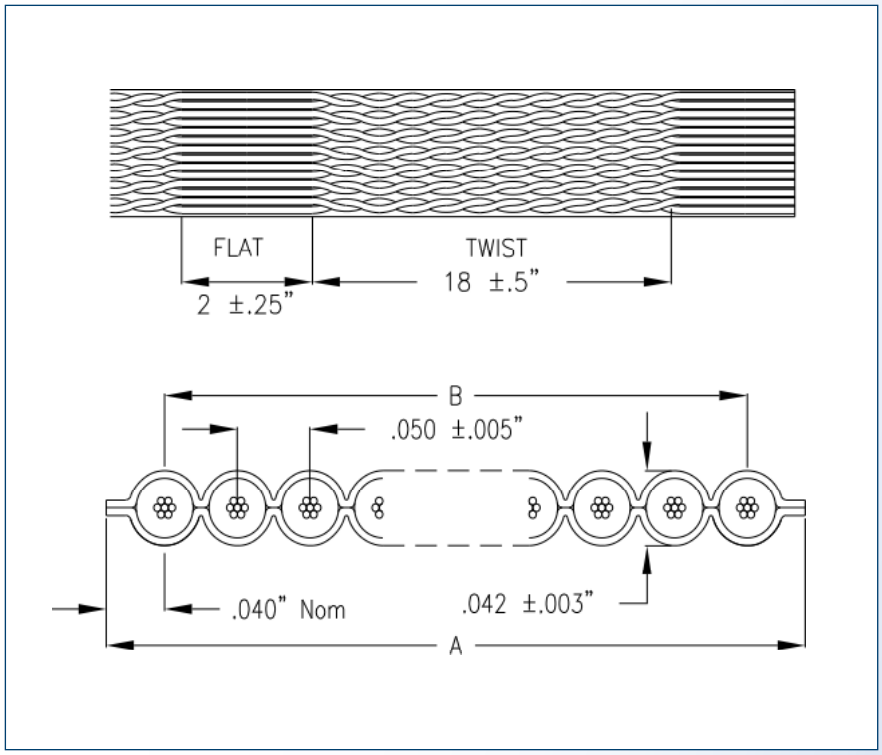

Part Numbers:

Part Number	No. Pairs.	Width 'A'		Span 'B'	
		Inches	(mm)	Inches	(mm)
132-2802-210	5	.526	(13,36)	.450 ± .015	(11,43 ± 0,38)
132-2802-214	7	.726	(18,44)	.650 ± .015	(16,51 ± 0,38)
132-2802-216	8	.826	(20,98)	.750 ± .015	(19,05 ± 0,38)
132-2802-220	10	1.026	(26,06)	.950 ± .015	(24,13 ± 0,38)
132-2802-226	13	1.326	(33,68)	1.250 ± .015	(31,75 ± 0,38)
132-2802-234	17	1.726	(43,84)	1.650 ± 015	(41,91 ± 0,38)
132-2802-236	18	1.826	(46,38)	1.750 ± .015	(44,45 ± 0,38)
132-2802-240	20	2.026	(51,46)	1.950 ± .020	(49,53 ± 0,51)
132-2802-250	25	2.526	(64,16)	2.450 ± .020	(62,23 ± 0,51)
132-2802-260	30	3.026	(76,86)	2.950 ± .020	(74,93 ± 0,51)
132-2802-264	32	3.226	(81,94)	3.150 ± .025	(80,01 ± 0,64)

STANDARD SPECTRA-STRIP 3C COLOR CODED

Specifications:

- Conductors rating: 28 AWG, 7/36 strand, tinned copper
- Color code: Brown, red, orange, yellow, green, blue, violet, gray, white, black,
- Conductor spacing: Twisted pair centers: .100".; conductor centers in flats: .050" ± .005"
- Cable thickness: .042" ± .003"
- Laminate: Clear PVC, self-extinguishing

Electrical:

- Voltage rating: 300 V
- Current rating: 1 amp nom. At 10C above ambient
- Temperature rating: 80C standard 105C consult factory
- Impedance: 105 ohms nominal

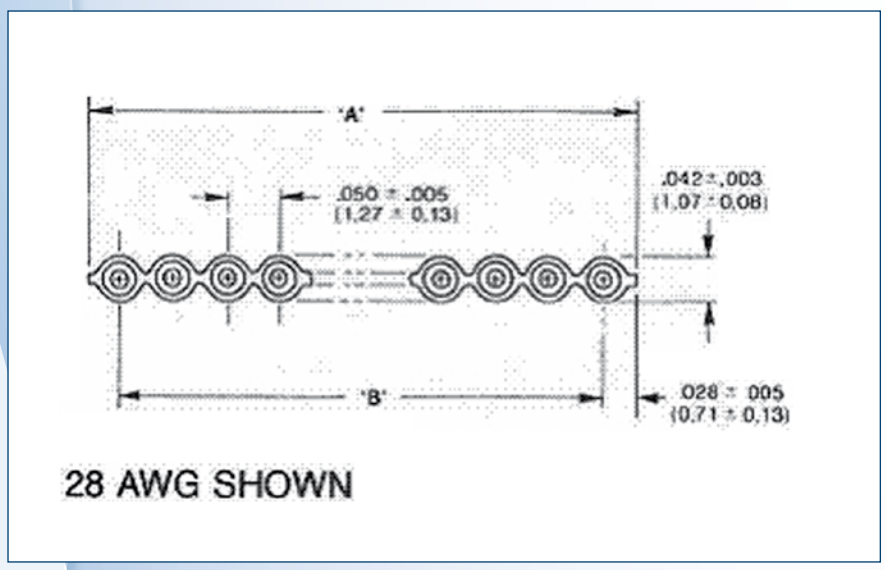

Part Numbers:

Part Number	No. Pairs.	Width 'A'		Span 'B'	
		Inches	(mm)	Inches	(mm)
135-2802-310	10	.505	(12,83)	.450 ± .015	(11,43 ± 0,38)
135-2802-314	14	.705	(17,91)	.650 ± .015	(16,51 ± 0,38)
135-2802-316	16	.805	(20,45)	.750 ± .015	(19,05 ± 0,38)
135-2802-320	20	1.005	(25,53)	.950 ± .015	(24,13 ± 0,38)
135-2802-324	24	1.205	(30,61)	1.150 ± .015	(29,21 ± 0,38)
135-2802-325	25	1.255	(31,88)	1.200 ± .015	(30,48 ± 0,38)
135-2802-326	26	1.305	(33,15)	1.250 ± .015	(31,75 ± 0,38)
135-2802-334	34	1.705	(43,31)	1.650 ± 015	(41,91 ± 0,38)
135-2802-336	36	1.805	(45,85)	1.750 ± .015	(44,45 ± 0,38)
135-2802-337	37	1.855	(47,12)	1.800 ± .015	(45,72 ± 0,38)
135-2802-340	40	2.005	(50,93)	1.950 ± .020	(49,53 ± 0,51)
135-2802-350	50	2.505	(63,63)	2.450 ± .020	(62,23 ± 0,51)
135-2802-360	60	3.005	(76,33)	2.950 ± .020	(74,93 ± 0,51)
135-2802-364	64	3.205	(81,41)	3.205 ± .020	(80,01 ± 0,51)

ANTENNAS

ANTENNAS

Part number : SAACA200001				
Antenna type	Qual band antenna			
Interface Type	Male SMA connector			
Frequency Band	824-894MHz / 880-960 MHz / 1710 – 1880 MHz / 1850-1990MHz			
	CDMA	EGSM	DCS	PCS
Frequency	824-894MHz	880-960MHz	1710-1880MHz	1850-1990MHz
VSWR	<3:1	<3:1	<3:1	<3:1
Efficiency	51%-67%	54%-67%	63%-80%	78%83%

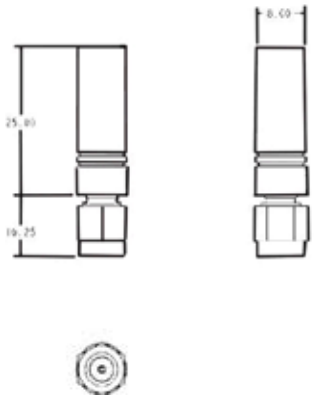

Part number : SAACA200004					
Antenna type	Internal monopole antenna				
Interface Type	Screw-in, spring contact				
Frequency Band	GSM/DCS				
Material	Flexfoil radiator with plastic carrier				
Frequency		GSM		DCS	
		880MHz	960MHz	1710MHz	1880MHz
VSWR	Open	<2.5	<3.5	<2.5	<3.0
	Closed	<3.0	<3.5	<3.0	<3.5
Efficiency	Open	>45%	>35%	>45%	>35%
	Closed	>35%	>30%	>40%	>30%

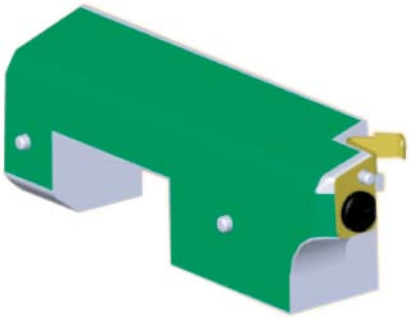

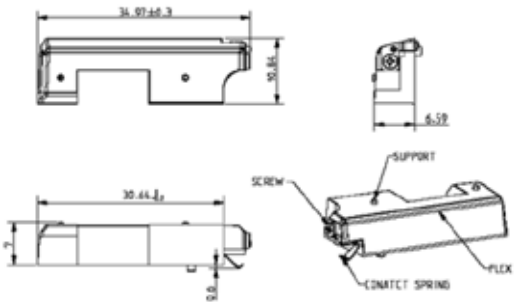

ANTENNAS

Part number : SAACA200018					
Antenna type	Stubby antenna for mobile phone				
Interface Type	Snap-in / Screw-in, spring contact				
Frequency Band	GSM/DCS				
Material	Painted plastic cover with stamping contact				
Frequency		GSM		DCS	
		880MHz	960MHz	1710MHz	1880MHz
VSWR	Open	<2.5	<2.5	<2.0	<2.0
	Closed	<2.8	<2.5	<2.0	<2.0
Efficiency	Open	>45%	>45%	>45%	>45%
	Closed	>35%	>45%	>40%	>45%

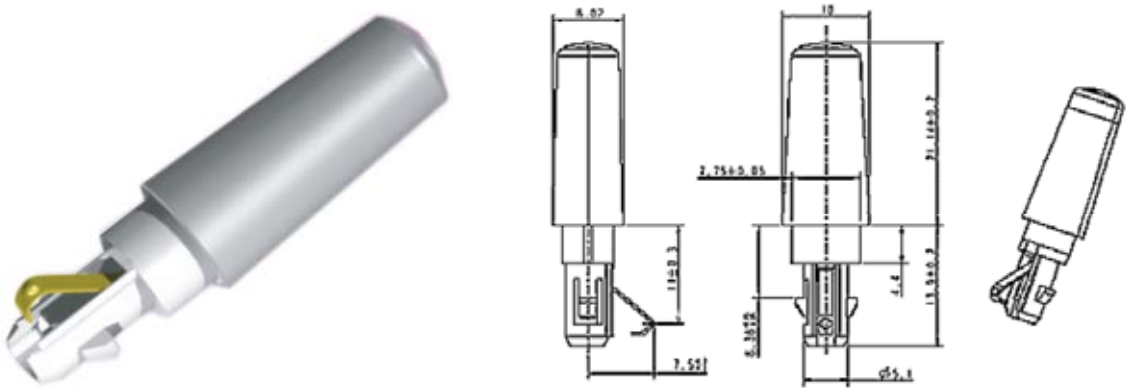

Part number : SAACA200019					
Antenna type	Stubby antenna for mobile phone				
Interface Type	Snap-in / Screw-in				
Frequency Band	GSM / DCS / WCDMA				
Material	Plastic cover with plated cap				
VSWR	Open	Closed	Average gain	Open	Closed
GSM	<3.0:1	<3.0:1	GSM	>-4.6dBi	>-2.0dBi
DCS	<3.2:1	<3.5:1	DCS	>-3.5dBi	>-4.0dBi
WCDMA	<3.0:1	<3.0:1	WCDMA	>-4.5dBi	>-3.5dBi

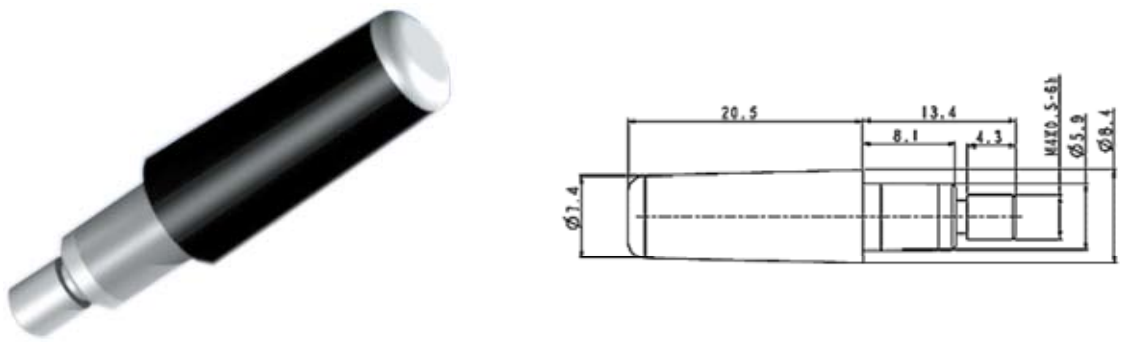

ANTENNAS

Part number : SAACA200020					
Antenna type	Terminal antenna with coaxial joint and SMA-J connector				
Interface Type	SMA-Male connector				
Frequency Band	2400-2500				
Electrical specifications	Frequencies (MHz)	Polarization	VSWR	Input Impedance	Gain
	2400-2500	vertical	<1.5	50ohm	>-2.0dBi
Mechanical specifications	Height	Weight	Radome material	Antenna color	Working temperature
	110mm	<3.0:1	Plastic	Black	

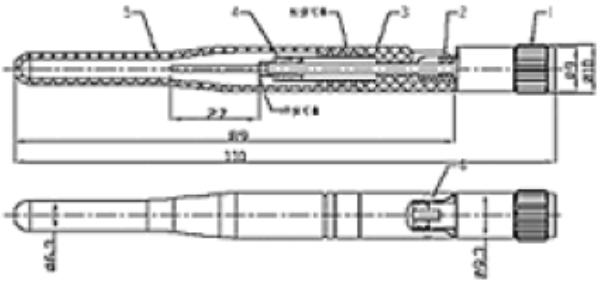

Part number : SAACA200022			
Antenna type	Retractable antenna for PHS handset		
Interface Type	Snap-in/Screw-in		
Frequency Band	PHS		
Material	Plastic cover, plated cap		
		824-849MHz	869-894MHz
VSWR	Retracted	<3.0:1	<3.0:1
	Extended	<2.0:1	<2.0:1
Efficiency	Retracted	40%	40%
	Extended	60%	60%

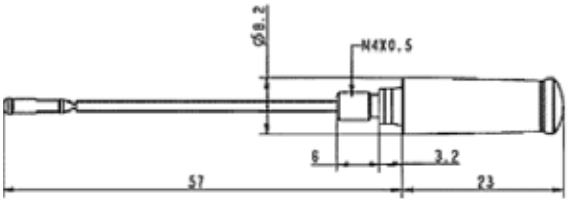

ANTENNAS

Part number : SAACA200025			
Antenna type	Qual band GSM and active GPS antenna module		
Connector Type	SMA connector lead out		
Frequency Band	824-960MHz / 1575 MHz / 1710-1990 MHz		
Material	Plastic cover with cable		
Mount Type	Glue		
Cable Type	RG174		
Cable Length	1, 3, 5m		
Polarization	RHCP	Antenna gain (peak)	Min 4 dBic
VSWR	Max 2.3	Isolation with dual band antenna	Max -20 dB
Amplifier gain (w/o cable)	~27 dB	DC Voltage	3 - 5 V
Noise figure	~1.5 dB		

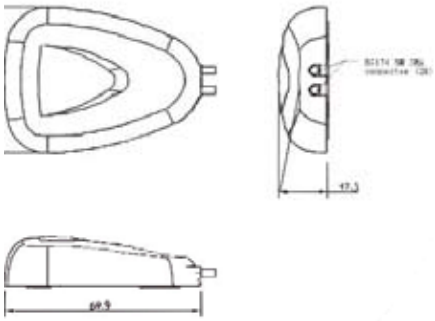

Part number : SAACA200033				
Antenna type	Carkit antenna with cable and SMA-Male connector			
Interface Type	SMA-Male connector			
Frequency Band	890-960MHz / 1710-1880MHz			
Frequencies (MHz)	Polarization	VSWR	Input Impedance	Gain
890-960MHz / 1710-1880MHz	Vertical	<2.0	50ohm	>-5.0dBi

CABLE ASSEMBLIES

FIBRE CHANNEL

Fibre Channel, or FC is a Gigabit-Speed network technology primarily used for Storage Area Networking (SAN). FC signalling can run on both twisted pair copper wire and fiber-optics.

Fibre Channel Copper Assembly:

SFP / SFP+

Amphenol SFP cable assemblies are a high performance, cost effective I/O solution for 10Gb Fibre Channel applications. SFP+ copper assemblies allow hardware manufacturers to achieve high port density, configurability and utilization at a very low cost and reduced power budget.
Continuing to advance the SFP technology, Amphenol has developed a fully featured low cost alternative to multi-mode optical SFP+ assemblies. Our optical alternative uses copper assemblies with incorporated features such as TX disable and loss of signal. Utilizing this cable solution will be transparent to the system as it behaves as though it is optical. Another benefit in addition to the price point is the significant reduction in power consumption as our units use 250 mW vs 500 mW seen on most optical modules.

Key Features:

- Compliant with Optical ports
- Improved Pluggable Formfactor (IPF) compliant for enhanced EMI/EMC performance.
- Support for 1x, 2x, 4x and 8x Fibre Channel data rates.
- I/O connector designed for high speed differential signal applications
- Low crosstalk
- Low power consumption
- EMI shield spring for reduced EMI
- Wide temperature range
- Data rates up to 4.25 Gb/s for SFP and 11.3 Gb/s for SFP+
- Push to release latch
- Compliant to SFP and SFP+ MSA

Applications:

- Storage Area Networks, Network Attached Storage and Storage Servers
- Switched fabric I/O such as ultra high bandwidth switches and routers
- Telecomm transport to metro or enterprise hand-off and transport to switching i/f
- Data centre cabling infrastructure
- High density connections between networking equipment

SFP+ “LITE”

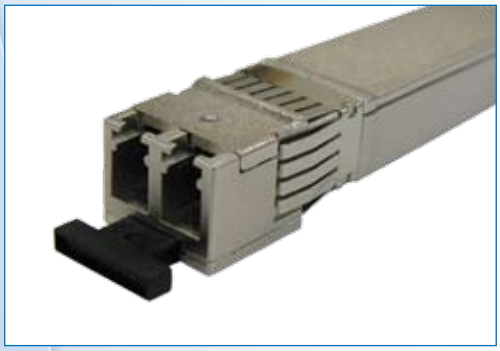

Amphenol SFP+ Optical Transceivers are a high performance, high density, low cost solution for 10Gb Ethernet and Fibre Channel applications. These transceivers are multi-rate devices allowing for a wider range of applications and backward compatibility to legacy Fibre Channel specifications.
The transceivers feature a high reliability 850nm vertical-cavity surface - emitting laser (VCSEL) allowing for flexible link distances up to 200m. The module supports the latest Improved Pluggable Formfactor specification for improved EMI performance.

Interface

- 20 pin board-as-connector
- Duplex-LC Optical connector

Cable Options

- OM2, OM3

Key Features

- I/O Connector designed for high speed differential signal applications
- Improved Pluggable FormFactor (IPF) compliant for enhanced EMI/EMC performance
- Data rates up to 11.3Gb/s, backward compatible to 1Gb/s
- Support for 1x, 2x, 4x and 8x Fibre Channel data rates
- Link Distances up to 200m (OM3), 50m (OM2)
- High reliability and Low Power consumption
- Push-to-release latch mechanism
- Compliant to SFP+, SFF-8431

Applications

- High capacity I/O in Storage Area Networks, Network Attached Storage and Storage Servers
- Switched fabric I/O such as ultra high bandwidth switches and routers
- Data center cabling infrastructure
- High density connections between networking equipment

QSFP

Amphenol QSFP copper cable assemblies are high performance, cost effective interconnect solutions supporting Ethernet, Fiber Channel, InfiniBand, SAS and SONET/SDH applications. QSFP copper modules provide a high density, high bandwidth solution at very low cost and reduced power budget. Amphenol's high speed cable assemblies meet and exceed industry standards for performance and reliability.

Interface:

- 38 position board- as connector

Cable Options:

- 8-pair 26-30AWG
- Amphenol Spectra-Strip SkewClear®
- Amphenol Spectra-Strip SkewClear®EXD

Key Features:

- Four channels transmit and receive
- 100Mb/s to 10Gb/s per channel capacity
- Copper link length up to 20m
- 3x Port density over SFP
- Precision process control for minimization of Pair- to-pair skew
- Low crosstalk
- Pull-to-release latch
- Compliant to QSFP MSA

Applications:

- Fibre Channel
- Infiniband, DDR, QDR
- 10/40Gb Ethernet
- Switches, Routers and HBA's
- Enterprise Data Center
- High Performance Computing(HPC) and Storage

Complimentary

- QSFP limiting amplified copper Cables

Products:

- QSFP short range optical modules

SERIAL ATTACHED SCSI (SAS)

External 4x SAS and external 4i Mini-SAS

Amphenol's High Speed SAS and Mini-SAS Assemblies are ultra-high performance, cost effective solutions for high speed serial buses supporting SAS architecture. Both versions of the assemblies meet and exceed SAS-2 standards and requirements.

Key Features:

- Compliant to SAS-2 Specifications
- I/O connector designed for high speed differential signal applications
- 4x Axial SkewClear® 8 Pair cable. Optional EXD.
- Low insertion loss and crosstalk
- Matched impedance
- High precision control and minimization of in-pair and pair to pair skew
- Connector the same as 4X InfiniBand
- Data rate up to 3.0Gb/s guaranteed
- Length 0.5 to 6 meters
- Mating durability up to 250 cycles.

Applications:

- Data Storage and high capacity I/O in Storage Area Networks and Network Attached Storage
- Server Storage Systems
- Small to medium business storage
- High end enterprise storage

SAS / SATA

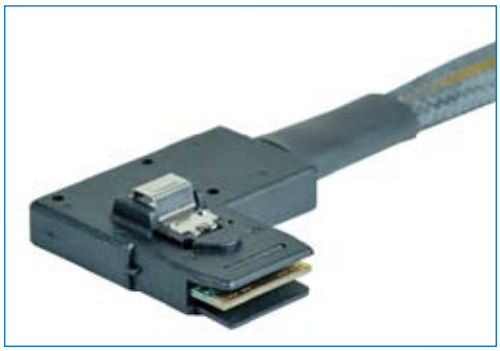

Internal Mini-SAS

Amphenol offers one of the broadest product lines to support the emerging markets for SAS and SATA applications. The need for multiple Hard Disk Drives in a serial bus application requires an interconnect capable of handling multiple lanes of data.
The Mini Multilane interconnect system supports 4 lanes of Data and 8 Sideband signals (for system management such as I2C or LED's) in one connector.

Features:

- Foil in cable construction provides improved EMI.
- 10ps/m in pair skew and max 6db/m of attenuation at 4.5 GHz
- end-to-end interfaces signal integrity and performance at 3.0Gb/s and lane.
- Thinner and more flexible cable, allowing for more efficient routing.
- Straight, right angled and side exit configurations.
- Fan out assemblies to SATA & SAS

SAS

Amphenol is an active member of the Serial Attached SCSI (SAS) Standard (T10/SFF) working group and offers the broadest product lines of SAS.
SAS was developed to address anticipated I/O and direct attach storage requirements. It provides universal interconnect with SATA, while offering logical SCSI compatibility along with SCSI reliability, performance and manageability. SAS is a point-to-point architecture, distinct from parallel technologies such as Fiber Channel and SCSI. A point-to-point architecture establishes a link directly from the controller to a disk drive or through an expander switching matrix. SAS complements SATA by adding dual porting, full duplex, device addressing and it offers high reliability, performance and data availability services, as well as logical SCSI compatibility, SAS customers can choose to deploy cost-effective SATA drives in a SAS storage environment.

Features:

- Straight, right angled and side exit over-molded assemblies.
- 26 and 30 AWG cable available.
- Unified data and power assembly.

SAS / SATA

SATA

Serial ATA is the proactive evolution of the ATA interface from a parallel bus to a serial bus architecture. This architecture overcomes the electrical constraints that are increasing the difficulty of continued speed enhancements for the classic parallel ATA bus.

Features:

- Straight, right angled and reverse right angled cable exits.
- Crossover cable.
- Combo data & power assembly.
- Latched version available

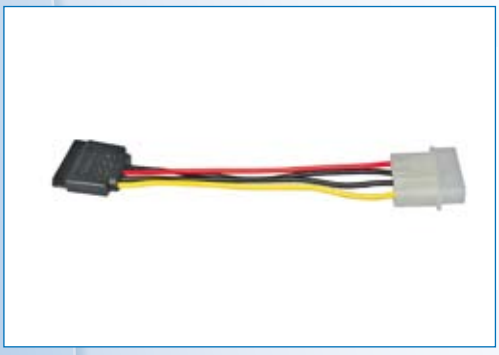

Slimline SATA

Slimline SATA has been especially designed for slimline optical disk drives in notebooks, desktops and servers. Slimline SATA connectors and cable assemblies are more compact than common SATA, and can therefore be applied to a smaller space.

eSATA

Amphenol eSATA provides higher speed and better connection for external storage solutions in computer and consumer applications. eSATA 3Gb/s speed is much higher than that of USB and IEEE1394.

Power SATA

Power SATA cable assemblies are a version of SATA cable assemblies used to provide HDD's or optical drives with power from the power modules of end devices such as Desktops, Notebooks, Servers, Networks and RAID Storages, STB's. Game machines etc. Power SATA cable assemblies can supply power for several HDD's at the same time.

HDMI / DVI / DISPLAYPORT
FIREWIRE / USB

HDMI

HDMI (High Definition Multimedia Interface) is a compact audio/video connector interface used to transmit uncompressed digital streams. HDMI connects digital audio/video sources such as set-top boxes, personal computers, video game consoles, and AV receivers to compatible digital audio devices, video monitors, and digital televisions. HDMI is a 19 or 29 position interface utilizing a connector which is significantly more robust than today's SCART, and by utilizing an inline equalizer, HDMI cable lengths can be extended to over 10m. As an adopter of HDMI licensing, LLC, Amphenol HDMI cables have passed all of the required compliance tests.

Key Features:

- 10 Gb/s allowing uncompressed digital video at up to 1080 lines progressive scan, with multi channel audio and control signals.
- Various DVI to HDMI and HDMI to DVI convertors are available allowing products utilizing both standards to work together.
- Full shield coverage protects against harmful EMI / RFI interference.

DVI

The Digital Visual Interface (DVI) is a video interface standard designed to maximize the visual quality of digital display devices such as flat panel LCD computer displays and digital projectors. It was developed by an industry consortium, the Digital Display Working Group (DDWG). It is designed for carrying uncompressed digital video data to a display. It is partially compatible with the High-Definition Multimedia Interface (HDMI) standard in digital mode (DVI-D).

DVI is the only widespread video standard that includes analog and digital transmission options in the same connector.

DisplayPort

DisplayPort is an industry standard developed to accommodate the growing broad adoption of digital display technology within the PC and Consumer Electronics industries. Display Port is intended to be used primarily between a computer and its display monitor, or a computer and a home-theater system. It consolidates internal and external connection methods to reduce device complexity, and enables the next generation of displays to feature higher color depths, refresh rates and display resolution.

Key Features:

- Higher performance than dual link DVI, with a total data rate of 10.8 Gb/s
- Embedded clock.
- Enables support for DVI and HDMI via a simple adaptor.
- Auxiliary channel (1 Mb/s), enables new user features, VOIP, game control and camera video.
- Max 3m cable length at 2.7 GHz, max 15m cable length at 1.62 GHz.

HDMI / DVI / DISPLAYPORT
FIREWIRE / USB

FIREWIRE

IEEE1394 (also known as Firewire or iLINK), is a standard interface for high speed data transmission, such as from consumer electronics devices to computers. IEEE1394 products can carry a dense multimedia data stream between devices at a maximum speed of 1600Mb/s.

Key features:

- Supports synchronous and asynchronous data transfer.
- Support hot plug / plug and play.

USB

USB can be used to connect to a vast array of peripheral devices such as mouse, keyboards, printers, scanners, storage equipment etc. It supports plug and play and hot plug for easy use.

Mini-USB

Mini-USB has become a popular interface for exchanging data between PC's and smaller peripherals such as mobile phones, digital cameras and MP3 players . Amphenol USB cables are USB 2.0 compliant with a transfer rate of up to 480Mb/s. They also support OTG (On The Go), function that enables two portable peripherals to transmit data directly, without having to go through a PC.

Micro-USB

With the continued reduction in size of our PDA's, Mobile Phones, Digital Camera's etc… there is a corresponding need to reduce interconnect sizes, hence the Micro-USB is the latest development in the USB standard.
Amphenol's Micro-USB cable assemblies offer increased durability of 10000 mating cyles, and data rates over 480 Mb/s.

MODULAR PATCH CORDS

High speed access and reliability are essential in today's work environment. For this reason Amphenol manufactures a complete portfolio of modular patch cables known as Cat5, Cat5E and Cat6. We use shielded, unshielded or plenum cable for our cords and can be terminated with either RJ11 or RJ45 connectors. Whether you need a standard or build to spec design Amphenol's extensive product line is designed to meet your exact needs.
Of course all cables are tested in accordance with the performance standards as internationally defined.

STANDARD FLATCABLE ASSEMBLIES

Amphenol flat cables can be used in many applications and the variety is almost endless. We support all common standard cables from pitch 0,5 mm up to 2,54 mm and custom cables can be made on demand through Amphenol Spectra Strip. The parallel flat cable can transmit multilane signal simultaneously.

At Amphenol we have the capability to design and manufacture all of your flat ribbon cable assembly requirements.

Cables

- .025 and .050 pitch
- LVD SCSI Twist and Flat
- PVC, TPE and Teflon
- PVC and TPE Slit
- PVC Loose Twist and Flat

FIBRE CHANNEL

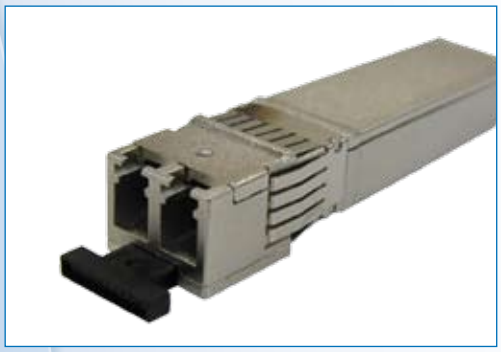

Fibre Channel Optical Module

SFP+

Amphenol SFP+ Optical Transceivers are a high performance, high density, low cost solution for 10Gb Ethernet and Fibre Channel applications. These transceivers are multi-rate devices allowing for a wider range of applications and backward compatibility to legacy Fibre Channel specifications. The transceivers feature a high reliability 850 nm vertical-cavity surface-emitting laser (VCSEL) allowing for flexible link distances up to 300 meter.
The module supports the latest Improved Pluggable FormFactor (IPF) specification for improved EMI performance.

Key Features:

- I/O connector designed for high speed differential signal applications
- Improved Pluggable FormFactor (IPF) compliant for enhanced EMI/EMC performance
- Data rates up to 11,3Gb/s, backward compatible to 1Gb/s
- Support for 1x, 2x, 4x and 8x Fibre Channel data rates
- Link distances up to 300 meter
- High reliability and Low Power Consumption
- Push-to-release latch mechanism
- Compliant to SFP+, SFF-8431

Applications:

- High capacity I/O in Storage Are Networks, Network Attached Storage and Storage Servers
- Switched fabric I/O such as ultra high bandwidth switches and routers
- Data centre cabling infrastructure
- High density connections between networking equipment

Additional Fibre Channel Products

Amphenol also offer the following cable assemblies that are commonly used in Fibre Channel networks:

- HSSDC
- HSSDC2
- QSFP

INFINIBAND / LOW SKEW CABLE ASSEMBLIES

Amphenol InfiniBand High Speed Assemblies are ultra-high performance, cost-effective solutions for Gigabit speed applications in data and switched fabric I/O, switches, routers and computer clusters. Available in 4 and 12 channel versions, they exceed Infiniband standard requirements and have been tested to perform in Double Data Rate (DDR) Infiniband and 10GBASE-CX4 applications.

Key Features:

- Compliant to IBTA InfiniBand Architecture Specifications
- I/O connector defined for high speed differential signal applications
- Low insertion loss and low crosstalk
- Matched impedance (100 ohms as per standard or 150 ohms for custom applications)
- High precision control and minimization of in-pair and pair to pair skew
- Adopted by the Infiniband Architecture Specifications the 4x and 12x I/O interface
- Data rates up to 5 Gb/s guaranteed
- Protocol-specific keying
- Cable options include Skewclear and Eye Opener Plus

Standards Supported:

- InfiniBand 4X, 12X
- InfiniBand IBTA Volume 2 Release 1.2

Connector Standards:

- SFF-8470

Applications:

- Switched fabric I/O such as ultra high bandwidth switches and routers
- High Data rate low latency I/O such as clusters and supercomputers with parallel processing
- Data Storage and high capacity I/O in Storage Area Networks and Network Attached Storage
- Data Center cabling infrastructure
- High density connections between networking equipment

Serial Speed:

Designed for high speed I/O and high performance processing systems used in routers and computer clusters.

- InfiniBand 2.5Gb/s (IB)
- InfiniBand 5.0Gb/s (IB-5G, IB-x2, IB-DDR)

MODULAR PATCH CORDS

High speed access and reliability are essential in today's work environment. For this reason Amphenol manufactures a complete portfolio of modular patch cables known as Cat5, Cat5E and Cat6. We use shielded, unshielded or plenum cable for our cords and can be terminated with either RJ11 or RJ45 connectors. Whether you need a standard or build to spec design Amphenol's extensive product line is designed to meet your exact needs.
Of course all cables are tested in accordance with the performance standards as internationally defined.

FLEXIBLE – AND SEMI – RIGID RF CABLE ASSEMBLIES

Amphenol is the global leader in manufacturing RF connectors for a variety of applications in many industries. Known for it's superior quality and design we support the Wireless Infrastructure market, Wire-line market, Instrumentation, Medical and many others with low-cost, build-to-spec RF cable assemblies with flexible-, corrugated- and rigid cable.

We use 7/16, QN and N power connectors as well as medium and small form factor connectors like I.e. BNC, TNC, SMA, SMB, QMA, MCX, MMCX and many others.

Complete test results with IMD, Return Loss etc. are common for our high class RF assemblies.

FIBRE OPTICS

At Amphenol we have over 30 years experience of providing Fibre Optic Interconnect Solutions. We offer products for all applications and our expertise includes connectors, cable assemblies, couplers, attenuators and fibre management systems.

Amphenol can offer a single source for all your fibre optic needs and support is available from all over the world including Europe.

Telecom: The telecom networks depend on Fibre Optics and Amphenol can support the industry with high precision and performance product to both the OEM suppliers and the carriers or service providers across the world.

As data rates increase Amphenol Fibre Optic Products are found in Switching Systems, Transport Networks, Cellular, Wi-Max systems and FTTH programs.

Datacom: As suppliers to industry leading companies in this market, Amphenol can provide all aspects of the cabling systems needed for LAN and data center networks.

Medical: More and more medical procedures require the precise delivery of high power laser energy. Amphenol have been at the forefront of this technology from its inception. Many of the major OEM's rely on our precision products for outstanding power delivery.

Industrial: Fibre Optic Interconnect Products are present in many and varied applications in the industrial environment where it's immunity from EMC and the lack of EMI combines with its light weight to offer significant advantages. Amphenol products are used in Rail Transport, Harsh Environment Data Communications, Energy Generation, Oil and Gas exploration and Military and Aerospace communications.

Products

Connectors: SMA, ST, FC, SC, LC, LX.5, Indoor/Outdoor Fiber Optic and PT-LC.

Cable Assemblies: single and multi mode, simplex, duplex or ribbon fibre

Couplers: 1x2, 2x2, WDM all package styles available.

Attenuators: Plug in style, in line.

PART NUMBER INDEX

Part Number	Page number
101-00112-68	97
101-00139-64	97
101-00139-68	97
101-00139-69	97
101-00140-64	96
101-00140-68	96
101-00140-69	96
101-00178-68	96
101-00205-64	96
101-00205-68	96
101-00205-69	96
101-00240-64	97
101-00240-68	97
101-00240-69	97
101-00265-64	96
101-00265-68	96
101-00265-69	96
101-00269-64	99
101-00269-68	99
101-00269-69	99
101-00270-64	99
101-00270-68	99
101-00270-69	99
101-00271-64	99
101-00271-68	99
101-00271-69	99
101-00272-64	99
101-00272-68	99
101-00272-69	99
101-00294-68	98
101-00295-64	100
101-00295-68	100
101-00295-69	100
101-00303-68	97
101-00306-64	99
101-00306-68	99
101-00306-69	99
101-00309-64	99
101-00309-68	99
101-00309-69	99
101-00313-64	95
101-00313-68	95
101-00313-69	95
101-00349-64	97
101-00349-68	97
101-00349-69	97
101-00356-64	101
101-00356-68	101
101-00356-69	101
101-00359-68	98
101-00364-64	99
101-00364-68	99
101-00364-69	99
101-00365-64	99
101-00365-68	99
101-00365-69	99
101-00402-64	100
101-00402-68	100
101-00402-69	100
101-00405-64	95
101-00405-68	95
101-00405-69	95
101-00412-64	100
101-00412-68	100
101-00412-69	100
101-00578-64	100
101-00578-68	100
101-00578-69	100
101-00581-59	97
106-00069-10	102
106-00069-14	102
106-00069-15	102
106-00120-10	102
106-00120-14	102
106-00120-15	102
106-00330-10	103
106-00330-14	103
106-00330-15	103
106-00351-10	104

Part Number	Page number
106-00351-14	104
106-00351-15	104
1231112D1-E16A	110
1231121D1-E16A	110
1231121D1-E20	110
1231121D1-E22	110
1236252AF-ER2	110
1236412A1-E16	110
1236412A1-E16A	110
1236412A1-E20	110
132-2802-210	119
132-2802-214	119
132-2802-216	119
132-2802-220	119
132-2802-226	119
132-2802-234	119
132-2802-236	119
132-2802-240	119
132-2802-250	119
132-2802-260	119
132-2802-264	119
135-2802-310	120
135-2802-314	120
135-2802-316	120
135-2802-320	120
135-2802-324	120
135-2802-325	120
135-2802-326	120
135-2802-334	120
135-2802-336	120
135-2802-337	120
135-2802-340	120
135-2802-350	120
135-2802-360	120
135-2802-364	120
1561121AF-E20	111
1566251PF-ES1	111
1566412A1-E16	111
1566421AF-E06	111
1566421AF-E16	111
1566421AF-E16A	111
15712140	85
15712240	85
15712360	85
15712640	85
15722140	85
15722240	85
15722360	85
15722640	85
15732140	86
15732240	86
15732360	86
15732500	86
15742140	86
15742240	86
15742360	86
15742500	86
15762140	86
15762240	86
15762360	86
15762500	86
159-2801-009	117
159-2801-010	117
159-2801-015	117
159-2801-016	117
159-2801-020	117
159-2801-024	117
159-2801-025	117
159-2801-026	117
159-2801-034	117
159-2801-036	117
159-2801-037	117
159-2801-040	117
159-2801-050	117
159-2801-060	117
159-2801-064	117
191-2801-109	118
191-2801-110	118
191-2801-114	118

Part Number	Page number
191-2801-115	118
191-2801-116	118
191-2801-120	118
191-2801-124	118
191-2801-125	118
191-2801-126	118
191-2801-134	118
191-2801-136	118
191-2801-137	118
191-2801-140	118
191-2801-150	118
191-2801-160	118
191-2801-164	118
A-1JB	115
A-1PA-113-100B2	115
A-1PA-113-200B2	115
A-1PA-113-310B2	115
B1121A1-ND3G-1-50	106
B1121A1-ND3G-16-75	106
B1121A1-ND3G-1A-50	106
B1121A1-ND3G-3-50	106
B1121A1-ND3G-3-75	106
B1121A1-ND3G-7B-50	106
B1121A1-ND3G-8-75	106
B1121A6-NT3G-7-50	106
B1121A6-NT3G-7C-50	106
B1121A9-NT15G-18-75	106
B1121E1-ND3G-5-50	106
B1121E2-003-ND3G-6-75	106
B1121H1-001-ND3G-14-50	106
B6121A1-NT3G-1-50	106
B6121A1-NT3G-3-75	106
B6121A2-NT3G-8A-75	106
B6121B1-ND3G-16-75	106
B6121E1-ND3G-5-50	106
B625100-009-NT3G-50	106
B6251C1-NT3G-50	106
B6252H6-NPP3G-75T	106
B6252H8-NPP3G-75T	106
B6421A1-NT3G-1-50	106
B6421A1-NT3G-3-75	106
B6421E1-ND3G-6-75	106
B6421G1-ND3G-14-50	106
B6551E1-001-NT3G-50	106
C007-10B-012-0001	91
C007-10B-012-1001	91
C007-10B-014-0001	91
C007-10B-014-1001	91
C007-10B-016-0001	91
C007-10B-016-1001	91
C007-10B-017-0001	91
C007-10B-017-1001	91
C007-10B-018-0001	91
C007-10B-018-1001	91
C007-10B-022-0001	91
C007-10B-022-1001	91
C007-10B-025-0001	91
C007-10B-025-1001	91
C007-10B-026-0001	91
C007-10B-026-1001	91
C007-10B-030-0001	91
C007-10B-030-1001	91
FCE17-A15AD-210	52
FCE17-A15AD-240	52
FCE17-A15AD-290	52
FCE17-A15PA-410	53
FCE17-A15PA-440	53
FCE17-A15PE-210	58
FCE17-A15PE-240	58
FCE17-A15PM-210	55
FCE17-A15PM-240	55
FCE17-A15PM-290	55
FCE17-A15SA-410	54
FCE17-A15SA-440	54
FCE17-A15SE-210	57
FCE17-A15SE-240	57
FCE17-A15SM-210	56
FCE17-A15SM-240	56
FCE17-A15SM-290	56

PART NUMBER INDEX

Part Number	Page number
FCE17-B25AD-210	52
FCE17-B25AD-240	52
FCE17-B25AD-290	52
FCE17-B25PA-410	53
FCE17-B25PA-440	53
FCE17-B25PE-210	58
FCE17-B25PE-240	58
FCE17-B25PM-210	55
FCE17-B25PM-240	55
FCE17-B25PM-290	55
FCE17-B25SA-410	54
FCE17-B25SA-440	54
FCE17-B25SE-210	57
FCE17-B25SE-240	57
FCE17-B25SM-210	56
FCE17-B25SM-240	56
FCE17-B25SM-290	56
FCE17-C37AD-210	52
FCE17-C37AD-240	52
FCE17-C37AD-290	52
FCE17-C37PA-410	53
FCE17-C37PA-440	53
FCE17-C37PE-210	58
FCE17-C37PE-240	58
FCE17-C37PM-210	55
FCE17-C37PM-240	55
FCE17-C37PM-290	55
FCE17-C37SA-410	54
FCE17-C37SA-440	54
FCE17-C37SE-210	57
FCE17-C37SE-240	57
FCE17-C37SM-240	56
FCE17-C37SM-290	56
FCE17-E09AD-210	52
FCE17-E09AD-240	52
FCE17-E09AD-290	52
FCE17-E09PA-410	53
FCE17-E09PA-440	53
FCE17-E09PE-210	58
FCE17-E09PE-240	58
FCE17-E09PM-210	55
FCE17-E09PM-240	55
FCE17-E09PM-290	55
FCE17-E09SA-410	54
FCE17-E09SA-440	54
FCE17-E09SE-210	57
FCE17-E09SE-240	57
FCE17-E09SM-210	56
FCE17-E09SM-240	56
FCE17-E09SM-290	56
FRJAE-408	63
FRJAE-418	63
FRJAE-438	63
FRJAE-438	63
FRJAE-488	63
FS1R262000	71
FS1S0114E1	71
FS1S0214E1	71
FS1SF114E1	71
FS1SF214E1	71
FS1SF414E1	71
G091131300LF	76
G091131301LF	76
G091231301LF	76
G091322301AWEU	76
G092532332WEU	76
G092552331WEU	76
G16A2121MEU	75
G16A9111WLF	75
G16AD0216WEU	75
G16AD021WEU	75
G16CE1111WEU	75
G16CE21210W1EU	75
G16CE22110WEU	75
G16CE41210W1EU	75
G16CE5021WEU	75
G16CE5121WLF	75
G16CE7021WEU	75
G38A11214AEU	74

Part Number	Page number
G38A11314AEU	74
G38A12214AEU	74
G38A12314AEU	74
G38A21114AEU	74
G38A21214AEU	74
G38A21414AEU	74
G38A21514AEU	74
G38A21614AEU	74
G38A21714AEU	74
G38A22114AEU	74
G38A22214AEU	74
G38A22414AEU	74
G38A22514AEU	74
G38A22614AEU	74
G38A22714AEU	74
G38A71214AEU	74
G38A71314AEU	74
G38A72214AEU	74
G38A72314AEU	74
G41A11214AEU	74
G41A11314AEU	74
G41A12214AEU	74
G41A12314AEU	74
G41A21114AEU	74
G41A21214AEU	74
G41A21414AEU	74
G41A21514AEU	74
G41A21614AEU	74
G41A21714AEU	74
G41A22114AEU	74
G41A22214AEU	74
G41A22414AEU	74
G41A22514AEU	74
G41A22614AEU	74
G41A22714AEU	74
G630E3601210	93
G630E3611210	93
G630E6401210	93
G630E6411210	93
G630E9801210	93
G630E9811210	93
G630EAA03220	93
G630EAA13220	93
HDM-F191-001-12	78
HDM-F191-001-22	78
HDM-F191-003-12	78
HDM-F191-003-22	78
HDM-F191-015-12	78
HDM-F191-015-22	78
HDM-F191-016-12	78
HDM-F191-016-22	78
HDM-F191-017-12	78
HDM-F191-017-22	78
HDM-F191-018-12	78
HDM-F191-018-22	78
HDM-F192-008-12	78
HDM-F192-008-22	78
HDM-F192-009-12	78
HDM-F192-009-22	78
L117DAFRA15P	13
L117DAFRA15S	14
L117DBFRA25P	13
L117DBFRA25S	14
L117DCFRA37P	13
L117DCFRA37S	14
L117DEFRA09P	13
L117DEFRA09S	14
L177HDA26S	32
L177HDA26SD1CH3F	44
L177HDA26SD1CH3R	42
L177HDA26SD1CH4F	44
L177HDA26SD1CH4R	42
L177HDAG26SOL2RM5	38
L177HDAG26SOL2RM8	40
L177HDAH26SOL2RM5	38
L177HDAH26SOL2RM8	40
L177HDB44S	32
L177HDB44SD1CH3F	44
L177HDB44SD1CH3R	42

Part Number	Page number
L177HDB44SD1CH4F	44
L177HDB44SD1CH4R	42
L177HDBG44SOL2RM5	38
L177HDBG44SOL2RM8	40
L177HDBH44SOL2RM5	38
L177HDBH44SOL2RM8	40
L177HDC62S	32
L177HDC62SD1CH3F	44
L177HDC62SD1CH3R	42
L177HDC62SD1CH4F	44
L177HDC62SD1CH4R	42
L177HDCG62SOL2RM5	38
L177HDCG62SOL2RM8	40
L177HDCH62SOL2RM5	38
L177HDCH62SOL2RM8	40
L177HDE15S	32
L177HDE15SD1CH3F	44
L177HDE15SD1CH3R	42
L177HDE15SD1CH4F	44
L177HDE15SD1CH4R	42
L177HDEG15SOL2RM5	38
L177HDEG15SOL2RM8	40
L177HDEH15SOL2RM5	38
L177HDEH15SOL2RM8	40
L177HRA26S	34
L177HRB44S	34
L177HRC62S	34
L177HRE15S	34
L177RRA15S	10
L177RRB25S	10
L177RRC37S	10
L177RRE09S	10
L177SDA15S	8
L177SDA15S1ACH3F	30
L177SDA15S1ACH3R	28
L177SDA15S1ACH4F	30
L177SDA15S1ACH4R	28
L177SDA15SA4CH3F	26
L177SDA15SA4CH3R	24
L177SDA15SA4CH4F	26
L177SDA15SA4CH4R	24
L177SDAG15SOL2RM5	16
L177SDAG15SOL2RM8	18
L177SDAH15SOL2RM5	16
L177SDAH15SOL2RM8	18
L177SDB25S	8
L177SDB25S1ACH3F	30
L177SDB25S1ACH3R	28
L177SDB25S1ACH4F	30
L177SDB25S1ACH4R	28
L177SDB25SA4CH3F	26
L177SDB25SA4CH3R	24
L177SDB25SA4CH4F	26
L177SDB25SA4CH4R	24
L177SDBG25SOL2RM5	16
L177SDBG25SOL2RM8	18
L177SDBH25SOL2RM5	16
L177SDBH25SOL2RM8	18
L177SDC37S	8
L177SDC37S1ACH3F	30
L177SDC37S1ACH3R	28
L177SDC37S1ACH4F	30
L177SDC37S1ACH4R	28
L177SDC37SA4CH3F	26
L177SDC37SA4CH3R	24
L177SDC37SA4CH4F	26
L177SDC37SA4CH4R	24
L177SDCG37SOL2RM5	16
L177SDCG37SOL2RM8	18
L177SDCH37SOL2RM5	16
L177SDCH37SOL2RM8	18
L177SDE09S	8
L177SDE09S1ACH3F	30
L177SDE09S1ACH3R	28
L177SDE09S1ACH4F	30
L177SDE09S1ACH4R	28
L177SDE09SA4CH3F	26
L177SDE09SA4CH3R	24
L177SDE09SA4CH4F	26

PART NUMBER INDEX

Part Number	Page number
L177SDE09SA4CH4R	24
L177SDEG09SOL2RM5	16
L177SDEG09SOL2RM8	18
L177SDEH09SOL2RM5	16
L177SDEH09SOL2RM8	18
L177TSAG15SOL2RM5	20
L177TSAG15SOL2RM8	22
L177TSAH15SOL2RM5	20
L177TSAH15SOL2RM8	22
L177TSBG25SOL2RM5	20
L177TSBG25SOL2RM8	22
L177TSBH25SOL2RM5	20
L177TSBH25SOL2RM8	22
L177TSCG37SOL2RM5	20
L177TSCG37SOL2RM8	22
L177TSCH37SOL2RM5	20
L177TSCH37SOL2RM8	22
L177TSEG09SOL2RM5	20
L177TSEG09SOL2RM8	22
L177TSEH09SOL2RM5	20
L177TSEH09SOL2RM8	22
L17DAFRA15P	13
L17DAFRA15PC309	13
L17DAFRA15S	14
L17DAFRA15SC309	14
L17DBFRA25P	13
L17DBFRA25PC309	13
L17DBFRA25S	14
L17DBFRA25SC309	14
L17DCFRA37P	13
L17DCFRA37PC309	13
L17DCFRA37S	14
L17DCFRA37SC309	14
L17DEFRA09P	13
L17DEFRA09PC309	13
L17DEFRA09S	14
L17DEFRA09SC309	14
L17DPPK09JS	45
L17DPPK09TM	47
L17DPPK15JS	45
L17DPPK15TM	47
L17DPPK25JS	45
L17DPPK25TM	47
L17DPPK37JS	45
L17DPPK37TM	47
L17DSSK09TM	48
L17DSSK09TP	46
L17DSSK15TM	48
L17DSSK15TP	46
L17DSSK25TM	48
L17DSSK25TP	46
L17DSSK37TM	48
L17DSSK37TP	46
L17DTZK15K	49
L17DTZK25K	49
L17DTZK37K	49
L17DTZK9K	49
L17DVZK15K	50
L17DVZK25K	50
L17DVZK37K	50
L17DVZK9K	50
L17HRD2F0110K	36
L17HRD2F0210K	36
L17HRD2F025K	36
L17HRD2F0410K	36
L17HRD2F045K	36
L17HRD2F1110K	36
L17HRD2F115K	36
L17HRD2F1210K	36
L17HRD2F125K	36
L17HRD2F1410K	36
L17HRD2F145K	36
L17HRD2M0110K	35
L17HRD2M015K	35
L17HRD2M0210K	35
L17HRD2M025K	35
L17HRD2M0410K	35
L17HRD2M045K	35
L17HRD2M1110K	35

Part Number	Page number
L17HRD2M115K	35
L17HRD2M1210K	35
L17HRD2M125K	35
L17HRD2M1410K	35
L17HRD2M1410K	36
L17HRD2M145K	35
L17RRD1F01100	12
L17RRD1F0110K	12
L17RRD1F012K	12
L17RRD1F01400	12
L17RRD1F02100	12
L17RRD1F0210K	12
L17RRD1F022K	12
L17RRD1F02400	12
L17RRD1F04100	12
L17RRD1F0410K	12
L17RRD1F042K	12
L17RRD1F04400	12
L17RRD1F11100	12
L17RRD1F1110K	12
L17RRD1F112K	12
L17RRD1F11400	12
L17RRD1F12100	12
L17RRD1F1210K	12
L17RRD1F122K	12
L17RRD1F12400	12
L17RRD1F14100	12
L17RRD1F1410K	12
L17RRD1F142K	12
L17RRD1F14400	12
L17RRD1M01100	11
L17RRD1M0110K	11
L17RRD1M012K	11
L17RRD1M01400	11
L17RRD1M02100	11
L17RRD1M0210K	11
L17RRD1M022K	11
L17RRD1M02400	11
L17RRD1M04100	11
L17RRD1M0410K	11
L17RRD1M042K	11
L17RRD1M04400	11
L17RRD1M11100	11
L17RRD1M1110K	11
L17RRD1M112K	11
L17RRD1M11400	11
L17RRD1M12100	11
L17RRD1M1210K	11
L17RRD1M122K	11
L17RRD1M12400	11
L17RRD1M14100	11
L17RRD1M1410K	11
L17RRD1M142K	11
L17RRD1M14400	11
L17RRD2F01100	12
L17RRD2F0110K	12
L17RRD2F012K	12
L17RRD2F01400	12
L17RRD2F02100	12
L17RRD2F0210K	12
L17RRD2F022K	12
L17RRD2F02400	12
L17RRD2F04100	12
L17RRD2F0410K	12
L17RRD2F042K	12
L17RRD2F04400	12
L17RRD2F11100	12
L17RRD2F1110K	12
L17RRD2F112K	12
L17RRD2F11400	12
L17RRD2F12100	12
L17RRD2F1210K	12
L17RRD2F122K	12
L17RRD2F12400	12
L17RRD2F14100	12
L17RRD2F1410K	12
L17RRD2F142K	12
L17RRD2F14400	12
L17RRD2M01100	11

Part Number	Page number
L17RRD2M0110K	11
L17RRD2M012K	11
L17RRD2M01400	11
L17RRD2M02100	11
L17RRD2M0210K	11
L17RRD2M022K	11
L17RRD2M02400	11
L17RRD2M04100	11
L17RRD2M0410K	11
L17RRD2M042K	11
L17RRD2M04400	11
L17RRD2M11100	11
L17RRD2M1110K	11
L17RRD2M112K	11
L17RRD2M11400	11
L17RRD2M12100	11
L17RRD2M1210K	11
L17RRD2M122K	11
L17RRD2M12400	11
L17RRD2M14100	11
L17RRD2M1410K	11
L17RRD2M142K	11
L17RRD2M14400	11
L717HDA26P	31
L717HDA26PC309	31
L717HDA26PD1CH3F	43
L717HDA26PD1CH3FC309	43
L717HDA26PD1CH3R	41
L717HDA26PD1CH3RC309	41
L717HDA26PD1CH4F	43
L717HDA26PD1CH4FC309	43
L717HDA26PD1CH4R	41
L717HDA26PD1CH4RC309	41
L717HDAG26POL2RM5	37
L717HDAG26POL2RM5C309	37
L717HDAG26POL2RM8	39
L717HDAG26POL2RM8C309	39
L717HDAH26POL2RM5	37
L717HDAH26POL2RM5C309	37
L717HDAH26POL2RM8	39
L717HDAH26POL2RM8C309	39
L717HDB44P	31
L717HDB44P	31
L717HDB44PC309	31
L717HDB44PD1CH3F	43
L717HDB44PD1CH3FC309	43
L717HDB44PD1CH3R	41
L717HDB44PD1CH3RC309	41
L717HDB44PD1CH4F	43
L717HDB44PD1CH4FC309	43
L717HDB44PD1CH4R	41
L717HDB44PD1CH4RC309	41
L717HDBG44POL2RM5	37
L717HDBG44POL2RM5C309	37
L717HDBG44POL2RM8	39
L717HDBG44POL2RM8C309	39
L717HDBH44POL2RM5	37
L717HDBH44POL2RM5C309	37
L717HDBH44POL2RM8	39
L717HDBH44POL2RM8C309	39
L717HDC62PC309	31
L717HDC62PD1CH3F	43
L717HDC62PD1CH3FC309	43
L717HDC62PD1CH3R	41
L717HDC62PD1CH3RC309	41
L717HDC62PD1CH4F	43
L717HDC62PD1CH4FC309	43
L717HDC62PD1CH4R	41
L717HDC62PD1CH4RC309	41
L717HDCG62POL2RM5	37
L717HDCG62POL2RM5C309	37
L717HDCG62POL2RM8	39
L717HDCG62POL2RM8C309	39
L717HDCH62POL2RM5	37
L717HDCH62POL2RM5C309	37
L717HDCH62POL2RM8	39
L717HDCH62POL2RM8C309	39
L717HDE15P	31
L717HDE15PC309	31

PART NUMBER INDEX

Part Number	Page number
L717HDE15PD1CH3F	43
L717HDE15PD1CH3R	41
L717HDE15PD1CH3RC309	41
L717HDE15PD1CH4F	43
L717HDE15PD1CH4FC309	43
L717HDE15PD1CH4R	41
L717HDE15PD1CH4RC309	41
L717HDEG15POL2RM5	37
L717HDEG15POL2RM5C309	37
L717HDEG15POL2RM8	39
L717HDEG15POL2RM8C309	39
L717HDEH15POL2RM5	37
L717HDEH15POL2RM5C309	37
L717HDEH15POL2RM8	39
L717HDEH15POL2RM8C309	39
L717SDA15P	7
L717SDA15P1ACH3F	29
L717SDA15P1ACH3FC309	29
L717SDA15P1ACH3R	27
L717SDA15P1ACH3RC309	27
L717SDA15P1ACH4F	29
L717SDA15P1ACH4FC309	29
L717SDA15P1ACH4R	27
L717SDA15P1ACH4RC309	27
L717SDA15PA4CH3F	25
L717SDA15PA4CH3FC309	25
L717SDA15PA4CH3R	23
L717SDA15PA4CH3RC309	23
L717SDA15PA4CH4F	25
L717SDA15PA4CH4FC309	25
L717SDA15PA4CH4R	23
L717SDA15PA4CH4RC309	23
L717SDA15PC309	7
L717SDAG15POL2RM5	15
L717SDAG15POL2RM5C309	15
L717SDAG15POL2RM8	17
L717SDAG15POL2RM8C309	17
L717SDAH15POL2RM5	15
L717SDAH15POL2RM5C309	15
L717SDAH15POL2RM8	17
L717SDAH15POL2RM8C309	17
L717SDB25P	7
L717SDB25P1ACH3F	29
L717SDB25P1ACH3FC309	29
L717SDB25P1ACH3R	27
L717SDB25P1ACH3RC309	27
L717SDB25P1ACH4F	29
L717SDB25P1ACH4FC309	29
L717SDB25P1ACH4R	27
L717SDB25P1ACH4RC309	27
L717SDB25PA4CH3F	25
L717SDB25PA4CH3FC309	25
L717SDB25PA4CH3R	23
L717SDB25PA4CH3RC309	23
L717SDB25PA4CH4F	25
L717SDB25PA4CH4FC309	25
L717SDB25PA4CH4R	23
L717SDB25PA4CH4RC309	23
L717SDB25PC309	7
L717SDBG25POL2RM5	15
L717SDBG25POL2RM5C309	15
L717SDBG25POL2RM8	17
L717SDBG25POL2RM8C309	17
L717SDBH25POL2RM5	15
L717SDBH25POL2RM5C309	15
L717SDBH25POL2RM8	17
L717SDBH25POL2RM8C309	17
L717SDC37P	7
L717SDC37P1ACH3F	29
L717SDC37P1ACH3FC309	29
L717SDC37P1ACH3FC309	29
L717SDC37P1ACH3R	27
L717SDC37P1ACH3RC309	27
L717SDC37P1ACH4F	29
L717SDC37P1ACH4FC309	29
L717SDC37P1ACH4R	27
L717SDC37P1ACH4RC309	27
L717SDC37PA4CH3F	25
L717SDC37PA4CH3FC309	25
L717SDC37PA4CH3R	23
L717SDC37PA4CH3RC309	23
L717SDC37PA4CH4F	25
L717SDC37PA4CH4FC309	25
L717SDC37PA4CH4R	23
L717SDC37PA4CH4RC309	23
L717SDC37PC309	7
L717SDCG37POL2RM5	15
L717SDCG37POL2RM5C309	15
L717SDCG37POL2RM8	17
L717SDCG37POL2RM8C309	17
L717SDCH37POL2RM5	15
L717SDCH37POL2RM5C309	15
L717SDCH37POL2RM8	17
L717SDCH37POL2RM8C309	17
L717SDE09P	7
L717SDE09P1ACH3F	29
L717SDE09P1ACH3FC309	29
L717SDE09P1ACH3R	27
L717SDE09P1ACH3RC309	27
L717SDE09P1ACH4F	29
L717SDE09P1ACH4FC309	29
L717SDE09P1ACH4R	27
L717SDE09P1ACH4RC309	27
L717SDE09PA4CH3F	25
L717SDE09PA4CH3FC309	25
L717SDE09PA4CH3R	23
L717SDE09PA4CH3RC309	23
L717SDE09PA4CH4F	25
L717SDE09PA4CH4FC309	25
L717SDE09PA4CH4R	23
L717SDE09PA4CH4RC309	23
L717SDE09PC309	7
L717SDEG09POL2RM5	15
L717SDEG09POL2RM5C309	15
L717SDEG09POL2RM8	17
L717SDEG09POL2RM8C309	17
L717SDEH09POL2RM5	15
L717SDEH09POL2RM5C309	15
L717SDEH09POL2RM8	17
L717SDEH09POL2RM8C309	17
L717TSAG15POL2RM5	19
L717TSAG15POL2RM5C309	19
L717TSAG15POL2RM8	21
L717TSAG15POL2RM8C309	21
L717TSAH15POL2RM5	19
L717TSAH15POL2RM5C309	19
L717TSAH15POL2RM8	21
L717TSAH15POL2RM8C309	21
L717TSBG25POL2RM5	19
L717TSBG25POL2RM5C309	19
L717TSBG25POL2RM8	21
L717TSBG25POL2RM8C309	21
L717TSBH25POL2RM5	19
L717TSBH25POL2RM5C309	19
L717TSBH25POL2RM8	21
L717TSBH25POL2RM8C309	21
L717TSBH25POL2RM8C309	21
L717TSCG37POL2RM5	19
L717TSCG37POL2RM5C309	19
L717TSCG37POL2RM8	21
L717TSCG37POL2RM8C309	21
L717TSCH37POL2RM5	19
L717TSCH37POL2RM5C309	19
L717TSCH37POL2RM8	21
L717TSCH37POL2RM8C309	21
L717TSEG09POL2RM5	19
L717TSEG09POL2RM5C309	19
L717TSEG09POL2RM8	21
L717TSEG09POL2RM8C309	21
L717TSEH09POL2RM5	19
L717TSEH09POL2RM5C309	19
L717TSEH09POL2RM8	21
L777HDA26PD1CH3F	43
L777HDA26PD1CH3R	41
L777HDA26PD1CH4F	43
L777HDA26PD1CH4R	41
L777HDAG26POL2RM5	37
L777HDAG26POL2RM8	39
L777HDAH26POL2RM5	37
L777HDAH26POL2RM8	39
L777HDB44P	31
L777HDB44PD1CH3F	43
L777HDB44PD1CH3R	41
L777HDB44PD1CH4F	43
L777HDB44PD1CH4R	41
L777HDBG44POL2RM5	37
L777HDBG44POL2RM8	39
L777HDBH44POL2RM5	37
L777HDBH44POL2RM8	39
L777HDC62P	31
L777HDC62PD1CH3F	43
L777HDC62PD1CH3R	41
L777HDC62PD1CH4F	43
L777HDC62PD1CH4R	41
L777HDCG62POL2RM5	37
L777HDCG62POL2RM8	39
L777HDCH62POL2RM5	37
L777HDCH62POL2RM8	39
L777HDE15P	31
L777HDE15P	31
L777HDE15PD1CH3F	43
L777HDE15PD1CH3R	41
L777HDE15PD1CH4F	43
L777HDE15PD1CH4R	41
L777HDEG15POL2RM5	37
L777HDEG15POL2RM8	39
L777HDEH15POL2RM5	37
L777HDEH15POL2RM8	39
L777HRA26P	33
L777HRB44P	33
L777HRC62P	33
L777HRE15P	33
L777RRA15P	9
L777RRB25P	9
L777RRC37P	9
L777RRE09P	9
L777SDA15P	7
L777SDA15P1ACH3F	29
L777SDA15P1ACH3R	27
L777SDA15P1ACH4F	29
L777SDA15P1ACH4R	27
L777SDA15PA4CH3F	25
L777SDA15PA4CH3R	23
L777SDA15PA4CH4F	25
L777SDA15PA4CH4R	23
L777SDAG15POL2RM5	15
L777SDAG15POL2RM8	17
L777SDAH15POL2RM5	15
L777SDAH15POL2RM8	17
L777SDB25P	7
L777SDB25P1ACH3F	29
L777SDB25P1ACH3R	27
L777SDB25P1ACH4F	29
L777SDB25P1ACH4R	27
L777SDB25PA4CH3F	25
L777SDB25PA4CH3R	23
L777SDB25PA4CH4F	25
L777SDB25PA4CH4R	23
L777SDBG25POL2RM5	15
L777SDBG25POL2RM8	17
L777SDBH25POL2RM5	15
L777SDBH25POL2RM8	17
L777SDC37P	7
L777SDC37P1ACH3F	29
L777SDC37P1ACH3R	27
L777SDC37P1ACH4F	29
L777SDC37P1ACH4R	27
L777SDC37PA4CH3F	25
L777SDC37PA4CH3R	23
L777SDC37PA4CH4F	25
L777SDC37PA4CH4R	23
L777SDCG37POL2RM5	15
L777SDCG37POL2RM8	17
L777SDCH37POL2RM5	15
L777SDCH37POL2RM8	17
L777SDE09P	7
L777SDE09P1ACH3F	29

PART NUMBER INDEX

Part Number	Page number
L777SDE09P1ACH3R	27
L777SDE09P1ACH4F	29
L777SDE09P1ACH4R	27
L777SDE09PA4CH3F	25
L777SDE09PA4CH3R	23
L777SDE09PA4CH4F	25
L777SDE09PA4CH4R	23
L777SDEG09POL2RM5	15
L777SDEG09POL2RM8	17
L777SDEH09POL2RM5	15
L777SDEH09POL2RM8	17
L777TSAG15POL2RM5	19
L777TSAG15POL2RM8	21
L777TSAH15POL2RM5	19
L777TSAH15POL2RM8	21
L777TSBG25POL2RM5	19
L777TSBH25POL2RM5	19
L777TSBH25POL2RM8	21
L777TSCG37POL2RM5	19
L777TSCH37POL2RM5	19
L777TSEG09POL2RM5	19
L777TSEG09POL2RM8	21
L777TSEH09POL2RM5	19
L777TSEH09POL2RM8	21
L77HDA26S	32
L77HDA26SC309	32
L77HDA26SD1CH3F	44
L77HDA26SD1CH3FC309	44
L77HDA26SD1CH3R	42
L77HDA26SD1CH3RC309	42
L77HDA26SD1CH4F	44
L77HDA26SD1CH4FC309	44
L77HDA26SD1CH4R	42
L77HDA26SD1CH4RC309	42
L77HDAG26SOL2RM5	38
L77HDAG26SOL2RM5C309	38
L77HDAG26SOL2RM8	40
L77HDAG26SOL2RM8C309	40
L77HDAH26SOL2RM5	38
L77HDAH26SOL2RM5C309	38
L77HDAH26SOL2RM8	40
L77HDAH26SOL2RM8C309	40
L77HDB44S	32
L77HDB44SC309	32
L77HDB44SD1CH3F	44
L77HDB44SD1CH3FC309	44
L77HDB44SD1CH3R	42
L77HDB44SD1CH3RC309	42
L77HDB44SD1CH4F	44
L77HDB44SD1CH4FC309	44
L77HDB44SD1CH4R	42
L77HDB44SD1CH4RC309	42
L77HDBG44SOL2RM5	38
L77HDBG44SOL2RM5C309	38
L77HDBG44SOL2RM8	40
L77HDBG44SOL2RM8C309	40
L77HDBH44SOL2RM5	38
L77HDBH44SOL2RM5C309	38
L77HDBH44SOL2RM8	40
L77HDBH44SOL2RM8C309	40
L77HDC62S	32
L77HDC62SC309	32
L77HDC62SD1CH3F	44
L77HDC62SD1CH3FC309	44
L77HDC62SD1CH3R	42
L77HDC62SD1CH3RC309	42
L77HDC62SD1CH4F	44
L77HDC62SD1CH4FC309	44
L77HDC62SD1CH4R	42
L77HDC62SD1CH4RC309	42
L77HDCG62SOL2RM5	38
L77HDCG62SOL2RM5C309	38
L77HDCG62SOL2RM8	40
L77HDCG62SOL2RM8C309	40
L77HDCH62SOL2RM5	38
L77HDCH62SOL2RM5C309	38
L77HDCH62SOL2RM8	40
L77HDCH62SOL2RM8C309	40
L77HDE15S	32

Part Number	Page number
L77HDE15SC309	32
L77HDE15SD1CH3F	44
L77HDE15SD1CH3FC309	44
L77HDE15SD1CH3R	42
L77HDE15SD1CH3RC309	42
L77HDE15SD1CH4F	44
L77HDE15SD1CH4FC309	44
L77HDE15SD1CH4R	42
L77HDE15SD1CH4RC309	42
L77HDEG15SOL2RM5	38
L77HDEG15SOL2RM5C309	38
L77HDEG15SOL2RM8	40
L77HDEG15SOL2RM8C309	40
L77HDEH15SOL2RM5	38
L77HDEH15SOL2RM5C309	38
L77HDEH15SOL2RM8	40
L77HDEH15SOL2RM8C309	40
L77SDA15S	8
L77SDA15S1ACH3F	30
L77SDA15S1ACH3FC309	30
L77SDA15S1ACH3R	28
L77SDA15S1ACH3RC309	28
L77SDA15S1ACH4F	30
L77SDA15S1ACH4FC309	30
L77SDA15S1ACH4R	28
L77SDA15S1ACH4RC309	28
L77SDA15SA4CH3F	26
L77SDA15SA4CH3FC309	26
L77SDA15SA4CH3R	24
L77SDA15SA4CH3RC309	24
L77SDA15SA4CH4F	26
L77SDA15SA4CH4FC309	26
L77SDA15SA4CH4R	24
L77SDA15SA4CH4RC309	24
L77SDA15SC309	8
L77SDAG15SOL2RM5	16
L77SDAG15SOL2RM5C309	16
L77SDAG15SOL2RM8	18
L77SDAG15SOL2RM8C309	18
L77SDAH15SOL2RM5	16
L77SDAH15SOL2RM5C309	16
L77SDAH15SOL2RM8	18
L77SDAH15SOL2RM8C309	18
L77SDB25S	8
L77SDB25S1ACH3F	30
L77SDB25S1ACH3FC309	30
L77SDB25S1ACH3R	28
L77SDB25S1ACH3RC309	28
L77SDB25S1ACH4F	30
L77SDB25S1ACH4F	30
L77SDB25S1ACH4FC309	30
L77SDB25S1ACH4R	28
L77SDB25S1ACH4RC309	28
L77SDB25SA4CH3F	26
L77SDB25SA4CH3FC309	26
L77SDB25SA4CH3R	24
L77SDB25SA4CH3RC309	24
L77SDB25SA4CH4F	26
L77SDB25SA4CH4FC309	26
L77SDB25SA4CH4R	24
L77SDB25SA4CH4RC309	24
L77SDB25SC309	8
L77SDBG25SOL2RM5	16
L77SDBG25SOL2RM5C309	16
L77SDBG25SOL2RM8	18
L77SDBG25SOL2RM8C309	18
L77SDBH25SOL2RM5	16
L77SDBH25SOL2RM5C309	16
L77SDBH25SOL2RM8	18
L77SDBH25SOL2RM8C309	18
L77SDC37S	8
L77SDC37S1ACH3F	30
L77SDC37S1ACH3FC309	30
L77SDC37S1ACH3R	28
L77SDC37S1ACH3RC309	28
L77SDC37S1ACH4F	30
L77SDC37S1ACH4FC309	30
L77SDC37S1ACH4R	28
L77SDC37S1ACH4RC309	28

Part Number	Page number
L77SDC37SA4CH3F	26
L77SDC37SA4CH3FC309	26
L77SDC37SA4CH3R	24
L77SDC37SA4CH3RC309	24
L77SDC37SA4CH4F	26
L77SDC37SA4CH4FC309	26
L77SDC37SA4CH4R	24
L77SDC37SA4CH4RC309	24
L77SDC37SC309	8
L77SDCG37SOL2RM5	16
L77SDCG37SOL2RM5C309	16
L77SDCG37SOL2RM8	18
L77SDCG37SOL2RM8C309	18
L77SDCH37SOL2RM5	16
L77SDCH37SOL2RM5C309	16
L77SDCH37SOL2RM8	18
L77SDCH37SOL2RM8C309	18
L77SDE09S	8
L77SDE09S1ACH3F	30
L77SDE09S1ACH3FC309	30
L77SDE09S1ACH3R	28
L77SDE09S1ACH3RC309	28
L77SDE09S1ACH4FC309	30
L77SDE09S1ACH4R	28
L77SDE09S1ACH4RC309	28
L77SDE09SA4CH3F	26
L77SDE09SA4CH3FC309	26
L77SDE09SA4CH3R	24
L77SDE09SA4CH3RC309	24
L77SDE09SA4CH4F	26
L77SDE09SA4CH4FC309	26
L77SDE09SA4CH4R	24
L77SDE09SA4CH4RC309	24
L77SDE09SC309	8
L77SDEG09SOL2RM5	16
L77SDEG09SOL2RM5C309	16
L77SDEG09SOL2RM8	18
L77SDEG09SOL2RM8C309	18
L77SDEH09SOL2RM5	16
L77SDEH09SOL2RM5C309	16
L77SDEH09SOL2RM8	18
L77SDEH09SOL2RM8C309	18
L77TSAG15SOL2RM5	20
L77TSAG15SOL2RM5C309	20
L77TSAG15SOL2RM8	22
L77TSAG15SOL2RM8C309	22
L77TSAH15SOL2RM5	20
L77TSAH15SOL2RM5C309	20
L77TSAH15SOL2RM8	22
L77TSAH15SOL2RM8C309	22
L77TSBG25SOL2RM5	20
L77TSBG25SOL2RM5C309	20
L77TSBG25SOL2RM8	22
L77TSBG25SOL2RM8C309	22
L77TSBH25SOL2RM5	20
L77TSBH25SOL2RM5C309	20
L77TSBH25SOL2RM8	22
L77TSBH25SOL2RM8C309	22
L77TSCG37SOL2RM5	20
L77TSCG37SOL2RM5C309	20
L77TSCG37SOL2RM8	22
L77TSCG37SOL2RM8C309	22
L77TSCH37SOL2RM5	20
L77TSCH37SOL2RM5C309	20
L77TSCH37SOL2RM8	22
L77TSCH37SOL2RM8C309	22
L77TSEG09SOL2RM5	20
L77TSEG09SOL2RM5C309	20
L77TSEG09SOL2RM8	22
L77TSEG09SOL2RM8C309	22
L77TSEH09SOL2RM5	20
L77TSEH09SOL2RM5C309	20
L77TSEH09SOL2RM8	22
L77TSEH09SOL2RM8C309	22
MCX1112A1-3GT30G-5-50	107
MCX1121A1-3GT30G-14-50	107
MCX1121A1-3GT30G-5-50	107
MCX6121A1-3GT30G-14-50	107
MCX6121A1-3GT30G-5-50	107

PART NUMBER INDEX

Part Number	Page number
MCX6251A1-3GT30G-50	107
MCX6252B1-3GT30G-50	107
MD5ID20F0L37	80
MD5ID26F0L37	80
MD5ID36F0L37	80
MD5ID50F0L37	80
MD5ID68F0L37	80
MD5PL20S60CBK	83
MD5PL20S65CBK	83
MD5PL20S70CBK	83
MD5PL20S75CBK	83
MD5PL26S70CBK	83
MD5PL26S80CBK	83
MD5PL26S85CBK	83
MD5PL36S70CBK	83
MD5PL36S80CBK	83
MD5PL36S85CBK	83
MD5PL36S90CBK	83
MD5PL50S10CBK	83
MD5PL50S90CBK	83
MD5SC20F0L3	81
MD5SC26F0L3	81
MD5SC36F0L3	81
MD5SC50F0L3	81
MD5SC68F0L3	81
MD5SP20F0L3	82
MD5SP26F0L3	82
MD5SP36F0L3	82
MD5SP50F0L3	82
MD5SP68F0L3	82
MMCX1112A1-3GT30G-14-50	108
MMCX1112A1-3GT30G-5-50	108
MMCX1121A1-3GT30G-14-50	108
MMCX1121A1-3GT30G-5-50	108
MMCX6251N2-3GT30G-50	108
MMCX6252N1-3GT30G-50	108
N6121A2-NT3G-7C-50	109
N6421A1-NT3G-1-50	109
N6421A1-NT3G-1A-50	109
N6551A1-NT3G-50	109
N6551E1-NT3G-50	109
RJHSE-3080	61
RJHSE-3081	61
RJHSE-3085	61
RJHSE-3380	61
RJHSE-3381	61
RJHSE-3384	61
RJHSE-3385	61
RJHSE-338A	61
RJHSE-338B	61
RJHSE-5080	60
RJHSE-5081	60
RJHSE-5084-04	60
RJHSE-5085	60
RJHSE-5085-02	60
RJHSE-5380	60
RJHSE-5381	60
RJHSE-5381-04	60
RJHSE-5382	60
RJHSE-5384	60
RJHSE-5384-02	60
RJHSE-5385	60
RJMG163117101NR	64
RJMG163118101NR	64
RJMG163213101NR	64
RJMG163217101NR	64
RJMG163218101NR	64
RJMG201021110NR	65
RJMG201021120NR	65
RJMG201021210NR	65
RJMG201021610NR	65
RJMG201022610NR	65
RJSAE538102	62
RJSAE538104	62
RJSAE538108	62
RJSAE538A02	62
RJSAE538A04	62
RJSAE538A08	62
RJSSE-5080	60

Part Number	Page number
RJSSE-5380	60
RJSSE-5381-02	60
SAACA200001	122
SAACA200004	122
SAACA200018	123
SAACA200019	123
SAACA200020	124
SAACA200022	124
SAACA200025	125
SAACA200033	125
SMA1111A1-3GT50G-1-50	112
SMA1111A1-3GT50G-1A-50	112
SMA1111A2-3GT50G-5-50	112
SMA1111A6-3GT50G-7B-50	112
SMA1112A3-3GT50G-14-50	112
SMA1112A5-3GT50G-5-50	112
SMA6251A1-008-3GT50G-50	112
SMA6252D1-3GT50G-50	112
SMA6411A4-NT50G-5-50	112
SMA6411G2-3GT50G-14-50	112
SMA6551A1-3GT50G-50	112
SMB1121A1-3GT30G-14-50	113
SMB1121A1-3GT30G-5-50	113
SMB1252PF-001-3GT30G-50	113
SMB6121A1-3GT30G-14-50	113
SMB6121A1-3GT30G-5-50	113
SMB6121AA-3GT30G-19-75	113
SMB6121AA-NT30G-6-75	113
SMB6252B1-3GT30G-50	113
SMB6252B1-3GT30G-75	113
T1112A1-ND3G-1-50	114
T1121A1-ND3G-1-50	114
T1121A1-ND3G-1A-50	114
T1121G1-ND3G-5-50	114
T6121A1-ND3G-1A-50	114
T6121A1-NT3G-1-50	114
T6251C1-NT3G-50	114
T6252H7-NPP3G-50	114
T6551A1-NT3G-50	114
T6551E1-001-NT3G-50	114
T812016A101CEU	88
T812020A101CEU	88
T812026A101CEU	88
T812110A101CEU	88
T812114A101CEU	88
T812116A101CEU	88
T812120A101CEU	88
T812126A101CEU	88
T812134A101CEU	88
T812140A101CEU	88
T812150A101CEU	88
T816016A1S101CEU	89
T816110A1S102CEU	89
T816114A1S102CEU	89
T816116A1S102CEU	89
T816120A1S102CEU	89
T816126A1S102CEU	89
T816134A1S102CEU	89
T821110A1S100CEU	90
T821114A1S100CEU	90
T821116A1S100CEU	90
T821120A1S100CEU	90
T821126A1S100CEU	90
T821134A1S100CEU	90
U65B044010	70
U65B044010T	70
U65B044020T	70
U65B044060	70
U65B044060T	70
U65B045120T	70
U65B124210	70
U65B1242E0T	70
U65E044120T	70
U65E044210T	70
U65E044220	70
U65E044460T	70
U65E045120T	70
U65E124120	70
U65E124464T	70

Part Number	Page number
U65F044360T	70
U77A1118200T	72
U77A16182001	72
U77A21142001	72
U77A26142001	72
U77A41142001	72
U77A46142001	72
U77A61142001	72
U77A66142001	72
U77C11182011	72
U77C21102011	72
U77C41102011	72
U77C61102011	72
U77F16182001	72
U78B112600121	72
U78B412600121	72
UE27-AC54-100	67
UE27-AE54-100	67
UE27-AM54-100	67
UE27-AS54-100	67
UE27-BC54-100	67
UE27-BE54-100	67
UE28-AM54-130	67
UE28-BM54-130	67
UE32-AN0-000	68
UE32-BN0-000	68
UE33-AA1-110	68
UE33-AC1-110	68
UE33-AG1-11A	68
UE66C042130	70
UE66L042120	70
UE66L042130	70
UE66N042120	70
UE66N042130	70
UE75A203000T	72
Ace-tool 1	116
Ace-tool 2	116
Ace-tool 3	116
Ace-tool 4	116
Ace-tool 5	116
Ace-tool 6	116
Ace-tool 7	116
Ace-tool 8	116
Ace-tool 9	116
Ace-tool 10	116
Ace-tool 11	116
M22520/2-01	117
AC-POSITIONER K41	117
ACE-STRIPPING TOOL 1	117
ACE-STRIPPING TOOL 1 BLADE	117
227-1483	117

"Customers should check the relevant outline drawing and pictures before ordering in order to ensure the product selected is suitable for the application intended"

For detailed specifications check
www.amphenolinfocom.eu

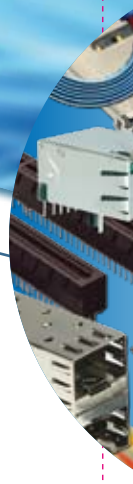

P.O. Box 63, 3990 DB Houten
Hoofdveste 19
3992 DH Houten
The Netherlands
Tel: +31 (0)30 635 8000
Fax: +31 (0)30 637 7899
E-mail: info@amphenol-nl.com
www.amphenolinfocom.eu
2009.01

Компания «ЭлектроПласт» предлагает заключение долгосрочных отношений при поставках импортных электронных компонентов на взаимовыгодных условиях!

Наши преимущества:

- Оперативные поставки широкого спектра электронных компонентов отечественного и импортного производства напрямую от производителей и с крупнейших мировых складов;
- Поставка более 17-ти миллионов наименований электронных компонентов;
- Поставка сложных, дефицитных, либо снятых с производства позиций;
- Оперативные сроки поставки под заказ (от 5 рабочих дней);
- Экспресс доставка в любую точку России;
- Техническая поддержка проекта, помощь в подборе аналогов, поставка прототипов;
- Система менеджмента качества сертифицирована по Международному стандарту ISO 9001;
- Лицензия ФСБ на осуществление работ с использованием сведений, составляющих государственную тайну;
- Поставка специализированных компонентов (Xilinx, Altera, Analog Devices, Intersil, Interpoint, Microsemi, Aeroflex, Peregrine, Syfer, Eurofarad, Texas Instrument, Miteq, Cobham, E2V, MA-COM, Hittite, Mini-Circuits,General Dynamics и др.);

Помимо этого, одним из направлений компании «ЭлектроПласт» является направление «Источники питания». Мы предлагаем Вам помощь Конструкторского отдела:

- Подбор оптимального решения, техническое обоснование при выборе компонента;
- Подбор аналогов;
- Консультации по применению компонента;
- Поставка образцов и прототипов;
- Техническая поддержка проекта;
- Защита от снятия компонента с производства.

Как с нами связаться

Телефон: 8 (812) 309 58 32 (многоканальный)
Факс: 8 (812) 320-02-42
Электронная почта: org@eplast1.ru
Адрес: 198099, г. Санкт-Петербург, ул. Калинина, дом 2, корпус 4, литера А.