maxim integrated™

MAX202E–MAX213E, MAX232E/MAX241E

±15kV ESD-Protected, +5V RS-232 Transceivers

General Description

The MAX202E–MAX213E, MAX232E/MAX241E line drivers/receivers are designed for RS-232 and V.28 communications in harsh environments. Each transmitter output and receiver input is protected against ±15kV electrostatic discharge (ESD) shocks, without latchup. The various combinations of features are outlined in the *Selector Guide.* The drivers and receivers for all ten devices meet all EIA/TIA-232E and CCITT V.28 specifications at data rates up to 120kbps, when loaded in accordance with the EIA/TIA-232E specification.

The MAX211E/MAX213E/MAX241E are available in 28-pin SO packages, as well as a 28-pin SSOP that uses 60% less board space. The MAX202E/MAX232E come in 16-pin TSSOP, narrow SO, wide SO, and DIP packages. The MAX203E comes in a 20-pin DIP/SO package, and needs no external charge-pump capacitors. The MAX205E comes in a 24-pin wide DIP package, and also eliminates external charge-pump capacitors. The MAX206E/MAX207E/MAX208E come in 24-pin SO, SSOP, and narrow DIP packages. The MAX232E/MAX241E operate with four 1µF capacitors, while the MAX202E/MAX206E/MAX207E/MAX208E/MAX211E/MAX213E operate with four 0.1µF capacitors, further reducing cost and board space.

Applications

Notebook, Subnotebook, and Palmtop Computers
Battery-Powered Equipment
Hand-Held Equipment

Next-Generation Device Features

- **For Low-Voltage Applications**
  MAX3222E/MAX3232E/MAX3237E/MAX3241E/MAX3246E: ±15kV ESD-Protected Down to 10nA, +3.0V to +5.5V, Up to 1Mbps, True RS-232 Transceivers (MAX3246E Available in a UCSP™ Package)
- **For Low-Power Applications**
  MAX3221/MAX3223/MAX3243: 1µA Supply Current, True +3V to +5.5V RS-232 Transceivers with Auto-Shutdown™
- **For Space-Constrained Applications**
  MAX3233E/MAX3235E: ±15kV ESD-Protected, 1µA, 250kbps, +3.0V/+5.5V, Dual RS-232 Transceivers with Internal Capacitors
- **For Low-Voltage or Data Cable Applications**
  MAX3380E/MAX3381E: +2.35V to +5.5V, 1µA, 2Tx/2Rx RS-232 Transceivers with ±15kV ESD-Protected I/O and Logic Pins

Ordering Information

PART	TEMP RANGE	PIN-PACKAGE
MAX202ECPE	0°C to +70°C	16 Plastic DIP
MAX202ECSE	0°C to +70°C	16 Narrow SO

Ordering Information continued at end of data sheet.

Pin Configurations and Typical Operating Circuits appear at end of data sheet.

AutoShutdown and UCSP are trademarks of Maxim Integrated Products, Inc.

Selector Guide

PART	NO. OF RS-232 DRIVERS	NO. OF RS-232 RECEIVERS	RECEIVERS ACTIVE IN SHUTDOWN	NO. OF EXTERNAL CAPACITORS (µF)	LOW-POWER SHUTDOWN	TTL TRI-STATE
MAX202E	2	2	0	4 (0.1)	No	No
MAX203E	2	2	0	None	No	No
MAX205E	5	5	0	None	Yes	Yes
MAX206E	4	3	0	4 (0.1)	Yes	Yes
MAX207E	5	3	0	4 (0.1)	No	No
MAX208E	4	4	0	4 (0.1)	No	No
MAX211E	4	5	0	4 (0.1)	Yes	Yes
MAX213E	4	5	2	4 (0.1)	Yes	Yes
MAX232E	2	2	0	4 (1)	No	No
MAX241E	4	5	0	4 (1)	Yes	Yes

For pricing, delivery, and ordering information, please contact Maxim Direct at 1-888-629-4642, or visit Maxim's website at www.maximintegrated.com.

19-0175; Rev 6; 3/05

ABSOLUTE MAXIMUM RATINGS

V_{CC} .....-0.3V to +6V
V+ .....(V_{CC} - 0.3V) to +14V
V- .....-14V to +0.3V
Input Voltages
T_IN .....-0.3V to (V+ + 0.3V)
R_IN .....±30V
Output Voltages
T_OUT.....(V- - 0.3V) to (V+ + 0.3V)
R_OUT .....-0.3V to (V_{CC} + 0.3V)
Short-Circuit Duration, T_OUT.....Continuous
Continuous Power Dissipation (T_A = +70°C)
16-Pin Plastic DIP (derate 10.53mW/°C above +70°C)....842mW
16-Pin Narrow SO (derate 8.70mW/°C above +70°C) 696mW
16-Pin Wide SO (derate 9.52mW/°C above +70°C) 762mW
16-Pin TSSOP (derate 9.4mW/°C above +70°C) 755mW
20-Pin Plastic DIP (derate 11.11mW/°C above +70°C)...889mW
20-Pin SO (derate 10.00mW/°C above +70°C).....800mW
24-Pin Narrow Plastic DIP
(derate 13.33mW/°C above +70°C) 1.07W
24-Pin Wide Plastic DIP
(derate 14.29mW/°C above +70°C).....1.14W
24-Pin SO (derate 11.76mW/°C above +70°C).....941mW
24-Pin SSOP (derate 8.00mW/°C above +70°C) 640mW
28-Pin SO (derate 12.50mW/°C above +70°C).....1W
28-Pin SSOP (derate 9.52mW/°C above +70°C) 762mW
Operating Temperature Ranges
MAX2_ _EC_ _ .....0°C to +70°C
MAX2_ _EE_ _.....-40°C to +85°C
Storage Temperature Range .....-65°C to +165°C
Lead Temperature (soldering, 10s) .....+300°C

Stresses beyond those listed under "Absolute Maximum Ratings" may cause permanent damage to the device. These are stress ratings only, and functional operation of the device at these or any other conditions beyond those indicated in the operational sections of the specifications is not implied. Exposure to absolute maximum rating conditions for extended periods may affect device reliability.

ELECTRICAL CHARACTERISTICS

(V_{CC} = +5V ±10% for MAX202E/206E/208E/211E/213E/232E/241E; V_{CC} = +5V ±5% for MAX203E/205E/207E; C1–C4 = 0.1µF for MAX202E/206E/207E/208E/211E/213E; C1–C4 = 1µF for MAX232E/241E; T_A = T_{MIN} to T_{MAX}; unless otherwise noted. Typical values are at T_A = +25°C.)

PARAMETER	SYMBOL	CONDITIONS		MIN	TYP	MAX	UNITS
DC CHARACTERISTICS							
V_{CC} Supply Current	I_{CC}	No load, T_A = +25°C	MAX202E/203E		8	15	mA
			MAX205E–208E		11	20	
			MAX211E/213E		14	20	
			MAX232E		5	10	
			MAX241E		7	15	
Shutdown Supply Current		T_A = +25°C, Figure 1	MAX205E/206E		1	10	µA
			MAX211E/241E		1	10	
			MAX213E		15	50	
LOGIC							
Input Pullup Current		T_IN = 0V (MAX205E–208E/211E/213E/241E)			15	200	µA
Input Leakage Current		T_IN = 0V to V_{CC} (MAX202E/203E/232E)				±10	µA
Input Threshold Low	V_{IL}	T_IN; EN, $\overline{SHDN}$ (MAX213E) or $\overline{EN}$, SHDN (MAX205E–208E/211E/241E)				0.8	V
Input Threshold High	V_{IH}	T_IN		2.0			V
		EN, $\overline{SHDN}$ (MAX213E) or $\overline{EN}$, SHDN (MAX205E–208E/211E/241E)		2.4			
Output-Voltage Low	V_{OL}	R_OUT; I_{OUT} = 3.2mA (MAX202E/203E/232E) or I_{OUT} = 1.6mA (MAX205E/208E/211E/213E/241E)				0.4	V
Output-Voltage High	V_{OH}	R_OUT; I_{OUT} = -1.0mA		3.5	V_{CC} - 0.4		V
Output Leakage Current		$\overline{EN}$ = V_{CC}, EN = 0V, 0V ≤ R_{OUT} ≤ V_{CC}, MAX205E–208E/211E/213E/241E outputs disabled			±0.05	±10	µA

ELECTRICAL CHARACTERISTICS (continued)

(V_{CC} = +5V ±10% for MAX202E/206E/208E/211E/213E/232E/241E; V_{CC} = +5V ±5% for MAX203E/205E/207E; C1–C4 = 0.1µF for MAX202E/206E/207E/208E/211E/213E; C1–C4 = 1µF for MAX232E/241E; T_A = T_{MIN} to T_{MAX}; unless otherwise noted. Typical values are at T_A = +25°C.)

PARAMETER	SYMBOL	CONDITIONS		MIN	TYP	MAX	UNITS
EIA/TIA-232E RECEIVER INPUTS							
Input Voltage Range				-30		30	V
Input Threshold Low		T_A = +25°C, V_{CC} = 5V	All parts, normal operation	0.8	1.2		V
			MAX213E, $\overline{SHDN}$ = 0V, EN = V_{CC}	0.6	1.5		
Input Threshold High		T_A = +25°C, V_{CC} = 5V	All parts, normal operation		1.7	2.4	V
			MAX213E (R4, R5), $\overline{SHDN}$ = 0V, EN = V_{CC}		1.5	2.4	
Input Hysteresis		V_{CC} = 5V, no hysteresis in shutdown		0.2	0.5	1.0	V
Input Resistance		T_A = +25°C, V_{CC} = 5V		3	5	7	kΩ
EIA/TIA-232E TRANSMITTER OUTPUTS							
Output Voltage Swing		All drivers loaded with 3kΩ to ground (Note 1)		±5	±9		V
Output Resistance		V_{CC} = V+ = V- = 0V, V_{OUT} = ±2V		300			Ω
Output Short-Circuit Current					±10	±60	mA
TIMING CHARACTERISTICS							
Maximum Data Rate		R_L = 3kΩ to 7kΩ, C_L = 50pF to 1000pF, one transmitter switching		120			kbps
Receiver Propagation Delay	t_{PLHR}, t_{PHLR}	C_L = 150pF	All parts, normal operation		0.5	10	µs
			MAX213E (R4, R5), $\overline{SHDN}$ = 0V, EN = V_{CC}		4	40	
Receiver Output Enable Time		MAX205E/206E/211E/213E/241E normal operation, Figure 2			600		ns
Receiver Output Disable Time		MAX205E/206E/211E/213E/241E normal operation, Figure 2			200		ns
Transmitter Propagation Delay	t_{PLHT}, t_{PHLT}	R_L = 3kΩ, C_L = 2500pF, all transmitters loaded			2		µs
Transition-Region Slew Rate		T_A = +25°C, V_{CC} = 5V, R_L = 3kΩ to 7kΩ, C_L = 50pF to 1000pF, measured from -3V to +3V or +3V to -3V, Figure 3		3	6	30	V/µs
ESD PERFORMANCE: TRANSMITTER OUTPUTS, RECEIVER INPUTS							
ESD-Protection Voltage		Human Body Model			±15		kV
		IEC1000-4-2, Contact Discharge			±8		
		IEC1000-4-2, Air-Gap Discharge			±15		

Note 1: MAX211EE_ _ tested with V_{CC} = +5V ±5%.

Typical Operating Characteristics

(Typical Operating Circuits, V_{CC} = +5V, T_A = +25°C, unless otherwise noted.)

MAX232E
TRANSMITTER OUTPUT VOLTAGE
vs. LOAD CAPACITANCE

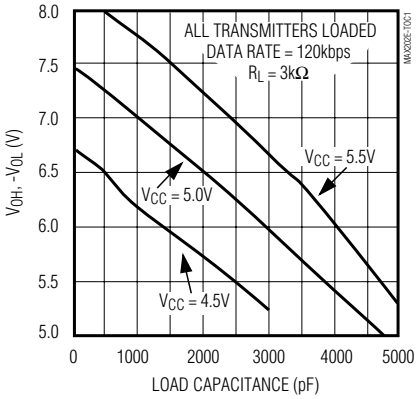

MAX202E/MAX203E
TRANSMITTER OUTPUT VOLTAGE
vs. LOAD CAPACITANCE

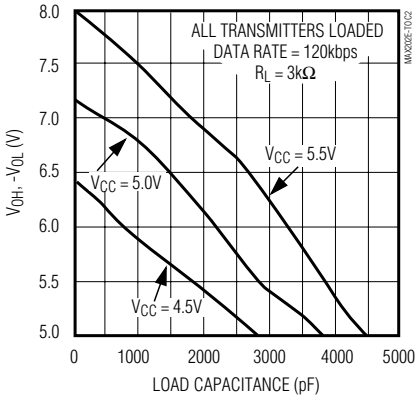

MAX241E
TRANSMITTER OUTPUT VOLTAGE
vs. LOAD CAPACITANCE

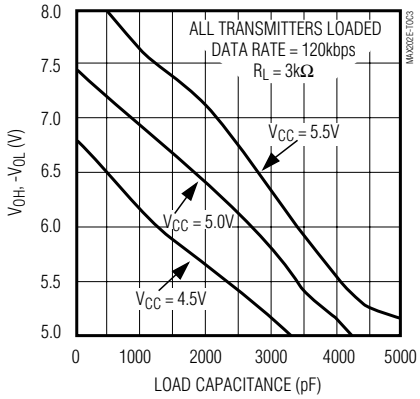

MAX211E/MAX213E
TRANSMITTER OUTPUT VOLTAGE
vs. LOAD CAPACITANCE

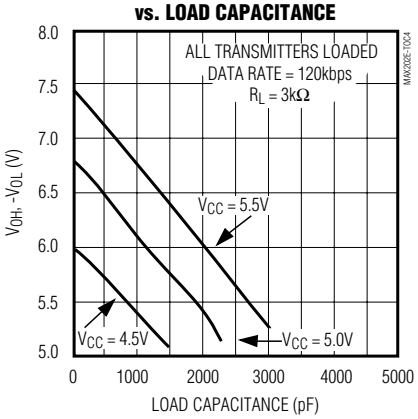

MAX211E/MAX213E/MAX241E
TRANSMITTER SLEW RATE
vs. LOAD CAPACITANCE

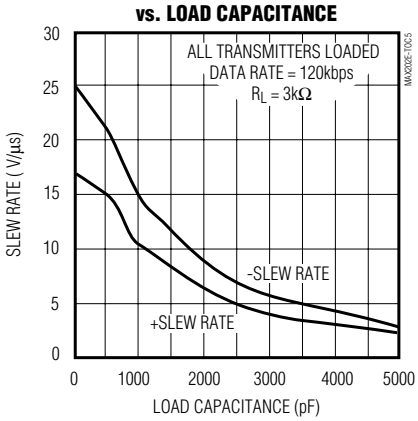

Typical Operating Characteristics (continued)

(Typical Operating Circuits, V_{CC} = +5V, T_A = +25°C, unless otherwise noted.)

MAX202E/MAX203E/MAX232E TRANSMITTER SLEW RATE vs. LOAD CAPACITANCE

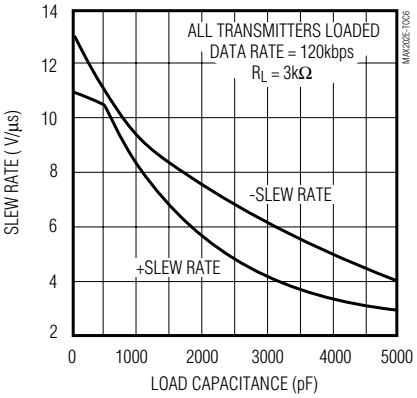

MAX205E–MAX208E TRANSMITTER OUTPUT VOLTAGE vs. LOAD CAPACITANCE

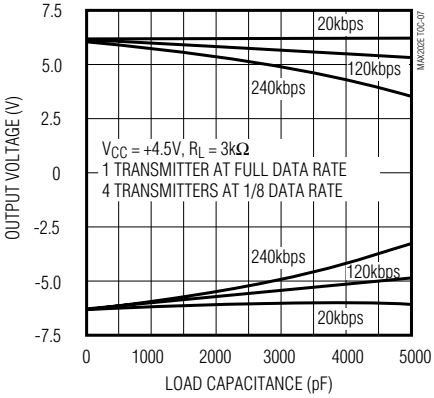

MAX205E–MAX208E TRANSMITTER SLEW RATE vs. LOAD CAPACITANCE

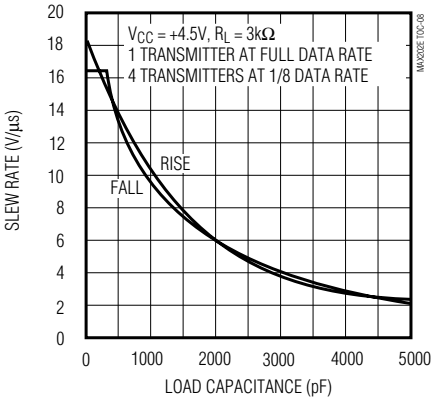

MAX205E–MAX208E SUPPLY CURRENT vs. LOAD CAPACITANCE

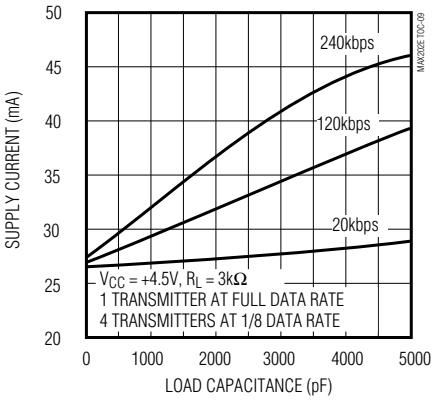

MAX205E–MAX208E OUTPUT VOLTAGE vs. DATA RATE

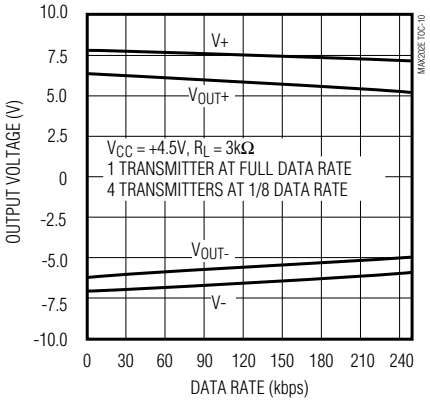

Pin Descriptions

MAX202E/MAX232E

PIN		NAME	FUNCTION
DIP/SO/TSSOP	LCC		
1, 3	2, 4	C1+, C1-	Terminals for Positive Charge-Pump Capacitor
2	3	V+	$+2V_{CC}$ Voltage Generated by the Charge Pump
4, 5	5, 7	C2+, C2-	Terminals for Negative Charge-Pump Capacitor
6	8	V-	$-2V_{CC}$ Voltage Generated by the Charge Pump
7, 14	9, 18	T_OUT	RS-232 Driver Outputs
8, 13	10, 17	R_IN	RS-232 Receiver Inputs
9, 12	12, 15	R_OUT	RS-232 Receiver Outputs
10, 11	13, 14	T_IN	RS-232 Driver Inputs
15	19	GND	Ground
16	20	V_{CC}	+4.5V to +5.5V Supply-Voltage Input
—	1, 6, 11, 16	N.C.	No Connection—Not Internally Connected

MAX203E

PIN		NAME	FUNCTION
DIP	SO		
1, 2	1, 2	T_IN	RS-232 Driver Inputs
3, 20	3, 20	R_OUT	RS-232 Receiver Outputs
4,19	4, 19	R_IN	RS-232 Receiver Inputs
5,18	5, 18	T_OUT	RS-232 Transmitter Outputs
6, 9	6, 9	GND	Ground
7	7	V_{CC}	+4.5V to +5.5V Supply-Voltage Input
8	13	C1+	Make no connection to this pin.
10, 16	11, 16	C2-	Connect pins together.
12, 17	10, 17	V-	$-2V_{CC}$ Voltage Generated by the Charge Pump. Connect pins together.
13	14	C1-	Make no connection to this pin.
14	8	V+	$+2V_{CC}$ Voltage Generated by the Charge Pump
11, 15	12, 15	C2+	Connect pins together.

MAX205E

PIN	NAME	FUNCTION
1–4, 19	T_OUT	RS-232 Driver Outputs
5, 10, 13, 18, 24	R_IN	RS-232 Receiver Inputs
6, 9, 14, 17, 23	R_OUT	TTL/CMOS Receiver Outputs. All receivers are inactive in shutdown.
7, 8, 15, 16, 22	T_IN	TTL/CMOS Driver Inputs. Internal pullups to V_{CC}.
11	GND	Ground
12	V_{CC}	+4.75V to +5.25V Supply Voltage
20	$\overline{EN}$	Receiver Enable—Active Low
21	SHDN	Shutdown Control—Active High

Pin Descriptions (continued)

MAX206E

PIN	NAME	FUNCTION
1, 2, 3, 24	T_OUT	RS-232 Driver Outputs
4, 16, 23	R_IN	RS-232 Receiver Inputs
5, 17, 22	R_OUT	TTL/CMOS Receiver Outputs. All receivers are inactive in shutdown.
6, 7, 18, 19	T_IN	TTL/CMOS Driver Inputs. Internal pullups to V_{CC}.
8	GND	Ground
9	V_{CC}	+4.5V to +5.5V Supply Voltage
10, 12	C1+, C1-	Terminals for Positive Charge-Pump Capacitor
11	V+	$+2V_{CC}$ Generated by the Charge Pump
13, 14	C2+, C2-	Terminals for Negative Charge-Pump Capacitor
15	V-	$-2V_{CC}$ Generated by the Charge Pump
20	$\overline{EN}$	Receiver Enable—Active Low
21	SHDN	Shutdown Control—Active High

MAX207E

PIN	NAME	FUNCTION
1, 2, 3, 20, 24	T_OUT	RS-232 Driver Outputs
4, 16, 23	R_IN	RS-232 Receiver Inputs
5, 17, 22	R_OUT	TTL/CMOS Receiver Outputs. All receivers are inactive in shutdown.
6, 7, 18, 19, 21	T_IN	TTL/CMOS Driver Inputs. Internal pullups to V_{CC}.
8	GND	Ground
9	V_{CC}	+4.75V to +5.25V Supply Voltage
10, 12	C1+, C1-	Terminals for Positive Charge-Pump Capacitor
11	V+	$+2V_{CC}$ Generated by the Charge Pump
13, 14	C2+, C2-	Terminals for Negative Charge-Pump Capacitor
15	V-	$-2V_{CC}$ Generated by the Charge Pump

MAX208E

PIN	NAME	FUNCTION
1, 2, 20, 24	T_OUT	RS-232 Driver Outputs
3, 7, 16, 23	R_IN	RS-232 Receiver Inputs
4, 6, 17, 22	R_OUT	TTL/CMOS Receiver Outputs. All receivers are inactive in shutdown.
5, 18, 19, 21	T_IN	TTL/CMOS Driver Inputs. Internal pullups to V_{CC}.
8	GND	Ground
9	V_{CC}	+4.5V to +5.5V Supply Voltage
10, 12	C1+, C1-	Terminals for Positive Charge-Pump Capacitor
11	V+	$+2V_{CC}$ Generated by the Charge Pump
13, 14	C2+, C2-	Terminals for Negative Charge-Pump Capacitor
15	V-	$-2V_{CC}$ Generated by the Charge Pump

Pin Descriptions (continued)

MAX211E/MAX213E/MAX241E

PIN	NAME	FUNCTION
1, 2, 3, 28	T_OUT	RS-232 Driver Outputs
4, 9, 18, 23, 27	R_IN	RS-232 Receiver Inputs
5, 8, 19, 22, 26	R_OUT	TTL/CMOS Receiver Outputs. For the MAX213E, receivers R4 and R5 are active in shutdown mode when EN = 1. For the MAX211E and MAX241E, all receivers are inactive in shutdown.
6, 7, 20, 21	T_IN	TTL/CMOS Driver Inputs. Only the MAX211E, MAX213E, and MAX241E have internal pullups to V_{CC}.
10	GND	Ground
11	V_{CC}	+4.5V to +5.5V Supply Voltage
12, 14	C1+, C1-	Terminals for Positive Charge-Pump Capacitor
13	V+	$+2V_{CC}$ Voltage Generated by the Charge Pump
15, 16	C2+, C2-	Terminals for Negative Charge-Pump Capacitor
17	V-	$-2V_{CC}$ Voltage Generated by the Charge Pump
24	$\overline{EN}$	Receiver Enable—Active Low (MAX211E, MAX241E)
	EN	Receiver Enable—Active High (MAX213E)
25	SHDN	Shutdown Control—Active High (MAX211E, MAX241E)
	$\overline{SHDN}$	Shutdown Control—Active Low (MAX213E)

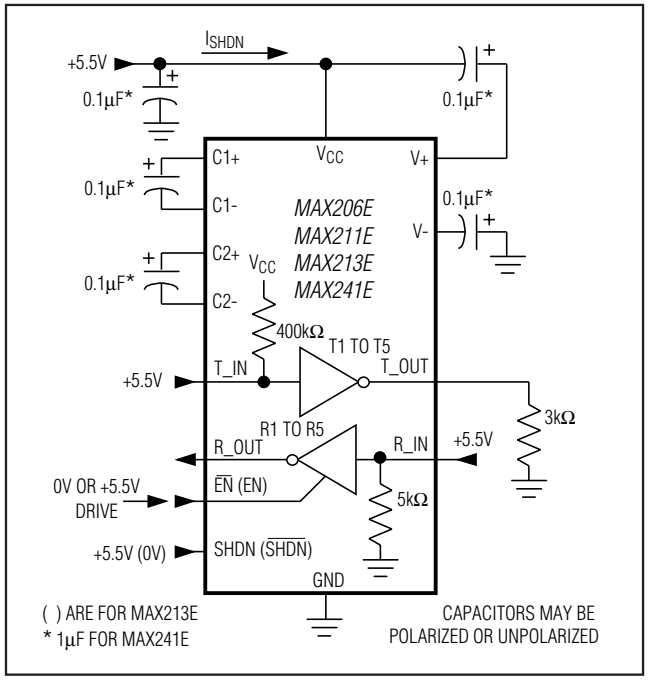

Figure 1. Shutdown-Current Test Circuit (MAX206E, MAX211E/MAX213E/MAX241E)

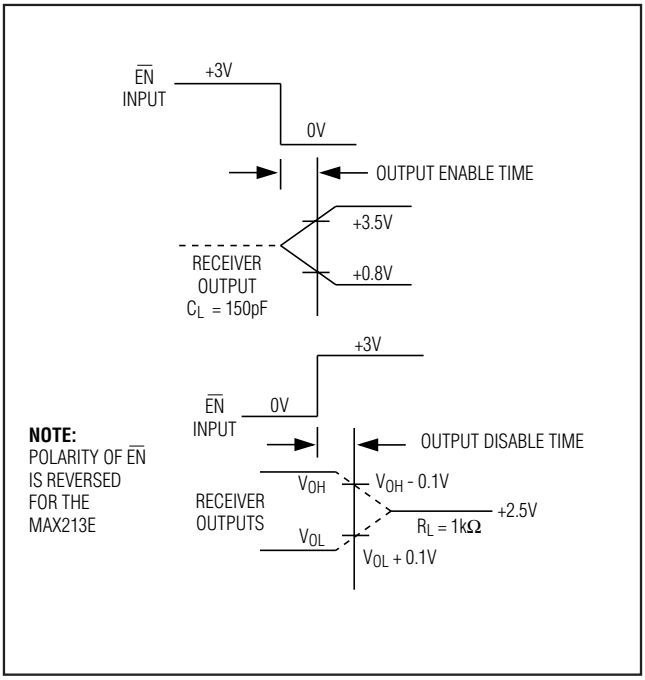

Figure 2. Receiver Output Enable and Disable Timing (MAX205E/MAX206E/MAX211E/MAX213E/MAX241E)

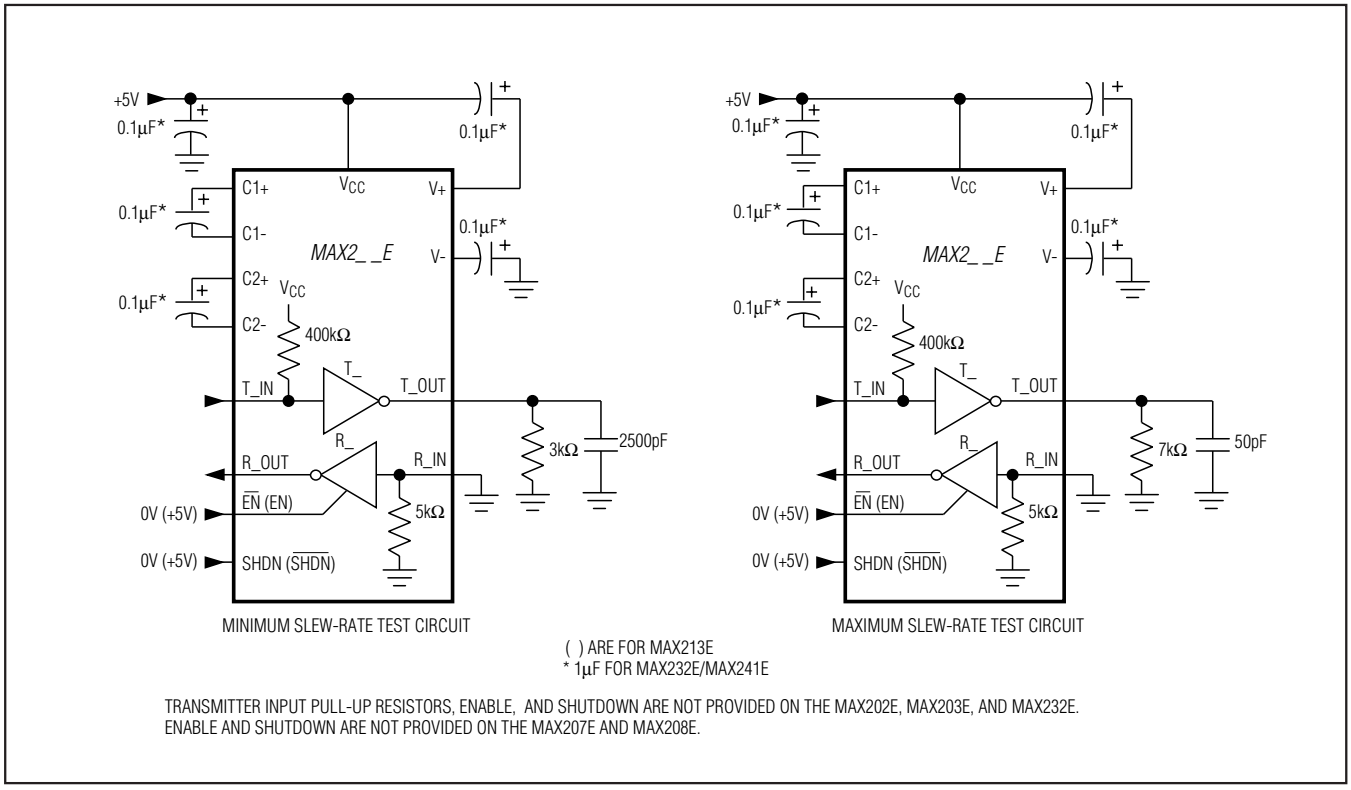

Figure 3. Transition Slew-Rate Circuit

Detailed Description

The MAX202E–MAX213E, MAX232E/MAX241E consist of three sections: charge-pump voltage converters, drivers (transmitters), and receivers. These E versions provide extra protection against ESD. They survive ±15kV discharges to the RS-232 inputs and outputs, tested using the Human Body Model. When tested according to IEC1000-4-2, they survive ±8kV contact-discharges and ±15kV air-gap discharges. The rugged E versions are intended for use in harsh environments or applications where the RS-232 connection is frequently changed (such as notebook computers). The standard (non-"E") MAX202, MAX203, MAX205–MAX208, MAX211, MAX213, MAX232, and MAX241 are recommended for applications where cost is critical.

+5V to ±10V Dual Charge-Pump Voltage Converter

The +5V to ±10V conversion is performed by dual charge-pump voltage converters (Figure 4). The first charge-pump converter uses capacitor C1 to double the +5V into +10V, storing the +10V on the output filter capacitor, C3. The second uses C2 to invert the +10V into -10V, storing the -10V on the V- output filter capacitor, C4.

In shutdown mode, V+ is internally connected to V_{CC} by a 1kΩ pull-down resistor, and V- is internally connected to ground by a 1kΩ pull up resistor.

RS-232 Drivers

With V_{CC} = 5V, the typical driver output voltage swing is ±8V when loaded with a nominal 5kΩ RS-232 receiver. The output swing is guaranteed to meet EIA/TIA-232E and V.28 specifications that call for ±5V minimum output levels under worst-case conditions. These include a 3kΩ load, minimum V_{CC}, and maximum operating temperature. The open-circuit output voltage swings from (V+ - 0.6V) to V-.

Input thresholds are CMOS/TTL compatible. The unused drivers' inputs on the MAX205E–MAX208E, MAX211E, MAX213E, and MAX241E can be left unconnected because 400kΩ pull up resistors to V_{CC} are included on-chip. Since all drivers invert, the pull up resistors force the unused drivers' outputs low. The MAX202E, MAX203E, and MAX232E do not have pull up resistors on the transmitter inputs.

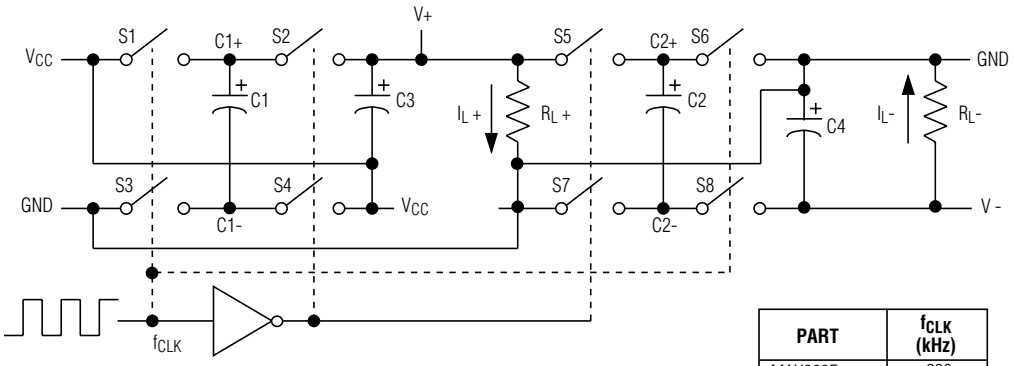

PART	f_{CLK} (kHz)
MAX202E	230
MAX203E	230
MAX205E–208E	200
MAX211E/213E	200
MAX232E	140
MAX241E	30

Figure 4. Charge-Pump Diagram

When in low-power shutdown mode, the MAX205E/MAX206E/MAX211E/MAX213E/MAX241E driver outputs are turned off and draw only leakage currents—even if they are back-driven with voltages between 0V and 12V. Below -0.5V in shutdown, the transmitter output is diode-clamped to ground with a 1kΩ series impedance.

RS-232 Receivers

The receivers convert the RS-232 signals to CMOS-logic output levels. The guaranteed 0.8V and 2.4V receiver input thresholds are significantly tighter than the ±3V thresholds required by the EIA/TIA-232E specification. This allows the receiver inputs to respond to TTL/CMOS-logic levels, as well as RS-232 levels.

The guaranteed 0.8V input low threshold ensures that receivers shorted to ground have a logic 1 output. The 5kΩ input resistance to ground ensures that a receiver with its input left open will also have a logic 1 output.

Receiver inputs have approximately 0.5V hysteresis. This provides clean output transitions, even with slow rise/fall-time signals with moderate amounts of noise and ringing.

In shutdown, the MAX213E's R4 and R5 receivers have no hysteresis.

Shutdown and Enable Control (MAX205E/MAX206E/MAX211E/MAX213E/MAX241E)

In shutdown mode, the charge pumps are turned off, V+ is pulled down to V_{CC}, V- is pulled to ground, and the transmitter outputs are disabled. This reduces supply current typically to 1µA (15µA for the MAX213E). The time required to exit shutdown is under 1ms, as shown in Figure 5.

Receivers

All MAX213E receivers, except R4 and R5, are put into a high-impedance state in shutdown mode (see Tables 1a and 1b). The MAX213E's R4 and R5 receivers still function in shutdown mode. These two awake-in-shutdown receivers can monitor external activity while maintaining minimal power consumption.

The enable control is used to put the receiver outputs into a high-impedance state, to allow wire-OR connection of two EIA/TIA-232E ports (or ports of different types) at the UART. It has no effect on the RS-232 drivers or the charge pumps.

Note: The enable control pin is active low for the MAX211E/MAX241E ($\overline{EN}$), but is active high for the MAX213E (EN). The shutdown control pin is active high for the MAX205E/MAX206E/MAX211E/MAX241E (SHDN), but is active low for the MAX213E ($\overline{SHDN}$).

The MAX213E's receiver propagation delay is typically 0.5µs in normal operation. In shutdown mode, propagation delay increases to 4µs for both rising and falling transitions. The MAX213E's receiver inputs have approximately 0.5V hysteresis, except in shutdown, when receivers R4 and R5 have no hysteresis.

When entering shutdown with receivers active, R4 and R5 are not valid until 80µs after $\overline{SHDN}$ is driven low. When coming out of shutdown, all receiver outputs are invalid until the charge pumps reach nominal voltage levels (less than 2ms when using 0.1µF capacitors).

±15kV ESD Protection

As with all Maxim devices, ESD-protection structures are incorporated on all pins to protect against electrostatic discharges encountered during handling and assembly. The driver outputs and receiver inputs have extra protection against static electricity. Maxim's engineers developed state-of-the-art structures to protect these pins against ESD of ±15kV without damage. The ESD structures withstand high ESD in all states: normal operation, shutdown, and powered down. After an ESD event, Maxim's E versions keep working without latchup, whereas competing RS-232 products can latch and must be powered down to remove latchup.

ESD protection can be tested in various ways; the transmitter outputs and receiver inputs of this product family are characterized for protection to the following limits:

1) ±15kV using the Human Body Model
2) ±8kV using the contact-discharge method specified in IEC1000-4-2
3) ±15kV using IEC1000-4-2's air-gap method.

ESD Test Conditions

ESD performance depends on a variety of conditions. Contact Maxim for a reliability report that documents test set-up, test methodology, and test results.

Human Body Model

Figure 6a shows the Human Body Model, and Figure 6b shows the current waveform it generates when discharged into a low impedance. This model consists of a 100pF capacitor charged to the ESD voltage of interest, which is then discharged into the test device through a 1.5kΩ resistor.

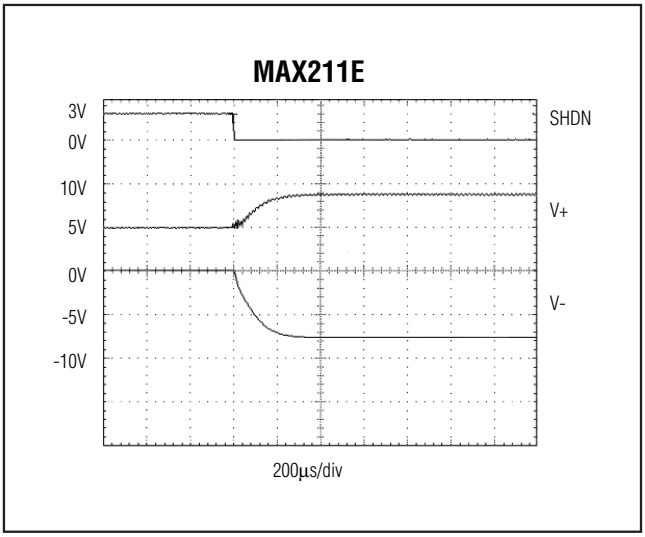

Figure 5. MAX211E V+ and V- when Exiting Shutdown (0.1µF capacitors)

Table 1a. MAX205E/MAX206E/MAX211E/ MAX241E Control Pin Configurations

SHDN	$\overline{EN}$	OPERATION STATUS	Tx	Rx
0	0	Normal Operation	All Active	All Active
0	1	Normal Operation	All Active	All High-Z
1	X	Shutdown	All High-Z	All High-Z

X = Don't care.

Table 1b. MAX213E Control Pin Configurations

$\overline{SHDN}$	EN	OPERATION STATUS	Tx 1–4	Rx	
				1–3	4, 5
0	0	Shutdown	All High-Z	High-Z	High-Z
0	1	Shutdown	All High-Z	High-Z	Active*
1	0	Normal Operation	All Active	High-Z	High-Z
1	1	Normal Operation	All Active	Active	Active

**Active = active with reduced performance*

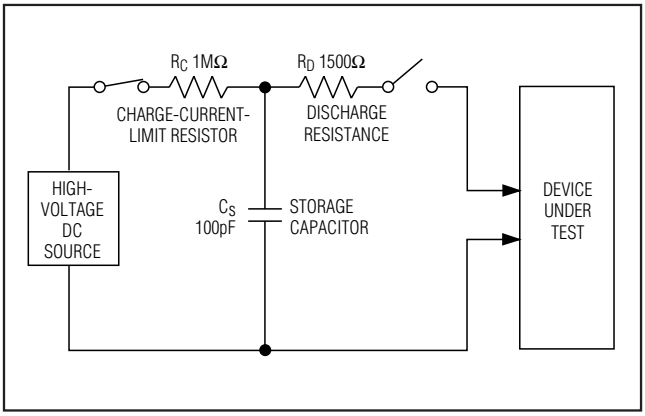

Figure 6a. Human Body ESD Test Model

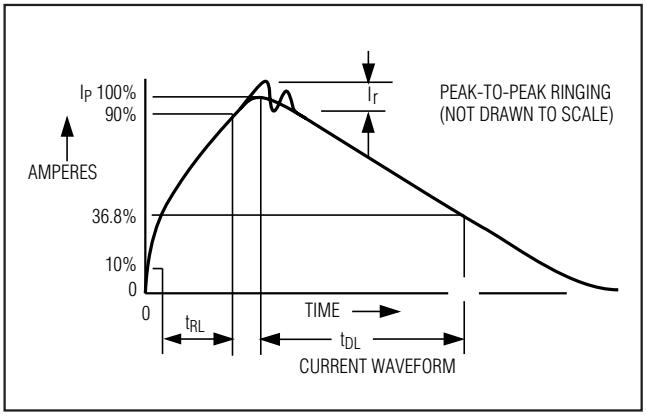

Figure 6b. Human Body Model Current Waveform

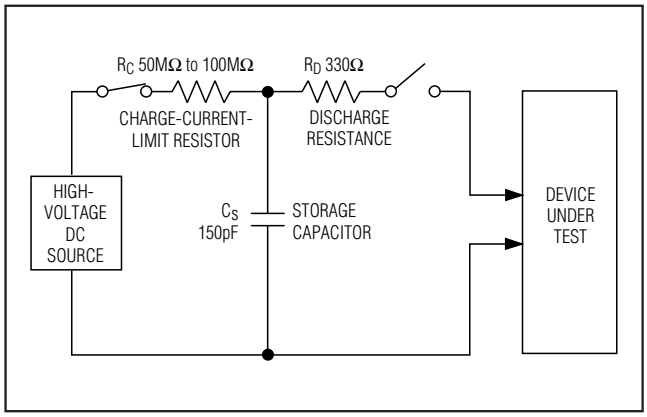

Figure 7a. IEC1000-4-2 ESD Test Model

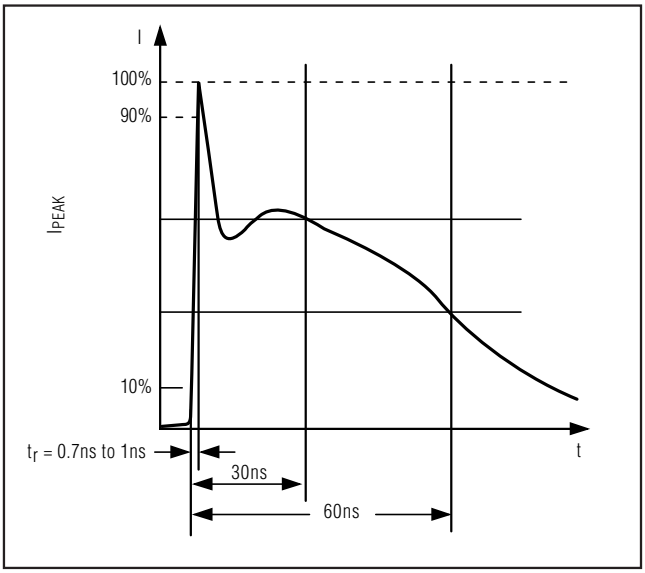

Figure 7b. IEC1000-4-2 ESD Generator Current Waveform

IEC1000-4-2

The IEC1000-4-2 standard covers ESD testing and performance of finished equipment; it does not specifically refer to integrated circuits. The MAX202E/MAX203E–MAX213E, MAX232E/MAX241E help you design equipment that meets level 4 (the highest level) of IEC1000-4-2, without the need for additional ESD-protection components.

The major difference between tests done using the Human Body Model and IEC1000-4-2 is higher peak current in IEC1000-4-2, because series resistance is lower in the IEC1000-4-2 model. Hence, the ESD withstand voltage measured to IEC1000-4-2 is generally lower than that measured using the Human Body Model. Figure 7b shows the current waveform for the 8kV IEC1000-4-2 level-four ESD contact-discharge test.

The air-gap test involves approaching the device with a charged probe. The contact-discharge method connects the probe to the device before the probe is energized.

Machine Model

The Machine Model for ESD tests all pins using a 200pF storage capacitor and zero discharge resistance. Its objective is to emulate the stress caused by contact that occurs with handling and assembly during manufacturing. Of course, all pins require this protection during manufacturing, not just RS-232 inputs and outputs. Therefore, after PC board assembly, the Machine Model is less relevant to I/O ports.

Applications Information

Capacitor Selection

The capacitor type used for C1–C4 is not critical for proper operation. The MAX202E, MAX206–MAX208E, MAX211E, and MAX213E require 0.1µF capacitors, and the MAX232E and MAX241E require 1µF capacitors, although in all cases capacitors up to 10µF can be used without harm. Ceramic, aluminum-electrolytic, or tantalum capacitors are suggested for the 1µF capacitors, and ceramic dielectrics are suggested for the 0.1µF capacitors. When using the minimum recommended capacitor values, make sure the capacitance value does not degrade excessively as the operating temperature varies. If in doubt, use capacitors with a larger (e.g., 2x) nominal value. The capacitors' effective series resistance (ESR), which usually rises at low temperatures, influences the amount of ripple on V+ and V-.

Use larger capacitors (up to 10µF) to reduce the output impedance at V+ and V-. This can be useful when "stealing" power from V+ or from V-. The MAX203E and MAX205E have internal charge-pump capacitors.

Bypass V_{CC} to ground with at least 0.1µF. In applications sensitive to power-supply noise generated by the charge pumps, decouple V_{CC} to ground with a capacitor the same size as (or larger than) the charge-pump capacitors (C1–C4).

V+ and V- as Power Supplies

A small amount of power can be drawn from V+ and V-, although this will reduce both driver output swing and noise margins. Increasing the value of the charge-pump capacitors (up to 10µF) helps maintain performance when power is drawn from V+ or V-.

Driving Multiple Receivers

Each transmitter is designed to drive a single receiver. Transmitters can be paralleled to drive multiple receivers.

Driver Outputs when Exiting Shutdown

The driver outputs display no ringing or undesirable transients as they come out of shutdown.

High Data Rates

These transceivers maintain the RS-232 ±5.0V minimum driver output voltages at data rates of over 120kbps. For data rates above 120kbps, refer to the Transmitter Output Voltage vs. Load Capacitance graphs in the *Typical Operating Characteristics*. Communication at these high rates is easier if the capacitive loads on the transmitters are small; i.e., short cables are best.

Table 2. Summary of EIA/TIA-232E, V.28 Specifications

PARAMETER		CONDITIONS	EIA/TIA-232E, V.28 SPECIFICATIONS
Driver Output Voltage	0 Level	3kΩ to 7kΩ load	+5V to +15V
	1 Level	3kΩ to 7kΩ load	-5V to -15V
Driver Output Level, Max		No load	±25V
Data Rate		3kΩ ≤ R_L ≤ 7kΩ, C_L ≤ 2500pF	Up to 20kbps
Receiver Input Voltage	0 Level		+3V to +15V
	1 Level		-3V to -15V
Receiver Input Level			±25V
Instantaneous Slew Rate, Max		3kΩ ≤ R_L ≤ 7kΩ, C_L ≤ 2500pF	30V/µs
Driver Output Short-Circuit Current, Max			100mA
Transition Rate on Driver Output		V.28	1ms or 3% of the period
		EIA/TIA-232E	4% of the period
Driver Output Resistance		-2V < V_{OUT} < +2V	300Ω

Table 3. DB9 Cable Connections Commonly Used for EIA/TIA-232E and V.24 Asynchronous Interfaces

PIN	CONNECTION	
1	Received Line Signal Detector (sometimes called Carrier Detect, DCD)	Handshake from DCE
2	Receive Data (RD)	Data from DCE
3	Transmit Data (TD)	Data from DTE
4	Data Terminal Ready	Handshake from DTE
5	Signal Ground	Reference point for signals
6	Data Set Ready (DSR)	Handshake from DCE
7	Request to Send (RTS)	Handshake from DTE
8	Clear to Send (CTS)	Handshake from DCE
9	Ring Indicator	Handshake from DCE

Pin Configurations and Typical Operating Circuits (continued)

TOP VIEW

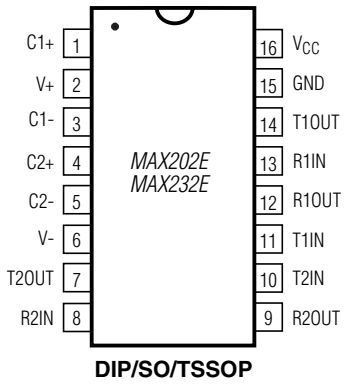

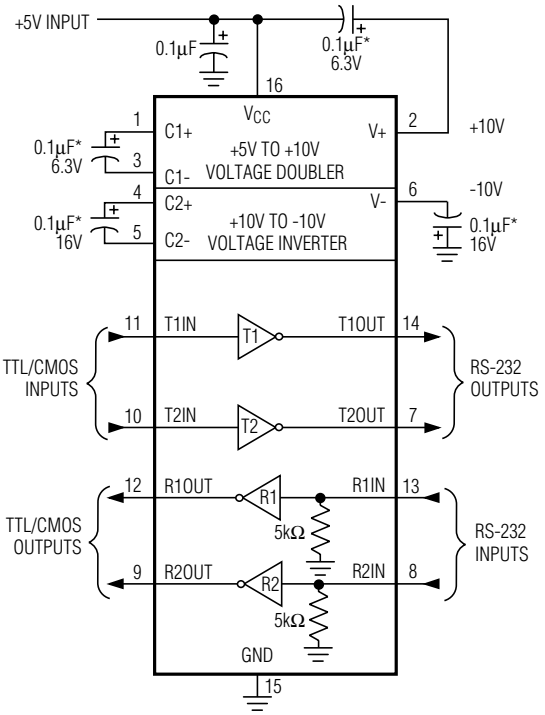

PIN NUMBERS ON TYPICAL OPERATING CIRCUIT REFER TO DIP/SO/TSSOP PACKAGE, NOT LCC.
* 1.0µF CAPACITORS, MAX232E ONLY.

Pin Configurations and Typical Operating Circuits (continued)

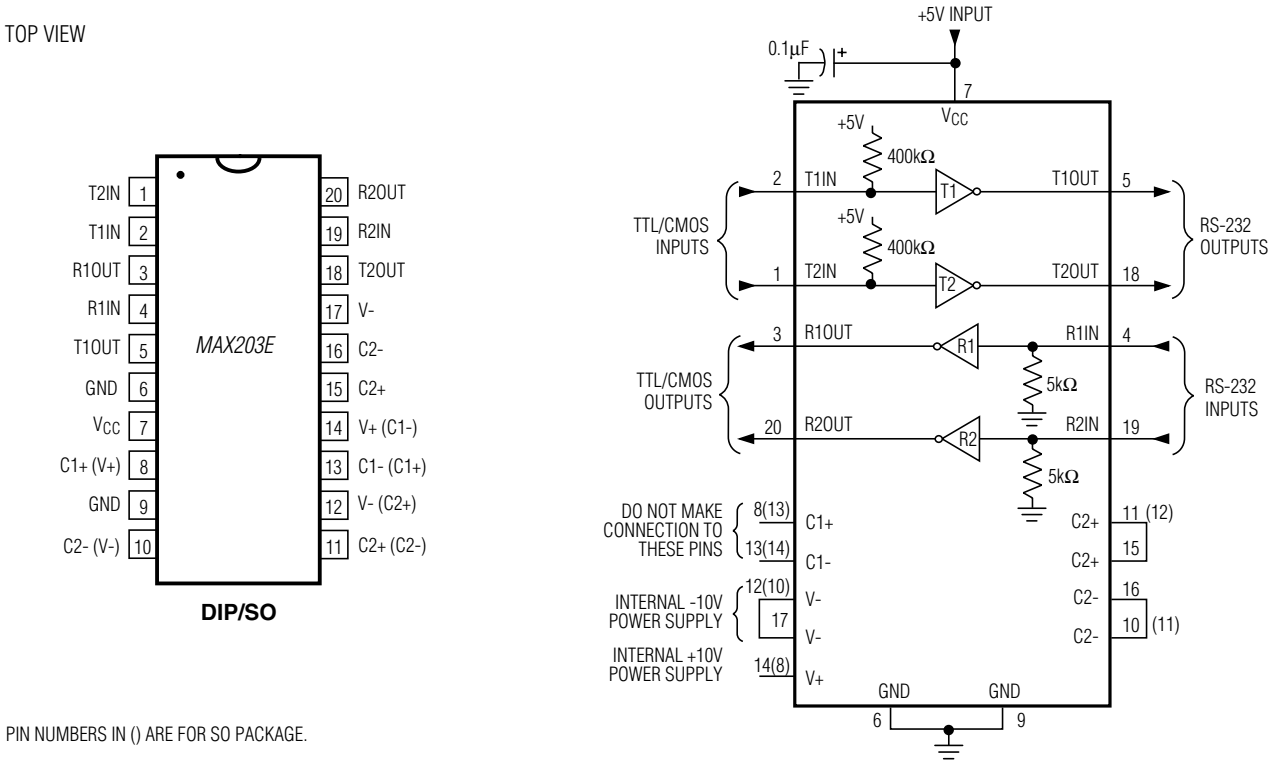

Pin Configurations and Typical Operating Circuits (continued)

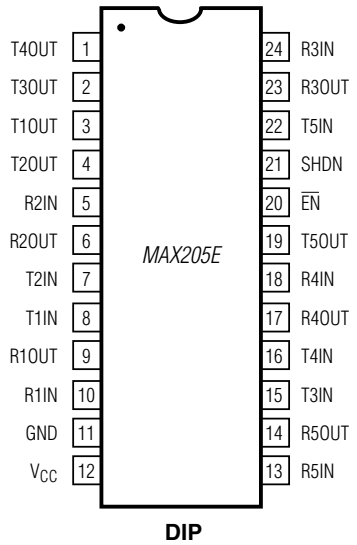

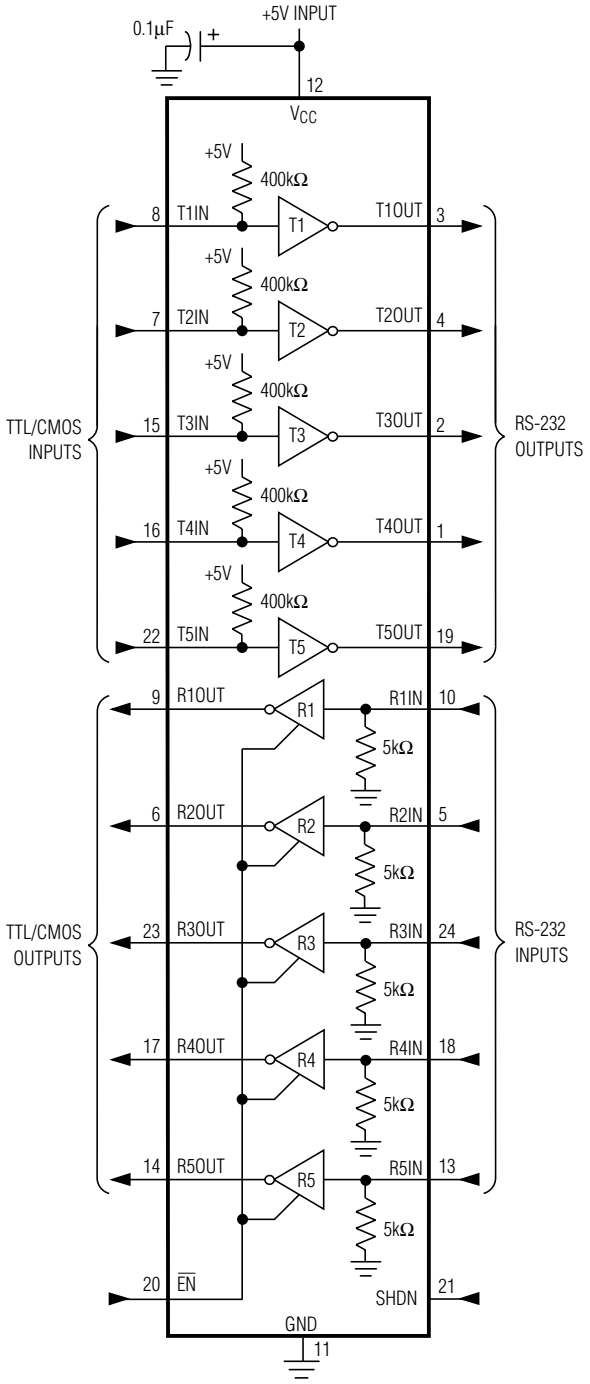

Pin Configurations and Typical Operating Circuits (continued)

TOP VIEW

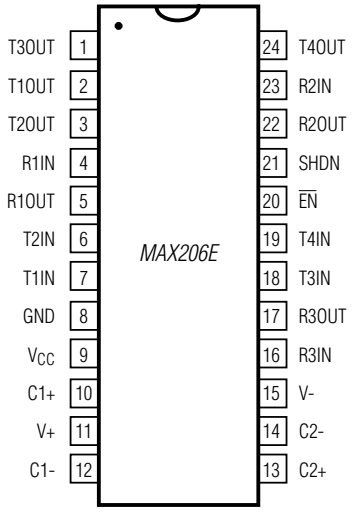

DIP/SO/SSOP

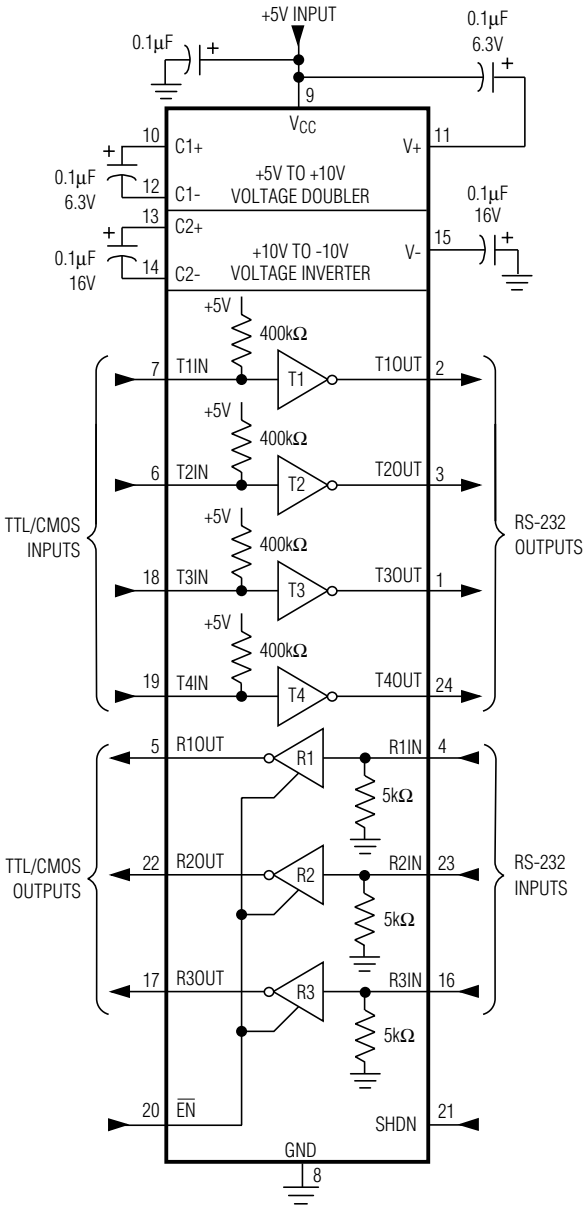

Pin Configurations and Typical Operating Circuits (continued)

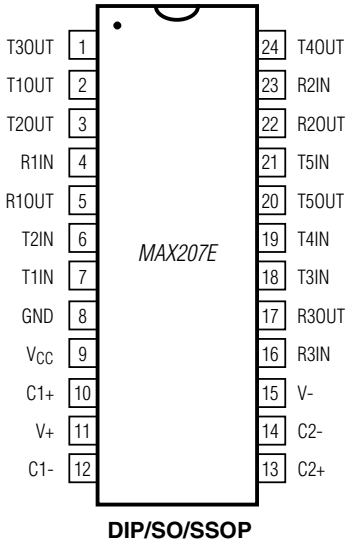

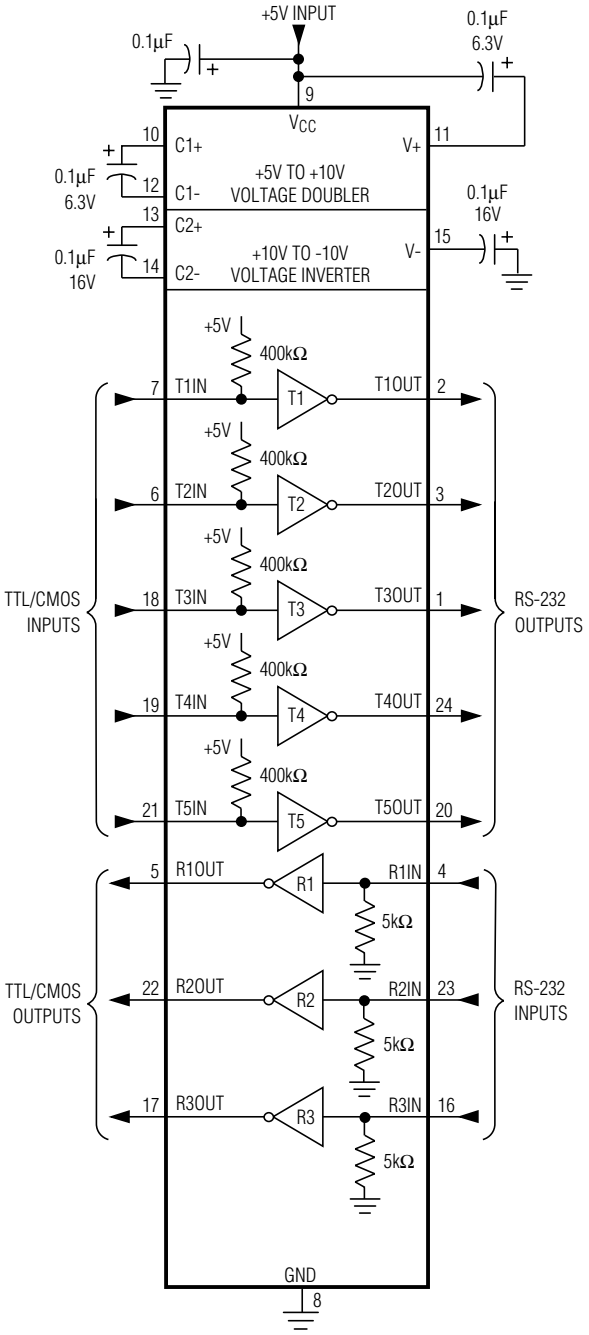

Pin Configurations and Typical Operating Circuits (continued)

TOP VIEW

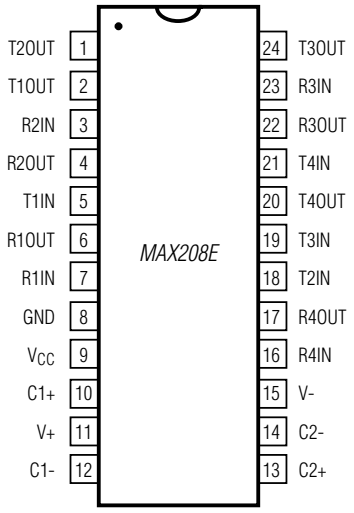

DIP/SO/SSOP

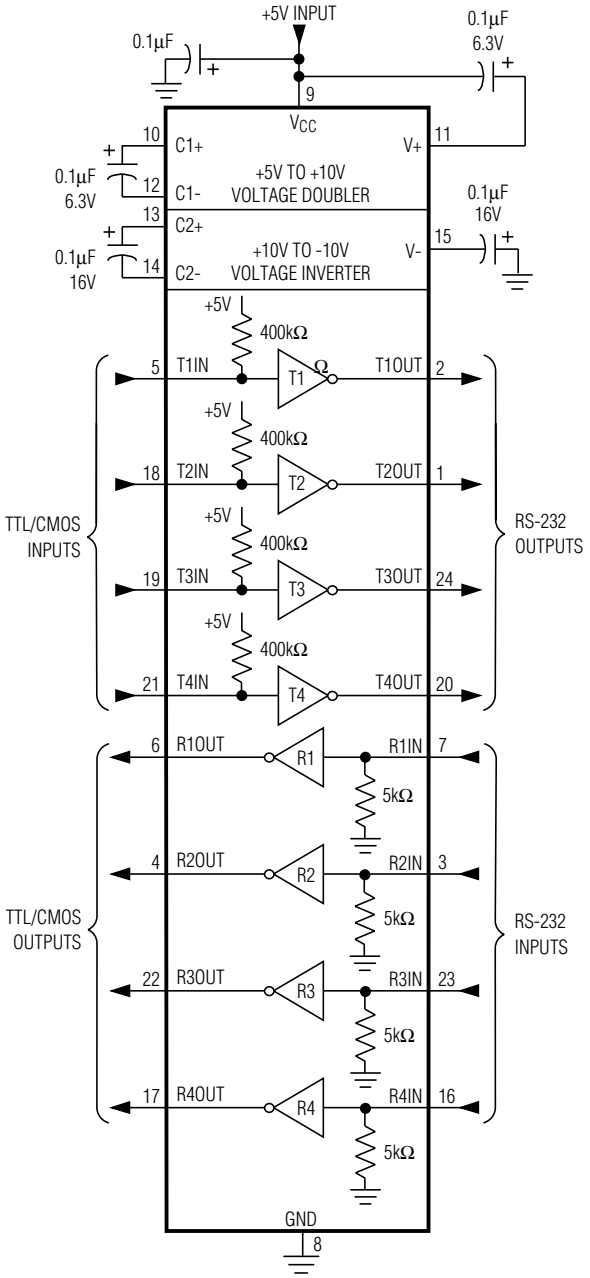

Pin Configurations and Typical Operating Circuits (continued)

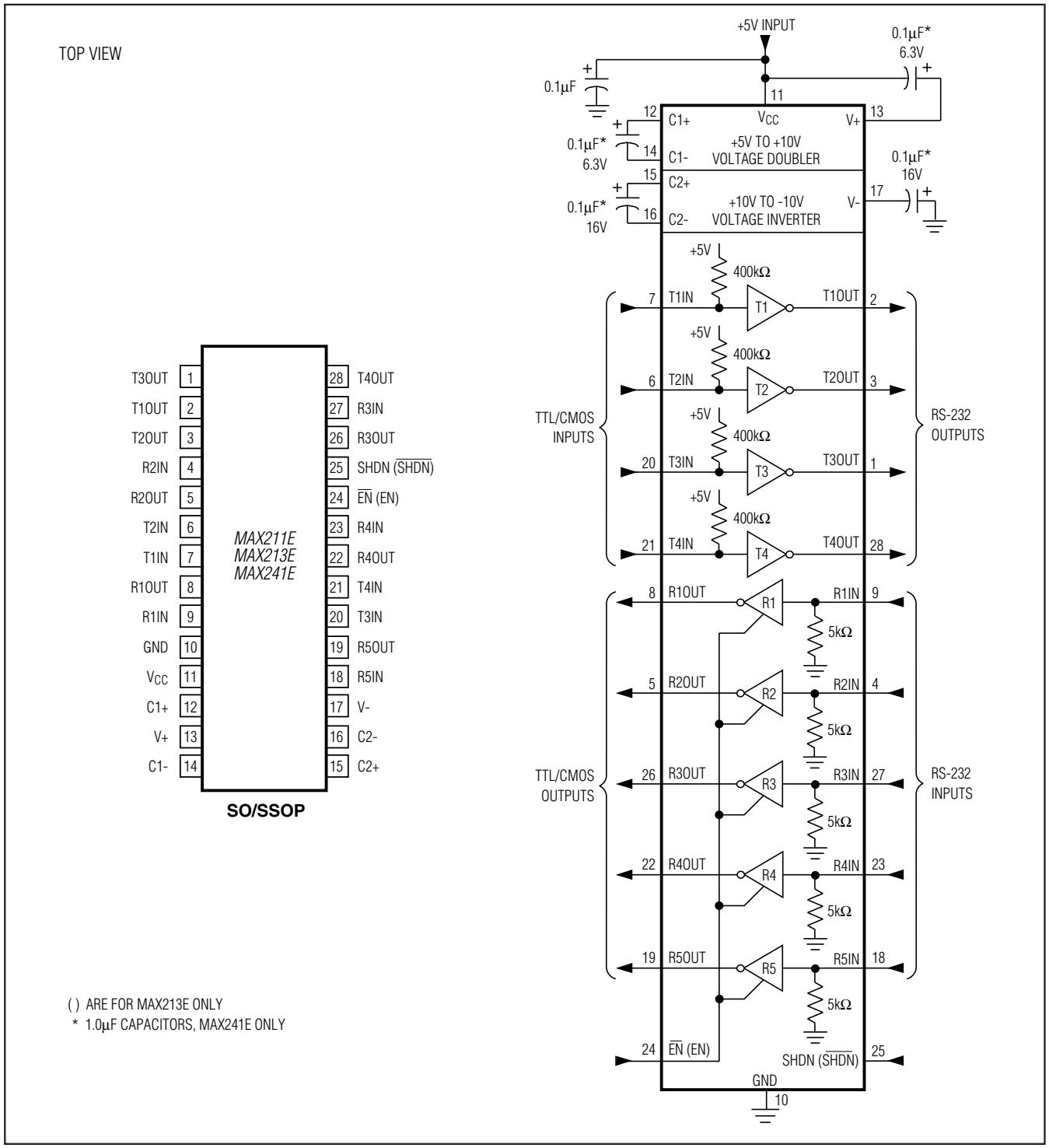

Ordering Information (continued)

PART	TEMP RANGE	PIN-PACKAGE
MAX202ECUE	0°C to +70°C	16 TSSOP
MAX202ECWE	0°C to +70°C	16 Wide SO
MAX202EC/D	0°C to +70°C	Dice*
MAX202EEPE	-40°C to +85°C	16 Plastic DIP
MAX202EESE	-40°C to +85°C	16 Narrow SO
MAX202EEUE	-40°C to +85°C	16 TSSOP
MAX202EEWE	-40°C to +85°C	16 Wide SO
MAX203ECPP	0°C to +70°C	20 Plastic DIP
MAX203ECWP	0°C to +70°C	20 SO
MAX203EEPP	-40°C to +85°C	20 Plastic DIP
MAX203EEWP	-40°C to +85°C	20 SO
MAX205ECPG	0°C to +70°C	24 Wide Plastic DIP
MAX205EEPG	-40°C to +85°C	24 Wide Plastic DIP
MAX206ECNG	0°C to +70°C	24 Narrow Plastic DIP
MAX206ECWG	0°C to +70°C	24 SO
MAX206ECAG	0°C to +70°C	24 SSOP
MAX206EENG	-40°C to +85°C	24 Narrow Plastic DIP
MAX206EEWG	-40°C to +85°C	24 SO
MAX206EEAG	-40°C to +85°C	24 SSOP
MAX207ECNG	0°C to +70°C	24 Narrow Plastic DIP
MAX207ECWG	0°C to +70°C	24 SO
MAX207ECAG	0°C to +70°C	24 SSOP
MAX207EENG	-40°C to +85°C	24 Narrow Plastic DIP
MAX207EEWG	-40°C to +85°C	24 SO
MAX207EEAG	-40°C to +85°C	24 SSOP

PART	TEMP RANGE	PIN-PACKAGE
MAX208ECNG	0°C to +70°C	24 Narrow Plastic DIP
MAX208ECWG	0°C to +70°C	24 SO
MAX208ECAG	0°C to +70°C	24 SSOP
MAX208EENG	-40°C to +85°C	24 Narrow Plastic DIP
MAX208EEWG	-40°C to +85°C	24 SO
MAX208EEAG	-40°C to +85°C	24 SSOP
MAX211ECWI	0°C to +70°C	28 SO
MAX211ECAI	0°C to +70°C	28 SSOP
MAX211EEWI	-40°C to +85°C	28 SO
MAX211EEAI	-40°C to +85°C	28 SSOP
MAX213ECWI	0°C to +70°C	28 SO
MAX213ECAI	0°C to +70°C	28 SSOP
MAX213EEWI	-40°C to +85°C	28 SO
MAX213EEAI	-40°C to +85°C	28 SSOP
MAX232ECPE	0°C to +70°C	16 Plastic DIP
MAX232ECSE	0°C to +70°C	16 Narrow SO
MAX232ECWE	0°C to +70°C	16 Wide SO
MAX232EC/D	0°C to +70°C	Dice*
MAX232EEPE	-40°C to +85°C	16 Plastic DIP
MAX232EESE	-40°C to +85°C	16 Narrow SO
MAX232EEWE	-40°C to +85°C	16 Wide SO
MAX241ECWI	0°C to +70°C	28 SO
MAX241ECAI	0°C to +70°C	28 SSOP
MAX241EEWI	-40°C to +85°C	28 SO
MAX241EEAI	-40°C to +85°C	28 SSOP

**Dice are specified at T_A = +25°C.*

Chip Topographies

MAX202E/MAX232E

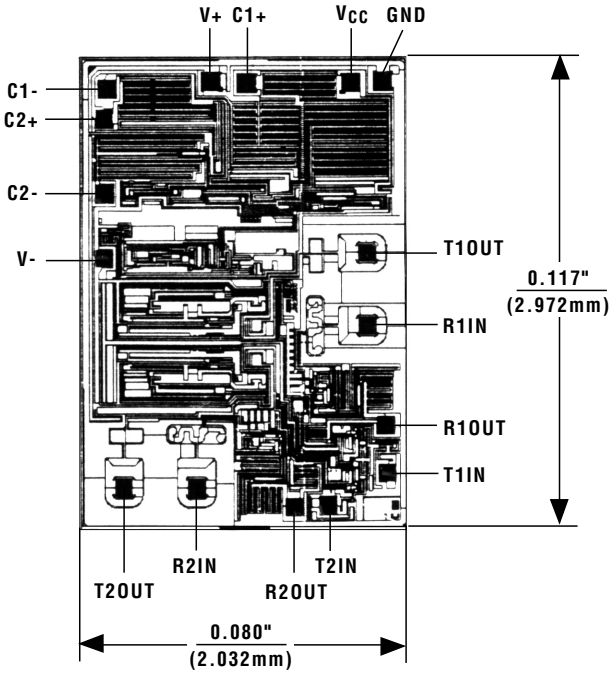

TRANSISTOR COUNT: 123
SUBSTRATE CONNECTED TO GND

MAX211E/MAX213E/MAX241E

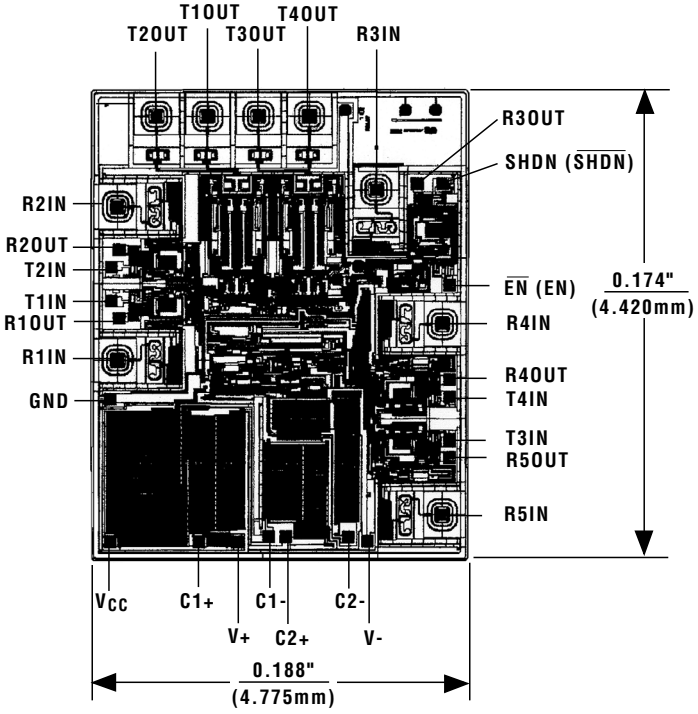

( ) ARE FOR MAX213E ONLY

TRANSISTOR COUNT: 542
SUBSTRATE CONNECTED TO GND

Chip Information

MAX205E/MAX206E/MAX207E/MAX208E

TRANSISTOR COUNT: 328
SUBSTRATE CONNECTED TO GND

Package Information

(The package drawing(s) in this data sheet may not reflect the most current specifications. For the latest package outline information go to **www.maxim-ic.com/packages**.)

PDIPN.EPS

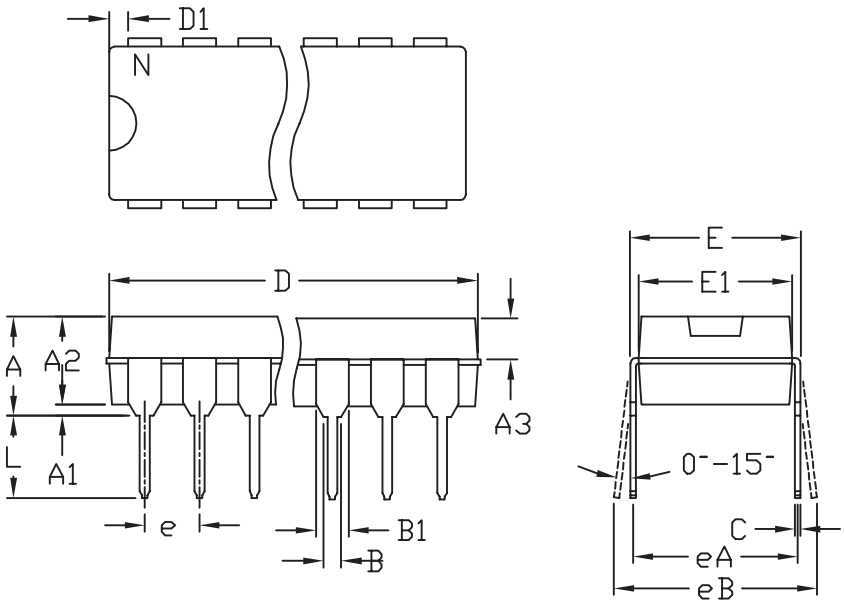

	INCHES		MILLIMETERS	
	MIN	MAX	MIN	MAX
A	---	0.180	---	4.572
A1	0.015	---	0.38	---
A2	0.125	0.175	3.18	4.45
A3	0.055	0.080	1.40	2.03
B	0.015	0.022	0.381	0.56
B1	0.045	0.065	1.14	1.65
C	0.008	0.014	0.2	0.355
D1	0.005	0.080	0.13	2.03
E	0.300	0.325	7.62	8.26
E1	0.240	0.310	6.10	7.87
e	0.100 BSC.		2.54 BSC.	
eA	0.300 BSC.		7.62 BSC.	
eB	0.400 BSC.		10.16 BSC.	
L	0.115	0.150	2.921	3.81

	INCHES		MILLIMETERS			
	MIN	MAX	MIN	MAX	N	MS001
D	0.348	0.390	8.84	9.91	8	AB
D	0.735	0.765	18.67	19.43	14	AC
D	0.745	0.765	18.92	19.43	16	AA
D	0.885	0.915	22.48	23.24	18	AD
D	1.015	1.045	25.78	26.54	20	AE
D	1.14	1.265	28.96	32.13	24	AF
D	1.360	1.380	34.54	35.05	28	*5

NOTES:
1. D&E DO NOT INCLUDE MOLD FLASH
2. MOLD FLASH OR PROTRUSIONS NOT TO EXCEED .15mm (.006")
3. CONTROLLING DIMENSION: MILLIMETER
4. MEETS JEDEC MS001-XX AS SHOWN IN ABOVE TABLE
5. SIMILIAR TO JEDEC MO-058AB
6. N = NUMBER OF PINS

TITLE		DOCUMENT CONTROL NUMBER	REV
PACKAGE FAMILY OUTLINE: PDIP .300"	1/1	21-0043	D

Package Information (continued)

(The package drawing(s) in this data sheet may not reflect the most current specifications. For the latest package outline information go to **www.maxim-ic.com/packages**.)

SSOP.EPS

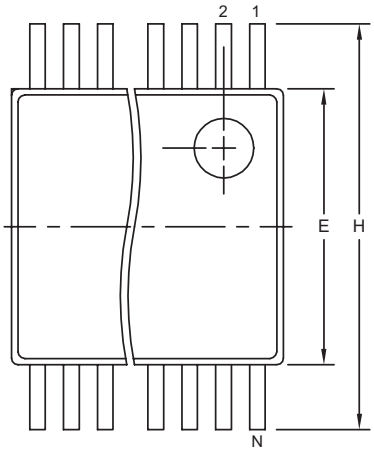

DIM	INCHES MIN	INCHES MAX	MILLIMETERS MIN	MILLIMETERS MAX
A	0.068	0.078	1.73	1.99
A1	0.002	0.008	0.05	0.21
B	0.010	0.015	0.25	0.38
C	0.004	0.008	0.09	0.20
D	SEE VARIATIONS			
E	0.205	0.212	5.20	5.38
e	0.0256 BSC		0.65 BSC	
H	0.301	0.311	7.65	7.90
L	0.025	0.037	0.63	0.95
α	0∞	8∞	0∞	8∞

	INCHES MIN	INCHES MAX	MILLIMETERS MIN	MILLIMETERS MAX	N
D	0.239	0.249	6.07	6.33	14L
D	0.239	0.249	6.07	6.33	16L
D	0.278	0.289	7.07	7.33	20L
D	0.317	0.328	8.07	8.33	24L
D	0.397	0.407	10.07	10.33	28L

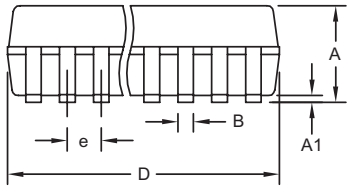

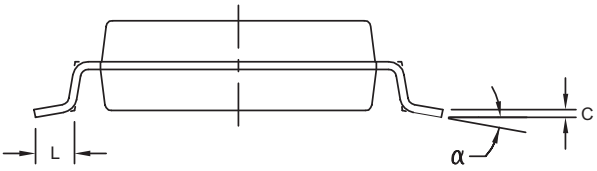

NOTES:
1. D&E DO NOT INCLUDE MOLD FLASH.
2. MOLD FLASH OR PROTRUSIONS NOT TO EXCEED .15 MM (.006").
3. CONTROLLING DIMENSION: MILLIMETERS.
4. MEETS JEDEC MO150.
5. LEADS TO BE COPLANAR WITHIN 0.10 MM.

TITLE: PACKAGE OUTLINE, SSOP, 5.3 MM			
APPROVAL	DOCUMENT CONTROL NO. 21-0056	REV. C	1/1

Package Information (continued)

(The package drawing(s) in this data sheet may not reflect the most current specifications. For the latest package outline information go to **www.maxim-ic.com/packages**.)

SOICW.EPS

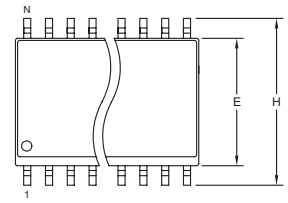

TOP VIEW

DIM	INCHES MIN	INCHES MAX	MILLIMETERS MIN	MILLIMETERS MAX
A	0.093	0.104	2.35	2.65
A1	0.004	0.012	0.10	0.30
B	0.014	0.019	0.35	0.49
C	0.009	0.013	0.23	0.32
e	0.050		1.27	
E	0.291	0.299	7.40	7.60
H	0.394	0.419	10.00	10.65
L	0.016	0.050	0.40	1.27

VARIATIONS:

DIM	INCHES MIN	INCHES MAX	MILLIMETERS MIN	MILLIMETERS MAX	N	MS013
D	0.398	0.413	10.10	10.50	16	AA
D	0.447	0.463	11.35	11.75	18	AB
D	0.496	0.512	12.60	13.00	20	AC
D	0.598	0.614	15.20	15.60	24	AD
D	0.697	0.713	17.70	18.10	28	AE

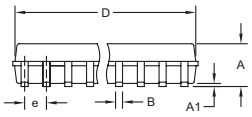

FRONT VIEW

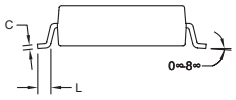

SIDE VIEW

NOTES:
1. D&E DO NOT INCLUDE MOLD FLASH.
2. MOLD FLASH OR PROTRUSIONS NOT TO EXCEED 0.15mm (.006").
3. LEADS TO BE COPLANAR WITHIN 0.10mm (.004").
4. CONTROLLING DIMENSION: MILLIMETERS.
5. MEETS JEDEC MS013.
6. N = NUMBER OF PINS.

TITLE: PACKAGE OUTLINE, .300" SOIC

APPROVAL | DOCUMENT CONTROL NO. 21-0042 | REV. B | 1/1

TSSOP4.40mm.EPS

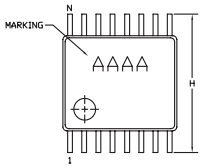

TOP VIEW

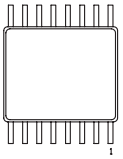

BOTTOM VIEW

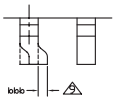

BENT LEAD DETAIL

SYMBOL	COMMON DIMENSIONS MILLIMETERS MIN.	MILLIMETERS MAX.	INCHES MIN.	INCHES MAX.
A	——	1.10		.043
A_1	0.05	0.15	.002	.006
A_2	0.85	0.95	.033	.037
b	0.19	0.30	.007	.012
b_1	0.19	0.25	.007	.010
c	0.09	0.20	.004	.008
c_1	0.09	0.14	.004	.006
D	SEE VARIATIONS		SEE VARIATIONS	
E	4.30	4.50	.169	.177
e	0.65 BSC		.026 BSC	
H	6.25	6.55	.246	.258
L	0.50	0.70	.020	.028
N	SEE VARIATIONS		SEE VARIATIONS	
α	0°	8°	0°	8°
aaa	0.10 MAX			

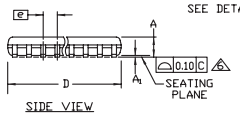

SIDE VIEW

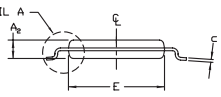

END VIEW

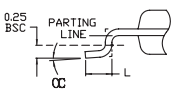

DETAIL A

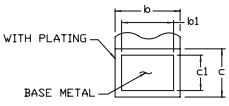

LEAD TIP DETAIL

JEDEC MO-153	N		PKG. CODES	VARIATIONS MILLIMETERS MIN.	VARIATIONS MILLIMETERS MAX.	VARIATIONS INCHES MIN.	VARIATIONS INCHES MAX.
AB-1	14	D	U14-1; U14-2	4.90	5.10	.193	.201
AB	16	D	U16-1; U16-2	4.90	5.10	.193	.201
AC	20	D	U20-2; U20M-2 U20-3	6.40	6.60	.252	.260
AD	24	D	U24-1	7.70	7.90	.303	.311
AE	28	D	U28-1; U28-2; U28-3	9.60	9.80	.378	.386

NOTES
1. DIMENSIONS D AND E DO NOT INCLUDE FLASH
2. MOLD FLASH OR PROTRUSIONS NOT TO EXCEED 0.15mm PER SIDE
3. CONTROLLING DIMENSION: MILLIMETER
4. MEETS JEDEC OUTLINE MO-153. SEE JEDEC VARIATIONS TABLE
5. "N" REFERS TO NUMBER OF LEADS
6. LEAD COPLANARITY 0.10 MM MAX.
7. NUMBER OF LEADS SHOWN ARE FOR REFERENCE ONLY
8. MARKING IS FOR PACKAGE ORIENTATION REFERENCE ONLY
9. BENT LEAD 0.10 MM MAX.
10. ALL DIMENSIONS APPLY TO BOTH LEADED (–) AND PBFREE (+) PKG. CODES.

–DRAWING NOT TO SCALE–

TITLE: PACKAGE OUTLINE, TSSOP 4.40mm BODY

APPROVAL | DOCUMENT CONTROL NO. 21-0066 | REV. J | 1/1

Maxim cannot assume responsibility for use of any circuitry other than circuitry entirely embodied in a Maxim product. No circuit patent licenses are implied. Maxim reserves the right to change the circuitry and specifications without notice at any time. The parametric values (min and max limits) shown in the Electrical Characteristics table are guaranteed. Other parametric values quoted in this data sheet are provided for guidance.

Maxim Integrated 160 Rio Robles, San Jose, CA 95134 USA 1-408-601-1000

© 2005 Maxim Integrated

The Maxim logo and Maxim Integrated are trademarks of Maxim Integrated Products, Inc.

OCEAN CHIPS
Океан Электроники
Поставка электронных компонентов

Компания «Океан Электроники» предлагает заключение долгосрочных отношений при поставках импортных электронных компонентов на взаимовыгодных условиях!

Наши преимущества:

- Поставка оригинальных импортных электронных компонентов напрямую с производств Америки, Европы и Азии, а так же с крупнейших складов мира;
- Широкая линейка поставок активных и пассивных импортных электронных компонентов (более 30 млн. наименований);
- Поставка сложных, дефицитных, либо снятых с производства позиций;
- Оперативные сроки поставки под заказ (от 5 рабочих дней);
- Экспресс доставка в любую точку России;
- Помощь Конструкторского Отдела и консультации квалифицированных инженеров;
- Техническая поддержка проекта, помощь в подборе аналогов, поставка прототипов;
- Поставка электронных компонентов под контролем ВП;
- Система менеджмента качества сертифицирована по Международному стандарту ISO 9001;
- При необходимости вся продукция военного и аэрокосмического назначения проходит испытания и сертификацию в лаборатории (по согласованию с заказчиком);
- Поставка специализированных компонентов военного и аэрокосмического уровня качества (Xilinx, Altera, Analog Devices, Intersil, Interpoint, Microsemi, Actel, Aeroflex, Peregrine, VPT, Syfer, Eurofarad, Texas Instruments, MS Kennedy, Miteq, Cobham, E2V, MA-COM, Hittite, Mini-Circuits, General Dynamics и др.);

Компания «Океан Электроники» является официальным дистрибьютором и эксклюзивным представителем в России одного из крупнейших производителей разъемов военного и аэрокосмического назначения **«JONHON»**, а так же официальным дистрибьютором и эксклюзивным представителем в России производителя высокотехнологичных и надежных решений для передачи СВЧ сигналов **«FORSTAR»**.

AVIC JONHON

«JONHON» (основан в 1970 г.)

Разъемы специального, военного и аэрокосмического назначения:

(Применяются в военной, авиационной, аэрокосмической, морской, железнодорожной, горно- и нефтедобывающей отраслях промышленности)

«FORSTAR» (основан в 1998 г.)

ВЧ соединители, коаксиальные кабели, кабельные сборки и микроволновые компоненты:

(Применяются в телекоммуникациях гражданского и специального назначения, в средствах связи, РЛС, а так же военной, авиационной и аэрокосмической отраслях промышленности).

FORSTAR®

Телефон: 8 (812) 309-75-97 (многоканальный)
Факс: 8 (812) 320-03-32
Электронная почта: ocean@oceanchips.ru
Web: http://oceanchips.ru/
Адрес: 198099, г. Санкт-Петербург, ул. Калинина, д. 2, корп. 4, лит. А