74HC138-Q100; 74HCT138-Q100

3-to-8 line decoder/demultiplexer; inverting

Rev. 1 — 16 July 2012 Product data sheet

1. General description

The 74HC138-Q100; 74HCT138-Q100 is a high-speed Si-gate CMOS device and is pin compatible with Low-power Schottky TTL (LSTTL).

The 74HC138-Q100; 74HCT138-Q100 decoder accepts three binary weighted address inputs (A0, A1 and A3) and when enabled, provides 8 mutually exclusive active LOW outputs ($\overline{Y0}$ to $\overline{Y7}$).

The 74HC138-Q100; 74HCT138-Q100 features three enable inputs: two active LOW ($\overline{E1}$ and $\overline{E2}$) and one active HIGH (E3). Every output will be HIGH unless $\overline{E1}$ and $\overline{E2}$ are LOW and E3 is HIGH.

This multiple enable function allows easy parallel expansion of the 74HC138-Q100; 74HCT138-Q100 to a 1-of-32 (5 lines to 32 lines) decoder with just four 74HC138-Q100; 74HCT138-Q100 ICs and one inverter.

The 74HC138-Q100; 74HCT138-Q100 can be used as an eight output demultiplexer by using one of the active LOW enable inputs as the data input and the remaining enable inputs as strobes. Not used enable inputs must be permanently tied to their appropriate active HIGH- or LOW-state.

This product has been qualified to the Automotive Electronics Council (AEC) standard Q100 (Grade 1) and is suitable for use in automotive applications.

2. Features and benefits

- Automotive product qualification in accordance with AEC-Q100 (Grade 1)
  - Specified from –40 °C to +85 °C and from –40 °C to +125 °C
- Demultiplexing capability
- Multiple input enable for easy expansion
- Complies with JEDEC standard no. 7A
- Ideal for memory chip select decoding
- Active LOW mutually exclusive outputs
- ESD protection:
  - MIL-STD-883, method 3015 exceeds 2000 V
  - HBM JESD22-A114F exceeds 2000 V
  - MM JESD22-A115-A exceeds 200 V (C = 200 pF, R = 0 Ω)
- Multiple package options

3. Ordering information

Table 1. Ordering information

Type number	Package			
	Temperature range	Name	Description	Version
74HC138D-Q100	–40 °C to +125 °C	SO16	plastic small outline package; 16 leads; body width 3.9 mm	SOT109-1
74 HCT138D-Q100				
74HC138PW-Q100	–40 °C to +125 °C	TSSOP16	plastic thin shrink small outline package; 16 leads; body width 4.4 mm	SOT403-1
74HCT138PW-Q100				
74HC138BQ-Q100	–40 °C to +125 °C	DHVQFN16	plastic dual in-line compatible thermal enhanced very thin quad flat package; no leads; 16 terminals; body 2.5 × 3.5 × 0.85 mm	SOT763-1
74HCT138BQ-Q100				

4. Functional diagram

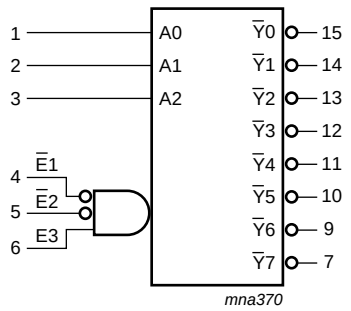

Fig 1. Logic symbol

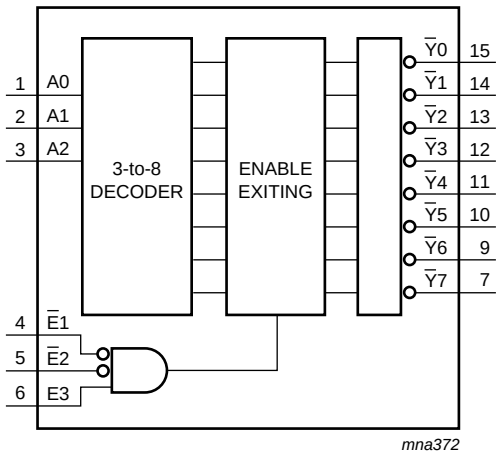

Fig 2. Functional diagram

All information provided in this document is subject to legal disclaimers.

© NXP B.V. 2012. All rights reserved.

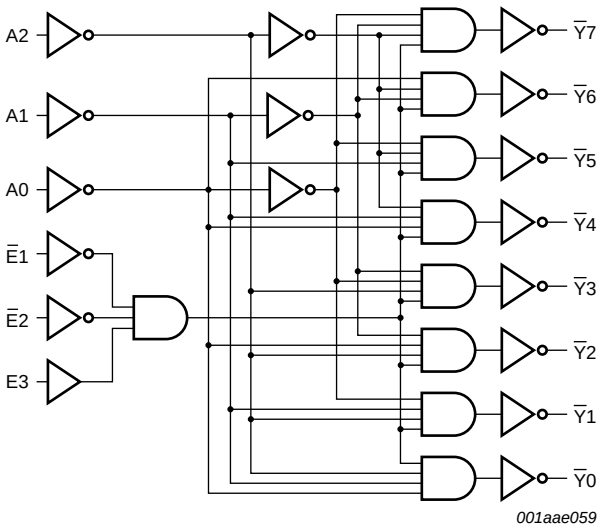

Fig 3. Logic diagram

5. Pinning information

5.1 Pinning

74HC138/Q100
74HCT138/Q100

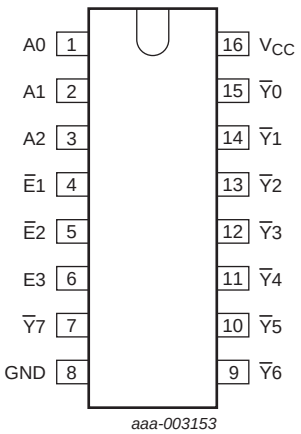

Fig 4. Pin configuration SO16 and TSSOP16

74HC138/Q100
74HCT138/Q100

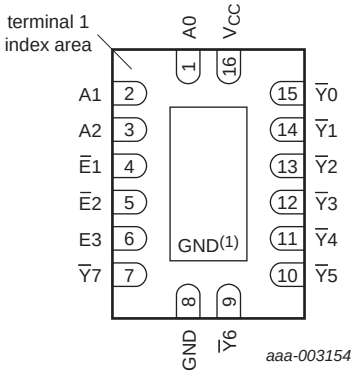

Transparent top view

(1) The die substrate is attached to this pad using conductive die attach material. It cannot be used as supply pin or input.

Fig 5. Pin configuration DHVQFN16

All information provided in this document is subject to legal disclaimers.

© NXP B.V. 2012. All rights reserved.

5.2 Pin description

Table 2. Pin description

Symbol	Pin	Description
A0, A1, A2	1, 2, 3	address input A0, A1, A2
$\overline{E}1$, $\overline{E}2$	4, 5	enable input $\overline{E}1$, $\overline{E}2$ (active LOW)
E3	6	enable input E3 (active HIGH)
$\overline{Y}0$, $\overline{Y}1$, $\overline{Y}2$, $\overline{Y}3$, $\overline{Y}4$, $\overline{Y}5$, $\overline{Y}6$, $\overline{Y}7$	15, 14, 13, 12, 11, 10, 9, 7	output $\overline{Y}0$, $\overline{Y}1$, $\overline{Y}2$, $\overline{Y}3$, $\overline{Y}4$, $\overline{Y}5$, $\overline{Y}6$, $\overline{Y}7$ (active LOW)
GND	8	ground (0 V)
V_{CC}	16	positive supply voltage

6. Functional description

Table 3. Function table[1]

Control			Input			Output							
$\overline{E}1$	$\overline{E}2$	E3	A2	A1	A0	$\overline{Y}7$	$\overline{Y}6$	$\overline{Y}5$	$\overline{Y}4$	$\overline{Y}3$	$\overline{Y}2$	$\overline{Y}1$	$\overline{Y}0$
H	X	X	X	X	X	H	H	H	H	H	H	H	H
X	H	X											
X	X	L											
L	L	H	L	L	L	H	H	H	H	H	H	H	L
			L	L	H	H	H	H	H	H	H	L	H
			L	H	L	H	H	H	H	H	L	H	H
			L	H	H	H	H	H	H	L	H	H	H
			H	L	L	H	H	H	L	H	H	H	H
			H	L	H	H	H	L	H	H	H	H	H
			H	H	L	H	L	H	H	H	H	H	H
			H	H	H	L	H	H	H	H	H	H	H

[1] H = HIGH voltage level;
L = LOW voltage level;
X = don't care.

All information provided in this document is subject to legal disclaimers.

© NXP B.V. 2012. All rights reserved.

7. Limiting values

Table 4. Limiting values

In accordance with the Absolute Maximum Rating System (IEC 60134). Voltages are referenced to GND (ground = 0 V).

Symbol	Parameter	Conditions		Min	Max	Unit
V_{CC}	supply voltage			–0.5	+7	V
I_{IK}	input clamping current	$V_I < -0.5$ V or $V_I > V_{CC} + 0.5$ V		-	±20	mA
I_{OK}	output clamping current	$V_O < -0.5$ V or $V_O > V_{CC} + 0.5$ V		-	±20	mA
I_O	output current	$V_O = -0.5$ V to ($V_{CC} + 0.5$ V)		-	±25	mA
I_{CC}	supply current			-	50	mA
I_{GND}	ground current			-	–50	mA
T_{stg}	storage temperature			–65	+150	°C
P_{tot}	total power dissipation		[1]	-	500	mW

[1] For SO16 package: P_{tot} derates linearly with 8 mW/K above 70 °C.
For TSSOP16 package: P_{tot} derates linearly with 5.5 mW/K above 60 °C.
For DHVQFN16 package: P_{tot} derates linearly with 4.5 mW/K above 60 °C.

8. Recommended operating conditions

Table 5. Recommended operating conditions

Voltages are referenced to GND (ground = 0 V)

Symbol	Parameter	Conditions	74HC138-Q100			74HCT138-Q100			Unit
			Min	Typ	Max	Min	Typ	Max	
V_{CC}	supply voltage		2.0	5.0	6.0	4.5	5.0	5.5	V
V_I	input voltage		0	-	V_{CC}	0	-	V_{CC}	V
V_O	output voltage		0	-	V_{CC}	0	-	V_{CC}	V
T_{amb}	ambient temperature		–40	+25	+125	–40	+25	+125	°C
$\Delta t/\Delta V$	input transition rise and fall rate	$V_{CC} = 2.0$ V	-	-	625	-	-	-	ns/V
		$V_{CC} = 4.5$ V	-	1.67	139	-	1.67	139	ns/V
		$V_{CC} = 6.0$ V	-	-	83	-	-	-	ns/V

All information provided in this document is subject to legal disclaimers.

© NXP B.V. 2012. All rights reserved.

9. Static characteristics

Table 6. Static characteristics

At recommended operating conditions; voltages are referenced to GND (ground = 0 V).

Symbol	Parameter	Conditions	T_{amb} = 25 °C			T_{amb} = –40 °C to +85 °C		T_{amb} = –40 °C to +125 °C		Unit
			Min	Typ	Max	Min	Max	Min	Max	
74HC138-Q100										
V_{IH}	HIGH-level input voltage	V_{CC} = 2.0 V	1.5	1.2	-	1.5	-	1.5	-	V
		V_{CC} = 4.5 V	3.15	2.4	-	3.15	-	3.15	-	V
		V_{CC} = 6.0 V	4.2	3.2	-	4.2	-	4.2	-	V
V_{IL}	LOW-level input voltage	V_{CC} = 2.0 V	-	0.8	0.5	-	0.5	-	0.5	V
		V_{CC} = 4.5 V	-	2.1	1.35	-	1.35	-	1.35	V
		V_{CC} = 6.0 V	-	2.8	1.8	-	1.8	-	1.8	V
V_{OH}	HIGH-level output voltage	$V_I = V_{IH}$ or V_{IL}								
		I_O = –20 μA; V_{CC} = 2.0 V	1.9	2.0	-	1.9	-	1.9	-	V
		I_O = –20 μA; V_{CC} = 4.5 V	4.4	4.5	-	4.4	-	4.4	-	V
		I_O = –20 μA; V_{CC} = 6.0 V	5.9	6.0	-	5.9	-	5.9	-	V
		I_O = –4.0 mA; V_{CC} = 4.5 V	3.98	4.32	-	3.84	-	3.7	-	V
		I_O = –5.2 mA; V_{CC} = 6.0 V	5.48	5.81	-	5.34	-	5.2	-	V
V_{OL}	LOW-level output voltage	$V_I = V_{IH}$ or V_{IL}								
		I_O = 20 μA; V_{CC} = 2.0 V	-	0	0.1	-	0.1	-	0.1	V
		I_O = 20 μA; V_{CC} = 4.5 V	-	0	0.1	-	0.1	-	0.1	V
		I_O = 20 μA; V_{CC} = 6.0 V	-	0	0.1	-	0.1	-	0.1	V
		I_O = 4.0 mA; V_{CC} = 4.5 V	-	0.15	0.26	-	0.33	-	0.4	V
		I_O = 5.2 mA; V_{CC} = 6.0 V	-	0.16	0.26	-	0.33	-	0.4	V
I_I	input leakage current	$V_I = V_{CC}$ or GND; V_{CC} = 6.0 V	-	-	±0.1	-	±1.0	-	±1.0	μA
I_{OZ}	OFF-state output current	per input pin; $V_I = V_{IH}$ or V_{IL}; $V_O = V_{CC}$ or GND; other inputs at V_{CC} or GND; V_{CC} = 6.0 V; I_O = 0 A		-	-	±0.5	-	±5.0	-	±10
I_{CC}	supply current	$V_I = V_{CC}$ or GND; I_O = 0 A; V_{CC} = 6.0 V	-	-	8.0	-	80	-	160	μA
C_I	input capacitance		-	3.5	-					pF
74HCT138-Q100										
V_{IH}	HIGH-level input voltage	V_{CC} = 4.5 V to 5.5 V	2.0	1.6	-	2.0	-	2.0	-	V
V_{IL}	LOW-level input voltage	V_{CC} = 4.5 V to 5.5 V	-	1.2	0.8	-	0.8	-	0.8	V
V_{OH}	HIGH-level output voltage	$V_I = V_{IH}$ or V_{IL}; V_{CC} = 4.5 V								
		I_O = –20 μA	4.4	4.5	-	4.4	-	4.4	-	V
		I_O = –4 mA	3.98	4.32	-	3.84	-	3.7	-	V

All information provided in this document is subject to legal disclaimers.

© NXP B.V. 2012. All rights reserved.

Table 6. Static characteristics *...continued*

At recommended operating conditions; voltages are referenced to GND (ground = 0 V).

Symbol	Parameter	Conditions	T_{amb} = 25 °C			T_{amb} = –40 °C to +85 °C		T_{amb} = –40 °C to +125 °C		Unit
			Min	Typ	Max	Min	Max	Min	Max	
V_{OL}	LOW-level output voltage	$V_I = V_{IH}$ or V_{IL}; V_{CC} = 4.5 V								
		I_O = 20 μA	-	0	0.1	-	0.1	-	0.1	V
		I_O = 4.0 mA	-	0.15	0.26	-	0.33	-	0.4	V
I_I	input leakage current	$V_I = V_{CC}$ or GND; V_{CC} = 5.5 V	-	-	±0.1	-	±1.0	-	±1.0	μA
I_{OZ}	OFF-state output current	per input pin; $V_I = V_{IH}$ or V_{IL}; $V_O = V_{CC}$ or GND; other inputs at V_{CC} or GND; V_{CC} = 5.5 V; I_O = 0 A	-	-	±0.5	-	±5.0	-	±10	μA
I_{CC}	supply current	$V_I = V_{CC}$ or GND; I_O = 0 A; V_{CC} = 5.5 V	-	-	8.0	-	80	-	160	μA
ΔI_{CC}	additional supply current	$V_I = V_{CC}$ – 2.1 V; other inputs at V_{CC} or GND; V_{CC} = 4.5 V to 5.5 V; I_O = 0 A								
		per input pin; An inputs	-	150	540	-	675	-	735	μA
		per input pin; $\overline{En}$ inputs	-	125	450	-	562.5	-	612.5	μA
		per input pin; E3 input	-	100	360	-	450	-	490	μA
C_I	input capacitance		-	3.5	-					pF

All information provided in this document is subject to legal disclaimers.

© NXP B.V. 2012. All rights reserved.

10. Dynamic characteristics

Table 7. Dynamic characteristics

Voltages are referenced to GND (ground = 0 V); C_L = 50 pF unless otherwise specified; for test circuit see Figure 8.

Symbol	Parameter	Conditions		T_{amb} = 25 °C			T_{amb} = –40 °C to +85 °C		T_{amb} = –40 °C to +125 °C		Unit
				Min	Typ	Max	Min	Max	Min	Max	
For type 74HC138-Q100											
t_{pd}	propagation delay	An to $\overline{Y}$n; see Figure 6	[1]								
		V_{CC} = 2.0 V		-	41	150	-	190	-	225	ns
		V_{CC} = 4.5 V		-	15	30	-	38	-	45	ns
		V_{CC} = 5 V; C_L = 15 pF		-	12	-	-	-	-	-	ns
		V_{CC} = 6.0 V		-	12	26	-	33	-	38	ns
		E3 to $\overline{Y}$n; see Figure 6	[1]								
		V_{CC} = 2.0 V		-	47	150	-	190	-	225	ns
		V_{CC} = 4.5 V		-	17	20	-	38	-	45	ns
		V_{CC} = 5 V; C_L = 15 pF		-	14	-	-	-	-	-	ns
		V_{CC} = 6.0 V		-	14	26	-	33	-	38	ns
		$\overline{E}$n to $\overline{Y}$n; see Figure 7	[1]								
		V_{CC} = 2.0 V		-	47	150	-	190	-	225	ns
		V_{CC} = 4.5 V		-	17	20	-	38	-	45	ns
		V_{CC} = 5 V; C_L = 15 pF		-	14	-	-	-	-	-	ns
		V_{CC} = 6.0 V		-	14	26	-	33	-	38	ns
t_t	transition time	$\overline{Y}$n; see Figure 6 and Figure 7	[2]								
		V_{CC} = 2.0 V		-	19	75	-	95	-	110	ns
		V_{CC} = 4.5 V		-	7	15	-	19	-	22	ns
		V_{CC} = 6.0 V		-	6	13	-	16	-	19	ns
C_{PD}	power dissipation capacitance	C_L = 50 pF; f = 1 MHz; V_I = GND to V_{CC}	[3]	-	67	-	-	-	-	-	pF

All information provided in this document is subject to legal disclaimers.

© NXP B.V. 2012. All rights reserved.

Table 7. Dynamic characteristics *...continued*

Voltages are referenced to GND (ground = 0 V); C_L = 50 pF unless otherwise specified; for test circuit see Figure 8.

Symbol	Parameter	Conditions		T_{amb} = 25 °C			T_{amb} = –40 °C to +85 °C		T_{amb} = –40 °C to +125 °C		Unit
				Min	Typ	Max	Min	Max	Min	Max	
For type 74HCT138-Q100											
t_{pd}	propagation delay	An to $\overline{Y}$n; see Figure 6	[1]								
		V_{CC} = 4.5 V		-	20	35	-	44	-	53	ns
		V_{CC} = 5 V; C_L = 15 pF		-	17	-	-	-	-	-	ns
		E3 to $\overline{Y}$n; see Figure 6	[1]								
		V_{CC} = 4.5 V		-	18	40	-	50	-	60	ns
		V_{CC} = 5 V; C_L = 15 pF		-	19	-	-	-	-	-	ns
		$\overline{E}$n to $\overline{Y}$n; see Figure 7	[1]								
		V_{CC} = 4.5 V		-	19	40	-	50	-	60	ns
		V_{CC} = 5 V; C_L = 15 pF		-	19	-	-	-	-	-	ns
t_t	transition time	$\overline{Y}$n; see Figure 6 and Figure 7	[2]								
		V_{CC} = 4.5 V		-	7	15	-	19	-	22	ns
C_{PD}	power dissipation capacitance	C_L = 50 pF; f = 1 MHz; V_I = GND to V_{CC}	[3]	-	67	-	-	-	-	-	pF

[1] t_{pd} is the same as t_{PLH} and t_{PHL}.

[2] t_t is the same as t_{THL} and t_{TLH}.

[3] C_{PD} is used to determine the dynamic power dissipation (P_D in μW).
$P_D = C_{PD} \times V_{CC}^2 \times f_i \times N + \Sigma(C_L \times V_{CC}^2 \times f_o)$ where:
f_i = input frequency in MHz;
f_o = output frequency in MHz;
C_L = output load capacitance in pF;
V_{CC} = supply voltage in V;
N = number of inputs switching;
$\Sigma(C_L \times V_{CC}^2 \times f_o)$ = sum of outputs.

All information provided in this document is subject to legal disclaimers.

© NXP B.V. 2012. All rights reserved.

11. Waveforms

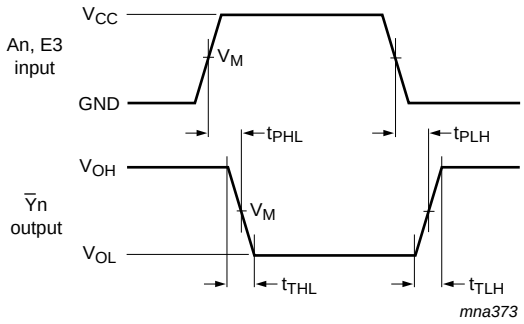

Measurement points are given in Table 8.

V_{OL} and V_{OH} are typical voltage output levels that occur with the output load.

Fig 6. Propagation delay input (An) and enable input (E3) to output ($\overline{Y}$n) and transition time output ($\overline{Y}$n)

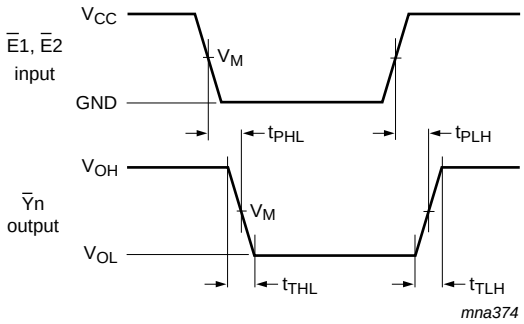

Measurement points are given in Table 8.

V_{OL} and V_{OH} are typical voltage output levels that occur with the output load.

Fig 7. Propagation delay enable input ($\overline{E}$n) to output ($\overline{Y}$n) and transition time output ($\overline{Y}$n)

Table 8. Measurement points

Type	Input	Output
	V_M	V_M
74HC138-Q100	$0.5V_{CC}$	$0.5V_{CC}$
74HCT138-Q100	1.3 V	1.3 V

All information provided in this document is subject to legal disclaimers.

© NXP B.V. 2012. All rights reserved.

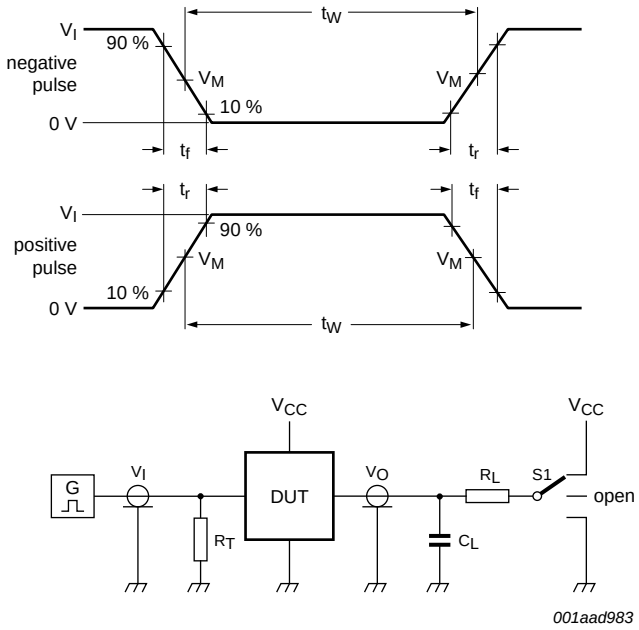

Test data is given in Table 9.

Definitions test circuit:

R_T = Termination resistance should be equal to output impedance Z_o of the pulse generator.

C_L = Load capacitance including jig and probe capacitance.

R_L = Load resistance.

S1 = Test selection switch.

Fig 8. Load circuitry for measuring switching times

Table 9. Test data

Type	Input		Load		S1 position		
	V_I	t_r, t_f	C_L	R_L	t_{PHL}, t_{PLH}	t_{PZH}, t_{PHZ}	t_{PZL}, t_{PLZ}
74HC138-Q100	V_{CC}	6 ns	15 pF, 50 pF	1 kΩ	open	GND	V_{CC}
74HCT138-Q100	3 V	6 ns	15 pF, 50 pF	1 kΩ	open	GND	V_{CC}

All information provided in this document is subject to legal disclaimers.

© NXP B.V. 2012. All rights reserved.

12. Package outline

SO16: plastic small outline package; 16 leads; body width 3.9 mm **SOT109-1**

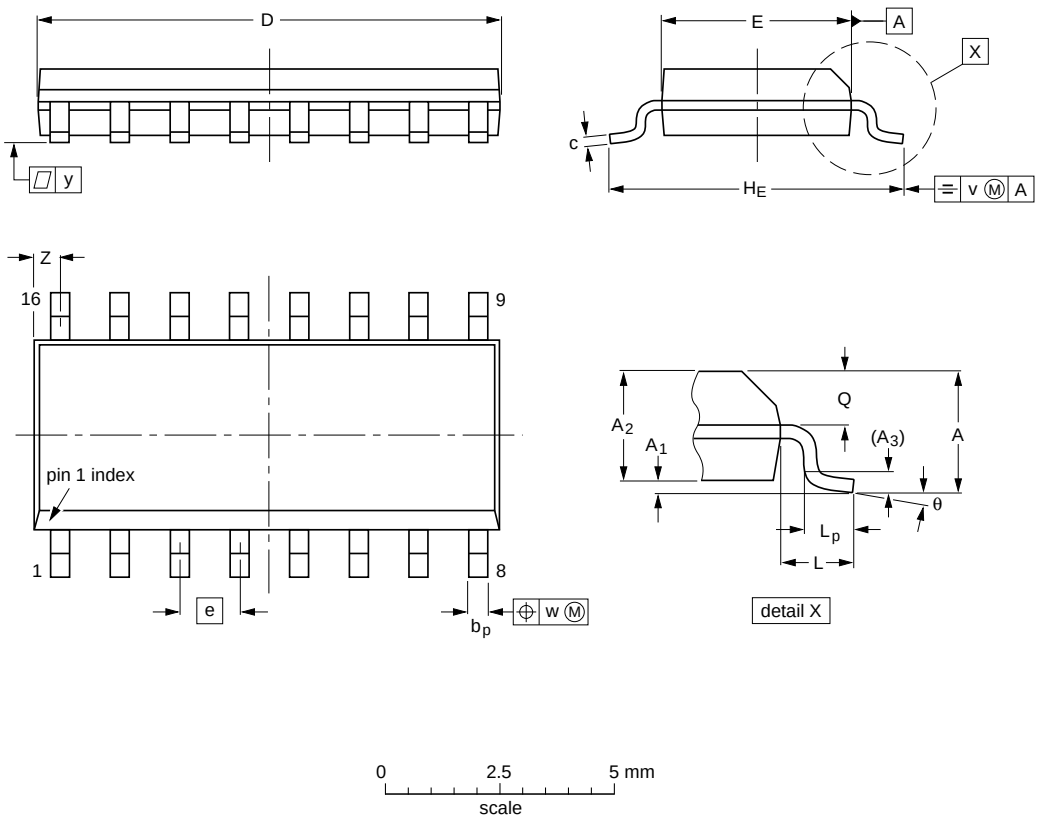

DIMENSIONS (inch dimensions are derived from the original mm dimensions)

UNIT	A max.	A_1	A_2	A_3	b_p	c	D(1)	E(1)	e	H_E	L	L_p	Q	v	w	y	Z(1)	θ
mm	1.75	0.25 0.10	1.45 1.25	0.25	0.49 0.36	0.25 0.19	10.0 9.8	4.0 3.8	1.27	6.2 5.8	1.05	1.0 0.4	0.7 0.6	0.25	0.25	0.1	0.7 0.3	8° 0°
inches	0.069	0.010 0.004	0.057 0.049	0.01	0.019 0.014	0.0100 0.0075	0.39 0.38	0.16 0.15	0.05	0.244 0.228	0.041	0.039 0.016	0.028 0.020	0.01	0.01	0.004	0.028 0.012	

Note

1. Plastic or metal protrusions of 0.15 mm (0.006 inch) maximum per side are not included.

OUTLINE VERSION	REFERENCES				EUROPEAN PROJECTION	ISSUE DATE
	IEC	JEDEC	JEITA			
SOT109-1	076E07	MS-012				~~99-12-27~~ 03-02-19

Fig 9. Package outline SOT109-1 (SO16)

All information provided in this document is subject to legal disclaimers.

© NXP B.V. 2012. All rights reserved.

TSSOP16: plastic thin shrink small outline package; 16 leads; body width 4.4 mm **SOT403-1**

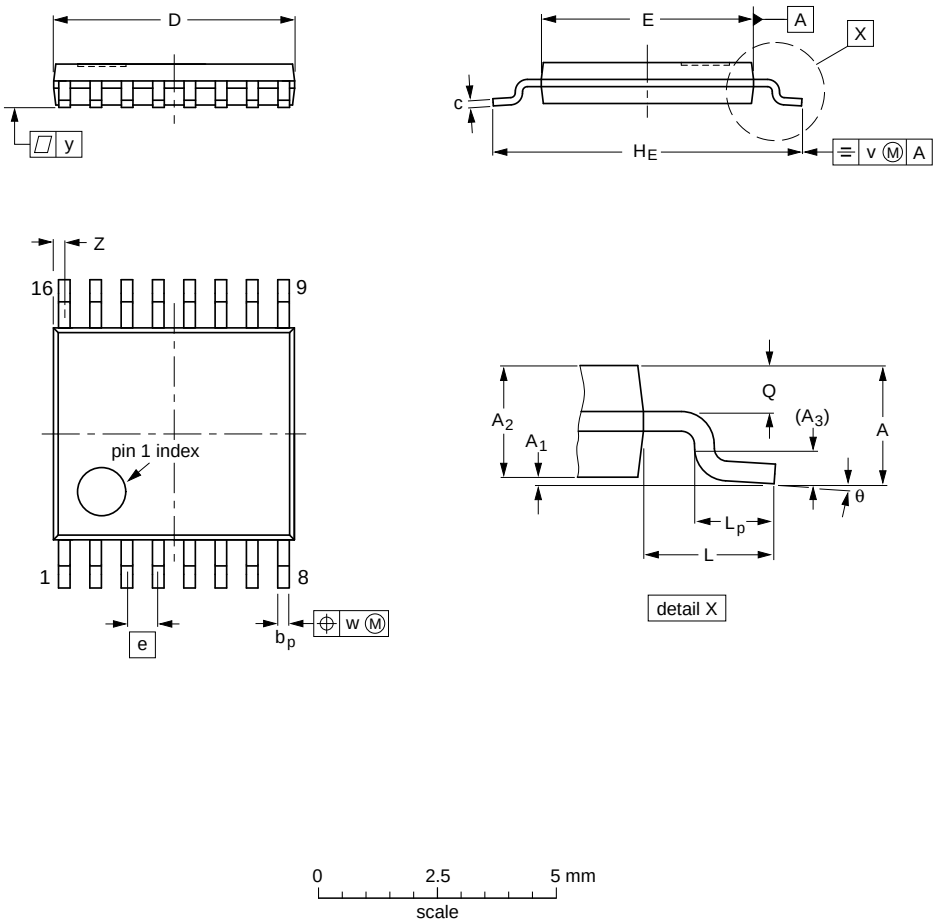

DIMENSIONS (mm are the original dimensions)

UNIT	A max.	A_1	A_2	A_3	b_p	c	D (1)	E (2)	e	H_E	L	L_p	Q	v	w	y	Z (1)	θ
mm	1.1	0.15 0.05	0.95 0.80	0.25	0.30 0.19	0.2 0.1	5.1 4.9	4.5 4.3	0.65	6.6 6.2	1	0.75 0.50	0.4 0.3	0.2	0.13	0.1	0.40 0.06	8° 0°

Notes

1. Plastic or metal protrusions of 0.15 mm maximum per side are not included.
2. Plastic interlead protrusions of 0.25 mm maximum per side are not included.

OUTLINE VERSION	REFERENCES				EUROPEAN PROJECTION	ISSUE DATE
	IEC	JEDEC	JEITA			
SOT403-1		MO-153				~~99-12-27~~ 03-02-18

Fig 10. Package outline SOT403-1 (TSSOP16)

All information provided in this document is subject to legal disclaimers.

© NXP B.V. 2012. All rights reserved.

DHVQFN16: plastic dual in-line compatible thermal enhanced very thin quad flat package; no leads; 16 terminals; body 2.5 x 3.5 x 0.85 mm **SOT763-1**

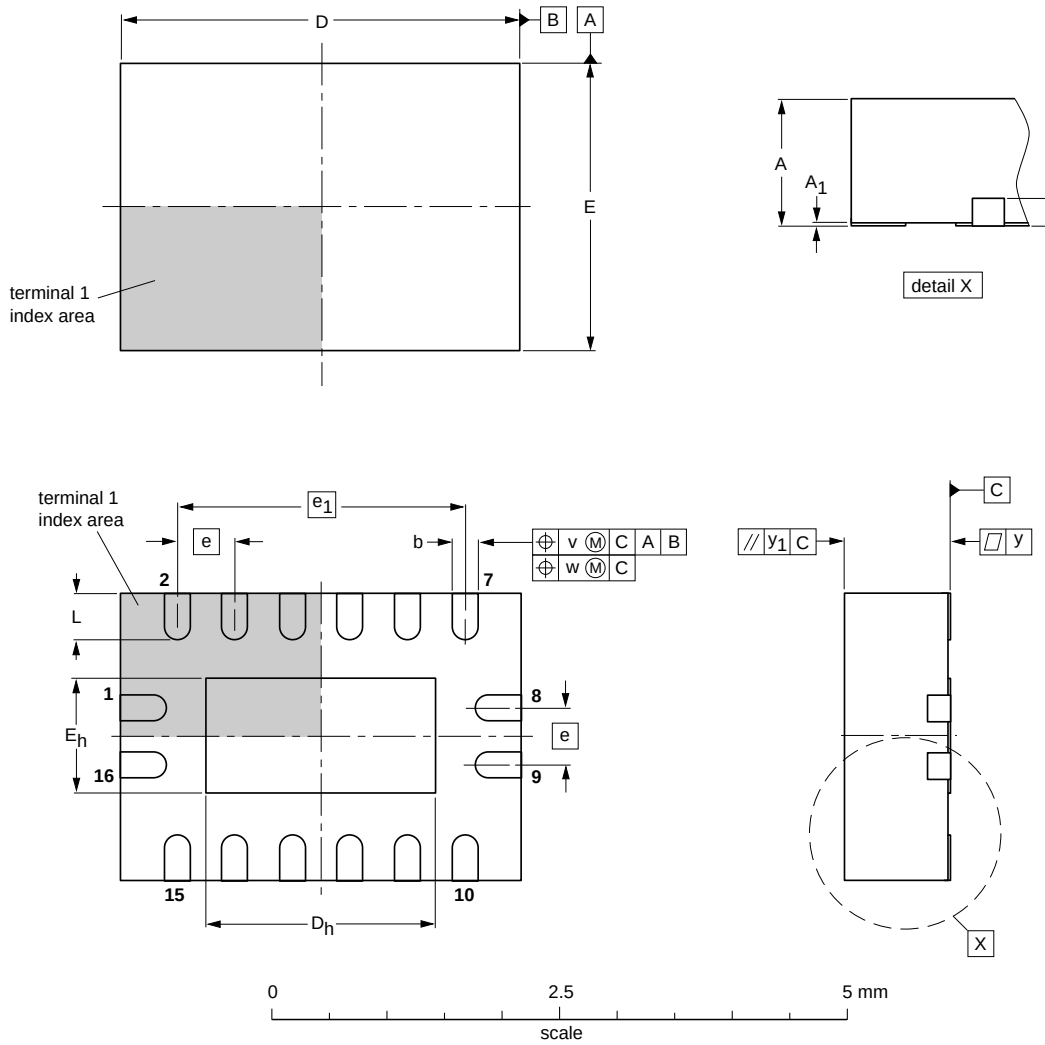

DIMENSIONS (mm are the original dimensions)

UNIT	A(1) max.	A_1	b	c	D(1)	D_h	E(1)	E_h	e	e_1	L	v	w	y	y_1
mm	1	0.05 0.00	0.30 0.18	0.2	3.6 3.4	2.15 1.85	2.6 2.4	1.15 0.85	0.5	2.5	0.5 0.3	0.1	0.05	0.05	0.1

Note

1. Plastic or metal protrusions of 0.075 mm maximum per side are not included.

OUTLINE VERSION	REFERENCES				EUROPEAN PROJECTION	ISSUE DATE
	IEC	JEDEC	JEITA			
SOT763-1	- - -	MO-241	- - -			~~02-10-17~~ 03-01-27

Fig 11. Package outline SOT763-1 (DHVQFN16)

All information provided in this document is subject to legal disclaimers.

© NXP B.V. 2012. All rights reserved.

13. Abbreviations

Table 10. Abbreviations

Acronym	Description
CMOS	Complementary Metal Oxide Semiconductor
DUT	Device Under Test
ESD	ElectroStatic Discharge
HBM	Human Body Model
LSTTL	Low-power Schottky Transistor-Transistor Logic
MM	Machine Model
MIL	Military

14. Revision history

Table 11. Revision history

Document ID	Release date	Data sheet status	Change notice	Doc. number	Supersedes
74HC_HCT138_Q100 v.1	20120716	Product data sheet	-	-	-

All information provided in this document is subject to legal disclaimers.

© NXP B.V. 2012. All rights reserved.

15. Legal information

15.1 Data sheet status

Document status[1][2]	Product status[3]	Definition
Objective [short] data sheet	Development	This document contains data from the objective specification for product development.
Preliminary [short] data sheet	Qualification	This document contains data from the preliminary specification.
Product [short] data sheet	Production	This document contains the product specification.

[1] Please consult the most recently issued document before initiating or completing a design.

[2] The term 'short data sheet' is explained in section "Definitions".

[3] The product status of device(s) described in this document may have changed since this document was published and may differ in case of multiple devices. The latest product status information is available on the Internet at URL http://www.nxp.com.

15.2 Definitions

Draft — The document is a draft version only. The content is still under internal review and subject to formal approval, which may result in modifications or additions. NXP Semiconductors does not give any representations or warranties as to the accuracy or completeness of information included herein and shall have no liability for the consequences of use of such information.

Short data sheet — A short data sheet is an extract from a full data sheet with the same product type number(s) and title. A short data sheet is intended for quick reference only and should not be relied upon to contain detailed and full information. For detailed and full information see the relevant full data sheet, which is available on request via the local NXP Semiconductors sales office. In case of any inconsistency or conflict with the short data sheet, the full data sheet shall prevail.

Product specification — The information and data provided in a Product data sheet shall define the specification of the product as agreed between NXP Semiconductors and its customer, unless NXP Semiconductors and customer have explicitly agreed otherwise in writing. In no event however, shall an agreement be valid in which the NXP Semiconductors product is deemed to offer functions and qualities beyond those described in the Product data sheet.

15.3 Disclaimers

Limited warranty and liability — Information in this document is believed to be accurate and reliable. However, NXP Semiconductors does not give any representations or warranties, expressed or implied, as to the accuracy or completeness of such information and shall have no liability for the consequences of use of such information. NXP Semiconductors takes no responsibility for the content in this document if provided by an information source outside of NXP Semiconductors.

In no event shall NXP Semiconductors be liable for any indirect, incidental, punitive, special or consequential damages (including - without limitation - lost profits, lost savings, business interruption, costs related to the removal or replacement of any products or rework charges) whether or not such damages are based on tort (including negligence), warranty, breach of contract or any other legal theory.

Notwithstanding any damages that customer might incur for any reason whatsoever, NXP Semiconductors' aggregate and cumulative liability towards customer for the products described herein shall be limited in accordance with the *Terms and conditions of commercial sale* of NXP Semiconductors.

Right to make changes — NXP Semiconductors reserves the right to make changes to information published in this document, including without limitation specifications and product descriptions, at any time and without notice. This document supersedes and replaces all information supplied prior to the publication hereof.

Suitability for use in automotive applications — This NXP Semiconductors product has been qualified for use in automotive applications. Unless otherwise agreed in writing, the product is not designed, authorized or warranted to be suitable for use in life support, life-critical or safety-critical systems or equipment, nor in applications where failure or malfunction of an NXP Semiconductors product can reasonably be expected to result in personal injury, death or severe property or environmental damage. NXP Semiconductors and its suppliers accept no liability for inclusion and/or use of NXP Semiconductors products in such equipment or applications and therefore such inclusion and/or use is at the customer's own risk.

Applications — Applications that are described herein for any of these products are for illustrative purposes only. NXP Semiconductors makes no representation or warranty that such applications will be suitable for the specified use without further testing or modification.

Customers are responsible for the design and operation of their applications and products using NXP Semiconductors products, and NXP Semiconductors accepts no liability for any assistance with applications or customer product design. It is customer's sole responsibility to determine whether the NXP Semiconductors product is suitable and fit for the customer's applications and products planned, as well as for the planned application and use of customer's third party customer(s). Customers should provide appropriate design and operating safeguards to minimize the risks associated with their applications and products.

NXP Semiconductors does not accept any liability related to any default, damage, costs or problem which is based on any weakness or default in the customer's applications or products, or the application or use by customer's third party customer(s). Customer is responsible for doing all necessary testing for the customer's applications and products using NXP Semiconductors products in order to avoid a default of the applications and the products or of the application or use by customer's third party customer(s). NXP does not accept any liability in this respect.

Limiting values — Stress above one or more limiting values (as defined in the Absolute Maximum Ratings System of IEC 60134) will cause permanent damage to the device. Limiting values are stress ratings only and (proper) operation of the device at these or any other conditions above those given in the Recommended operating conditions section (if present) or the Characteristics sections of this document is not warranted. Constant or repeated exposure to limiting values will permanently and irreversibly affect the quality and reliability of the device.

Terms and conditions of commercial sale — NXP Semiconductors products are sold subject to the general terms and conditions of commercial sale, as published at http://www.nxp.com/profile/terms, unless otherwise agreed in a valid written individual agreement. In case an individual agreement is concluded only the terms and conditions of the respective agreement shall apply. NXP Semiconductors hereby expressly objects to applying the customer's general terms and conditions with regard to the purchase of NXP Semiconductors products by customer.

All information provided in this document is subject to legal disclaimers.

© NXP B.V. 2012. All rights reserved.

No offer to sell or license — Nothing in this document may be interpreted or construed as an offer to sell products that is open for acceptance or the grant, conveyance or implication of any license under any copyrights, patents or other industrial or intellectual property rights.

Export control — This document as well as the item(s) described herein may be subject to export control regulations. Export might require a prior authorization from competent authorities.

Translations — A non-English (translated) version of a document is for reference only. The English version shall prevail in case of any discrepancy between the translated and English versions.

15.4 Trademarks

Notice: All referenced brands, product names, service names and trademarks are the property of their respective owners.

16. Contact information

For more information, please visit: **http://www.nxp.com**

For sales office addresses, please send an email to: **salesaddresses@nxp.com**

All information provided in this document is subject to legal disclaimers.

© NXP B.V. 2012. All rights reserved.

17. Contents

1 General description 1
2 Features and benefits 1
3 Ordering information 2
4 Functional diagram 2
5 Pinning information 3
5.1 Pinning 3
5.2 Pin description 4
6 Functional description 4
7 Limiting values 5
8 Recommended operating conditions 5
9 Static characteristics 6
10 Dynamic characteristics 8
11 Waveforms 10
12 Package outline 12
13 Abbreviations 15
14 Revision history 15
15 Legal information 16
15.1 Data sheet status 16
15.2 Definitions 16
15.3 Disclaimers 16
15.4 Trademarks 17
16 Contact information 17
17 Contents 18

Please be aware that important notices concerning this document and the product(s) described herein, have been included in section 'Legal information'.

© NXP B.V. 2012. All rights reserved.

For more information, please visit: http://www.nxp.com
For sales office addresses, please send an email to: salesaddresses@nxp.com

Date of release: 16 July 2012
Document identifier: 74HC_HCT138_Q100

OCEAN CHIPS
Океан Электроники
Поставка электронных компонентов

Компания «Океан Электроники» предлагает заключение долгосрочных отношений при поставках импортных электронных компонентов на взаимовыгодных условиях!

Наши преимущества:

- Поставка оригинальных импортных электронных компонентов напрямую с производств Америки, Европы и Азии, а так же с крупнейших складов мира;
- Широкая линейка поставок активных и пассивных импортных электронных компонентов (более 30 млн. наименований);
- Поставка сложных, дефицитных, либо снятых с производства позиций;
- Оперативные сроки поставки под заказ (от 5 рабочих дней);
- Экспресс доставка в любую точку России;
- Помощь Конструкторского Отдела и консультации квалифицированных инженеров;
- Техническая поддержка проекта, помощь в подборе аналогов, поставка прототипов;
- Поставка электронных компонентов под контролем ВП;
- Система менеджмента качества сертифицирована по Международному стандарту ISO 9001;
- При необходимости вся продукция военного и аэрокосмического назначения проходит испытания и сертификацию в лаборатории (по согласованию с заказчиком);
- Поставка специализированных компонентов военного и аэрокосмического уровня качества (Xilinx, Altera, Analog Devices, Intersil, Interpoint, Microsemi, Actel, Aeroflex, Peregrine, VPT, Syfer, Eurofarad, Texas Instruments, MS Kennedy, Miteq, Cobham, E2V, MA-COM, Hittite, Mini-Circuits, General Dynamics и др.);

Компания «Океан Электроники» является официальным дистрибьютором и эксклюзивным представителем в России одного из крупнейших производителей разъемов военного и аэрокосмического назначения **«JONHON»**, а так же официальным дистрибьютором и эксклюзивным представителем в России производителя высокотехнологичных и надежных решений для передачи СВЧ сигналов **«FORSTAR»**.

AVIC JONHON

«JONHON» (основан в 1970 г.)

Разъемы специального, военного и аэрокосмического назначения:

(Применяются в военной, авиационной, аэрокосмической, морской, железнодорожной, горно- и нефтедобывающей отраслях промышленности)

«FORSTAR» (основан в 1998 г.)

ВЧ соединители, коаксиальные кабели, кабельные сборки и микроволновые компоненты:

(Применяются в телекоммуникациях гражданского и специального назначения, в средствах связи, РЛС, а так же военной, авиационной и аэрокосмической отраслях промышленности).

FORSTAR®

Телефон: 8 (812) 309-75-97 (многоканальный)
Факс: 8 (812) 320-03-32
Электронная почта: ocean@oceanchips.ru
Web: http://oceanchips.ru/
Адрес: 198099, г. Санкт-Петербург, ул. Калинина, д. 2, корп. 4, лит. А