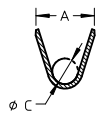

SECTION C-C

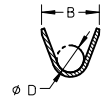

SECTION B-B

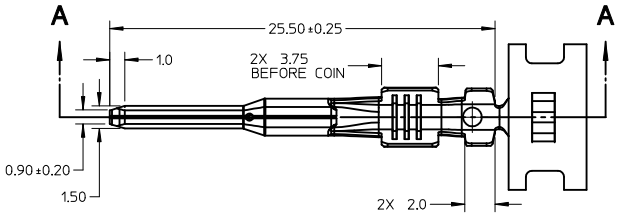

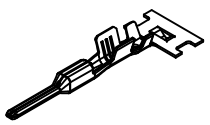

ISO VIEW
SCALE 2:1

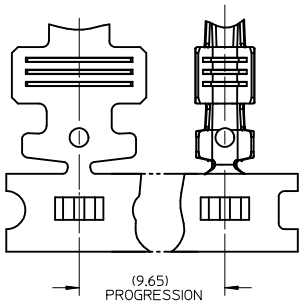

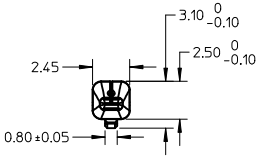

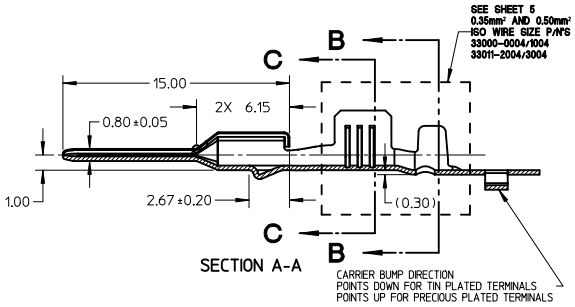

SECTION A-A

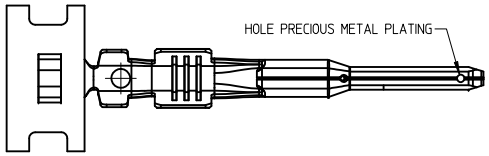

PRECIOUS METAL PLATED BLADE

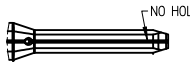

TIN PLATED BLADE

GENERAL NOTES: (UNLESS OTHERWISE SPECIFIED)

1. MATING TERMINAL SHOWN ON SD-33012-002
2. MATERIAL: ASTM B422, UNS C19025, HR04
   THICKNESS: 0.30 mm ±0.01
   TEMPER: FULL HARD (REF)
   TENSILE: 496-572 MPA
3. TIN PLATED TERMINAL FINISH:
   OVERALL UNDERPLATE ELECTRODEPOSITED NICKEL
   OVERALL ELECTRODEPOSITED REFLOW TIN
4. GOLD PLATED TERMINAL FINISH
   OVERALL UNDERPLATE ELECTRODEPOSITED DUCTILE SULFAMATE NICKEL
   CONTACT AREA - ELECTRODEPOSITED GOLD
   GRIP AREA - ELECTRODEPOSITED 100% TIN MATTE FINISH
5. SILVER PLATED TERMINAL FINISH
   OVERALL UNDERPLATE ELECTRODEPOSITED DUCTILE SULFAMATE NICKEL
   CONTACT AREA - ELECTRODEPOSITED PURE SILVER (0.5% MAX IMPURITIES) SEMI-BRIGHT FINISH
   - SILVER ANTI-TARNISH : EVABRITE
   GRIP AREA - ELECTRODEPOSITED 100% TIN MATTE FINISH
6. MEETS CRIMP PERFORMANCE SPECIFICATION SAE/USCAR-21 (RELEASED: 08/25/01)
7. MEETS PERFORMANCE STANDARD FOR AUTOMOTIVE ELECTRICAL CONNECTOR SYSTEMS SAE/USCAR-2 REV 3 (APRIL 2001)
8. MEETS FIELD CORRELATED LIFE TEST SAE/USCAR-20 (NOVEMBER 2001)
9. MEETS WIRING COMPONENT DESIGN GUIDLINES SAE/USCAR-12 REV 2 (DECEMBER 2001)
10. MEETS ELECTRICAL CONNECTION SYSTEM DESIGN SPECIFICATION (SDS) REV 11 (5/2002)
11. REFERENCE PK-31300-516 FOR REEL DIRECTION
12. REFERENCE AS-33000-001 FOR CRIMP INFORMATION

ENTER DESCRIPTION EC NO: UAU2011-1208 2011/06/28 DRWN:ADHIR CH'KD: APPR:BMOSER 2011/07/06 DESCRIPTION C12 REV	QUALITY SYMBOLS =0 =0 =0	GENERAL TOLERANCES (UNLESS SPECIFIED) mm / INCH 4 PLACES ± --- / ± --- 3 PLACES ± --- / ± --- 2 PLACES ± 0.1 / ± --- 1 PLACE ± 0.3 / ± --- ANGULAR ± 3 ° DRAFT WHERE APPLICABLE MUST REMAIN WITHIN DIMENSIONS	DIMENSION STYLE MM ONLY DRAWN BY L.PULLIAM DATE 2006/01/31 CHECKED BY A.DHIR DATE 2006/02/01 APPROVED BY B.MOSER DATE 2006/02/02 MATERIAL NO. SEE TABLE SIZE C	SCALE 4:1 DESIGN UNITS METRIC THIRD ANGLE PROJECTION TITLE MX150 1.5MM BLADE TERMINAL molex MOLEX INCORPORATED DOCUMENT NO. SD-33000-001 SHEET NO. 1 OF 5 THIS DRAWING CONTAINS INFORMATION THAT IS PROPRIETARY TO MOLEX INCORPORATED AND SHOULD NOT BE USED WITHOUT WRITTEN PERMISSION		

TABLE										
SUPPLIER PART NUMBER		PLATING	GRIP CODE	WIRE APPLICATION		A ±0.30	B ±0.30	C ±0.30	D ±0.30	COMMENTS
RIGHT PAYOFF DIRECTION B	LEFT PAYOFF DIRECTION D			SAE (AWG)	METRIC (mm²)					
33000-0001	33000-1001	TIN	14	14	2.0-1.5	3.9	3.8	1.7	1.6	
33000-0002	33000-1002	TIN	18	16/18/20	1.0-0.75	3.3	3.1	1.3	1.4	
33000-0003	33000-1003	TIN	22	22	0.35-0.50	2.5	2.6	0.9	1.0	
33000-0004	33000-1004	TIN	M3	N/A	0.35-0.50	2.5	2.7	0.9	1.54±0.1	PREFERRED TERMINAL FOR USE IN SEALED APPLICATION WITH 0.35& 0.50 WIRES (OD 1.2-1.7mm)
33011-1002	33011-0002	GOLD	14	14	2.0-1.5	3.9	3.8	1.7	1.6	
33011-1004	33011-0004	GOLD	18	16/18/20	1.0-0.75	3.3	3.1	1.3	1.4	
33011-1006	33011-0006	GOLD	22	22	0.35-0.50	2.5	2.6	0.9	1.0	
33011-2003	33011-3003	SILVER	14	14	2.0-1.5	3.9	3.8	1.7	1.6	
33011-2002	33011-3002	SILVER	18	16/18/20	1.0-0.75	3.3	3.1	1.3	1.4	
33011-2001	33011-3001	SILVER	22	22	0.35-0.50	2.5	2.6	0.9	1.0	
33011-2004	33011-3004	SILVER	M3	N/A	0.35-0.50	2.5	2.7	0.9	1.54±0.1	PREFERRED TERMINAL FOR USE IN SEALED APPLICATION WITH 0.35& 0.50 WIRES (OD 1.2-1.7mm) USE IN CLASS 3 (125° C) APPLICATIONS ONLY

ENTER DESCRIPTION
EC NO: UAU2011-1208 2011/06/28
DRWN:ADHIR
CH'KD:
APPR:BMOSER 2011/07/06
DESCRIPTION
REV
C12

QUALITY SYMBOLS
=0
=0
=0

GENERAL TOLERANCES (UNLESS SPECIFIED)

	mm	INCH
4 PLACES	± ---	± ---
3 PLACES	± ---	± ---
2 PLACES	± 0.1	± ---
1 PLACE	± 0.3	± ---
ANGULAR ± 3 °		

DRAFT WHERE APPLICABLE MUST REMAIN WITHIN DIMENSIONS

DIMENSION STYLE: MM ONLY
SCALE
DESIGN UNITS: METRIC
THIRD ANGLE PROJECTION

DRAWN BY: L.PULLIAM DATE: 2006/01/31
CHECKED BY: A.DHIR DATE: 2006/02/01
APPROVED BY: B.MOSER DATE: 2006/02/02
MATERIAL NO.: SEE TABLE

TITLE: MX150 1.5MM BLADE TERMINAL

molex MOLEX INCORPORATED

DOCUMENT NO.: SD-33000-001
SHEET NO.: 2 OF 5

SIZE: C

THIS DRAWING CONTAINS INFORMATION THAT IS PROPRIETARY TO MOLEX INCORPORATED AND SHOULD NOT BE USED WITHOUT WRITTEN PERMISSION

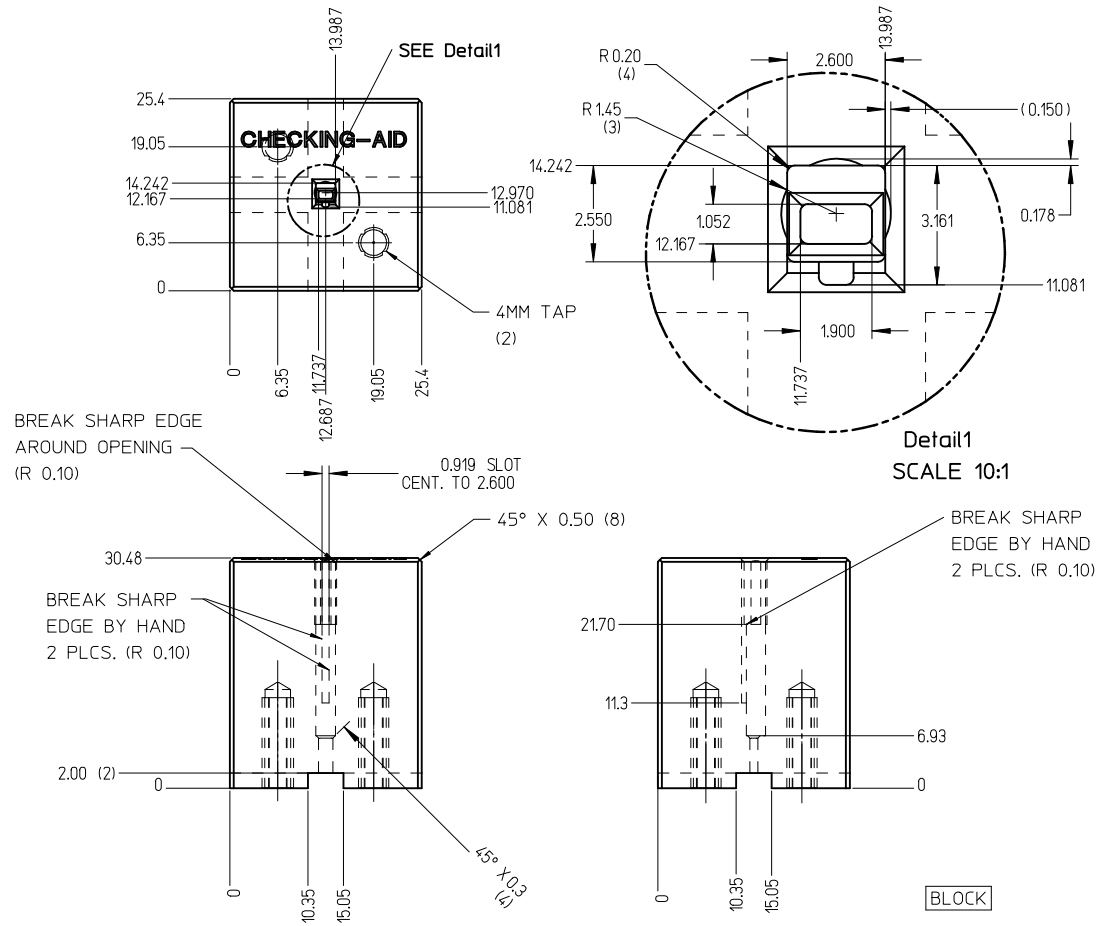

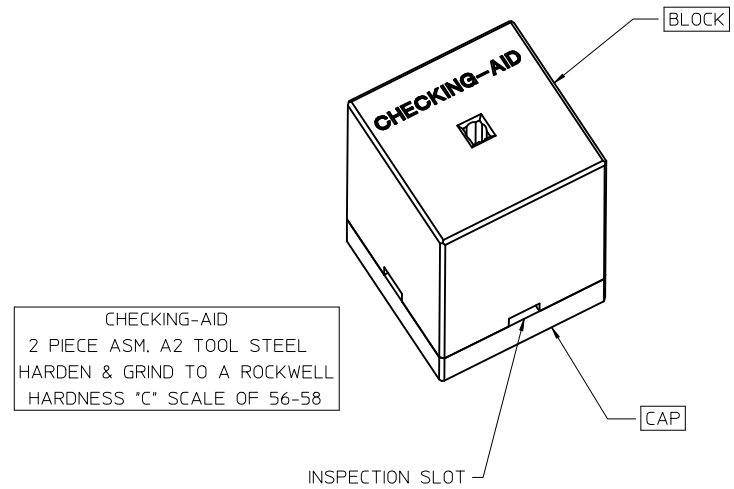

CHECKING-AID
2 PIECE ASM. A2 TOOL STEEL
HARDEN & GRIND TO A ROCKWELL
HARDNESS "C" SCALE OF 56-58

CHECKING AID TOLERANCE
.XXX = .005
.XX = .03
.X = .3

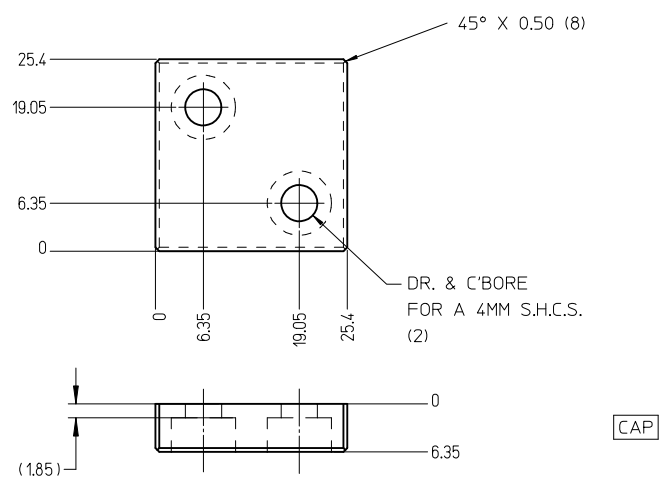

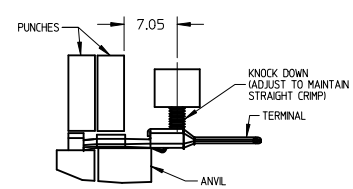

CRIMP TOOLING
SCALE 2:1

CRIMP REQUIREMENTS:

1. CRIMP STRAIGHTNESS MUST BE MAINTAINED. USE A KNOCKDOWN TOOL LOCATED AS SHOWN. TERMINAL BOX MUST NOT BE DEFORMED
2. AFTER CRIMPING, THE TERMINAL AND WIRE MUST FIT FREELY INTO THE CHECKING AID 33000-700. PROPER INSERTION DEPTH IS MET WHEN BLADE TIP STOPS ON CAP. SLOTS PROVIDED TO VISUALLY INSPECT STOPAGE OF PIN TIP.
3. FOR OTHER MECHANICAL REQUIREMENTS ON CRIMPED TERMINALS, REFER TO SAE/USCAR-21 (5-13-02) SECTIONS 4.2 (VISUAL INSPECTION), 4.3 (CROSS SECTION ANALYSIS) AND 4.4 (CONDUCTOR CRIMP PULLOUT FORCE)

ENTER DESCRIPTION
EC NO: UAU2011-1208
DRWN:ADHIR 2011/06/28
CH'KD:
APPR:BMOSER 2011/07/06
DESCRIPTION
REV
C12

QUALITY SYMBOLS
F_A =0
F_C =0
F_P =0

GENERAL TOLERANCES (UNLESS SPECIFIED)

	mm	INCH
4 PLACES	± ---	± ---
3 PLACES	± ---	± ---
2 PLACES	± 0.1	± ---
1 PLACE	± 0.3	± ---

ANGULAR ± 3 °

DRAFT WHERE APPLICABLE MUST REMAIN WITHIN DIMENSIONS

DIMENSION STYLE: MM ONLY
SCALE: 2:1
DESIGN UNITS: METRIC
THIRD ANGLE PROJECTION

DRAWN BY	L.PULLIAM	DATE 2006/01/31
CHECKED BY	A.DHIR	DATE 2006/02/01
APPROVED BY	B.MOSER	DATE 2006/02/02

TITLE: MX150 1.5MM BLADE TERMINAL

molex MOLEX INCORPORATED

MATERIAL NO.: SEE TABLE
DOCUMENT NO.: SD-33000-001
SHEET NO.: 3 OF 5
SIZE: C

THIS DRAWING CONTAINS INFORMATION THAT IS PROPRIETARY TO MOLEX INCORPORATED AND SHOULD NOT BE USED WITHOUT WRITTEN PERMISSION

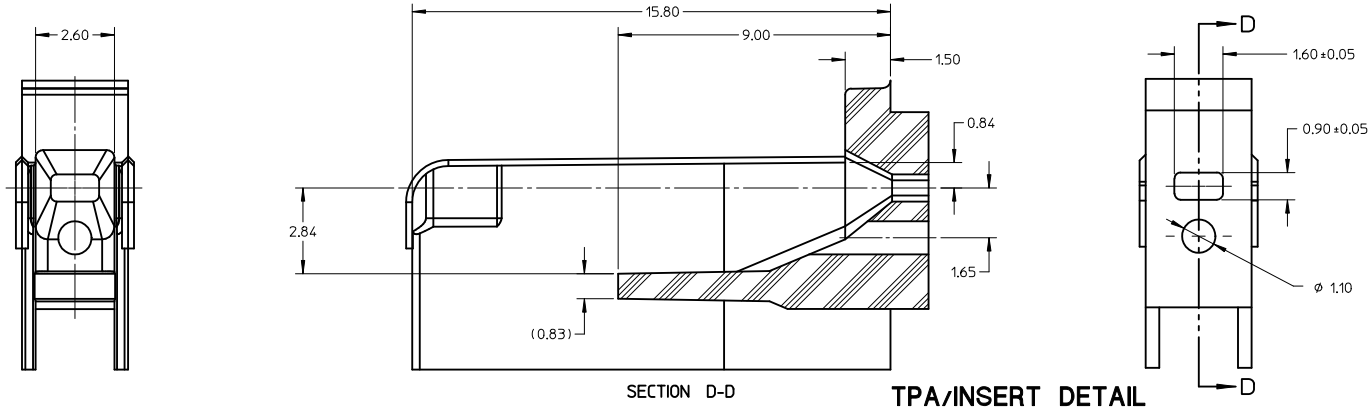

SECTION D-D

TPA/INSERT DETAIL

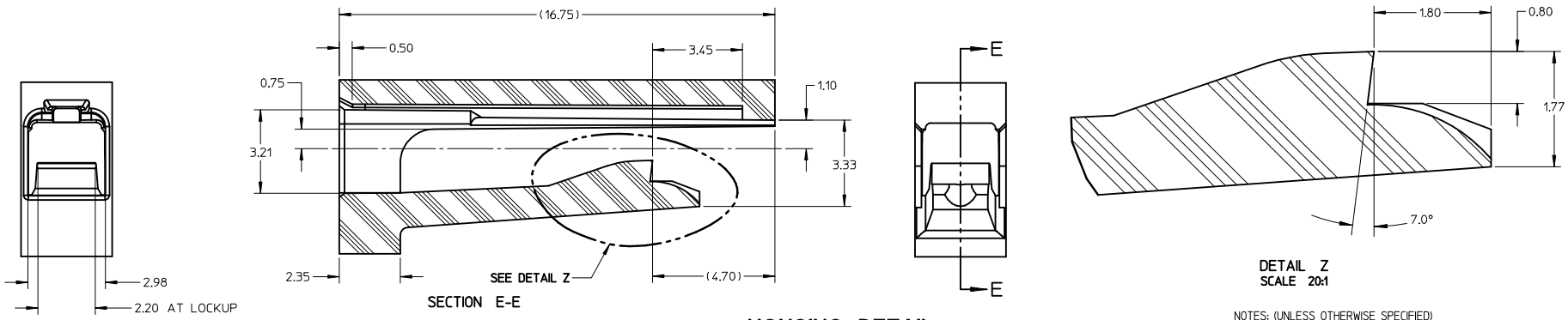

SECTION E-E

DETAIL Z
SCALE 20:1

HOUSING DETAIL

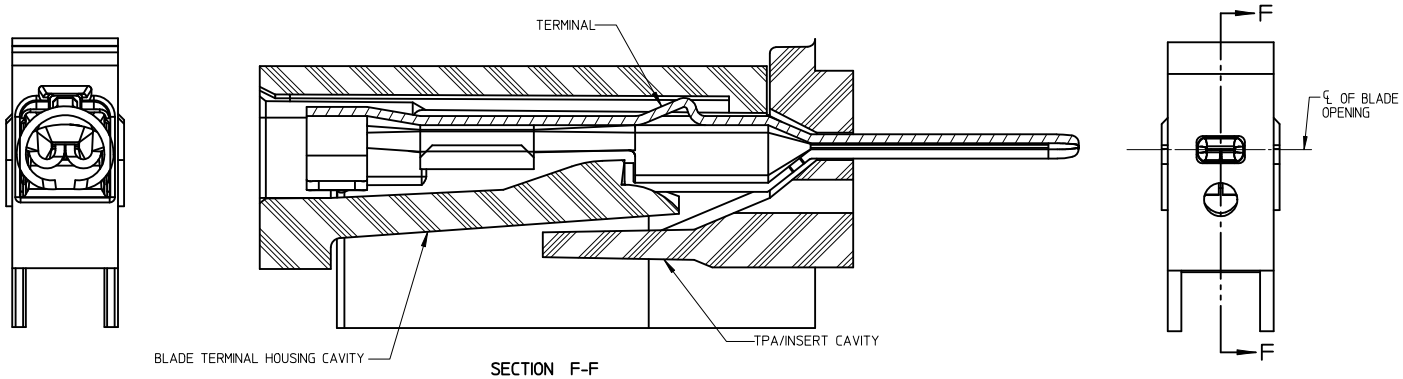

SECTION F-F

NOTES: (UNLESS OTHERWISE SPECIFIED)

1. TOLERANCES: LINEAR ±0.10
   ANGULAR 3°
2. ALL DRAFT WITHIN TOLERANCE
3. MAX RADII ON ALL CORNERS SHOWN SHARP: 0.10
4. MAX FLASH PERMISSIBLE: 0.1
5. EJECTOR PIN MARKS PERMISSIBLE IF FLUSH TO 0.25 BELOW SURFACE
6. MATERIAL: HOUSING/FINGER SPECIFICATION ENGINEERED FOR MATERIAL WITH THE FOLLOWING PROPERTIES:
   A. FLEXURAL MODULUS = 4,500 TO 9,400 MPa PER ASTM TEST D790
   B. ELONGATION AT YIELD = 2.3% OR BETTER PER ASTM TEST D638 TYPE V
7. CAVITY SPEC FOR USE ONLY WITH MOLEX BLADE TERMINAL PART NUMBERS (EXCEPT P/N'S FOR UNSEALED APPLICATIONS) SPECIFIED ELSEWHERE ON THIS DRAWING

BLADE CAVITY ASSEMBLY VIEWS

ENTER DESCRIPTION EC NO: UAU2011-1208 DRWN:ADHIR 2011/06/28 CH'KD: APPR:BMOSER 2011/07/06 C12	REV	DESCRIPTION	QUALITY SYMBOLS F_A =0 F_C =0 F_P =0	GENERAL TOLERANCES (UNLESS SPECIFIED) mm / INCH 4 PLACES ± --- / ± --- 3 PLACES ± --- / ± --- 2 PLACES ± 0.1 / ± --- 1 PLACE ± 0.3 / ± --- ANGULAR ± 3 ° DRAFT WHERE APPLICABLE MUST REMAIN WITHIN DIMENSIONS	DIMENSION STYLE MM ONLY DRAWN BY L.PULLIAM DATE 2006/01/31 CHECKED BY A.DHIR DATE 2006/02/01 APPROVED BY B.MOSER DATE 2006/02/02 MATERIAL NO. SEE TABLE	SCALE	DESIGN UNITS METRIC	THIRD ANGLE PROJECTION TITLE MX150 1.5MM BLADE TERMINAL molex MOLEX INCORPORATED DOCUMENT NO. SD-33000-001 SHEET NO. 4 OF 5

SIZE C

THIS DRAWING CONTAINS INFORMATION THAT IS PROPRIETARY TO MOLEX INCORPORATED AND SHOULD NOT BE USED WITHOUT WRITTEN PERMISSION

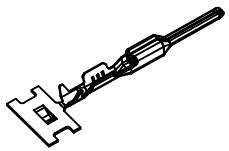

ISO VIEW
SCALE 2:1

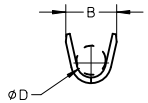

SECTION BB-BB

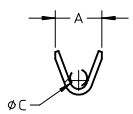

SECTION CC-CC

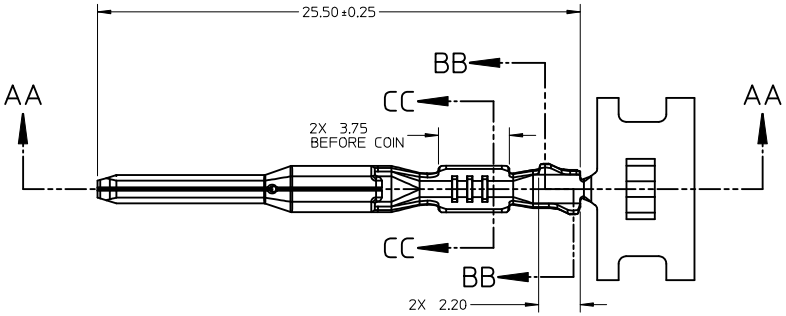

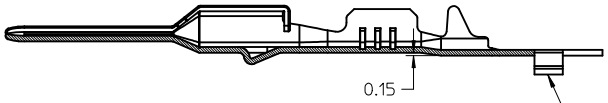

SECTION AA-AA

P/N'S 33000-0004/1004
33011-2004/3004

CARRIER BUMP DIRECTION
POINTS DOWN FOR TIN PLATED TERMINALS
POINTS UP FOR PRECIOUS METAL PLATED TERMINALS

ENTER DESCRIPTION EC NO: UAU2011-1208 DRWN:ADHIR 2011/06/28 CH'KD: APPR:BMOSER 2011/07/06	QUALITY SYMBOLS	GENERAL TOLERANCES (UNLESS SPECIFIED)	DIMENSION STYLE MM ONLY	SCALE 5:1	DESIGN UNITS METRIC	THIRD ANGLE PROJECTION	
		mm / INCH	DRAWN BY L.PULLIAM DATE 2006/01/31	TITLE MX150 1.5MM BLADE TERMINAL			
		4 PLACES ± --- ± ---	CHECKED BY A.DHIR DATE 2006/02/01				
		3 PLACES ± --- ± ---	APPROVED BY B.MOSER DATE 2006/02/02	MOLEX INCORPORATED			
		2 PLACES ± 0.1 ± ---	MATERIAL NO. SEE TABLE	DOCUMENT NO. SD-33000-001	SHEET NO. 5 OF 5		
		1 PLACE ± 0.3 ± ---	SIZE C	THIS DRAWING CONTAINS INFORMATION THAT IS PROPRIETARY TO MOLEX INCORPORATED AND SHOULD NOT BE USED WITHOUT WRITTEN PERMISSION			
		ANGULAR ± 3 °					
		DRAFT WHERE APPLICABLE MUST REMAIN WITHIN DIMENSIONS					
C12	REV / DESCRIPTION						

tb_frame_C_P_AM_T
Rev. F 2009/06/18

OCEAN CHIPS
Океан Электроники
Поставка электронных компонентов

Компания «Океан Электроники» предлагает заключение долгосрочных отношений при поставках импортных электронных компонентов на взаимовыгодных условиях!

Наши преимущества:

- Поставка оригинальных импортных электронных компонентов напрямую с производств Америки, Европы и Азии, а так же с крупнейших складов мира;
- Широкая линейка поставок активных и пассивных импортных электронных компонентов (более 30 млн. наименований);
- Поставка сложных, дефицитных, либо снятых с производства позиций;
- Оперативные сроки поставки под заказ (от 5 рабочих дней);
- Экспресс доставка в любую точку России;
- Помощь Конструкторского Отдела и консультации квалифицированных инженеров;
- Техническая поддержка проекта, помощь в подборе аналогов, поставка прототипов;
- Поставка электронных компонентов под контролем ВП;
- Система менеджмента качества сертифицирована по Международному стандарту ISO 9001;
- При необходимости вся продукция военного и аэрокосмического назначения проходит испытания и сертификацию в лаборатории (по согласованию с заказчиком);
- Поставка специализированных компонентов военного и аэрокосмического уровня качества (Xilinx, Altera, Analog Devices, Intersil, Interpoint, Microsemi, Actel, Aeroflex, Peregrine, VPT, Syfer, Eurofarad, Texas Instruments, MS Kennedy, Miteq, Cobham, E2V, MA-COM, Hittite, Mini-Circuits, General Dynamics и др.);

Компания «Океан Электроники» является официальным дистрибьютором и эксклюзивным представителем в России одного из крупнейших производителей разъемов военного и аэрокосмического назначения **«JONHON»**, а так же официальным дистрибьютором и эксклюзивным представителем в России производителя высокотехнологичных и надежных решений для передачи СВЧ сигналов **«FORSTAR»**.

AVIC JONHON

«JONHON» (основан в 1970 г.)

Разъемы специального, военного и аэрокосмического назначения:

(Применяются в военной, авиационной, аэрокосмической, морской, железнодорожной, горно- и нефтедобывающей отраслях промышленности)

«FORSTAR» (основан в 1998 г.)

ВЧ соединители, коаксиальные кабели, кабельные сборки и микроволновые компоненты:

(Применяются в телекоммуникациях гражданского и специального назначения, в средствах связи, РЛС, а так же военной, авиационной и аэрокосмической отраслях промышленности).

FORSTAR®

Телефон: 8 (812) 309-75-97 (многоканальный)
Факс: 8 (812) 320-03-32
Электронная почта: ocean@oceanchips.ru
Web: http://oceanchips.ru/
Адрес: 198099, г. Санкт-Петербург, ул. Калинина, д. 2, корп. 4, лит. А