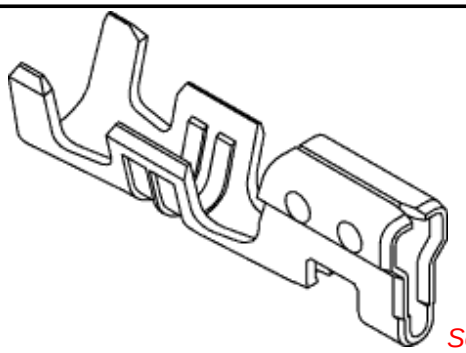
This document was generated on 04/16/2010

PLEASE CHECK WWW.MOLEX.COM FOR LATEST PART INFORMATION

Part Number: 0508029001
Status: Active
Description: 2.50mm (.098") Pitch Crimp Terminal, Female, Brass, Reel



Series image - Reference only

Documents:

3D Model
Drawing (PDF)
Product Specification PS-51191-002 (PDF)
Product Specification PS-51191-003 (PDF)
RoHS Certificate of Compliance (PDF)

General

Product Family	Crimp Terminals
Series	50802
Crimp Quality Equipment	Yes
Product Name	N/A

Physical

Gender	Female
Material - Metal	Brass
Material - Plating Mating	Tin
Material - Plating Termination	Tin
Packaging Type	Reel
Plating min: Mating (µin)	35
Plating min: Mating (µm)	0.88
Plating min: Termination (µin)	35
Plating min: Termination (µm)	0.88
Termination Interface: Style	Crimp or Compression
Wire Insulation Diameter	1.15-1.90mm (.045-.075")
Wire Size AWG	22, 24, 26, 28
Wire Size mm²	N/A

Material Info

Reference - Drawing Numbers

Product Specification	PS-51191-002, PS-51191-003, RPS-51191-006, RPS-51191-007
Sales Drawing	SD-50802-002

EU RoHS
ELV and RoHS Compliant
REACH SVHC
Contains SVHC: No
Halogen-Free Status
Halogen-Free

China RoHS

Need more information on product environmental compliance?

Email productcompliance@molex.com
For a multiple part number RoHS Certificate of Compliance, click here

Please visit the Contact Us section for any non-product compliance questions.

Search Parts in this Series
50802Series

Mates With
5241

Use With
51191

Application Tooling | **FAQ**

Tooling specifications and manuals are found by selecting the products below. Crimp Height Specifications are then contained in the Application Tooling Specification document.

Global

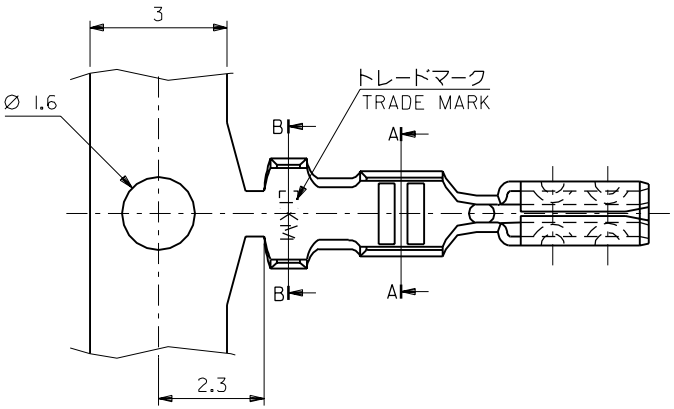
Description	Product #
Hand Crimp Tool	0638115200
T2 Terminator Tooling Die	0639104600
FineAdjust™ Applicator for SPOX™ Wire-to-Board and Wire-to-	0639004600

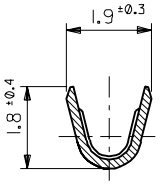
Wire Terminal, 22-28 AWG	
Japan	
Description	**Product #**
Applicator for M211A Bench Press, 22-28 AWG, for 5103 and 50802 Crimp Terminal	0011260023

This document was generated on 04/16/2010

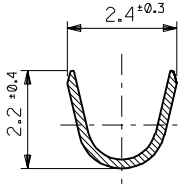
PLEASE CHECK WWW.MOLEX.COM FOR LATEST PART INFORMATION

DWG. NO. SD-50802-002

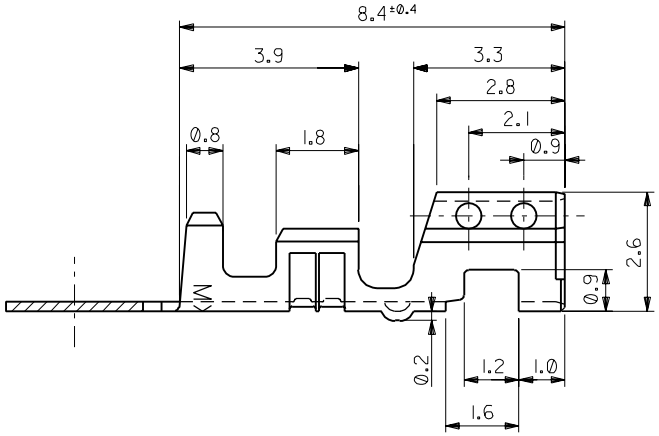


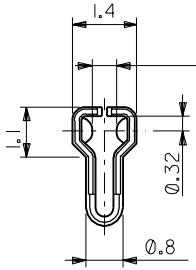


断面 A-A
SECT. A-A



断面 B-B
SECT. B-B





挿抜力により管理
CONTROL TO INSERTION & EXTRACTION FORCE.

注記 NOTES:
1. 適合ハウジング：
APPLICABLE HOUSING: 51191-**00

錫メッキ済リン青銅 PRE-TINNED PHOS-BRO.	50802-8100	バラ状 LOOSE
錫メッキ済リン青銅 PRE-TINNED PHOS-BRO.	50802-8000	連鎖状 CHAIN
錫メッキ済黄銅 PRE-TINNED BRASS	50802-9101	バラ状 LOOSE
錫メッキ済黄銅 PRE-TINNED BRASS	50802-9001	連鎖状 CHAIN
材料 MATERIAL	MATERIAL NO.	端子形状 FORM

MODEL NO. 50802-****

DO NOT SCALE DRAWING

ECN4 NO. DRWN: CH'K: APPR:	ECN3 NO. DRWN: CH'K: APPR:	ECN2 NO. DRWN: CH'K: APPR:	ECN1 NO. DRWN: CH'K: APPR:	ECN0 NO. JC80766 DRWN: S.MATSUZAKI '98/4/9 CH'K: S.KUNISHI '98/4/10 APPR: M.FUKUSHIMA '98/4/10	DESCRIPTION RELEASED
				Ø	REV

MATERIAL 材料: 表参照 (t=0.203) SEE TABLE

FINISH 仕上げ

WIRE RANGE 適用電線範囲: AWG #22～#28 0.33～0.08mm²

INS. RANGE 被覆外径: Ø1.15～1.9

GENERAL TOLERANCES: (UNLESS SPECIFIED) 一般公差

10 UNDER 未満	±0.2
10 OVER 以上 30 UNDER 未満	±0.25
30 OVER 以上	±0.3
ANGLE 角度	±3°

SCALE 2/1 | DESIGN UNITS ☒mm ☐INCH | THIRD ANGLE PROJECTION | DIMENSIONS: ☐mm/INCH ☐INCH/mm ☒mm ONLY | SHT | REV | REVISE ON CAD ONLY

DRAWN BY & DATE: S.MATSUZAKI '98/4/9
CHECKED BY & DATE: S.KUNISHI '98/4/10
APPROVED BY & DATE: M.FUKUSHIMA '98/4/10
CAD FILENAME: 50802002.S01

TITLE: 2.5 WIRE TO BOARD CONN. CRIMP RECEPTACLE

MOLEX INCORPORATED

MATERIAL NO.: 50802-****
DRAWING NO.: SD-50802-002
SHEET NO.: 1/1
SIZE: B

THIS DRAWING CONTAINS INFORMATION THAT IS PROPRIETARY TO MOLEX INCORPORATED AND SHOULD NOT BE USED WITHOUT WRITTEN PERMISSION.

50802002.S01

EN-02J(097) MXJ-54