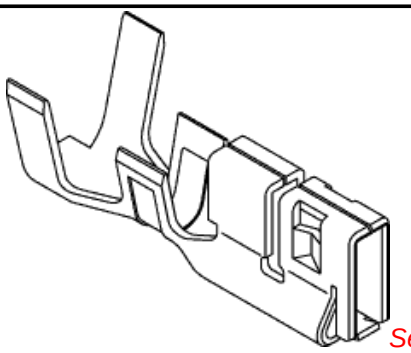
This document was generated on 06/07/2010

PLEASE CHECK WWW.MOLEX.COM FOR LATEST PART INFORMATION

Part Number: 0561349100
Status: Active
Overview: microclasp
Description: 2.00mm (.079") Pitch Crimp Terminal 56134, Female, 22-28 AWG, Bag, Copper Alloy, for 51242/51353/51382/500915 Housings



Series image - Reference only

Documents:

- 3D Model
- Drawing (PDF)
- Product Specification PS-500637-001 (PDF)
- Product Specification PS-500730-001 (PDF)
- Product Specification PS-51242-001 (PDF)
- Product Specification PS-51242-002 (PDF)
- Product Specification PS-51353-003 (PDF)
- Product Specification PS-51382-004 (PDF)
- RoHS Certificate of Compliance (PDF)

General

Product Family	Crimp Terminals
Series	56134
Crimp Quality Equipment	Yes
MolexKits	Yes
Overview	microclasp
Product Name	MicroClasp™

Physical

Gender	Female
Material - Metal	Copper-Nickel-Silicon
Material - Plating Mating	Tin
Material - Plating Termination	Tin
Packaging Type	Bag
Plating min: Mating (µin)	36
Plating min: Mating (µm)	0.90
Plating min: Termination (µin)	36
Plating min: Termination (µm)	0.90
Termination Interface: Style	Crimp or Compression
Wire Insulation Diameter	0.90-1.70mm (.035-.067")
Wire Size AWG	22, 24, 26, 28
Wire Size mm²	N/A

Material Info

Reference - Drawing Numbers

Product Specification	PS-500637-001, PS-500730-001, PS-51242-001, PS-51242-002, PS-51353-003, PS-51382-004, RPS-500637-001, RPS-500730-001, RPS-501844-001, RPS-51216-012, RPS-51242-004, RPS-51242-005, RPS-51353-005, RPS-51353-008, RPS-51353-009, RPS-51353-010, RPS-51353-014, RPS-51353-016, RPS-51353-017, RPS-51353-018, RPS-51353-019, RPS-51353-020, RPS-51353-022, RPS-51353-024, RPS-51353-025, RPS-51353-026, RPS-51353-027, RPS-51353-031, RPS-51382-006, RPS-51382-007, RPS-51382-008, RPS-51382-009, RPS-51382-010, RPS-51382-011, RPS-51382-012, RPS-51382-013, RPS-51382-014, RPS-51382-015
Sales Drawing	SD-56134-005

EU RoHS
ELV and RoHS Compliant
REACH SVHC
Contains SVHC: No
Halogen-Free Status
Halogen-Free

China RoHS

Need more information on product environmental compliance?

Email productcompliance@molex.com
For a multiple part number RoHS Certificate of Compliance, click here

Please visit the Contact Us section for any non-product compliance questions.

Search Parts in this Series
56134Series

Use With
500915 Dual Row Crimp Housing, 51242 Dual Row Crimp Housing, 51353 Dual Row Crimp Housing, 51382 Single Row Crimp Housing

Application Tooling | **FAQ**

Tooling specifications and manuals are found by selecting the products below. Crimp Height Specifications are then contained in the Application Tooling Specification document.

Global

Description	Product #
HAND CRIMP TOOL	0638116300
Extraction Tool	0638132700

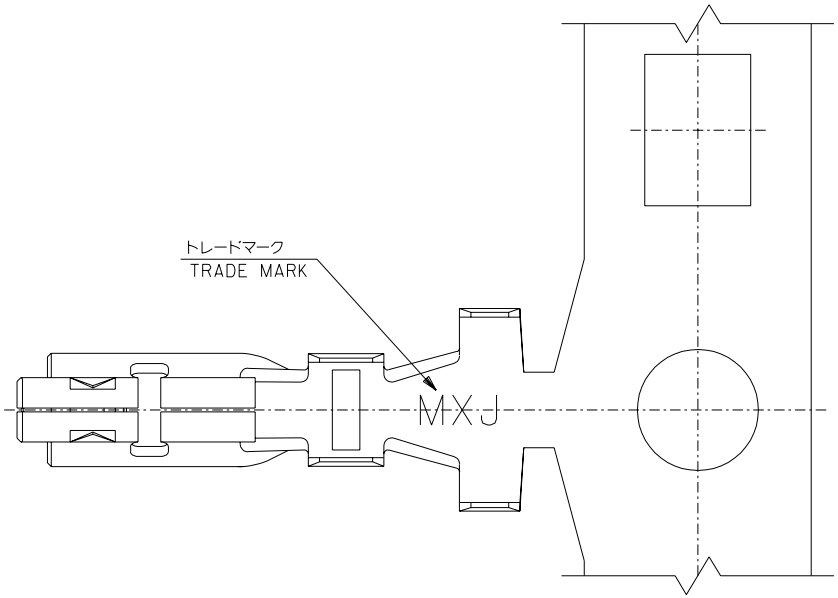
Japan

Description	Product #
Hand Crimp Tool	0574045300

This document was generated on 06/07/2010

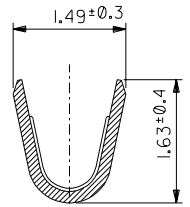
PLEASE CHECK WWW.MOLEX.COM FOR LATEST PART INFORMATION

DWG. NO. SD-56134-005

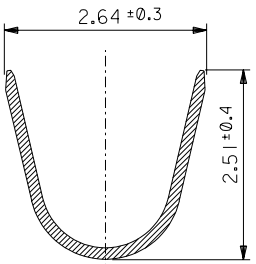


注記
NOTES

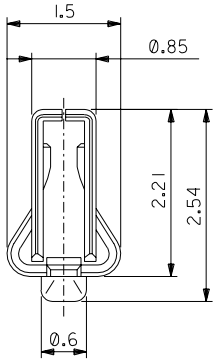
1. 使用材料 ： 銅合金，錫メッキ（t＝0．15）
MATERIAL : PRE-TINNED COPPER ALLOY
2. 適合ハウジング ： 51242、51382、51353シリーズ
APPLICABLE HOUSING : 51242, 51382, 51353 SERIES

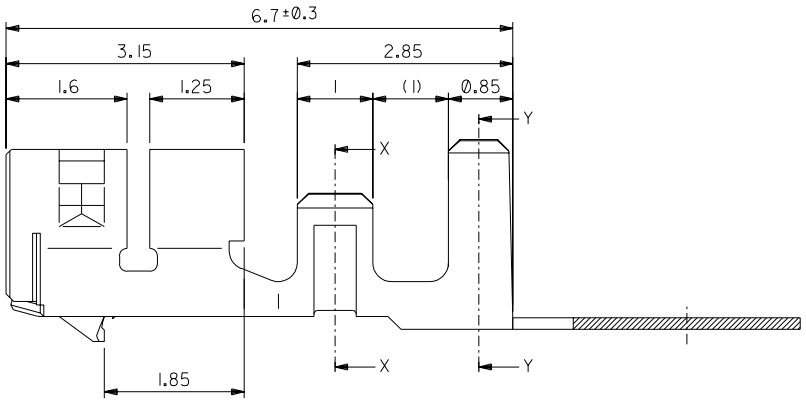


SECT. X-X



SECT. Y-Y





無 鉛
LEAD FREE

56134-9100	バラ状 LOOSE
56134-9000	連鎖状 CHAIN
MATERIAL NO.	端子形状 FORM

REV	DESCRIPTION	DATE	BY
B	REVISED ±B3NO. J2003-3127	'03/06/12	DRWN: N.ITO CH'K: K.ASAKAWA APPR: T.YAMAGUCHI
A	REVISED ±B1NO. J2002-2307	'02/03/18	DRWN: N.ITO CH'K: K.ASAKAWA APPR: T.YAMAGUCHI
0	RELEASED ±B0NO. J2002-1826	'02/02/28	DRWN: N.ITO CH'K: K.ASAKAWA APPR: T.YAMAGUCHI

DO NOT SCALE DRAWING

MATERIAL 材料: 注記参照 SEE NOTES

FINISH 仕上げ: //

WIRE RANGE 適用電線範囲: 0.086～ 0.4 mm²

INS. RANGE 被覆外径: Ø0.9 ～Ø1.7 mm

GENERAL TOLERANCES: (UNLESS SPECIFIED) 一般公差	
10 UNDER 未満	±0.2
10 OVER 以上 30 UNDER 未満	±0.25
30 OVER 以上	±0.3
ANGLE 角度	±3°

56134-9*00	MODEL NO.
SCALE 15:1	DESIGN UNITS ☒mm ☐INCH
±B2THIRD ANGLE PROJECTION	DIMENSIONS: ☐mm/INCH ☐INCH/mm ☒mm ONLY
SHT ±B2REVISE ON CAD ONLY	REV
DRAWN BY & DATE N.ITO '02/02/28	TITLE: 2.0mm W-to-B CONN CRIMP RECEPTACLE
CHECKED BY & DATE K.ASAKAWA '03/06/12	
APPROVED BY & DATE T.YAMAGUCHI '03/06/12	MOLEX INCORPORATED
CAD FILENAME 56134005.S01	MATERIAL NO. SEE CHART
DRAWING NO. SD-56134-005	SHEET NO. 1 OF 1

±B8THIS DRAWING CONTAINS INFORMATION THAT IS PROPRIETARY TO MOLEX INCORPORATED AND SHOULD NOT BE USED WITHOUT WRITTEN PERMISSION.

SIZE B

56134005.S01

EN-02J(097) MXJ-54