2D Drawing	IGES	STEP	3D PDF
Solder Profile	CofC RoHS Compliant	CofC REACH Compliant	UL Plastic File
Certificate of Origin	Check Stock	Request a Sample	Send Us An Email

D-SUBMINIATURE CONNECTORS:

K85X Series

Vertical PCB Mount and Solder Cup

K85X Series Dimensions

Dimensions in mm

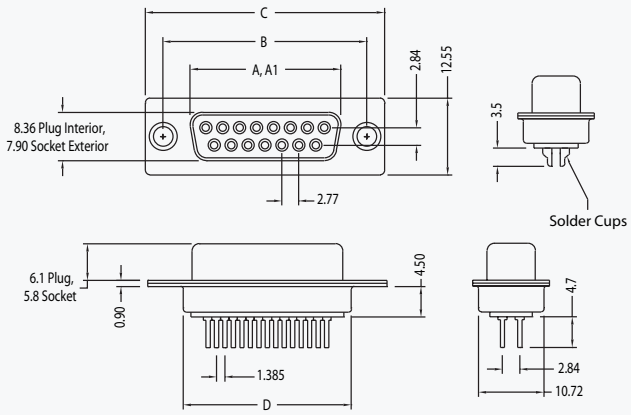

Number of Contacts (Shell Size)	Dimensions (Inch/mm)				
	A	A1	B	C	D
9 (E)	.643 16.33	.666 16.92	.984 24.99	1.213 30.81	.755 19.18
15 (A)	.971 24.66	.994 25.25	1.312 33.32	1.541 39.14	1.083 27.51
25 (B)	1.511 38.38	1.534 38.96	1.852 47.04	2.088 53.04	1.614 41.00
37 (C)	2.159 54.84	2.182 55.42	2.500 63.50	2.729 69.32	2.272 57.30

A = Exterior of Female Shell (S)
A1 = Interior of Male Shell (P)

Generated Part Number

K85X-ED-9P

Part Number Builder

K85X	–	E	D	9	P		
Series		Shell Type	Pin Type	Contact Option	Contact Type	Mounting Option	Plating Option

Series
K85X - D-Subminiature Vertical Connector

Contact Shell Size
E - 9 Contacts
A - 15 Contacts
B - 25 Contacts
C - 37 Contacts

Contact Construction, Pin Type
A - Precision Formed, Solder Cup (Not Available with BR/BRJ)
D - Precision Formed, Vertical Pin (PCB Mount)

Contact Type
P - Pin Contact (Plug)
S - Socket Contact (Receptacle)

Mounting Option
Blank - Through Hole
BR - With #4-40 Threaded Boardlocks
BRJ - #4-40 Threaded Boardlocks and #4-40 Jackscrews Installed
K - #4-40 Threaded Bushings
KJ - #4-40 Threaded Bushings and #4-40 Jackscrews Installed
R - Round Jackscrews

Plating Option
Blank - Gold Flash
30 - 30μ" Gold

Contact Kycon for Other Options