M8 / M12 CONNECTOR SYSTEM

EVERY CONNECTION COUNTS

TE CONNECTIVITY'S M8 / M12

Connector System for machine industrial automation and control applications provides a solution that safely and reliably ensures the communication in industrial environments. This connector system also finds applications outside of its traditional industries where a compact reliable connection system with environmental protection is required. TE's solution includes an extensive connector range of PCB headers, cable assemblies and I/O boxes, and provides users with an interface that supports higher bandwidth needs – meeting the requirements of up to 10Gb/s.
TE's broad product portfolio provides customers with shielded and unshielded cable assembly options in both Cat5e and Cat6A cable types. For rewiring on site a range of field serviceable connectors are provided, allowing versatile systems to be quickly and easily established. Additional styles are available on request including alternative mounting arrangements for panel mount connectors and double ended cable assemblies.

TE'S INDUSTRIAL ETHERNET PRODUCTS PLAY A VITAL ROLE IN FACTORY AUTOMATION.

TE's industrial Ethernet products are widespread throughout today's networked factories, and play a critical role in driving the efficiency of many manufacturing processes. Used extensively in material handling equipment, our industrial communications solutions are also found throughout the automotive and food and beverage industries, as well as in the many manufacturing applications of industrial robots. With the development of smaller industrial Ethernet products, TE's solutions are also ideal for vision systems, common in security equipment and mail sortation devices.

CONTENTS

CONNECTORS 4
- M8 Field Installable 5
- M12 Straight Field Installable 6-7
- M12 Angled Field Installable 8-9
- M12 Panel Mount 10
- M12 Panel Solder PCB Mount 11
- M12 X-Coded Field Installable 12
- Connector Notes 13

CABLE ASSEMBLIES 14
- M8 Series Male 15
- M8 Series Female 16
- M12 Series Male Straight 17
- M12 Series Female Straight 18
- M12 Series Male Angled 19
- M12 Series Female Angled 20
- M12 Series Male to Female Y-cables 21
- M8 Male to M12 Female Series 21
- M8 Female to M12 Male Series 21
- M12 Male to M12 Female Series 22
- M8 Female to M8 Male Series LED 23
- M12 Female to M12 Male Series LED 23
- Cable Assembly Notes 24

I/O MODULES 25
- M8 – With Cable 26
- M8 – With M12 Plug Connection 27
- M8 – For Homerun Connection 27
- M12 – With Cable 28
- M12 – With M12/M23 Plug Connection 28
- M12 – No Cable/With Cable Gland 29
- I/O Module Notes 30

- Online Configurator 31

M8/M12 CONNECTORS

TE's M8/M12 connectors continues to fill the ongoing needs for sensor connection in Industrial Machinery and Factory Automation. A connection standard for many years, these products also find applications outside of their traditional industries where a compact reliable connection system with environmental protection is required. TE's M8/M12 connector portfolio includes A, B, D, S, T, and X-coded (up to 10 Gigabit) versions to serve various customer needs.
The connectors are also available in shielded and unshielded versions, to support Gigabyte Ethernet applications.

M8/M12 – THE CODINGS

A-coding:	Actuator-sensor plug connections for DeviceNet, IO link and Profibus
B-coding:	Fieldbus connections for Profibus and Interbus
D-coding:	Industrial Ethernet, Profinet, Ethernet/IP and EtherCat
S-coding:	Motor, Frequency-convertors, motor operated switches, PSUs for Power, 620 V, 12 A
T-coding:	Fieldbus comp, passive distribution boxes, motors, PSUs for Power, 63 V, 12 A
X-coding:	Cat6A, high-speed 10Gbit rugged industrial Ethernet applications IEC 61076-2-109

Ambient temperature for M8:
-40 °C to 85 °C
Ambient temperature for M12:
-40 °C to 85 °C
Current rating:
4 and 5 pins: 4 A per pin
8 and 12 pins: 2 A per pin
IP rating: IP67/IP68

As specifications vary for different parts, please refer to your TE contact for detailed information.

Application Specifications for M8 M12 Connectors and Cable Assemblies:
114-32127
Product Specifications:
Connectors: 108-106140
X-coded: 108-137008

Size	Pins	Rated	Maximum Current per pin	Polution grade
M8	3	60 V	4 A	3
M8	4	30 V	4 A	3
M12	3	250 V	4 A	3
M12	4	250 V	4 A	3
M12	5	125 V	4 A	3
M12	8	60 V	2 A	3
M12	12	30 V	2 A	3

M8 Field Installable

Male Series

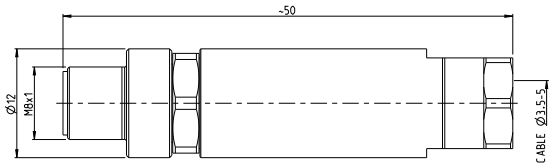

Female Series

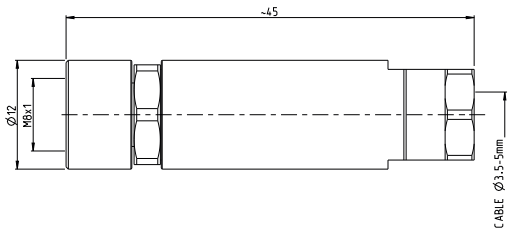

All dimensions in mm.

		TE Part Number
M8 Male Screw Connection, Straight		
3-Pole	PG7	2120954-1
4-Pole	PG7	1-2120954-1

M8 Male Right Angle		
3-Pole	PG7	2120955-1
4-Pole	PG7	1-2120955-1

M8 Male Panel, Solder, Front Mounting, M8 Fastening Thread		
3-Pole	M8	2120958-1
4-Pole	M8	1-2120958-1

		TE Part Number
M8 Female Screw Connection, Straight		
3-Pole	PG7	2120956-1
4-Pole	PG7	1-2120956-1

M8 Male Right Angle		
3-Pole	PG7	2120957-1
4-Pole	PG7	1-2120957-1

M8 Male Panel, Solder, Front Mounting, M8 Fastening Thread		
3-Pole	M8	2120959-1
4-Pole	M8	1-2120959-1

M12 Straight Field Installable

Male Series

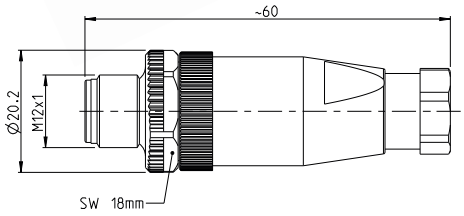

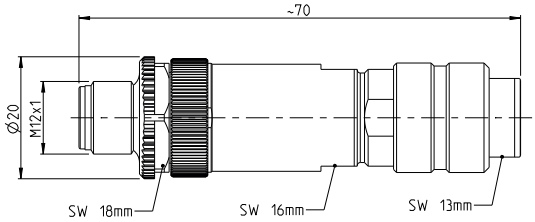

All dimensions in mm.

		TE Part Number
A coding – M12 Male Screw Connection, Straight		
3-Pole	PG7	2-2271110-1
	PG9	2-2271110-2
4-Pole	PG7	3-2271110-1
	PG9	3-2271110-2
5-Pole	PG7	4-2271110-1
	PG9	4-2271110-2
8-Pole	PG9	5-2271110-2
12-Pole	PG9	6-2271110-2

B coding – M12 Male Screw Connection, Straight		
4-Pole	PG7	3-2271112-1
	PG9	3-2271112-2
5-Pole	PG7	4-2271112-1
	PG9	4-2271112-2

		TE Part Number
A coding – M12 Male Screw Connection, Straight, Shielded		
4-Pole	PG7	3-2271111-2
5-Pole	PG7	4-2271111-2
8-Pole	PG7	5-2271111-2
12-Pole	PG9	6-2271111-2

B coding – M12 Male Screw Connection, Straight, Shielded		
4-Pole	PG7	3-2271113-2
5-Pole	PG7	4-2271113-2

D coding – M12 Male Screw Connection, Straight, Shielded		
4-Pole	PG7	3-2271115-2

S coding – M12 Male Screw Connection, Straight, Shielded		
3-Pole	plus PE	2120951-1

T coding – M12 Male Screw Connection, Straight, Shielded		
4-Pole		2120949-1

Female Series

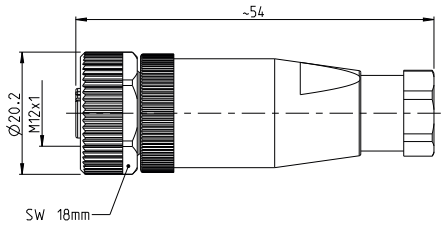

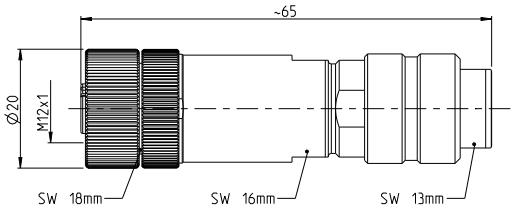

All dimensions in mm.

		TE Part Number
A coding – M12 Female Screw Connection, Straight		
3-Pole	PG7	2-2271116-1
	PG9	2-2271116-2
4-Pole	PG7	3-2271116-1
	PG9	3-2271116-2
5-Pole	PG7	4-2271116-1
	PG9	4-2271116-2
8-Pole	PG9	5-2271116-2
12-Pole	PG9	6-2271116-2

B coding – M12 Female Screw Connection, Straight		
4-Pole	PG7	3-2271118-1
	PG9	3-2271118-2
5-Pole	PG7	4-2271118-1
	PG9	4-2271118-2

		TE Part Number
A coding – M12 Female Screw Connection, Straight, Shielded		
4-Pole	PG9	3-2271117-2
5-Pole	PG9	4-2271117-2
8-Pole	PG9	5-2271117-2
12-Pole	PG9	6-2271117-2

B coding – M12 Female Screw Connection, Straight, Shielded		
4-Pole	PG7	3-2271119-2
5-Pole	PG7	4-2271119-2

D coding – M12 Female Screw Connection, Straight, Shielded		
4-Pole	PG7	3-2271121-2

S coding – M12 Female Screw Connection, Straight, Shielded		
3-Pole	plus PE	2120950-1

T coding – M12 Female, Screw Connection, Straight, Shielded		
4-Pole		2120948-1

M12 Angled Field Installable

Male Series

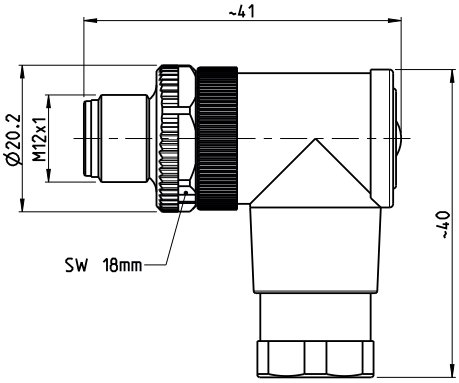

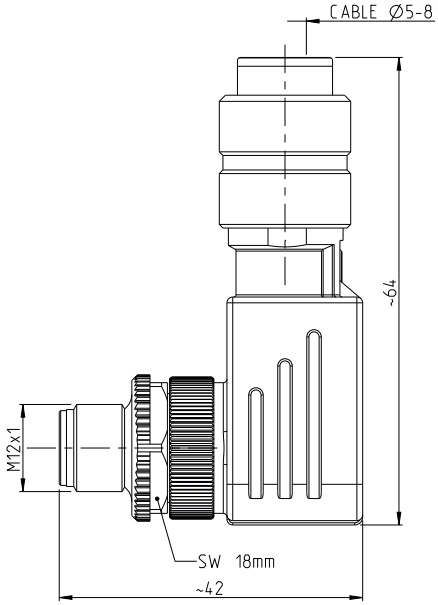

All dimensions in mm.

		TE Part Number
A coding – M12 Male Screw Connection, Angled		
3-Pole	PG7	2-2271122-1
	PG9	2-2271122-2
4-Pole	PG7	3-2271122-1
	PG9	3-2271122-2
5-Pole	PG7	4-2271122-1
	PG9	4-2271122-2
8-Pole	PG9	5-2271122-2
12-Pole	PG9	6-2271122-2

B coding – M12 Male Screw Connection, Angled		
4-Pole	PG7	3-2271124-1
	PG9	3-2271124-2
5-Pole	PG7	4-2271124-1
	PG9	4-2271124-2

		TE Part Number
A coding – M12 Male Screw Connection, Angled, Shielded		
4-Pole	PG7	3-2271123-2
5-Pole	PG7	4-2271123-2
8-Pole	PG7	5-2271123-2
12-Pole	PG9	6-2271123-2

B coding – M12 Male Screw Connection, Angled, Shielded		
4-Pole	PG7	3-2271125-2
5-Pole	PG7	4-2271125-2

D coding – M12 Male Screw Connection, Angled, Shielded		
4-Pole	PG7	3-2271127-2
	PG9	3-2271133-2

Female Series

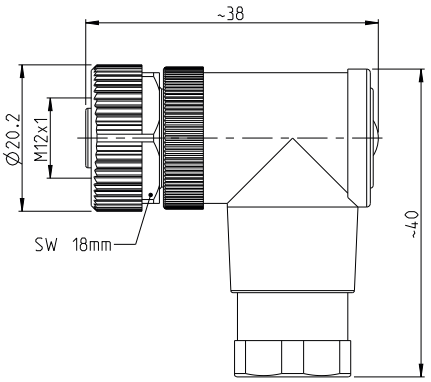

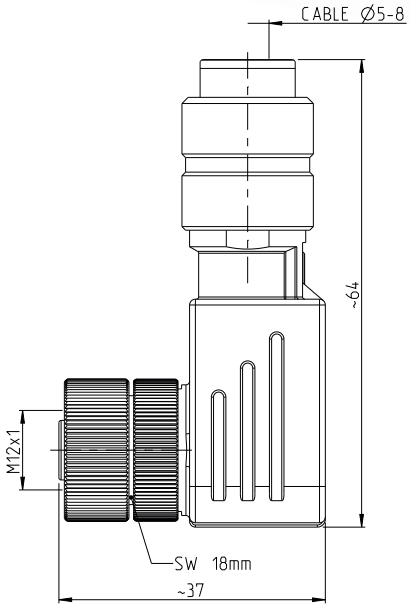

All dimensions in mm.

		TE Part Number
A coding – M12 Female Screw Connection, Angled		
3-Pole	PG7	2-2271128-1
	PG9	2-2271128-2
4-Pole	PG7	3-2271128-1
	PG9	3-2271128-2
5-Pole	PG7	4-2271128-1
	PG9	4-2271128-2
8-Pole	PG9	5-2271128-2
12-Pole	PG9	6-2271128-2

B coding – M12 Female Screw Connection, Angled		
4-Pole	PG7	3-2271130-1
	PG9	3-2271130-2
5-Pole	PG7	4-2271130-1
	PG9	4-2271130-2

		TE Part Number
A coding – M12 Female Screw Connection, Angled, Shielded		
4-Pole	PG7	3-2271129-2
5-Pole	PG7	4-2271129-2
8-Pole	PG7	5-2271129-2
12-Pole	PG9	6-2271129-2

B coding – M12 Female Screw Connection, Angled, Shielded		
4-Pole	PG9	3-2271131-2
5-Pole	PG9	4-2271131-2

D coding – M12 Female Screw Connection, Angled, Shielded		
4-Pole	PG7	3-2271133-2

M12 Panel Mount

Male Series

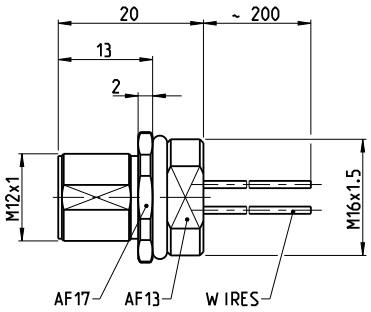

Female Series

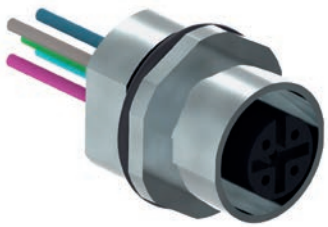

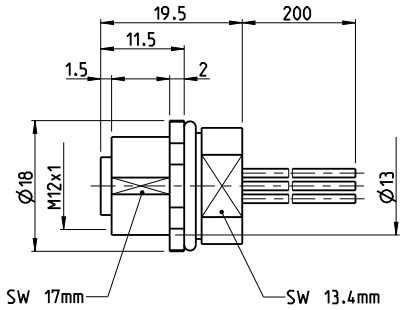

All dimensions in mm.

		TE Part Number
A coding **M12 Male, Front Mounting M16 x 1.5 with wires 0.25 200 mm**		
4-Pole		3-2271134-2
5-Pole		4-2271134-2
8-Pole		5-2271134-2
12-Pole		6-2271134-2

B coding **M12 Male, Front Mounting M16 x 1.5 with wires 0.25 200 mm**		
4-Pole		3-2271135-2
5-Pole		4-2271135-2

D coding **M12 Male, Front Mounting M16 x 1.5 with wires 0.25 200 mm**		
4-Pole	PG9	3-2271136-2

T coding **M12 Male, Front Mounting M20 x 1.5**		
4-Pole		2120947-1

		TE Part Number
A coding **M12 Female, Front Mounting M16 x 1.5 with wires 0.25 200 mm**		
4-Pole		3-2271137-2
5-Pole		4-2271137-2
8-Pole		5-2271137-2
12-Pole		6-2271137-2

B coding **M12 Female, Front Mounting M16 x 1.5 with wires 0.25 200 mm**		
4-Pole		3-2271138-2
5-Pole		4-2271138-2

D coding **M12 Female, Front Mounting M16 x 1.5 with wires 0.25 200 mm**		
4-Pole		3-2271139-2

T coding **M12 Female, Front Mounting M20 x 1.5**		
4-Pole		2120946-1

M12 Panel Solder PCB Mount

Male Series

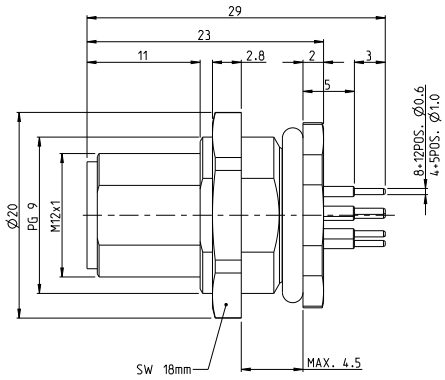

Female Series

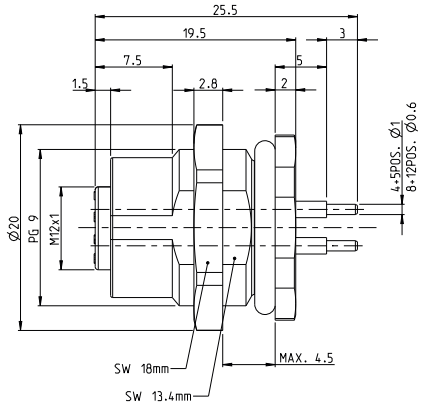

All dimensions in mm.

		TE Part Number
A coding **M12 Male, Rear Mounting M16 x 1.5, straight**		
4-Pole	PG9	3-2271140-2
5-Pole	PG9	4-2271140-2
8-Pole	PG9	5-2271140-2
12-Pole	PG9	6-2271140-2

B coding **M12 Male, Rear Mounting M16 x 1.5, straight**		
4-Pole	PG9	3-2271141-2
5-Pole	PG9	4-2271141-2

D coding **M12 Male, Rear Mounting M16 x 1.5, straight**		
4-Pole	PG9	3-2271142-2

		TE Part Number
A coding **M12 Female, Rear Mounting M16 x 1.5, straight**		
4-Pole	PG9	3-2271143-2
5-Pole	PG9	4-2271143-2
8-Pole	PG9	5-2271143-2
12-Pole	PG9	6-2271143-2

B coding **M12 Female, Rear Mounting M16 x 1.5, straight**		
4-Pole	PG9	3-2271144-2
5-Pole	PG9	4-2271144-2

D coding **M12 Female, Rear Mounting M16 x 1.5, straight**		
4-Pole	PG9	3-2271145-2

M12 X-Coded Field Installable

M12 X-Coded PCB Connector

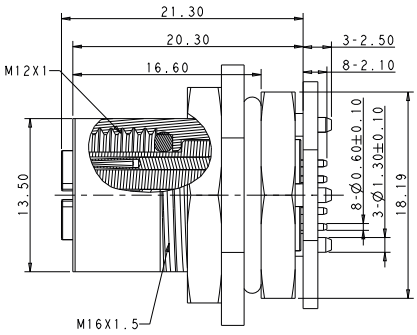

M12 Pin Connector Cable Assembly

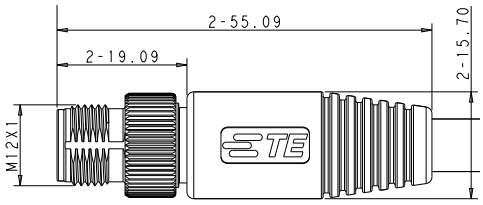

All dimensions in mm.

Description	TE Part Number
M12 X-Coded PCB Connector	
Female Panel Mount Solder PCB Connector	2232331-1
Female Panel Mount Solder Wire	2271195-1
Male Connector installable (IDC): 5.5 - 9 mm cable diameter	2120952-1

Length	TE Part Number
M12 Pin Connector Cable Assembly	
1 m	2241021-1
2 m	2241021-2
3 m	2241021-3
4 m	2241021-4
5 m	2241021-5
10 m	2241021-6

Connector Notes

M8/M12 CABLE ASSEMBLIES

TE's M8/M12 cable assemblies are available as single-ended or double-ended and as straight or angled versions. Various cable types, colors and lengths offer a flexible design that can be used in combination with TE's male/female connectors and I/O Modules.

Standard (IEC):
IEC 61076-2-104 for all M8 series and
IEC 61076-2-101 for all M12 series

Operating temperature:
Connectors: -25°C to +85°C
Cables:
- PVC: -5°C to + 80°C Flexible
  -30°C to + 80°C Fixed
- PUR: -25°C to + 80°C (90°C max. 10.000h) Flexible
  -40°C to + 80°C (90°C max. 10.000h) Fixed

Connector Contacts:
Current rating per contact is 4 A

Shielding: Yes/No
Refer to drawing

Suitable Cable Diameter:
Refer to drawing

IP Rating:
IP65/67

Application Areas:
PUR: For use in less demanding environments with required oil, chemical and lubricant resistance
PUR/PVC: For use assembly and production lines requiring higher cut, abrasion and chemical resistance
PVC: For use in demanding environments with required resistance to oils, cehmicals and abrasion.

M8 Cable Assemblies

M8 Series Male

TE Part Number	Description	Available In
2273000	M8 x 1.0 Straight plug Pigtail	3 positions PUR or PVC, Lengths: 1.5 m / 3.0 m / 5.0 m / 10.0 m
2273002	M8 x 1.0 Straight plug Pigtail	4 positions PUR or PVC, Lengths: 1.5 m / 3.0 m / 5.0 m / 10.0 m

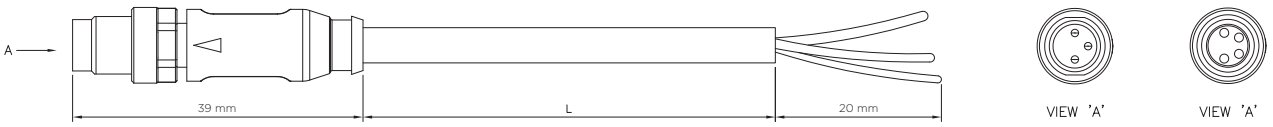

TE Part Number	Description	Available In
2273004	M8 x 1.0 Straight plug Pigtail Shielded	3 positions PUR or PVC, Lengths: 1.5 m / 3.0 m / 5.0 m / 10.0 m
2273006	M8 x 1.0 Straight plug Pigtail	4 positions PUR or PVC, Lengths: 1.5 m / 3.0 m / 5.0 m / 10.0 m

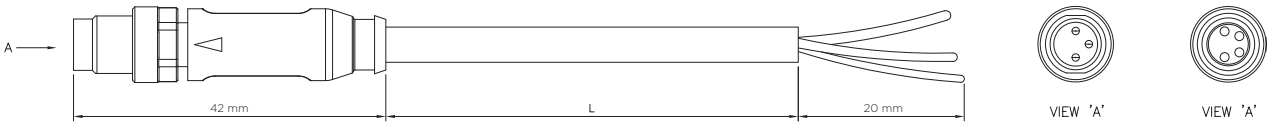

TE Part Number	Description	Available In
2273008	M8 x 1.0 Angled plug Pigtail	3 positions PUR or PVC, Lengths: 1.5 m / 3.0 m / 5.0 m / 10.0 m
2273010	M8 x 1.0 Angled plug Pigtail	4 positions PUR or PVC, Lengths: 1.5 m / 3.0 m / 5.0 m / 10.0 m

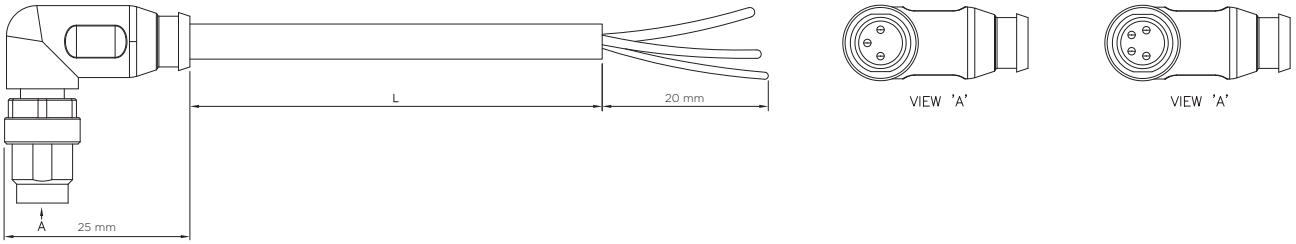

TE Part Number	Description	Available In
2273014	M8 Male Panel Mount Rear	3 positions Panel Mount, Lengths: 0.2 m
2273230	M8 Male Panel Mount Rear	4 positions Panel Mount, Length: 0.2 m

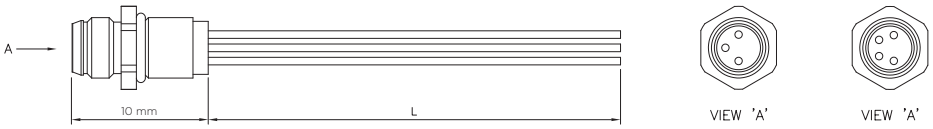

M8 Cable Assemblies

M8 Series Female

TE Part Number	Description	Available In
2273001	M8 x 1.0 Straight socket Pigtail	3 and 4 positions PUR or PVC, Lengths: 1.5 m / 3.0 m / 5.0 m / 10.0 m

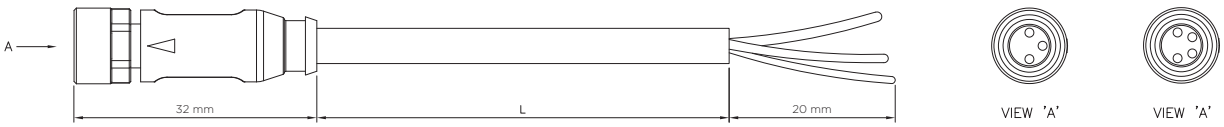

TE Part Number	Description	Available In
2273005	M8 x 1.0 Straight socket Pigtail Shielded	3 and 4 positions PUR or PVC, Lengths: 1.5 m / 3.0 m / 5.0 m / 10.0 m

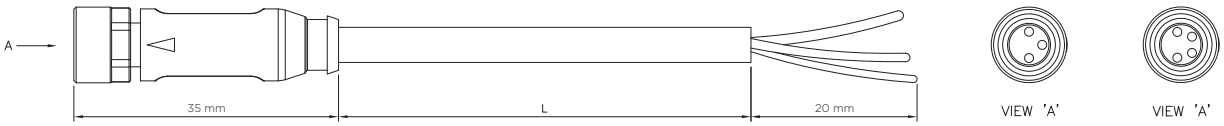

TE Part Number	Description	Available In
2273009	M8 x 1.0 Angled socket Pigtail	3 and 4 positions PUR or PVC, Lengths: 1.5 m / 3.0 m / 5.0 m / 10.0 m

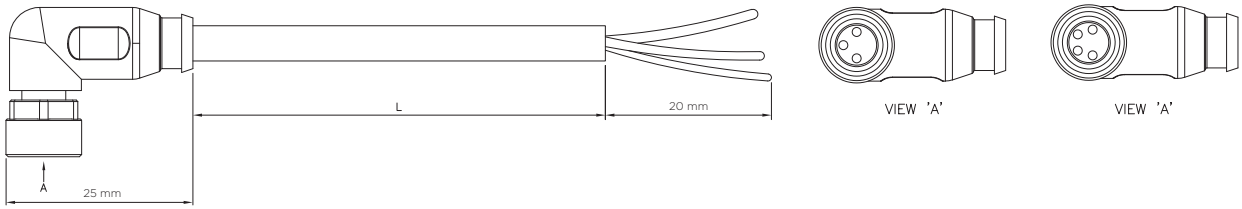

TE Part Number	Description	Available In
2273012	M8 x 1.0 Angled socket Pigtail LED	4 positions PUR or PVC, Lengths: 1.5 m / 3.0 m / 5.0 m / 10.0 m

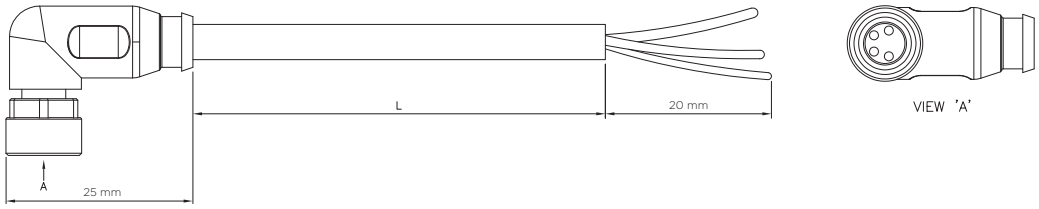

TE Part Number	Description	Available In
2273013	M8 Female Panel Mount Rear	3 positions Panel Mount, Length: 0.2 m
2273015	M8 Female Panel Mount Rear	4 positions Panel Mount, Length: 0.2 m

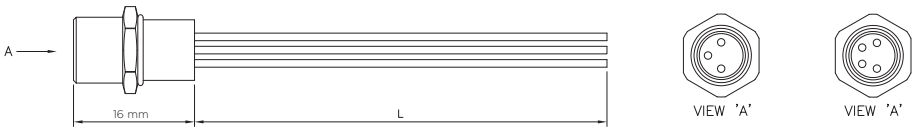

M12 Cable Assemblies

M12 Series Male Straight

TE Part Number	Description	Available In
2273022	M12 x 1.0 Straight plug Pigtail Unshielded	3 positions PUR or PVC, Lengths: 1.5 m / 3.0 m / 5.0 m / 10.0 m
2273028	M12 x 1.0 Straight plug Pigtail Unshielded	4 positions PUR or PVC, Lengths: 1.5 m / 3.0 m / 5.0 m / 10.0 m
2273034	M12 x 1.0 Straight plug Pigtail Unshielded	5 positions PUR or PVC, Lengths: 1.5 m / 3.0 m / 5.0 m / 10.0 m
2273040	M12 x 1.0 Straight plug Pigtail Unshielded	8 positions PUR, Lengths: 1.5 m / 3.0 m / 5.0 m / 10.0 m

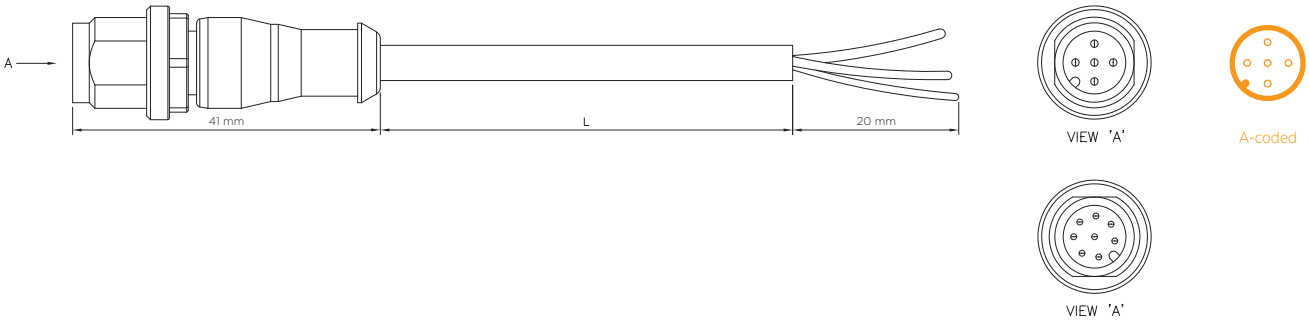

TE Part Number	Description	Available In
2273042	M12 x 1.0 Straight plug Pigtail Shielded	3 positions PUR or PVC, Lengths: 1.5 m / 3.0 m / 5.0 m / 10.0 m
2273044	M12 x 1.0 Straight plug Pigtail Shielded	4 positions PUR or PVC, Lengths: 1.5 m / 3.0 m / 5.0 m / 10.0 m
2273046	M12 x 1.0 Straight plug Pigtail Shielded	5 positions PUR or PVC, Lengths: 1.5 m / 3.0 m / 5.0 m / 10.0 m
2273048	M12 x 1.0 Straight plug Pigtail Shielded	8 positions PUR, Lengths: 1.5 m / 3.0 m / 5.0 m / 10.0 m

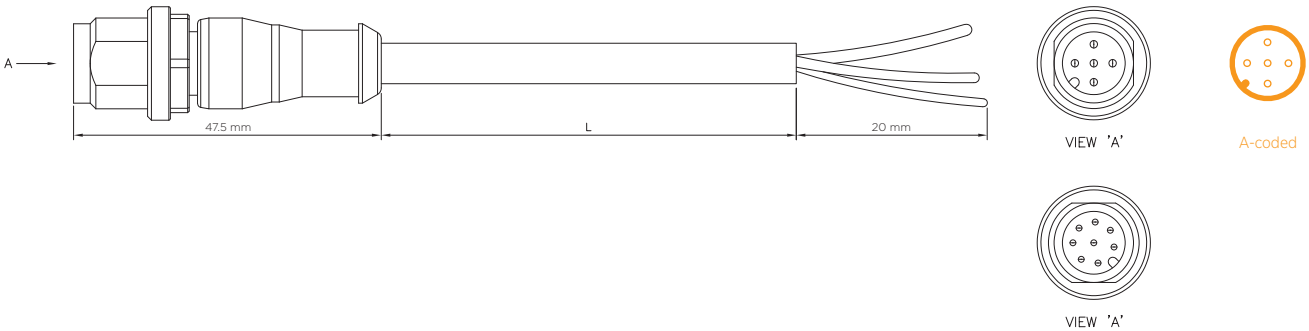

TE Part Number	Description	Available In
2273051	M12 Male Panel Mount Rear	4 positions PVC, Lengths: 0.2 m
2273052	M12 Male Panel Mount Rear	5 positions PVC, Length: 0.2 m

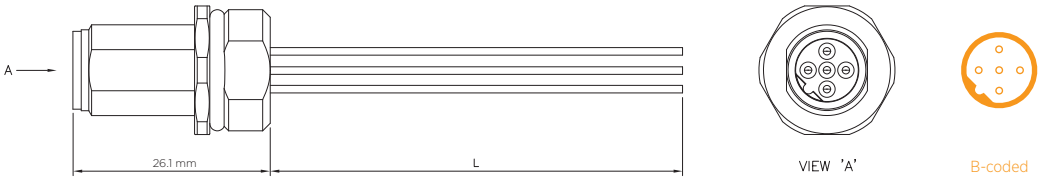

M12 Cable Assemblies

M12 Series Female Straight

TE Part Number	Description	Available In
2273023	M12 x 1.0 Straight socket Pigtail Unshielded	3 positions PUR or PVC, Lengths: 1.5 m / 3.0 m / 5.0 m / 10.0 m
2273029	M12 x 1.0 Straight socket Pigtail Unshielded	4 positions PUR or PVC, Lengths: 1.5 m / 3.0 m / 5.0 m / 10.0 m
2273035	M12 x 1.0 Straight socket Pigtail Unshielded	5 positions PUR or PVC, Lengths: 1.5 m / 3.0 m / 5.0 m / 10.0 m
2273041	M12 x 1.0 Straight socket Pigtail Unshielded	8 positions PUR, Lengths: 1.5 m / 3.0 m / 5.0 m / 10.0 m

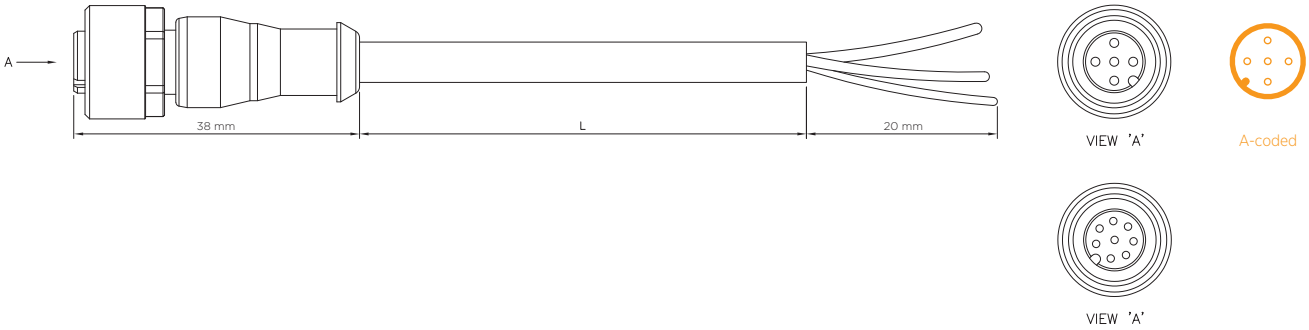

TE Part Number	Description	Available In
2273043	M12 x 1.0 Straight socket Pigtail Shielded	3 positions PUR or PVC, Lengths: 1.5 m / 3.0 m / 5.0 m / 10.0 m
2273045	M12 x 1.0 Straight socket Pigtail Shielded	4 positions PUR or PVC, Lengths: 1.5 m / 3.0 m / 5.0 m / 10.0 m
2273047	M12 x 1.0 Straight socket Pigtail Shielded	5 positions PUR or PVC, Lengths: 1.5 m / 3.0 m / 5.0 m / 10.0 m
2273049	M12 x 1.0 Straight socket Pigtail Shielded	8 positions PUR, Lengths: 1.5 m / 3.0 m / 5.0 m / 10.0 m

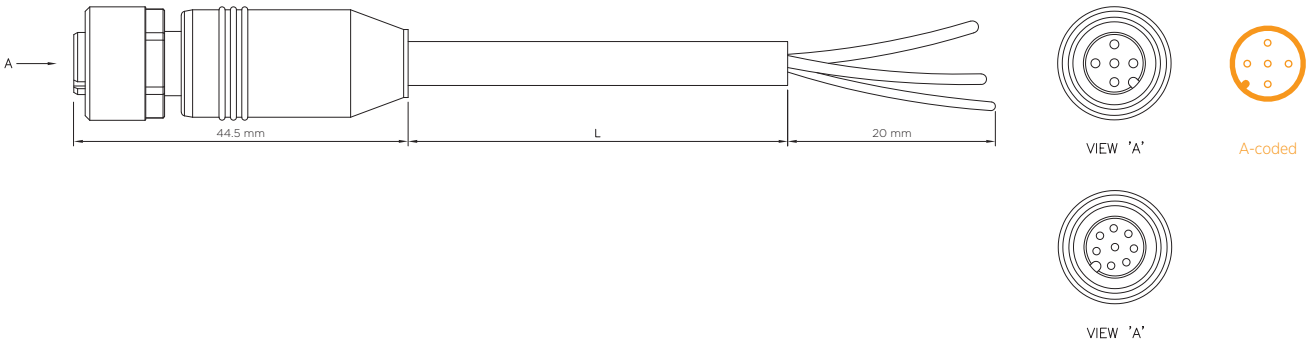

TE Part Number	Description	Available In
2273054	M12 Female Panel Mount Rear	4 positions PUR, Length: 0.2 m
2273055	M12 Female Panel Mount Rear	5 positions PUR, Length: 0.2 m

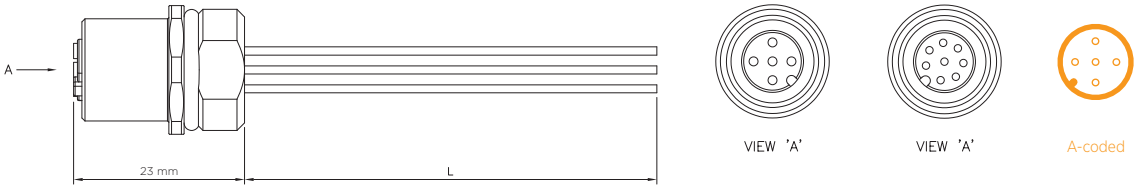

M12 Series Male Angled

TE Part Number	Description	Available In
2273076	M12 x 1.0 Angled plug Pigtail Unshielded	3 positions PUR or PVC, Lengths: 1.5 m / 3.0 m / 5.0 m / 10.0 m
2273082	M12 x 1.0 Angled plug Pigtail Unshielded	4 positions PUR or PVC, Lengths: 1.5 m / 3.0 m / 5.0 m / 10.0 m
2273088	M12 x 1.0 Angled plug Pigtail Unshielded	5 positions PUR or PVC, Lengths: 1.5 m / 3.0 m / 5.0 m / 10.0 m
2273094	M12 x 1.0 Angled plug Pigtail Unshielded	8 positions PUR, Lengths: 1.5 m / 3.0 m / 5.0 m / 10.0 m

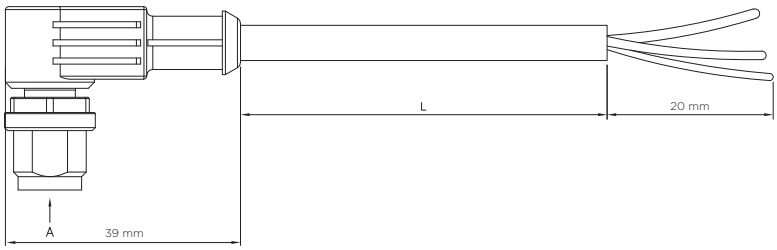

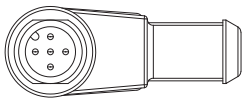

VIEW 'A'

A-coded

TE Part Number	Description	Available In
2273096	M12 x 1.0 Angled plug Pigtail Shielded	3 positions PUR or PVC, Lengths: 1.5 m / 3.0 m / 5.0 m / 10.0 m
2273098	M12 x 1.0 Angled plug Pigtail Shielded	4 positions PUR or PVC, Lengths: 1.5 m / 3.0 m / 5.0 m / 10.0 m
2273100	M12 x 1.0 Angled plug Pigtail Shielded	5 positions PUR or PVC, Lengths: 1.5 m / 3.0 m / 5.0 m / 10.0 m
2273102	M12 x 1.0 Angled plug Pigtail Shielded	8 positions PUR, Lengths: 1.5 m / 3.0 m / 5.0 m / 10.0 m

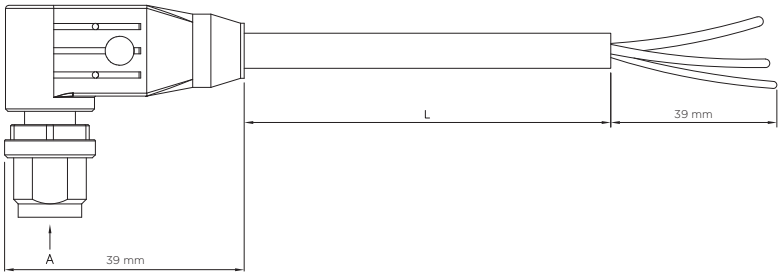

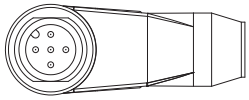

VIEW 'A'

A-coded

M12 Cable Assemblies

M12 Series Female Angled

TE Part Number	Description	Available In
2273077	M12 x 1.0 Angled socket Pigtail Unshielded	3 positions PUR or PVC, Lengths: 1.5 m / 3.0 m / 5.0 m / 10.0 m
2273083	M12 x 1.0 Angled socket Pigtail Unshielded	4 positions PUR or PVC, Lengths: 1.5 m / 3.0 m / 5.0 m / 10.0 m
2273089	M12 x 1.0 Angled socket Pigtail Unshielded	5 positions PUR or PVC, Lengths: 1.5 m / 3.0 m / 5.0 m / 10.0 m
2273095	M12 x 1.0 Angled socket Pigtail Unshielded	8 positions PUR, Lengths: 1.5 m / 3.0 m / 5.0 m / 10.0 m

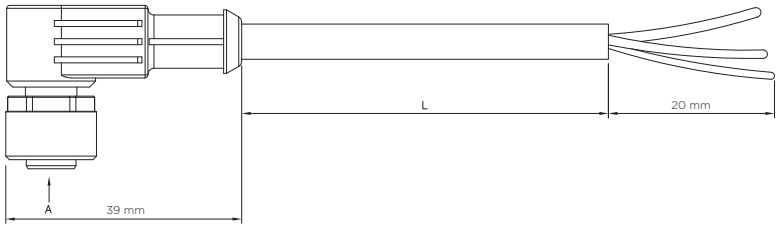

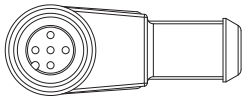

A-coded

TE Part Number	Description	Available In
2273097	M12 x 1.0 Straight socket Pigtail Shielded	3 positions PUR or PVC, Lengths: 1.5 m / 3.0 m / 5.0 m / 10.0 m
2273099	M12 x 1.0 Straight socket Pigtail Shielded	4 positions PUR or PVC, Lengths: 1.5 m / 3.0 m / 5.0 m / 10.0 m
2273101	M12 x 1.0 Straight socket Pigtail Shielded	5 positions PUR or PVC, Lengths: 1.5 m / 3.0 m / 5.0 m / 10.0 m
2273103	M12 x 1.0 Straight socket Pigtail Shielded	8 positions PUR, Lengths: 1.5 m / 3.0 m / 5.0 m / 10.0 m

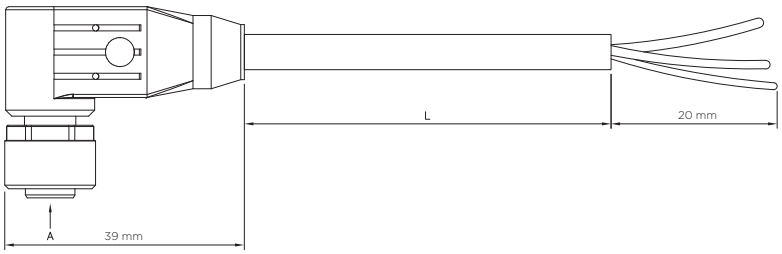

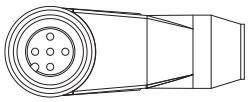

A-coded

TE Part Number	Description	Available In
2273104	M12 x 1.0 Straight socket Pigtail Shielded LED	4 positions PUR, 2 LED, Lengths: 1.5 m / 3.0 m / 5.0 m / 10.0 m
2273105	M12 x 1.0 Straight socket Pigtail Shielded LED	4 positions PUR or PVC, 3 LED, Lengths: 1.5 m / 3.0 m / 5.0 m / 10.0 m

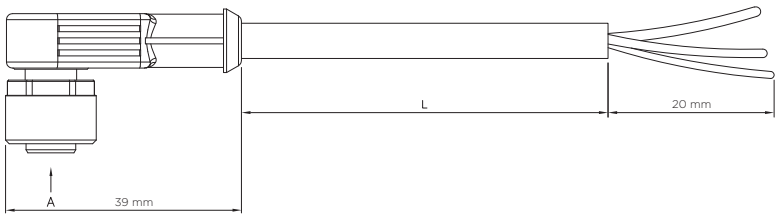

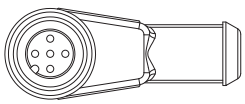

A-coded

M12 Series Male to Female Y-cables

TE Part Number	Description	Available In
2273107	M12 Y conn Male to 2 x M12 Female A	4 positions PUR or PVC, Lengths: 0.3 m / 0.6 m / 1.0 m / 1.5 m / 2.0 m

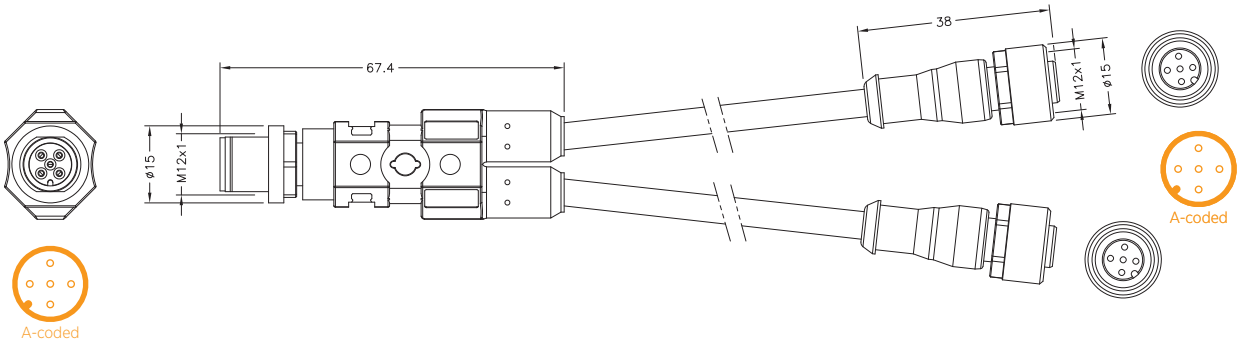

M8 to M12 Cable Assemblies

M8 Male to M12 Female Series

TE Part Number	Description	Available In
2273108	M8 Straight plug to M12 Straight socket Unshielded	3 positions PUR or PVC, Lengths: 0.3 m / 0.6 m / 1.0 m / 1.5 m / 2.0 m
2273109	M8 Strght plug to M12 Straight socket Unshielded	4 positions PUR or PVC, Lengths: 0.3 m / 0.6 m / 1.0 m / 1.5 m / 2.0 m

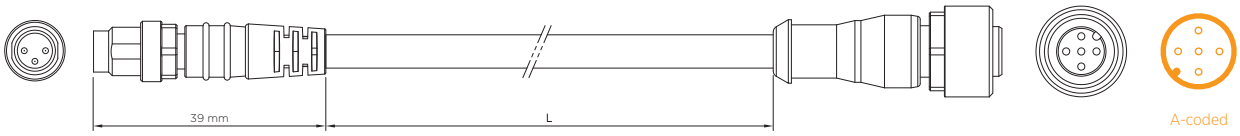

M8 Female to M12 Male Series

TE Part Number	Description	Available In
2273110	M8 Straight socket to M12 Straight plug Unshielded	3 positions PUR or PVC, Lengths: 0.3 m / 0.6 m / 1.0 m / 1.5 m / 2.0 m
2273111	M8 Straight socket to M12 Straight plug Unshielded	4 positions PUR or PVC, Lengths: 0.3 m / 0.6 m / 1.0 m / 1.5 m / 2.0 m

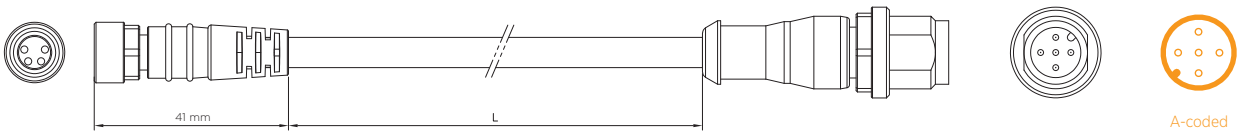

M12 to M12 Cable Assemblies

M12 Male to M12 Female Series

TE Part Number	Description	Available In
2273112	M12 Straight plug to M12 Straight socket Unshielded	3 positions PUR or PVC, Lengths: 0.3 m / 0.6 m / 1.0 m / 1.5 m / 2.0 m
2273113	M12 Straight plug to M12 Straight socket Unshielded	4 positions PUR or PVC, Lengths: 0.3 m / 0.6 m / 1.0 m / 1.5 m / 2.0 m
2273114	M12 Straight plug to M12 Straight socket Unshielded	5 positions PUR or PVC, Lengths: 0.3 m / 0.6 m / 1.0 m / 1.5 m / 2.0 m
2273115	M12 Straight plug to M12 Straight socket Unshielded	8 positions PUR, Lengths: 0.3 m / 0.6 m / 1.0 m / 1.5 m / 2.0 m

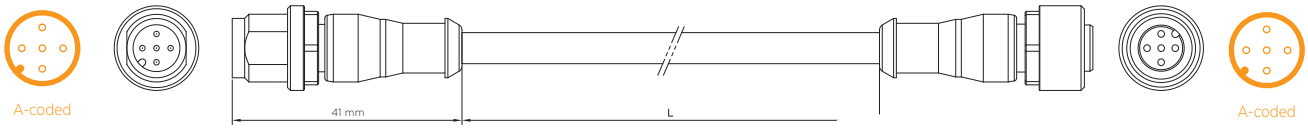

TE Part Number	Description	Available In
2273116	M12 Straight plug to M12 Angled socket Unshielded	3 positions PUR or PVC, Lengths: 0.3 m / 0.6 m / 1.0 m / 1.5 m / 2.0 m
2273117	M12 Straight plug to M12 Angled socket Unshielded	4 positions PUR or PVC, Lengths: 0.3 m / 0.6 m / 1.0 m / 1.5 m / 2.0 m
2273118	M12 Straight plug to M12 Angled socket Unshielded	5 positions PUR or PVC, Lengths: 0.3 m / 0.6 m / 1.0 m / 1.5 m / 2.0 m

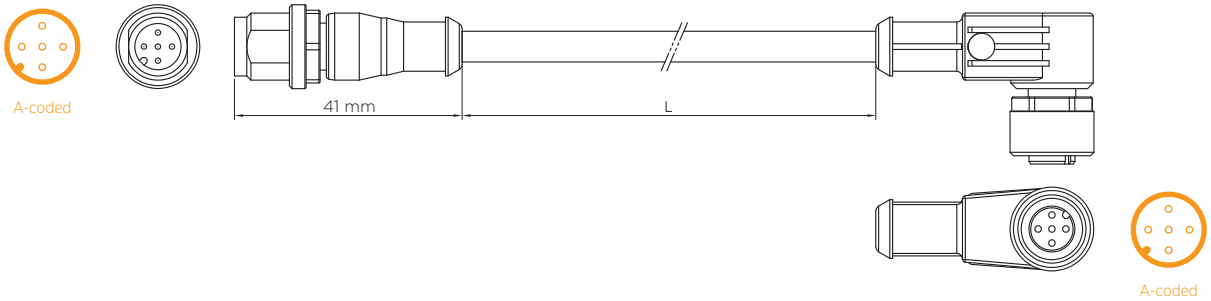

TE Part Number	Description	Available In
2273120	M12 Angled plug to M12 Straight socket Unshielded	3 positions PUR or PVC, Lengths: 0.3 m / 0.6 m / 1.0 m / 1.5 m / 2.0 m
2273121	M12 Angled plug to M12 Straight socket Unshielded	4 positions PUR or PVC, Lengths: 0.3 m / 0.6 m / 1.0 m / 1.5 m / 2.0 m
2273122	M12 Angled plug to M12 Straight socket Unshielded	5 positions PUR or PVC, Lengths: 0.3 m / 0.6 m / 1.0 m / 1.5 m / 2.0 m

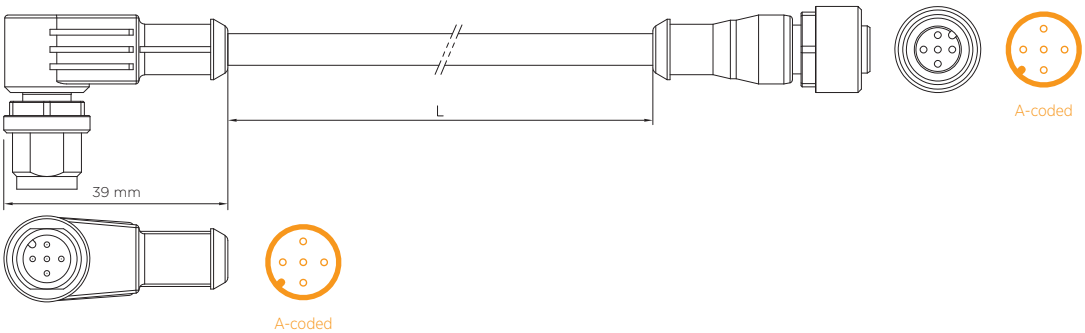

M8 to M8 Cable Assemblies

M8 Female to M8 Male Series LED

TE Part Number	Description	Available In
2273124	M8 Angled socket to M8 Straight plug 2 LED	3 positions PUR, PVC, PUR/PVC and Welding Spark resistant Lengths: 0.3 m / 0.6 m / 1.0 m / 1.5 m / 2.0 m

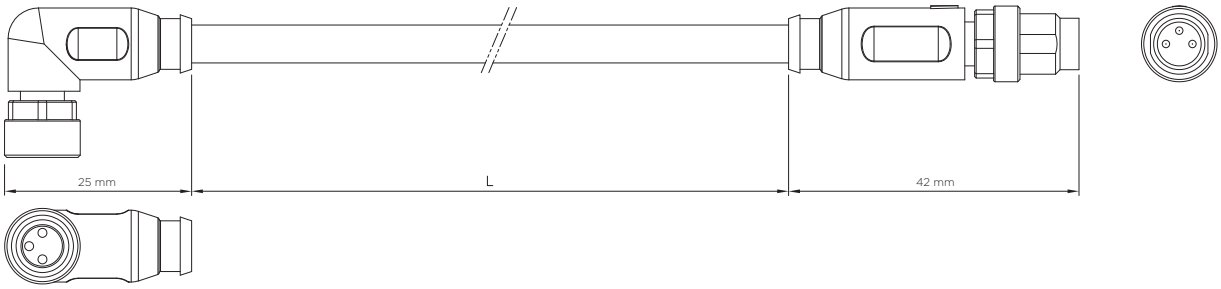

M12 to M12 Cable Assemblies

M12 Female to M12 Male Series LED

TE Part Number	Description	Available In
2273125	M12 Angled socket to M12 Straight plug 2 LED	3 positions PUR, PVC, PUR/PVC and Welding Spark resistant Lengths: 0.3 m / 0.6 m / 1.0 m / 1.5 m / 2.0 m

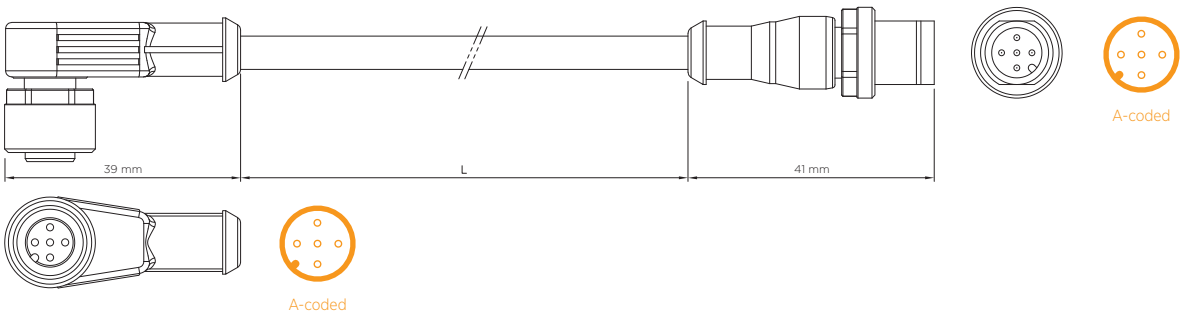

TE Part Number	Description	Available In
2273126	M12 Angled socket to M12 Straight plug 3 LED	4 positions PUR, PVC, PUR/PVC and Welding Spark resistant Lengths: 0.3 m / 0.6 m / 1.0 m / 1.5 m / 2.0 m
2273127	M12 Angled socket to M12 Straight plug 3 LED	5 positions PUR or PVC, PUR/PVC and Welding Spark resistant Lengths: 0.3 m / 0.6 m / 1.0 m / 1.5 m / 2.0 m

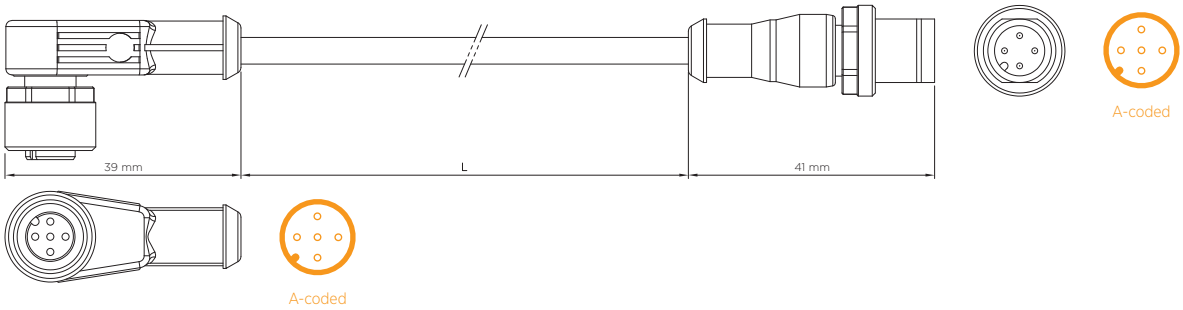

Cable Assembly Notes

I/O MODULES

Complementary to the M8/M12 cable assemblies and connectors, TE offers compact I/O modules for Industrial applications. The I/O modules are well accepted in the Industrial Automation industry and the concept of TE's I/O modules is simple, efficient and cost effective.

Standard (IEC):	IEC 61076-2-104 for all M8 series and IEC 61076-2-101 for all M12 series
Ambient temperature:	-25°C to +85°C for the connectors (for cable assemblies please refer to specific drawings)
Connector Contacts:	Current rating per contact is 4 A
Shielding: Yes/No	Refer to drawing
Suitable Cable Diameter:	Refer to drawing
IP Rating:	IP65/67
Sensor Type:	PNP

M8 – With Cables

M8 Series

Description	Positions	TE Part Number
PUR cable 3.0 m	3pos 10way	2273129-1
PUR cable 5.0 m	3pos 10way	2273129-2
PUR cable 10.0 m	3pos 10way	2273129-3
PUR cable 15.0 m	3pos 10way	2273129-4
PUR/PVC cable 3.0 m	3pos 10way	2-2273129-1
PUR/PVC cable 10.0 m	3pos 10way	2-2273129-2
PUR cable 5.0 m	3pos 10way	2273130-1
PUR cable 3.0 m	4pos 10way	2273132-1
PUR cable 10.0 m	4pos 10way	2273132-2
PUR/PVC cable 3.0 m	4pos 10way	1-2273132-1
PUR/PVC cable 10.0 m	4pos 10way	1-2273132-2
PUR cable 5.0 m	3pos 4way	2273133-1
PUR cable 10.0 m	3pos 4way	2273133-2
PUR/PVC cable 5.0 m	3pos 4way	1-2273133-1
PUR/PVC cable 5.0 m	3pos 6way	2273137-1
PUR cable 3.0 m	3pos 6way	2273138-1
PUR cable 5.0 m	3pos 6way	2273138-2
PUR/PVC cable 3.0 m	3pos 8way	2273142-1
PUR/PVC cable 5.0 m	3pos 8way	2273142-2
PUR/PVC cable 10.0 m	3pos 8way	2273142-3
PUR cable 3.0 m	3pos 8way	1-2273142-1
PUR cable 5.0 m	3pos 8way	1-2273142-2
PUR cable 10.0 m	3pos 8way	1-2273142-3
PUR cable 15.0 m	3pos 8way	1-2273142-4
PUR cable 5.0 m	3pos 8way	2273144-1
PUR cable 10.0 m	3pos 8way	2273144-2

2273129

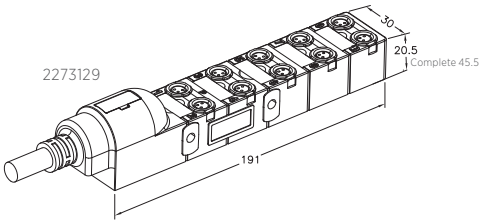

2273130

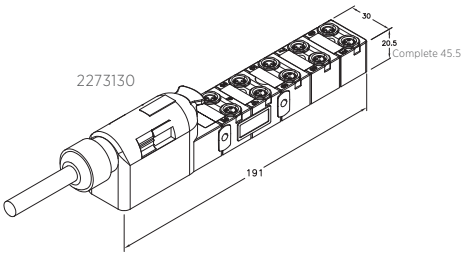

2273132

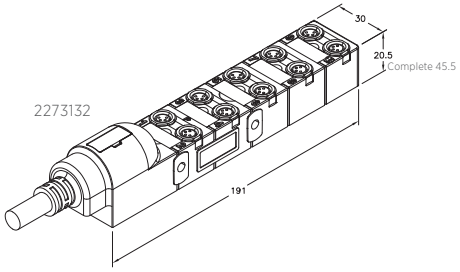

2273133

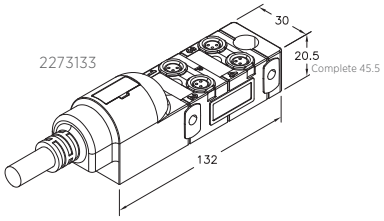

2273137

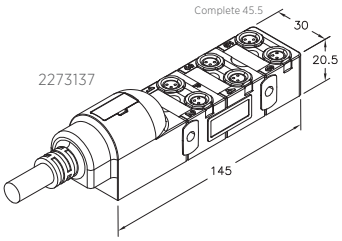

2273138

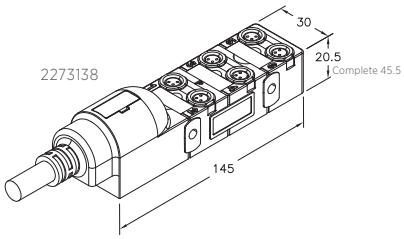

2273142

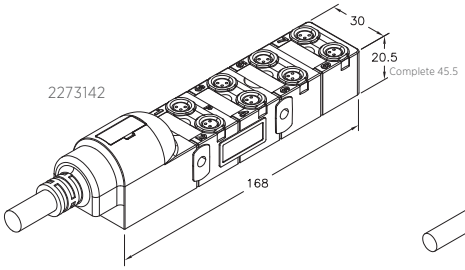

2273144

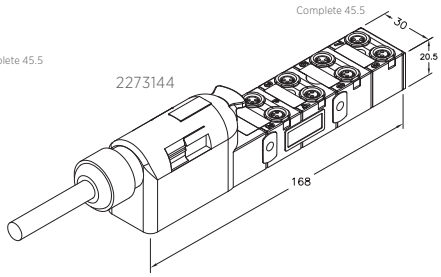

All dimensions in mm.

M8 – With M12 Plug Connection

M8 Series

Description	Positions	TE Part Number
Dist. box M8 3pos 10way M12	12 pos. conn	2273131-1
Dist. box M8 3pos 04way M12	12 pos.conn	2273134-1
Dist. box M8 3pos 04way M12	8 pos. conn	2273135-1
Dist. box M8 3pos 06way M12	12 pos. conn	2273139-1
Dist. box M8 3pos 06way M12	8 pos. conn	2273140-1
Dist. box M8 3pos 08way M12	12 pos. conn	2273146-1

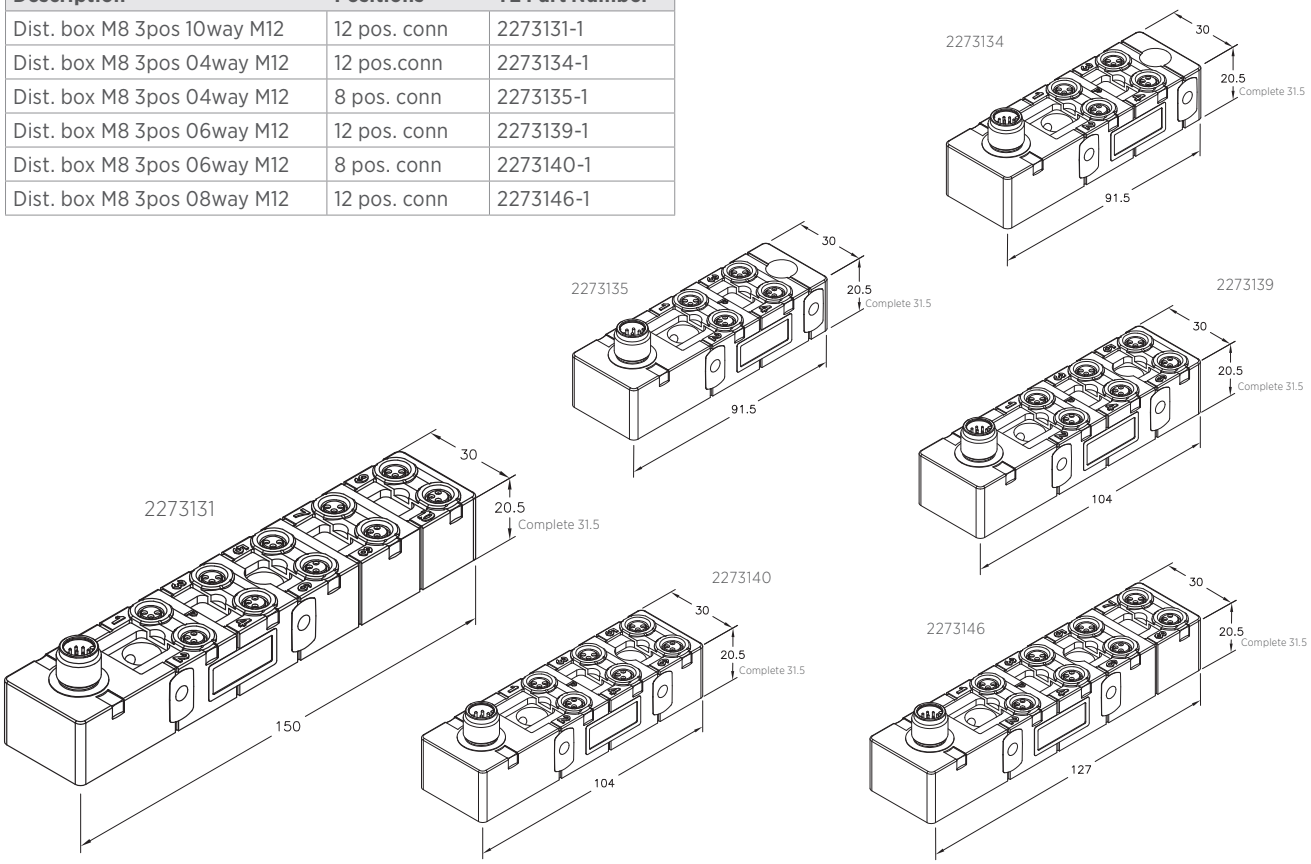

M8 – For Homerun Connection

M8 Series

Description	Positions	TE Part Number
Distr box M8 3pos 10way PNP	3pos 10way	2273128-1
Distr box M8 connection cap no cable	Nil	2273136-1
Inline or side mounting	3pos 8way	2273141-1
PUR cable 3.0 m	4pos 8way	2273147-1

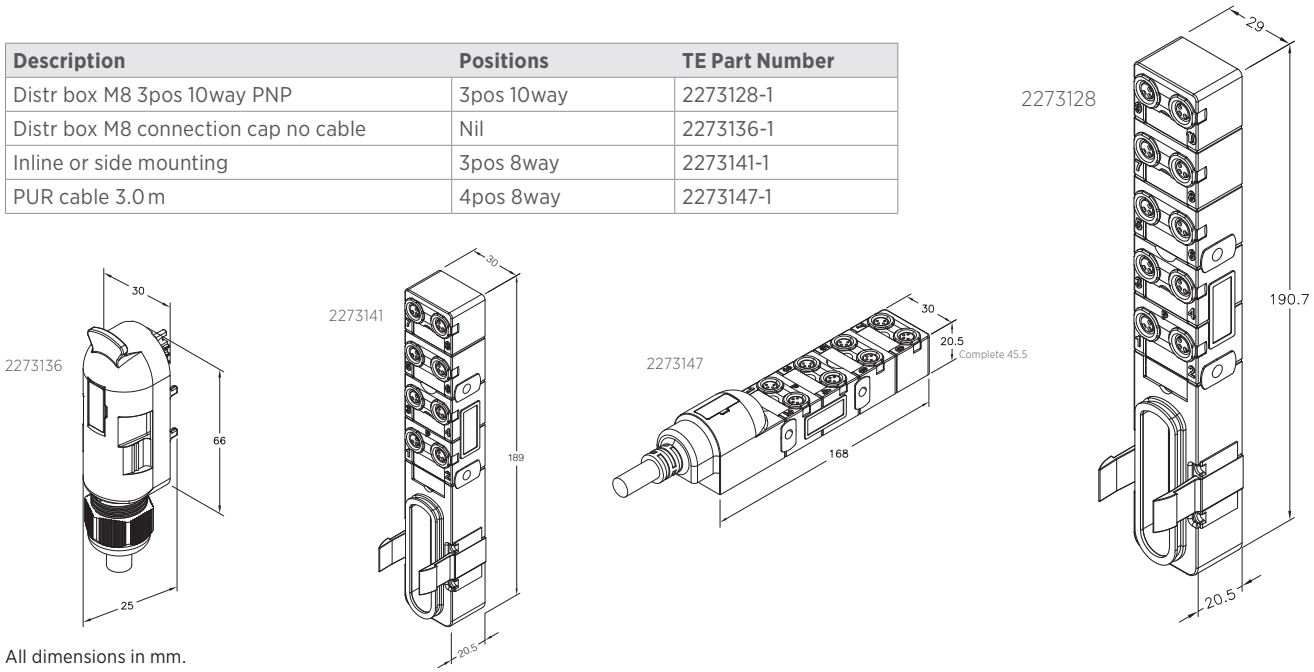

All dimensions in mm.

M12 – With Cable

M12 Series

Description	Positions	TE Part Number
PUR/PVC cable 5.0 m	4pos 4way	2273150-1
PUR/PVC cable 10.0 m	4pos 4way	2273150-2
PUR/PVC cable 5.0 m	5pos 4way	2273153-1
PUR/PVC cable 10.0 m	5pos 4way	2273153-2
With PUR/PV Homerun Cable 10.0 m	5pos 4way	2273155-1
PUR/PVC cable 3.0 m	4pos 8way	2273157-1
PUR/PVC cable 5.0 m	4pos 8way	2273157-2
PUR/PVC cable 10.0 m	4pos 8way	2273157-3
PUR/PVC cable 15.0 m	4pos 8way	2273157-4
PUR/PVC cable 3.0 m	5pos 8way	2273163-1
PUR/PVC cable 5.0 m	5pos 8way	2273163-2
PUR/PVC cable 10.0 m	5pos 8way	2273163-3
PUR/PVC cable 15.0 m	5pos 8way	2273163-4
PUR/PVC cable 20.0 m	5pos 8way	2273163-5
PUR cable 3.0 m	5pos 8way	1-2273163-1
PUR cable 5.0 m	5pos 8way	1-2273163-2
PUR cable 10.0 m	5pos 8way	1-2273163-3
PUR cable 15.0 m	5pos 8way	1-2273163-4
PUR cable 20.0 m	5pos 8way	1-2273163-5
PUR/PVC cable 5.0 m	5pos 8way	2273164-1

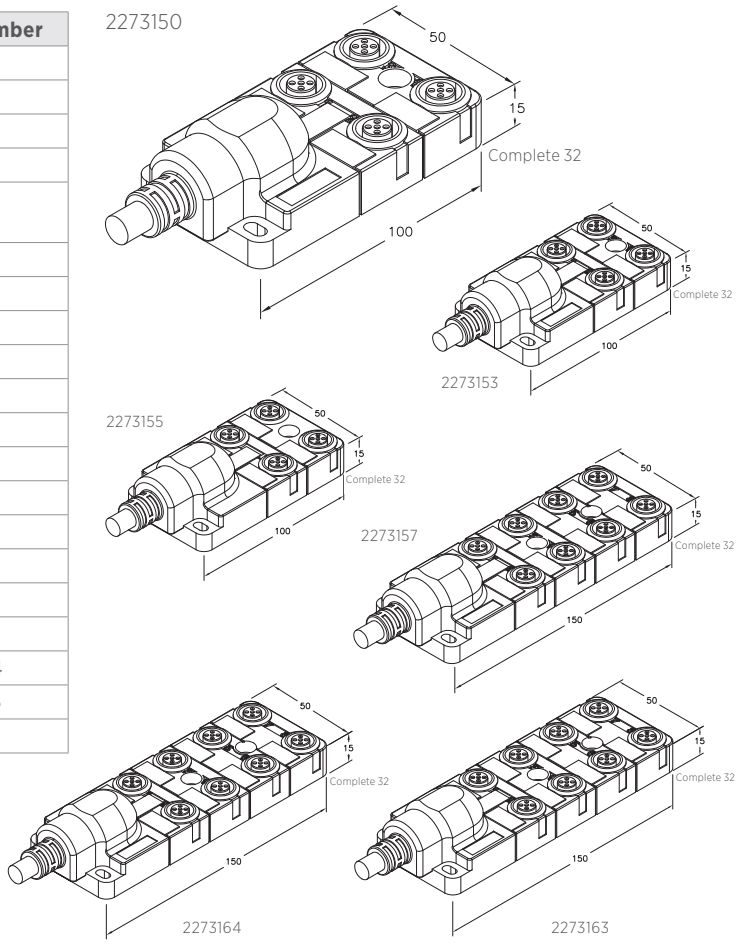

M12 – With M12/M23 Plug Connection

M12 Series

Description	Positions	TE Part Number
Without homerun cable	4pos 8way	2273158-1
Distr box M12 4-5pos 8way M12/12p PNP	4-5pos 8way	2273161-1
Distr box M12 5pos 4way M23/19p PNP	5pos 4way	2273165-1

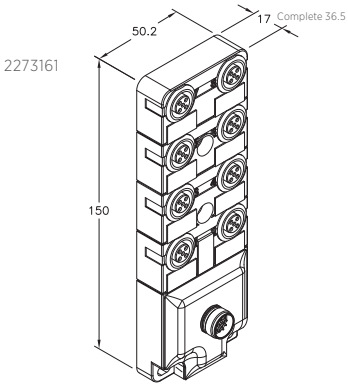

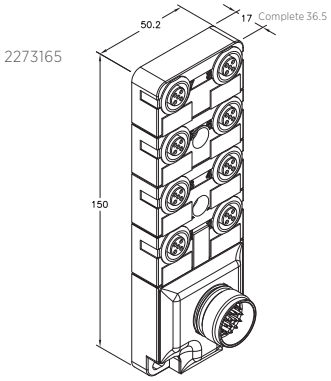

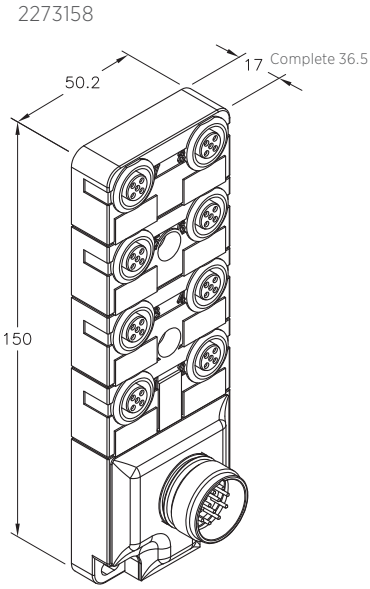

M12 – No Cable/With Cable Gland

M12 Series

Description	Positions	TE Part Number
With plug cap	4pos 4way	2273151-1
Without homerun cable	5pos 4way	2273152-1
With plug cap	5pos 4way	2273154-1
Without homerun cable	4pos 8way	2273156-1
With plug cap	4pos 8way	2273159-1
With plug cap	4pos 8way	2273160-1
Without homerun cable	5pos 8way	2273162-1
With plug cap	5pos 8way	2273166-1
With plug cap	5pos 8way	2273167-1

2273151

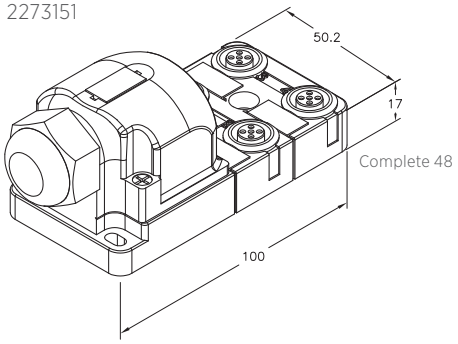

2273152

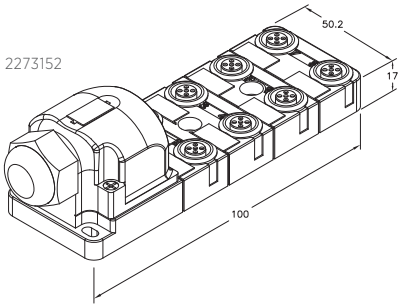

2273154

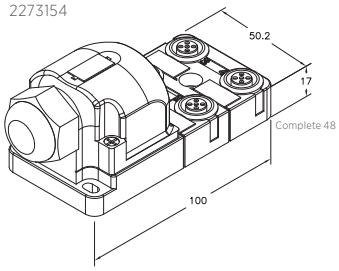

2273156

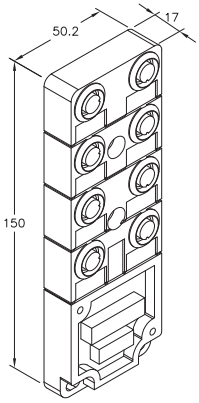

2273159

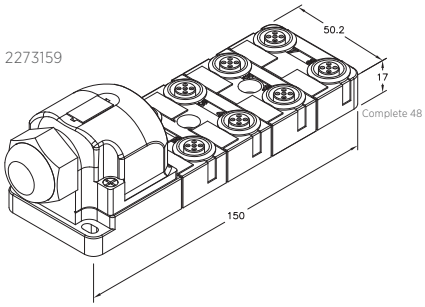

2273160

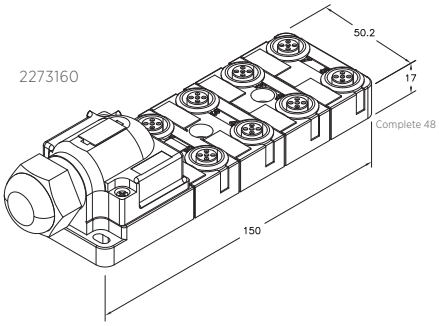

2273162

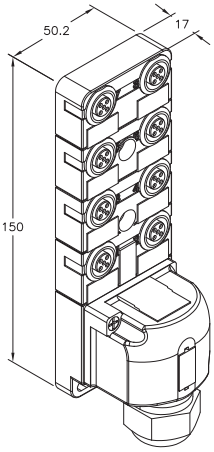

2273166

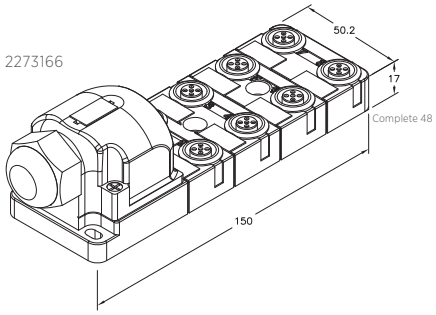

2273167

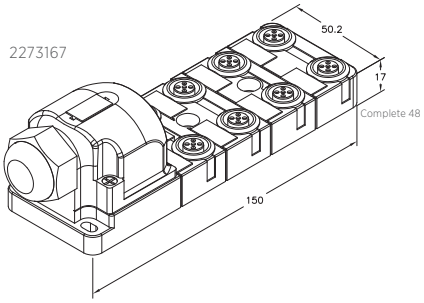

All dimensions in mm.

I/O Module Notes

Online Configurator

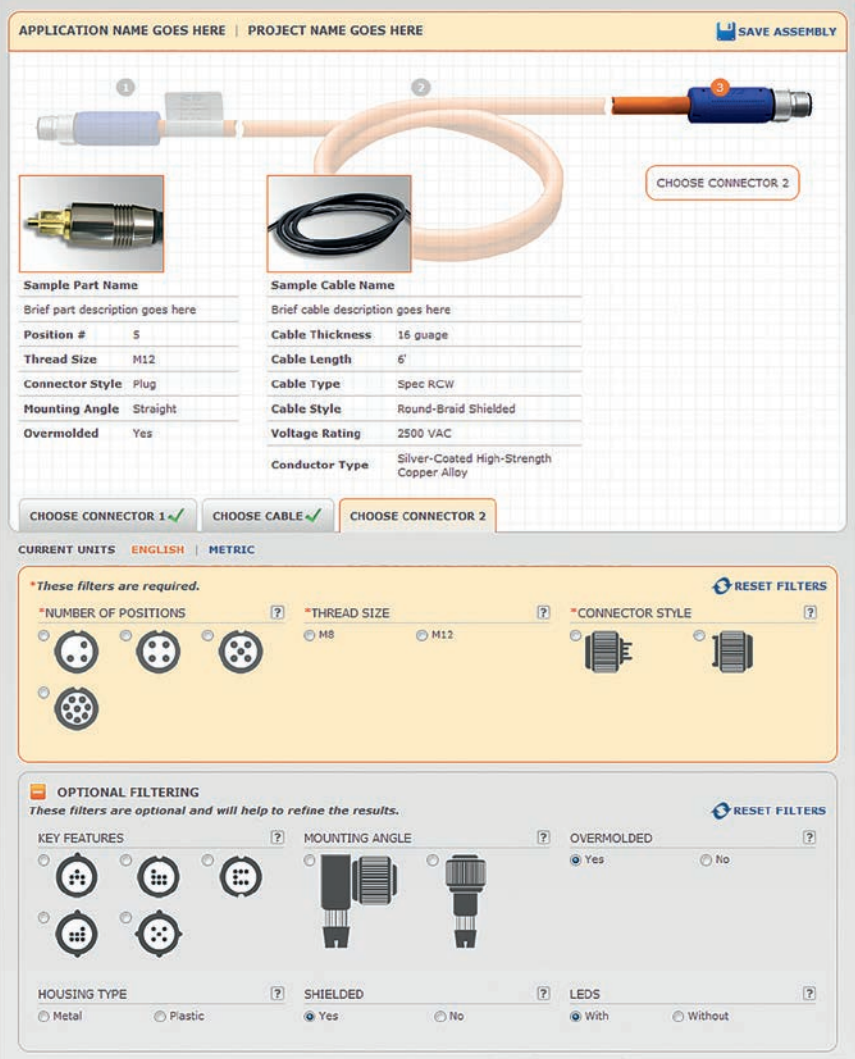

WHAT YOU NEED, WHEN YOU NEED IT – WITH TE'S ONLINE CONFIGURATOR

Easy to use

Getting the information you are looking for can be a long and tedious exercise. The TE configurator walks you through the different options, attributes and characteristics with a straightforward and easy to use navigation.

Easy to choose

Product-selection made easy. With the TE configurator you choose – and get – exactly what you were looking for.

Quick response

Selected what you were looking for? With a quick turn capability, immediate quotes and a fast delivery of your product is what TE is striving for.

Your cable choice

Didn't find the cable specifications you were looking for? The TE configurator provides the ability for custom cable lengths.

Your needs – your choice

Don't bother with long lists of specifications, data and information that you are not interested in. Build an M8/M12 solution that fits your needs and your application.

Let's connect

We make it easy to connect with our experts and are ready to provide all the support you need. Just call your local support number or visit www.te.com/industrial to chat with a Product Information Specialist.

Technical Support

te.com/support-center

Australia	+86 400-820-6015
Austria	+43 1-9056-0
Belgium	+31 73-6246999
Brazil	+55 11-2103-6000
China	+86 400-820-6015
Czech Republic	+42 02-7201-1103
Denmark	+46 8-5072-5000
Estonia	+37 2677-8673
Finland	+46 8-5072-5000
France	+33 1-34-20-8686
Germany	+49 6151-607-1999
Greece	+97 1-4-347-0226
Holland	+31 73-6246999
Hungary	+36 1-2892040
India	+86 400-820-6015
Ireland	+1 800-882-391
Italy	+39 011-4012111
Japan	+044-844-8052
Korea	+02-3415-4607
Latvia	+37 2-6778-673
Lithuania	+37 037426900
Luxembourg	+31 73-6246999
Netherlands	+31 73-6246999
New Zealand	+86 400-820-6015
Norway	+46 8-5072-5000
Poland	+48 22-4576750
Portugal	+34 91-6630420
Russia	+74 95-790-790-2200
Slovakia	+42 02-720-11102
Slovenia	+38 615-602-132
South Africa	+97 150-457-0806
Spain	+34 932-910-330
Sweden	+46 8-5072-5000
Switzerland	+41 71-447-0447
Taiwan	+86 400-820-6015
Turkey	+90 212-282-6053
United Kingdom	+44 0800-267666
United States of America	800-522-6752

te.com

© 2014 Tyco Electronics Corporation, a TE Connectivity Ltd. Company. All Rights Reserved. 1-1773701-8 IND WR 09/2014

TE Connectivity and the TE connectivity (logo) are trademarks of the TE Connectivity Ltd. family of companies. Other logos, product and Company names mentioned herein may be trademarks of their respective owners. While TE has made every reasonable effort to ensure the accuracy of the information in this brochure, TE does not guarantee that it is error-free, nor does TE make any other representation, warranty or guarantee that the information is accurate, correct, reliable or current. TE reserves the right to make any adjustments to the information contained herein at any time without notice. TE expressly disclaims all implied warranties regarding the information contained herein, including, but not limited to, any implied warranties of merchantability or fitness for a particular purpose. The dimensions in this brochure are for reference purposes only and are subject to change without notice. Specifications are subject to change without notice. Consult TE for the latest dimensions and design specifications.

ООО «ЛайфЭлектроникс» “LifeElectronics” LLC

ИНН 7805602321 КПП 780501001 Р/С 40702810122510004610 ФАКБ "АБСОЛЮТ БАНК" (ЗАО) в г.Санкт-Петербурге К/С 30101810900000000703 БИК 044030703

Компания «Life Electronics» занимается поставками электронных компонентов импортного и отечественного производства от производителей и со складов крупных дистрибьюторов Европы, Америки и Азии.

С конца 2013 года компания активно расширяет линейку поставок компонентов по направлению коаксиальный кабель, кварцевые генераторы и конденсаторы (керамические, пленочные, электролитические), за счёт заключения дистрибьюторских договоров

Мы предлагаем:

- *Конкурентоспособные цены и скидки постоянным клиентам.*
- *Специальные условия для постоянных клиентов.*
- *Подбор аналогов.*
- *Поставку компонентов в любых объемах, удовлетворяющих вашим потребностям.*

- *Приемлемые сроки поставки, возможна ускоренная поставка.*
- *Доставку товара в любую точку России и стран СНГ.*
- *Комплексную поставку.*
- *Работу по проектам и поставку образцов.*
- *Формирование склада под заказчика.*

- *Сертификаты соответствия на поставляемую продукцию (по желанию клиента).*
- *Тестирование поставляемой продукции.*
- *Поставку компонентов, требующих военную и космическую приемку.*
- *Входной контроль качества.*
- *Наличие сертификата ISO.*

В составе нашей компании организован Конструкторский отдел, призванный помогать разработчикам, и инженерам.

Конструкторский отдел помогает осуществить:

- *Регистрацию проекта у производителя компонентов.*
- *Техническую поддержку проекта.*
- *Защиту от снятия компонента с производства.*
- *Оценку стоимости проекта по компонентам.*
- *Изготовление тестовой платы монтаж и пусконаладочные работы.*

Тел: +7 (812) 336 43 04 (многоканальный)
Email: org@lifeelectronics.ru

www.lifeelectronics.ru