Quad Low Power, Precision Comparator

CMP04

FEATURES
High Gain: 200 V/mV Typ
Single- or Dual-Supply Operation
Input Voltage Range Includes Ground
Low Power Consumption (1.5 mW/Comparator)
Low Input Bias Current: 100 nA Max
Low Input Offset Current: 10 nA Max
Low Offset Voltage: 1 mV Max
Low Output Saturation Voltage: 250 mV @ 4 mA
Logic Output Compatible with TTL, DTL, ECL, MOS, and CMOS
Directly Replaces LM139/LM239/LM339 Comparators

PIN CONNECTIONS

14-Lead SOIC

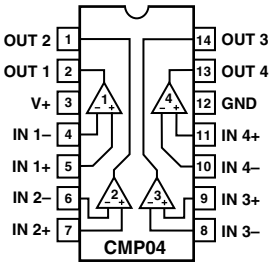

GENERAL DESCRIPTION

Four precision independent comparators comprise the CMP04. Performance highlights include a very low offset voltage, low output saturation voltage, and high gain in a single-supply design. The input voltage range includes ground for single-supply operation and V– for split supplies. A low power supply current of 2 mA, which is independent of supply voltage, makes this the preferred comparator for precision applications requiring minimal power consumption. Maximum logic interface flexibility is offered by the open-collector TTL output.

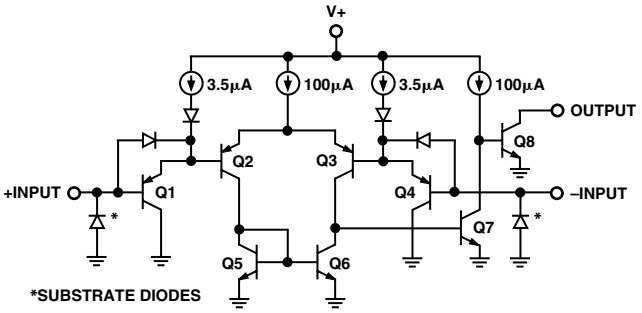

Figure 1. Simplified Schematic (1/4 CMP04)

TYPICAL INTERFACE

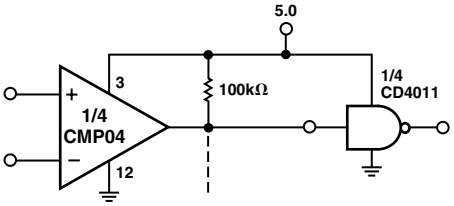

Figure 2a. Driving CMOS

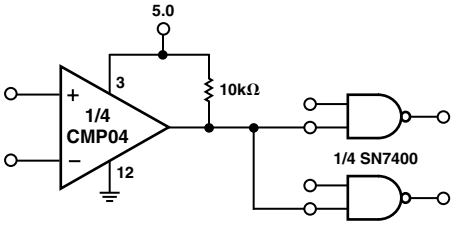

Figure 2b. Driving TTL

REV. D

Information furnished by Analog Devices is believed to be accurate and reliable. However, no responsibility is assumed by Analog Devices for its use, nor for any infringements of patents or other rights of third parties that may result from its use. No license is granted by implication or otherwise under any patent or patent rights of Analog Devices. Trademarks and registered trademarks are the property of their respective companies.

One Technology Way, P.O. Box 9106, Norwood, MA 02062-9106, U.S.A.
Tel: 781/329-4700 **www.analog.com**
Fax: 781/326-8703 **© 2003 Analog Devices, Inc. All rights reserved.**

CMP04–SPECIFICATIONS

ELECTRICAL CHARACTERISTICS (@ V+ = 5 V, T_A = 25°C, unless otherwise noted.)

Parameter	Symbol	Conditions	Min	Typ	Max	Unit
Input Offset Voltage	V_{OS}	R_S = 0 Ω, R_L = 5.1 kΩ, V_O = 1.4 V[1]		0.4	1	mV
Input Offset Current	I_{OS}	$I_{IN}(+) - I_{IN}(-)$, R_L = 5.1 kΩ, V_O = 1.4 V		2	10	nA
Input Bias Current	I_B	$I_{IN}(+)$ or $I_{IN}(-)$		25	100	nA
Voltage Gain	A_V	$R_L \geq$ 15 kΩ, V+ = 15 V[2]	80	200		V/mV
Large Signal Response Time	t_r	V_{IN} = TTL Logic Swing, V_{REF} = 1.4 V[3]				
		V_{RL} = 5 V, R_L = 5.1 kΩ		300		ns
Small Signal Response Time	t_r	V_{IN} = 100 mV Step[3], 5 mV Overdrive				
		V_{RL} = 5 V, R_L = 5.1 kΩ		1.3		µs
Input Voltage Range	CMVR	Note 4	0		V+ – 1.5	V
Common-Mode Rejection Ratio	CMRR	Notes 2, 5	80	100		dB
Power Supply Rejection Ratio	PSRR	V+ = 5 V to 18 V[2]	80	100		dB
Saturation Voltage	V_{OL}	$V_{IN}(-) \geq$ 1 V, $V_{IN}(+)$ = 0, $I_{SINK} \leq$ 4 mA		250	400	mV
Output Sink Current	I_{SINK}	$V_{IN}(-) \geq$ 1 V, $V_{IN}(+)$ = 0, $V_O \leq$ 1.5 V	6	16		mA
Output Leakage Current	I_{LEAK}	$V_{IN}(+) \geq$ 1 V, $V_{IN}(-)$ = 0, V_O = 30 V		0.1	100	nA
Supply Current	I+	$R_L = \infty$, All Comps V+ = 30 V		0.8	2.0	mA

NOTES
[1]At output switch point, V_O = 1.4 V, R_S = 0 Ω with V+ from 5 V, and over the full input common-mode range (0 V to V+ – 1.5 V).
[2]Guaranteed by design.
[3]Sample tested.
[4]The input common-mode voltage or input signal voltage should not be allowed to go negative by more than 0.3 V. The upper end of the common-mode voltage range is V+ – 1.5 V, but either or both inputs can go to 30 V without damage.
[5]$R_L \geq$ 15 kΩ, V+ = 15 V, V_{CM} = 1.5 V to 13.5 V.

Specifications subject to change without notice.

ABSOLUTE MAXIMUM RATINGS[1]

Supply Voltage . . . . . +36 V or ±18 V
Differential Input Voltage . . . . . 36 V dc
Input Voltage . . . . . –0.3 V to +36 V
Operating Temperature Range
CMP04FS . . . . . –40°C to +85°C
Junction Temperature (T_J) . . . . . –65°C to +150°C
Storage Temperature Range . . . . . –65°C to +150°C
Input Current (V_{IN} < –3.0 V) . . . . . 50 mA
Output Short Circuit to GND . . . . . Continuous
Lead Temperature (Soldering, 60 sec) . . . . . 300°C

Package Type	θ_{JA}[2]	θ_{JC}	Unit
14-Lead SOIC	120	36	°C/W

NOTES
[1]Absolute maximum ratings apply to both DICE and packaged parts, unless otherwise noted. Stresses above those listed under Absolute Maximum Ratings may cause permanent damage to the device. This is a stress rating only; functional operation of the device at these or any other conditions above those listed in the operational sections of this specification is not implied. Exposure to absolute maximum rating conditions for extended periods may affect device reliability.
[2]θ_{JA} is specified for worst-case mounting conditions, i.e., θ_{JA} is specified for device soldered to printed circuit board for SOIC package.

ORDERING GUIDE

Model	T_A = 25°C V_{OS}	Temperature Ranges	Package Descriptions	Package Options
CMP04FS	1 mV	–40°C to +85°C	14-Lead SOIC	R-14

CAUTION

ESD (electrostatic discharge) sensitive device. Electrostatic charges as high as 4000 V readily accumulate on the human body and test equipment and can discharge without detection. Although the CMP04 features proprietary ESD protection circuitry, permanent damage may occur on devices subjected to high energy electrostatic discharges. Therefore, proper ESD precautions are recommended to avoid performance degradation or loss of functionality.

ELECTRICAL CHARACTERISTICS (@ V+ = 5 V, –40°C ≤ T_A ≤ +85°C for CMP04FS, unless otherwise noted.)

Parameter	Symbol	Conditions	CMP04F[1] Min	Typ	Max	Unit
Input Offset Voltage	V_{OS}	R_S = 0 Ω, R_L = 5.1 kΩ		1	2	mV
		V_O = 1.4 V[2]		1	2	mV
Input Offset Current	I_{OS}	$I_{IN}(+) - I_{IN}(-)$		4	20	nA
		R_L = 5.1 kΩ		4	20	nA
		V_O = 1.4 V		4	20	nA
Input Bias Current	I_B	$I_{IN}(+)$ or $I_{IN}(-)$		40	200	nA
Voltage Gain	A_V	R_L ≥ 15 kΩ, V+ = 15 V[3]	70	125		V/mV
Large Signal Response Time	t_r	V_{IN} = TTL Logic Swing		300		ns
		V_{REF} = 1.4 V[4]		300		ns
		V_{RL} = 5 V, R_L = 5.1 kΩ		300		ns
Small Signal Response Time	t_r	V_{IN} = 100 mV Step[4]		1.3		µs
		5 mV Overdrive		1.3		µs
		V_{RL} = 5 V, R_L = 5.1 kΩ		1.3		µs
Input Voltage Range	CMVR	Note 5	0		V+ – 1.5	V
Common-Mode Rejection Ratio	CMRR	Notes 1, 3	60	100		dB
Power Supply Rejection Ratio	PSRR	V+ = 5 V to 18 V	80	100		dB
Saturation Voltage	V_{OL}	$V_{IN}(-)$ ≥ 1 V, $V_{IN}(+)$ = 0,		250	700	mV
		I_{SINK} ≤ 4 mA		250	700	mV
Output Sink Current	I_{SINK}	$V_{IN}(-)$ ≥ 1 V,	5	16		mA
		$V_{IN}(+)$ = 0, V_O ≤ 1.5 V	5	16		mA
Output Leakage Current	I_{LEAK}	$V_{IN}(+)$ ≥ 1 V,		0.1	200	nA
		$V_{IN}(-)$ = 0, V_O = 30 V		0.1	200	nA
Supply Current	I+	R_L = ∞, All Comps		1.2	3.0	mA
		V+ = 30 V		1.2	3.0	mA

NOTES
[1]R_L ≥ 15 kΩ, V+ = 15 V, V_{CM} = 1.5 V to 13.5 V.
[2]At output switch point, V_O = 1.4 V, R_S = 0 Ω with V+ from 5 V; and over the full input common-mode range (0 V to V+ –1.5 V).
[3]Guaranteed by design.
[4]Sample tested.
[5]The input common-mode voltage or input signal voltage should not be allowed to go negative by more than 0.3 V. The upper end of the common-mode voltage range is V+ – 1.5 V, but either or both inputs can go to +30 V without damage.

Specifications subject to change without notice.

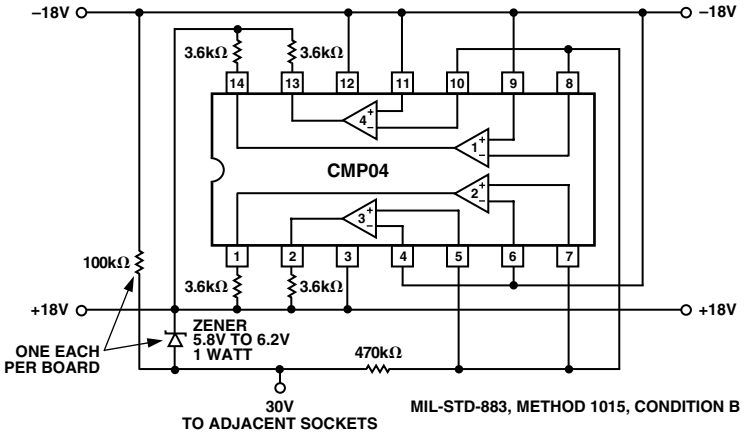

Figure 3. Burn-In Circuit

CMP04–Typical Performance Characteristics

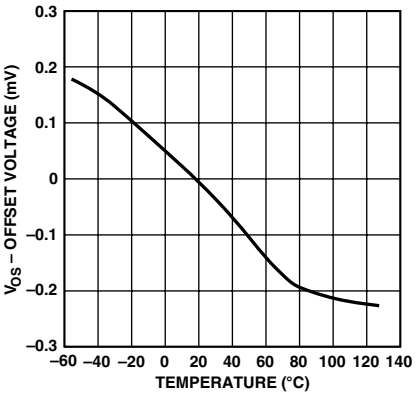

TPC 1. Offset Voltage vs. Temperature

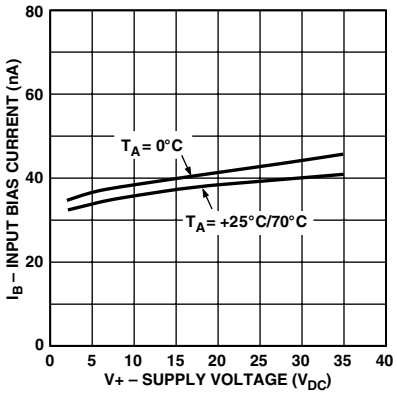

TPC 2. Input Bias Current vs. V+ and Temperature

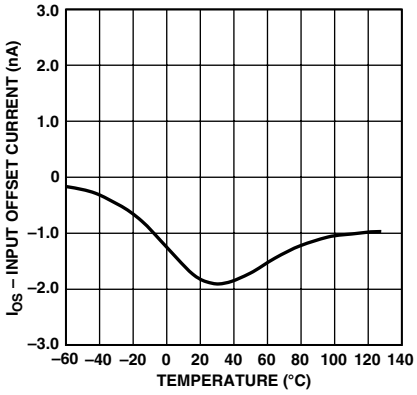

TPC 3. Input Offset Current vs. Temperature

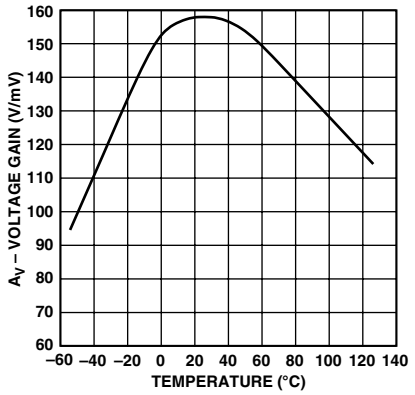

TPC 4. Voltage Gain vs. Temperature

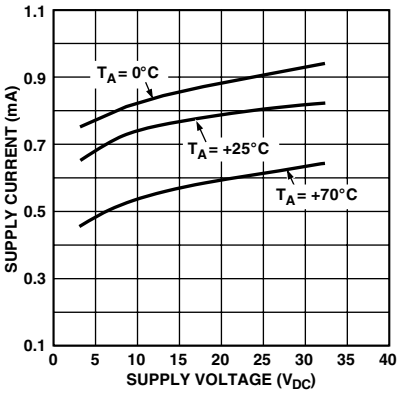

TPC 5. Supply Current vs. Supply Voltage

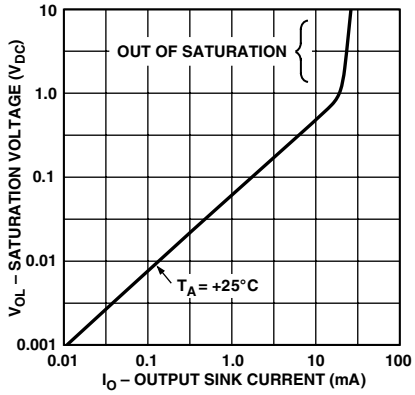

TPC 6. Output Voltage vs. Output Current and Temperature

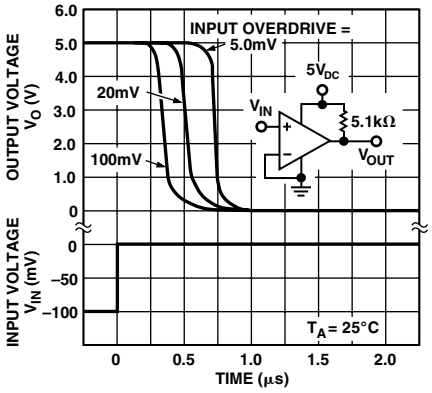

TPC 7. Response Time for Various Input Overdrives—Negative Transition

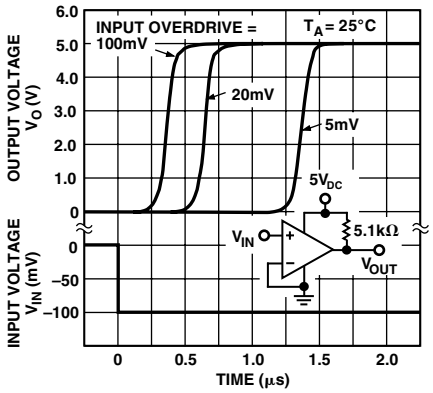

TPC 8. Response Time for Various Input Overdrives—Positive Transition

TYPICAL APPLICATIONS

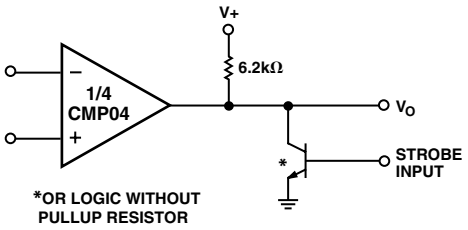

Figure 4. Output Strobing

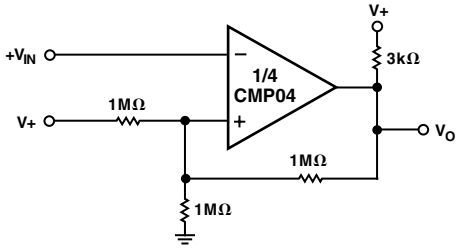

Figure 7. Inverting Comparator with Hysteresis

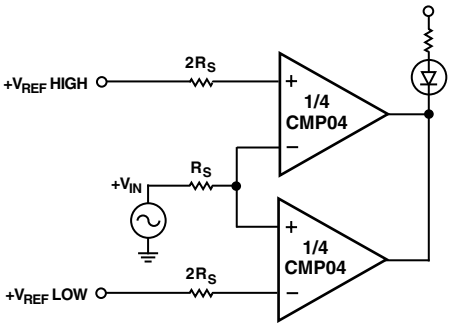

Figure 5. Limit Comparator

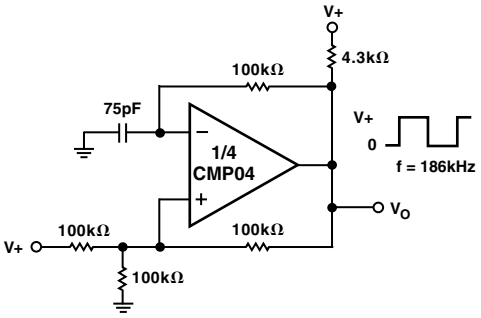

Figure 8. Square Wave Oscillator

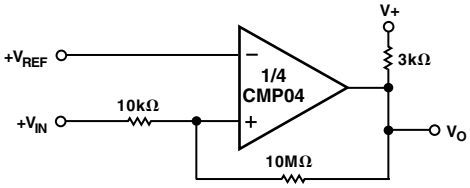

Figure 6. Noninverting Comparator with Hysteresis

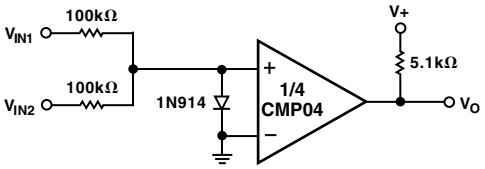

Figure 9. Comparing Input Voltages of Opposite Polarity

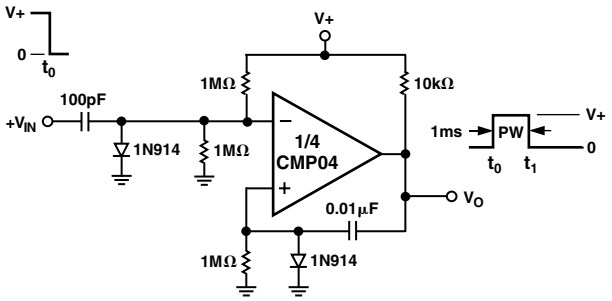

Figure 10. One-Shot Multivibrator

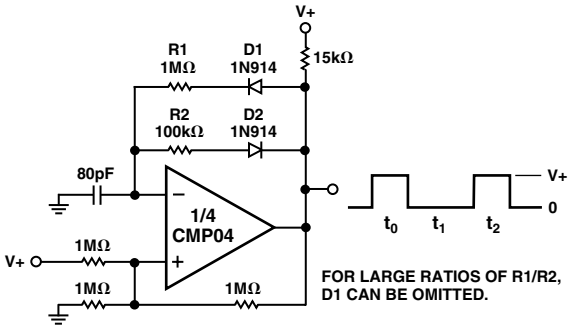

Figure 12. Pulse Generator

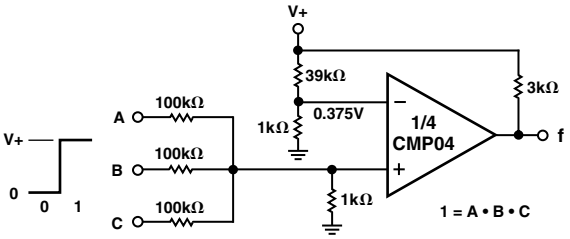

Figure 11. AND Gate

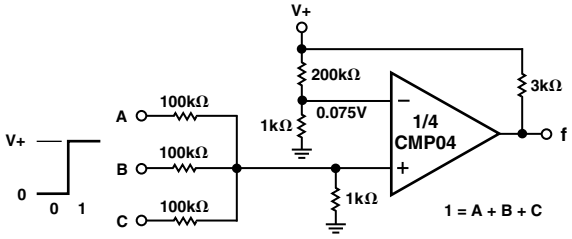

Figure 13. OR Gate

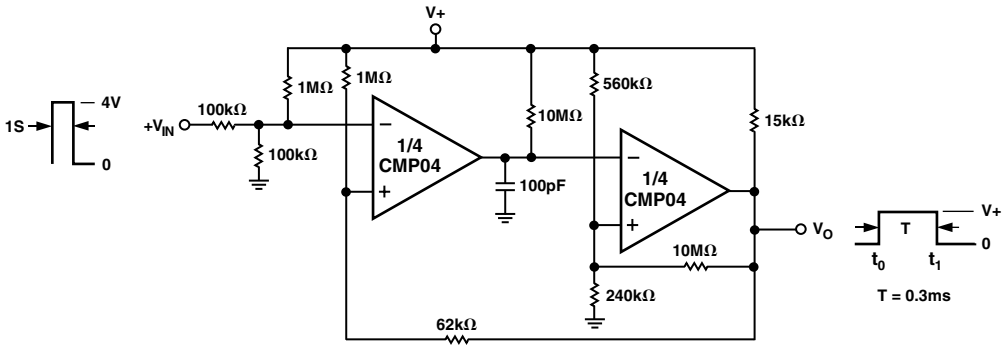

Figure 14. One-Shot Multivibrator with Input Lockout

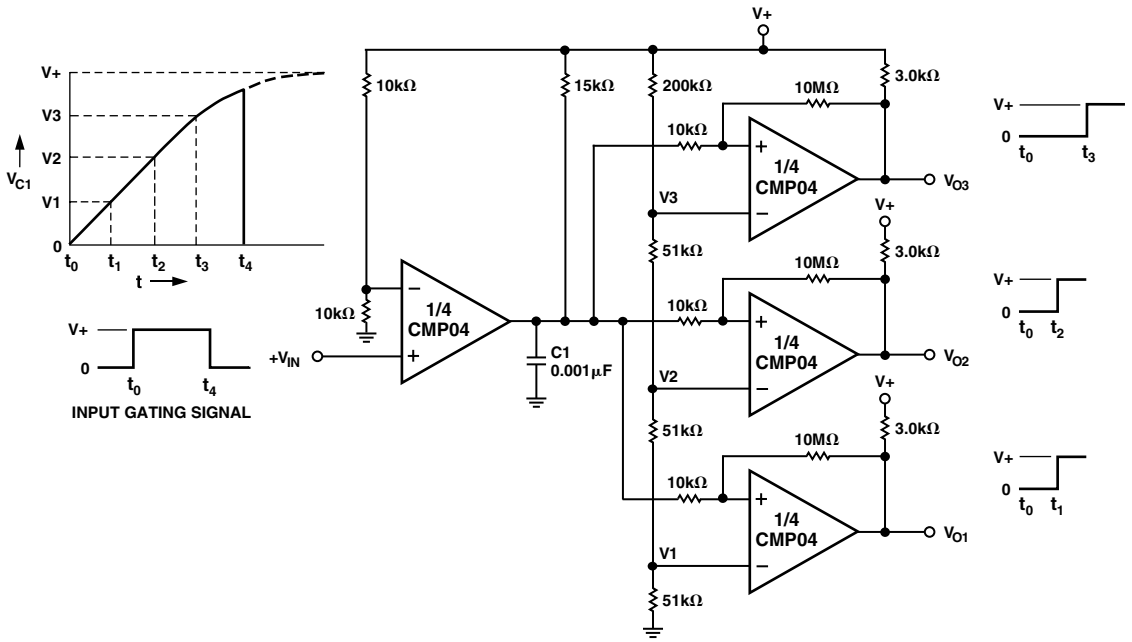

Figure 15. Time Delay Generator

OUTLINE DIMENSIONS

14-Lead Standard Small Outline Package [SOIC]
Narrow Body
(R-14)

Dimensions shown in millimeters and (inches)

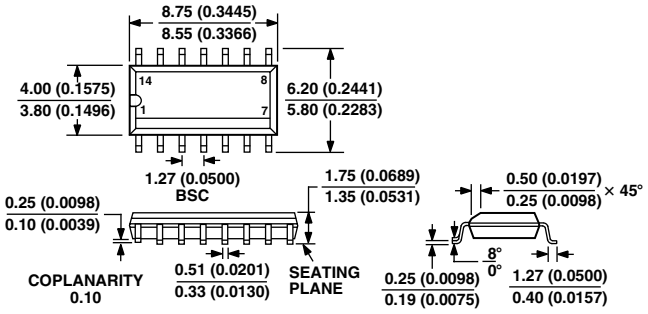

COMPLIANT TO JEDEC STANDARDS MS-012AB
CONTROLLING DIMENSIONS ARE IN MILLIMETERS; INCH DIMENSIONS (IN PARENTHESES) ARE ROUNDED-OFF MILLIMETER EQUIVALENTS FOR REFERENCE ONLY AND ARE NOT APPROPRIATE FOR USE IN DESIGN

C00266–0–3/03(D)

Revision History

Location	Page
3/03—Data Sheet changed from REV. C to REV. D.	
Renumbered TPCs and Figures	Global
Deletion of 14-Lead CERDIP and 14-Lead PDIP information	Global
Changes to FEATURES	1
Changes to PIN CONNECTIONS	1
Changes to ABSOLUTE MAXIMUM RATINGS	2
Changes to ORDERING GUIDE	2
Changes to ELECTRICAL CHARACTERISTICS	3
Removal of DICE CHARACTERISTICS, WAFER TEST LIMITS, and TYPICAL ELECTRICAL CHARACTERISTICS sections	4
Changes to TPCs 2, 5, and 6	4
Updated OUTLINE DIMENSIONS	8

ООО «ЛайфЭлектроникс» “LifeElectronics” LLC

ИНН 7805602321 КПП 780501001 Р/С 40702810122510004610 ФАКБ "АБСОЛЮТ БАНК" (ЗАО) в г.Санкт-Петербурге К/С 30101810900000000703 БИК 044030703

Компания «Life Electronics» занимается поставками электронных компонентов импортного и отечественного производства от производителей и со складов крупных дистрибьюторов Европы, Америки и Азии.

С конца 2013 года компания активно расширяет линейку поставок компонентов по направлению коаксиальный кабель, кварцевые генераторы и конденсаторы (керамические, пленочные, электролитические), за счёт заключения дистрибьюторских договоров

Мы предлагаем:

- *Конкурентоспособные цены и скидки постоянным клиентам.*
- *Специальные условия для постоянных клиентов.*
- *Подбор аналогов.*
- *Поставку компонентов в любых объемах, удовлетворяющих вашим потребностям.*

- *Приемлемые сроки поставки, возможна ускоренная поставка.*
- *Доставку товара в любую точку России и стран СНГ.*
- *Комплексную поставку.*
- *Работу по проектам и поставку образцов.*
- *Формирование склада под заказчика.*

- *Сертификаты соответствия на поставляемую продукцию (по желанию клиента).*
- *Тестирование поставляемой продукции.*
- *Поставку компонентов, требующих военную и космическую приемку.*
- *Входной контроль качества.*
- *Наличие сертификата ISO.*

В составе нашей компании организован Конструкторский отдел, призванный помогать разработчикам, и инженерам.

Конструкторский отдел помогает осуществить:

- *Регистрацию проекта у производителя компонентов.*
- *Техническую поддержку проекта.*
- *Защиту от снятия компонента с производства.*
- *Оценку стоимости проекта по компонентам.*
- *Изготовление тестовой платы монтаж и пусконаладочные работы.*

Тел: +7 (812) 336 43 04 (многоканальный)
Email: org@lifeelectronics.ru

www.lifeelectronics.ru