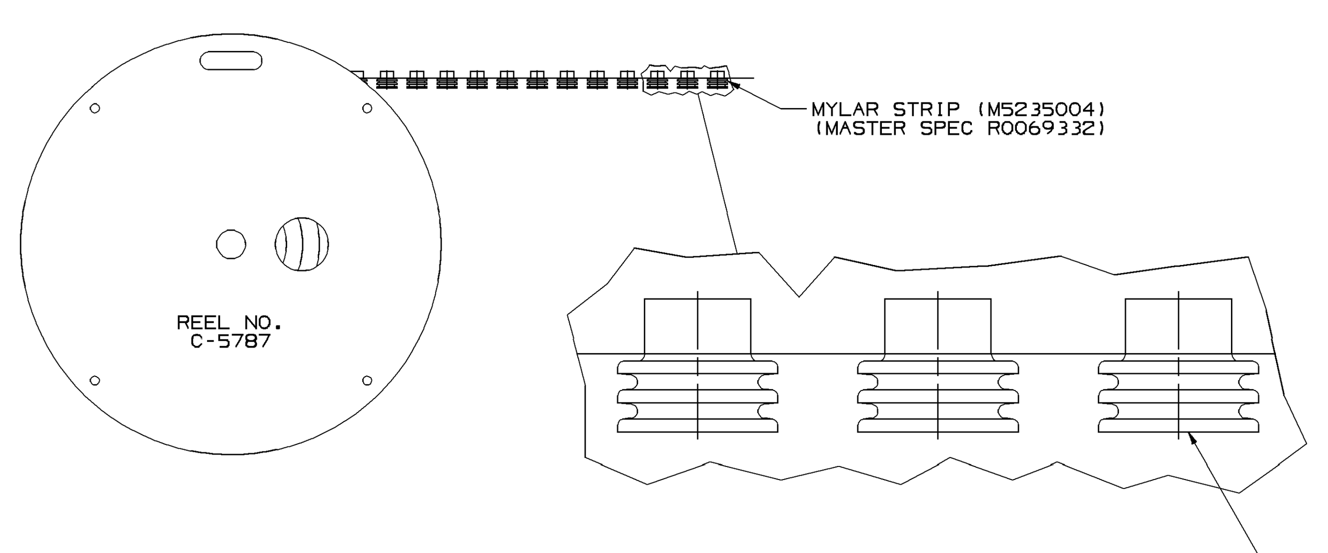

SEAL/MYLAR ASSEMBLY DETAIL

NOTES

1. THE MYLAR TAPE IS ONLY A CARRIER USED AS A PROCESS AID AND IS NOT A PART OF THE FINAL HARNESS ASSEMBLY.
2. WHEN PARTS ARE SHIPPED, THEY MUST BE PACKED IN PLASTIC BAGS OR SHIPPING CONTAINERS MUST BE LINED WITH PLASTIC LINERS. BAGS OR LINERS MUST BE SEALED TO AVOID ENTRY OF FOREIGN MATTER.

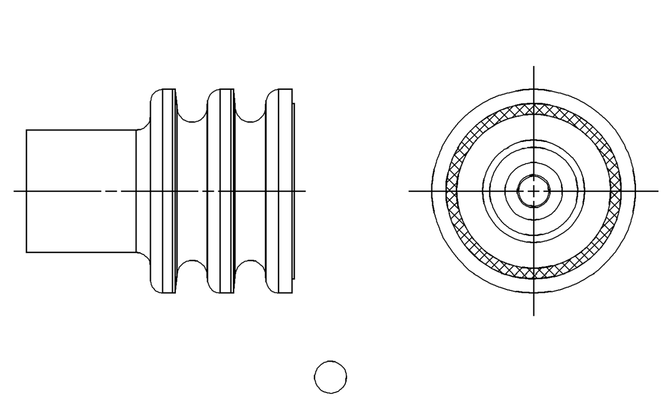

OPTIONAL CONSTRUCTION 1
(ANTI-STICK RING)

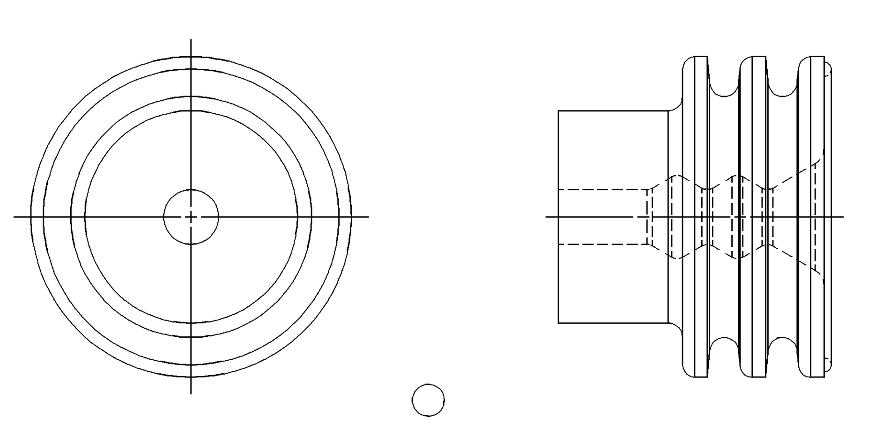

OPTIONAL CONSTRUCTION 2
THIS IS THE PREFERRED CONSTRUCTION FOR NEW TOOL BUILDS
(ANTI-STICK RING)

SYMBOL DEFINITION			MISSING SYMBOLS
A DIMENSION WITHOUT AN INSPECTION REPORT SYMBOL ( ) DOES NOT REQUIRE INSPECTION. IT MAY BE CONTROLLED ON THE INDIVIDUAL COMPONENT DRAWING.	TOTAL NO OF INSPECTIONS REQUIRED	5	NO MISSING SYMBOL NUMBER
	LAST NO. USED	5	

DWG STATUS DATE	STG	REV	N/P	CHG	ZONE	REVISION HISTORY	AUTH	DR	APVD 1	APVD 2
03DE99	R	001	-	-		ALL PARTS - REDRAWN TO PD	990009	EOV	CMP	RH
03DE99	R	002	-	-		15324973-76 & 15324979 - RELEASED	990005	EOV	CMP	RH
17MY00	R	003	-	-		15393249 - RELEASED	000005	MAC	MAC	MM
07NO00	R	004	-	-		15324973-76 & 15324979 - REVISED	202978	JLZ	EAR	JR
07NO00	R	005	-	-		15393249 - REVISED MYLAR & CABLE SEAL ASM COLUMN	204413	EAR	EAR	JR
19JA01	R	006	-	-		UPDATED PDM ATTRIBUTES	205150	JLZ	JLZ	JR
09JA01	R	007	-	-		15393249 - PM009216 WAS PM002196 AND "G" DIM WAS 5.75 +/_ 0.15	205774	MAC	MAC	TP
29MR01	R	008	-	-		15393249 - MAT'L SPEC WAS PM009216	207669	FMH	FMH	TP
06NO01	R	009	-	-		12048086 - UPDATED PDM ATTRIBUTES	215063	MRL	MRL	DLB
10FE03	R	10	-	-		15324974 AND 15324976 - UPDATED PDM ATTRIBUTES	236300	BRB	BRB	MLP
05AP04	R	11	-	-		12052925,12052924,15393249,15324979, 15324976,15324975,15324973,12186769, 12129926,12110213,12089678,12089441, 12084193,12048087,AND 12048086 - UPDATED MAT'L SPECS, REMOVED MAT'L SPEC NOTES, NOTE 9 WAS 10 AND REMOVED OLD NOTE 9, REMOVED "Ø A" DIM 2 PLCS AND "A" COLUMN FROM CHART,ADDED COLOR COLUM TO CHART	251238	BRB	BRB	MR
19NO04	R	12	-	-	-	REVISED CHART	261378	MLM	MLM	MR
23FE05	R	13	-	-		12048086,12048087,12084193,12089678, 12110213,12186769,12052924,12052925, 12124669,12089442 AND 12186770 ADDED RESTRICTED STATUS; 15324973-4976 AND 15324979 MATL SPEC WAS M3466; ADDED NOTES COLUMN TO CHART; NOTE 7 WAS 9, NOTE 8 WAS 7 AND NOTE 9 WAS 8; REMOVED DIM 'C' FROM TYPE 402 VIEW	265239	RH	RH	MR
10JN05	R	14	-	-		REVISED GRAPHICS	269180	GPS	JVM	MPR
17FE06	R	15	-	-		REVISED CHART	277502	MM	MM	MR
03MR06	R	16	-	-		15324973-76 & 15324979 - MAT'L SPEC WAS M3469	277946	HCG	JVM	MR
17AU06	R	17	-	-		15324975 - OBSOLETE	273517	CCV	AUG	MR
03OC06	R	18	-	-		ALL ACTIVE PARTS - ADDED SEALING RIBS VIEWS, OVERALL LENGTH LABEL, SEALING RIBS LABEL, ANTI-STICK RING OPTIONAL CONSTRUCTION 1 & 2 VIEWS AND DIMS (2 PLCS); 12084193 & 12124669 - REMOVED RESTRICTED, OPTIONAL CONSTRUCTION VIEWS, CONSTRUCTION LINE VIEWS, TYPES 404, 405 & 406 VIEWS AND COLUMNS C,F & G FROM CHART; DIM Ø3.45 WAS ØC, DIM Ø5.75 ±0.2 WAS ØG & DIM 7.5 WAS F, CABLE OD RANGE 1.2 - 1.7 WAS 1.29 - 1.7 AND EQUIVALENT CABLE SEAL COLUMN; 15324973-74, 15324976 & 15324979 - MAT'L SPEC M3469 WAS M3466 & ADDED ALTERNATE MAT'L SPEC M3466XXX	285225	JBD	FRG	MPR

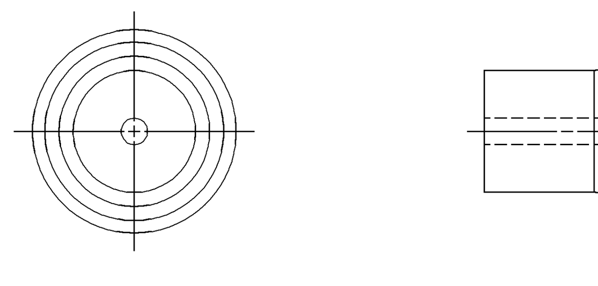

TYPE 402
SAME AS TYPE 401
EXCEPT AS SHOWN

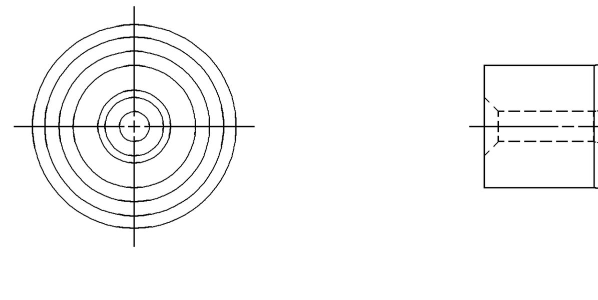

TYPE 403
SAME AS TYPE 401
EXCEPT AS SHOWN

(5) SEALING RIBS MUST BE FREE OF SINKS, VOIDS, KNIT LINES AND FLASH IN THE AREA SHOWN ALL AROUND PART.

SEE VPS A-121 FOR ADDITIONAL INFORMATION.

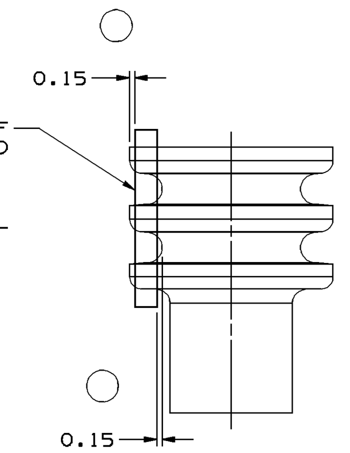

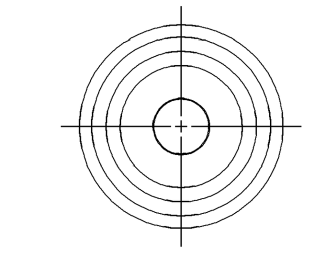

TYPE 401

(4) OVERALL LENGTH WILL INCREASE BY 0.2 MM (NOMINAL) IF OPTIONAL CONSTRUCTION 2 IS USED

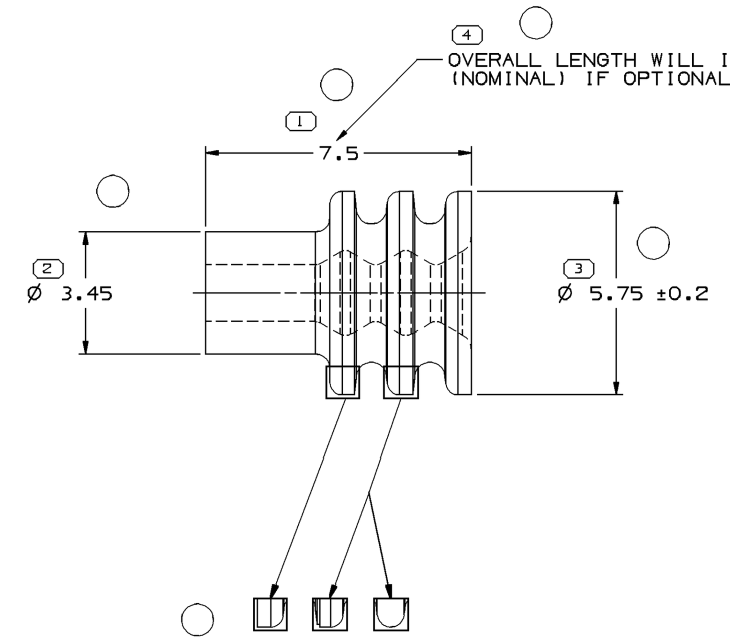

SEALING RIBS MAY DIFFER AS SHOWN

NOTES

1. UNLESS OTHERWISE SPECIFIED AND/OR INDICATED:

   DIMENSIONS ARE TO FACE OF VIEW SHOWN AND AUTOMATICALLY ROUNDED BY COMPUTER FOR INSPECTION (SEE MATH MODEL FOR PRECISE DIMENSIONS). FOR ALL OTHER DIMENSIONS NOT SHOWN BUT REQUIRED FOR TOOL BUILD, SEE MATH MODEL FOR PRECISE TOOL PATH DATA.

2. SEALING RIBS ARE IDENTICAL, EXCEPT AS SHOWN.
3. PARTS NOT MADE ON FLASHLESS MOLDS MUST BE DEFLASHED, WASHED AND DRIED AFTER MOLDING. WASHING SHOULD OCCUR WITHIN 12 HOURS AFTER MOLDING.
4. PARTS ARE TO BE PACKAGED IN SEALED PLASTIC BAGS. GROSS WEIGHT INCLUDING CARTON IS NOT TO EXCEED 34 POUNDS.
5. PARTS MUST BE MADE FROM VIRGIN MATERIAL ONLY.
6. TO IMPROVE SEAL PROCESSING ON SLIPPERY OR SMOOTH CABLE INSULATION, THE APPLICATION ENGINEER MAY SURFACE THE NEXT SMALLER SEAL SIZE P/N IN PLACE OF THE INDICATED SEAL FOR THE "CABLE O.D." LISTED IN THE CHART.
7. CABLE SEAL PART NUMBER DESIGNATED EXCLUSIVELY FOR SEALS PRODUCED FROM QSR TOOLING. PART NUMBER RECOMMENDED FOR AUTOMATED ABS APPLICATIONS. ALL OTHER APPLICATIONS SHOULD USE 12089678.
8. DESIGNED FOR 0.8 MM^2 SOLID CORE DRAIN WIRE Ø1.002 ±0.007
9. PARTS MADE OF FLUOROSILICONE MUST BE POST-CURED FOR 4 HRS AT 400°F.

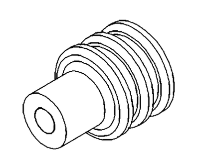

VIEW SCALE DOES NOT REFLECT ACTUAL PART SIZE

PART NO	REV	N/P	STATUS	PART NO	REV	N/P	STATUS	MATERIAL SPECIFICATION	COLOR (REF ONLY)	ALTERNATE MATERIAL SPECIFICATION	TYPE	CABLE O.D. ±0.05 SEE NOTE 6	CAVITY I.D.	EQUIVALENT CABLE SEAL	NOTES
				15393249	01	AF		M4358007	GRN	-	403	2.15-1.6	5.2	-	SEE NOTE 9
				15324979	01	AF		M3469003	GRA	M3466003	403	2.15-1.6	5.2	12186769	-
				15324976	01	AF		M3469011	WHT	M3466011	403	2.15-1.6	5.2	12089678	-
				15324975	01	AF	OBSOLETE	M3466038	TAN	-	402	1.009-0.995	5.2	-	SEE NOTE 8
				15324974	01	AG		M3469008	BLU	M3466008	403	1.7-1.2	5.2	12048087	-
				15324973	01	AF		M3469037	DK RD	M3466037	401	2.85-2.03	5.2	12048086	-
12186770	B3	-	RESTRICTED	12186769	B6	-	RESTRICTED	M2261003	GRA	-	403	2.15-1.6	5.2	15324979	SEE NOTE 7
12146011	A	-	OBSOLETE	12129926	B4	-		M4358005	ORN	-	403	1.7-1.29	5.2	-	SEE NOTE 9
				12110213	B5	-	RESTRICTED	M4398008	BLU	-	401	2.65-1.85	5.2	-	-
12089442	B3	-	RESTRICTED	12089678	A6	-	RESTRICTED	M3471011	WHT	M2261011	403	2.15-1.6	5.2	15324976	-
				12089441	B	-	OBSOLETE	M2261006	YEL	-	403	2.15-1.6	5.2	-	-
12124669	A3	-	-	12084193	A5	-	-	M2261029	TAN	-	402	1.009-0.995	5.2	-	SEE NOTE 8
12052925	A4	-	RESTRICTED	12048087	02	AC	RESTRICTED	M3471008	BLU	M2261008	403	1.7-1.29	5.2	15324974	-
12052924	A4	-	RESTRICTED	12048086	02	AC	RESTRICTED	M3471037	DK RD	M2261019	401	2.85-2.03	5.2	15324973	-
MYLAR & CABLE SEAL ASM				CABLE SEAL											

DRAWING NUMBER 12010295
SIZE A1x3 | SCALE 10:1 | FRAME NO 2 OF 2 | SHEET NO 4 OF | STG R | REV 18 | N/P -

(3) PROCESS SENSITIVE DIMENSION

DIMENSIONS ENCLOSED IN ( ) INDICATE REFERENCE DIMENSIONS AND NO TOLERANCE LIMITS ARE ESTABLISHED

DIMENSIONAL RANGE (MM) — CHART E1

FROM	>0	>20	>30	>70	>100	>150	>200	>250	>300
TO	20	30	70	100	150	200	250	300	400
TOLERANCE UNLESS OTHERWISE SPECIFIED	±0.15	±0.2	±0.3	±0.4	±0.5	±0.6	±0.8	±1	±1.2

ANGULAR TOLERANCE ±2°

DWG TYPE: PART DRAWING
STYLE
VOLUME (CM³)
DISTR CODE: D

UNLESS OTHERWISE SPECIFIED
THIS DOCUMENT IS IN ACCORDANCE WITH ASME Y14.5M-1994 AS AMENDED BY THE GM GLOBAL DIMENSIONING AND TOLERANCING ADDENDUM - 1997. ALL GEOMETRIC TOLERANCES AND RELATED DATUMS APPLY RFS. RULE #1(PERFECT FORM AT MMC) DOES NOT APPLY WHEN RELATIONSHIP BETWEEN FEATURES IS ESTABLISHED BY ORIENTATION OR LOCATION TOLERANCES. SEPARATE POSITION CALLOUTS MAY BE GAGED SEPARATELY, REGARDLESS OF DATUM REFERENCE.
ALL DIMENSIONS ARE IN MILLIMETERS

REFERENCE

THIRD ANGLE PROJECTION
DO NOT SCALE
USE MATH DATA
CAD UNIGRAPHICS

DELPHI
DELPHI PACKARD ELECTRIC SYSTEMS
WARREN, OH

		DATE
DR		
APVD1	J. HOUGELMAN	13JA89
APVD2	T. MUDREY	26JA89
APVD3	A. HERMANN	31JA89
APVD4		
APVD5		

SUBSTANCES OF CONCERN AND RECYCLED CONTENT PER DELPHI 10949001

MATERIAL: SEE CHART

DRAWING NAME: TAXI SEAL CBL 1W M/P

DRAWING NUMBER: 12010295

SIZE	SCALE	FRAME NO	SHEET NO	STG	REV	N/P
A1x3	10:1	1 OF 2	4 OF	R	18	-

12010295

ООО «ЛайфЭлектроникс» “LifeElectronics” LLC

ИНН 7805602321 КПП 780501001 Р/С 40702810122510004610 ФАКБ "АБСОЛЮТ БАНК" (ЗАО) в г.Санкт-Петербурге К/С 30101810900000000703 БИК 044030703

Компания «Life Electronics» занимается поставками электронных компонентов импортного и отечественного производства от производителей и со складов крупных дистрибьюторов Европы, Америки и Азии.

С конца 2013 года компания активно расширяет линейку поставок компонентов по направлению коаксиальный кабель, кварцевые генераторы и конденсаторы (керамические, пленочные, электролитические), за счёт заключения дистрибьюторских договоров

Мы предлагаем:

- *Конкурентоспособные цены и скидки постоянным клиентам.*
- *Специальные условия для постоянных клиентов.*
- *Подбор аналогов.*
- *Поставку компонентов в любых объемах, удовлетворяющих вашим потребностям.*

- *Приемлемые сроки поставки, возможна ускоренная поставка.*
- *Доставку товара в любую точку России и стран СНГ.*
- *Комплексную поставку.*
- *Работу по проектам и поставку образцов.*
- *Формирование склада под заказчика.*

- *Сертификаты соответствия на поставляемую продукцию (по желанию клиента).*
- *Тестирование поставляемой продукции.*
- *Поставку компонентов, требующих военную и космическую приемку.*
- *Входной контроль качества.*
- *Наличие сертификата ISO.*

В составе нашей компании организован Конструкторский отдел, призванный помогать разработчикам, и инженерам.

Конструкторский отдел помогает осуществить:

- *Регистрацию проекта у производителя компонентов.*
- *Техническую поддержку проекта.*
- *Защиту от снятия компонента с производства.*
- *Оценку стоимости проекта по компонентам.*
- *Изготовление тестовой платы монтаж и пусконаладочные работы.*

Тел: +7 (812) 336 43 04 (многоканальный)
Email: org@lifeelectronics.ru

www.lifeelectronics.ru