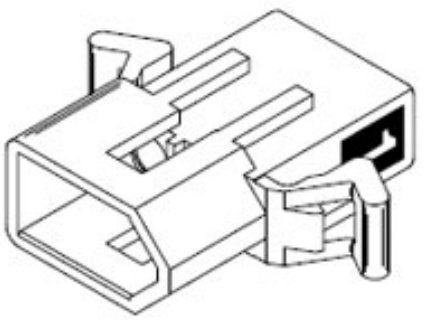
This document was generated on 06/07/2010

**PLEASE CHECK WWW.MOLEX.COM FOR LATEST PART INFORMATION**

**Part Number:** 0003092021
**Status:** Active
**Overview:** standard_093
**Description:** 2.36mm (.093") Diameter Standard .093" Pin and Socket Plug Housing, 2 Circuits, With Standard Mounting Ears



*Series image - Reference only*

**Documents:**

- 3D Model
- Packaging Specification (PDF)
- Drawing (PDF)
- Product Specification PS-02-09 (PDF)
- Product Specification PS-42477 (PDF)
- Product Specification PS-43660-9999 (PDF)
- RoHS Certificate of Compliance (PDF)

## General

| | |
|---|---|
| Product Family | Crimp Housings |
| Series | 1545 |
| Comments | Polarized to Mating Part, 17.0A max. can be achieved when housing is used with 42477 or 42478 terminals |
| MolexKits | Yes |
| Overview | standard_093 |
| Product Name | Standard .093" |

## Physical

| | |
|---|---|
| Breakaway | No |
| Circuits (maximum) | 2 |
| Circuits Detail | 1x2 |
| Color - Resin | Natural |
| Gender | Dual |
| Glow-Wire Compliant | No |
| Keying to Mating Part | None |
| Lock to Mating Part | Yes |
| Material - Resin | Nylon |
| Number of Rows | 1 |
| Packaging Type | Bag |
| Panel Mount | Yes |
| Pitch - Mating Interface (in) | 0.248 In |
| Pitch - Mating Interface (mm) | 6.30 mm |
| Stackable | No |
| Temperature Range - Operating | -40°C to +105°C |

## Electrical

| | |
|---|---|
| Current - Maximum per Contact | 14A |

## Material Info

| | |
|---|---|
| Old Part Number | 1545-P |

## Reference - Drawing Numbers

| | |
|---|---|
| Packaging Specification | PK-1545-001 |
| Product Specification | PS-02-09, PS-42477, PS-43660-9999 |
| Sales Drawing | SD-1545-* |

**EU RoHS**
**ELV and RoHS Compliant**
**REACH SVHC**
**Contains SVHC: No**
**Halogen-Free Status**
**Not Reviewed**

**China RoHS**

**Need more information on product environmental compliance?**

Email productcompliance@molex.com
For a multiple part number RoHS Certificate of Compliance, click here

Please visit the Contact Us section for any non-product compliance questions.

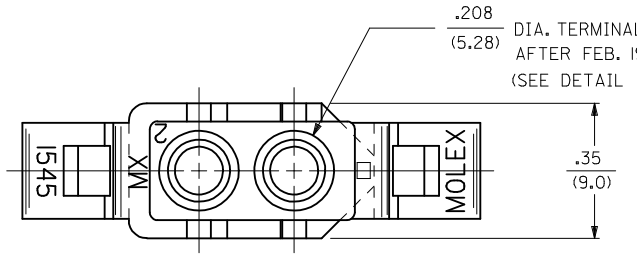
**Search Parts in this Series**
1545Series

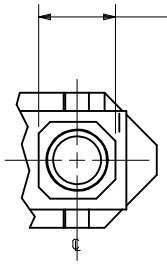
**Mates With**
42191 Pin and Socket Receptacle

**Use With**
1189 Crimp Terminals, 1190 Crimp Terminals, 1376 Male PC Tail Terminals, 1377 Female PC Tail Terminals, 1380 Male Crimp Terminals, 1381 Female Crimp Terminals, 1433 Crimp Terminals, 1434 Male Crimp Terminals, 1973 Male Crimp Terminals

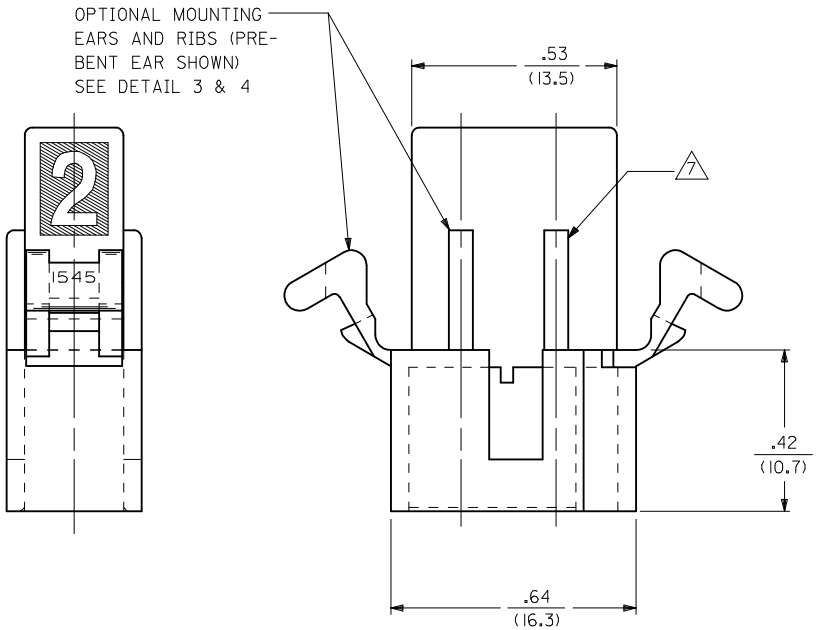
This document was generated on 06/07/2010

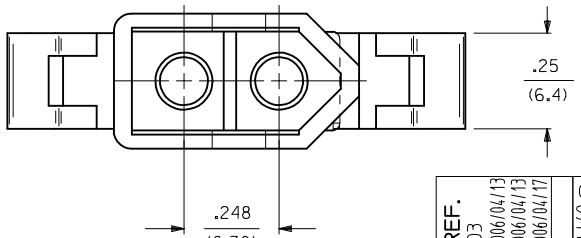
**PLEASE CHECK WWW.MOLEX.COM FOR LATEST PART INFORMATION**

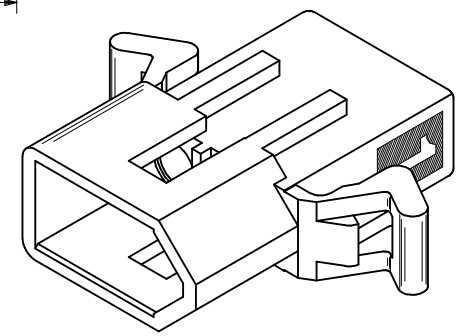



DETAIL "I"



| | | | | | | | | | | | |
|---|---|---|---|---|---|---|---|---|---|---|---|
| UPDATE NOTE REF. | | | | QUALITY SYMBOLS | GENERAL TOLERANCES (UNLESS SPECIFIED) | | | DIMENSION STYLE | SCALE | DESIGN UNITS | THIRD ANGLE PROJECTION |
| EC NO: UCP2006-2303 | 2006/04/13 | | | ▼=0 | | mm | INCH | IN/MM | 4:1 | INCH | |
| DRWN:PRIDDER | 2006/04/13 | | | ▽(C)=0 | 4 PLACES | ± --- | ± --- | DRAWN BY / DATE | | | TITLE |
| CHKD:AELHAG | 2006/04/17 | | | | 3 PLACES | ± --- | ± .010 | GEP 8/9/88 | | | .093/(2.36) HOUSING, PLUG & RECEPTACLE, 2 CKT., .248/(6.30) CTR. |
| APPR:FSMITH | | | | | 2 PLACES | ± 0.25 | ± .014 | CHECKED BY / DATE | | | |
| DESCRIPTION | | | | | 1 PLACE | ± 0.35 | ± --- | RW 8/9/88 | | | |
| U1 | | | REV | | ANGULAR ±1/2° | | | APPROVED BY / DATE | | | molex MOLEX INCORPORATED |
| | | | | DRAFT WHERE APPLICABLE MUST REMAIN WITHIN DIMENSIONS | | | | RAS 8/9/88 | | | |
| | | | | | | | | MATERIAL NO. | | DOCUMENT NO. | SHEET NO. |
| | | | | | | | | SEE CHART | | SD-1545-* | 1 OF 3 |
| | | | | | | | | SIZE C | THIS DRAWING CONTAINS INFORMATION THAT IS PROPRIETARY TO MOLEX INCORPORATED AND SHOULD NOT BE USED WITHOUT WRITTEN PERMISSION | | |

| PLUG | |
|---|---|
| PART NO. | ENG. NO. |
| 03-09-2021 | 1545-P |
| 03-09-2022 | 1545-P1 |
| 03-09-7021 | 1545-PBK |
| 03-09-7022 | 1545-P1BK |
| 03-09-2023 | 1545-P2 |
| 03-09-7024 | 1545-P1RD |
| 03-09-7023 | 1545-P1BU |
| 50-36-1686 | 1545-P1-1 |

| RECEPTACLE | |
|---|---|
| PART NO. | ENG. NO. |
| 03-09-6021 | 1545-R3BK |
| 03-09-6023 | 1545-R3RD |
| 03-09-6024 | 1545-R3BU |
| 03-09-1022 | 1545-R1 |
| 03-09-1023 | 1545-R2 |
| 03-09-6025 | 1545-R1BU |
| 03-09-1027 | 1545-R3 |
| 50-36-1685 | 1545-R1-1 |

## LEGEND : PLUG

1545-P***-*

OPTIONS:
BLANK = WITH STD. EARS
1 = WITHOUT EARS
2 = WITH PREBENT EARS

COLOR: BLANK=NATURAL COLOR
AM=AMBER BK=BLACK BU=BLUE
BN=BROWN GY=GRAY GN=GREEN
OR=ORANGE RD=RED YW=YELLOW

BLANK = MATERIAL CODE A
1 = MATERIAL CODE B

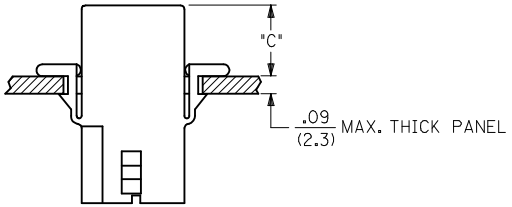
## LEGEND : RECEPTACLE

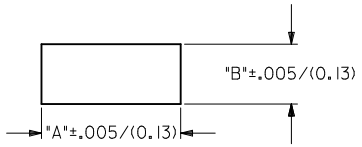
1545-R***-*

BLANK = WITH STD. EARS & RAMPS
1 = WITHOUT EARS, WITH RAMPS
2 = WITHOUT EARS, WITHOUT RAMPS
3 = WITH PREBENT EARS & RAMPS

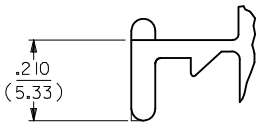
COLOR: BLANK=NATURAL COLOR
AM=AMBER BK=BLACK BU=BLUE
BN=BROWN GY=GRAY GN=GREEN
OR=ORANGE RD=RED YW=YELLOW

BLANK = MATERIAL CODE A
1 = MATERIAL CODE B

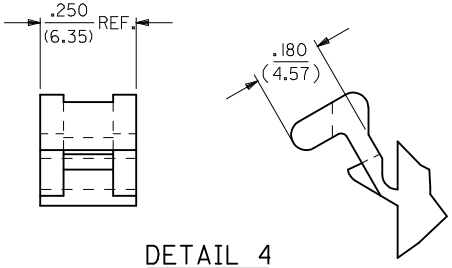



RECOMMENDED PANEL OPENING
(SCALE 2:1)




DETAIL 3
.093/(2.36) STANDARD MOUNTING EAR
(SCALE 4:1)




DETAIL 4
.093/(2.36) PREBENT MOUNTING EAR
(SCALE 4:1)

NOTES:

1. MATERIAL: - A = NYLON, PA66, 94V-2. COLOR: SEE LEGEND.
   B = UL94V-0, PA6 NYLON, IEC 60335-1, 4TH EDITION GLOW WIRE CAPABLE.
2. FINISH: NONE.
3. PRODUCT SPECIFICATION: PS-02-09.
4. PACKAGING INFORMATION: PK-1545-001
5. .97/(24.6) REF. FOR TOOLS BUILT PRIOR TO FEB. 1985.
6. 1.00/(25.4) REF. FOR TOOLS BUILT PRIOR TO FEB. 1985.
7. RIBS ARE PRESENT ONLY ON PARTS WITH MOUNTING EARS.
8. EACH TERMINAL POCKET WILL ACCEPT UP TO:
   (2) #18 AWG WIRES HAVING 1/32" THK. INSULATION OR
   (1) #16 AWG WIRE HAVING 1/16" THK. INSULATION OR
   (1) #16 AWG & (1) 18 AWG WIRE HAVING 1/32" THK. INSULATION .
9. CIRCUIT I.D. NUMBERS ON SIDE OF HOUSING APPEAR ON PARTS FROM TOOLS BUILT AFTER 11/25/91.
10. PARTS CONFORM TO CLASS 'B' REQUIREMENTS OF COSMETIC SPECIFICATION PS-45499-002 EXCEPT MATERIAL OPTION 'B' MEETS CLASS 'C' REQUIREMENTS FOR SINK AND DISCOLORATION.

| HOUSING | DIM. "A" | DIM. "B" | DIM. "C" (PREBENT) | DIM. "C" (STD. EAR) |
|---|---|---|---|---|
| PLUG | .800/(20.32) | .375/(9.53) | .40/(10.2) | .39/(9.9) |
| RECEPTACLE | .725/(18.42) | .312/(7.92) | .41/(10.4) | .40/(10.2) |

ADD MAT'L & P/N'S
EC NO: UCP2007-2366 2007/05/25
DRWN: AELHAG 2007/06/01
CHKD: LSCHMIDT 2007/06/04
APPR: FSMITH
DESCRIPTION
V
REV

QUALITY SYMBOLS
▼=0
Ⓒ▽=0

GENERAL TOLERANCES (UNLESS SPECIFIED)

| | mm | INCH |
|---|---|---|
| 4 PLACES | ± --- | ± --- |
| 3 PLACES | ± --- | ± .010 |
| 2 PLACES | ± 0.25 | ± .014 |
| 1 PLACE | ± 0.35 | ± --- |
| ANGULAR ± 1 ° | | |

DRAFT WHERE APPLICABLE MUST REMAIN WITHIN DIMENSIONS

| | |
|---|---|
| DIMENSION STYLE | IN/MM |
| SCALE | 2:1 |
| DESIGN UNITS | INCH |
| | THIRD ANGLE PROJECTION |
| DRAWN BY / DATE | GEP 8/9/88 |
| CHECKED BY / DATE | RW 8/9/88 |
| APPROVED BY / DATE | RAS 8/9/88 |
| TITLE | .093(2.36) HOUSING, PLUG & RECEPTACLE, 2 CKT., .248/(6.30) CTR. |
| | MOLEX INCORPORATED |
| MATERIAL NO. | SEE CHART |
| DOCUMENT NO. | SD-1545-* |
| SHEET NO. | 3 OF 3 |
| SIZE | C |

THIS DRAWING CONTAINS INFORMATION THAT IS PROPRIETARY TO MOLEX INCORPORATED AND SHOULD NOT BE USED WITHOUT WRITTEN PERMISSION

LifeElectronics
Живое партнерство

**ООО «ЛайфЭлектроникс»** **“LifeElectronics” LLC**

*ИНН 7805602321 КПП 780501001 Р/С 40702810122510004610 ФАКБ "АБСОЛЮТ БАНК" (ЗАО) в г.Санкт-Петербурге К/С 30101810900000000703 БИК 044030703*

*Компания «Life Electronics» занимается поставками электронных компонентов импортного и отечественного производства от производителей и со складов крупных дистрибьюторов Европы, Америки и Азии.*

*С конца 2013 года компания активно расширяет линейку поставок компонентов по направлению коаксиальный кабель, кварцевые генераторы и конденсаторы (керамические, пленочные, электролитические), за счёт заключения дистрибьюторских договоров*

*Мы предлагаем:*

- *Конкурентоспособные цены и скидки постоянным клиентам.*
- *Специальные условия для постоянных клиентов.*
- *Подбор аналогов.*
- *Поставку компонентов в любых объемах, удовлетворяющих вашим потребностям.*

- *Приемлемые сроки поставки, возможна ускоренная поставка.*
- *Доставку товара в любую точку России и стран СНГ.*
- *Комплексную поставку.*
- *Работу по проектам и поставку образцов.*
- *Формирование склада под заказчика.*

- *Сертификаты соответствия на поставляемую продукцию (по желанию клиента).*
- *Тестирование поставляемой продукции.*
- *Поставку компонентов, требующих военную и космическую приемку.*
- *Входной контроль качества.*
- *Наличие сертификата ISO.*

*В составе нашей компании организован Конструкторский отдел, призванный помогать разработчикам, и инженерам.*

*Конструкторский отдел помогает осуществить:*

- *Регистрацию проекта у производителя компонентов.*
- *Техническую поддержку проекта.*
- *Защиту от снятия компонента с производства.*
- *Оценку стоимости проекта по компонентам.*
- *Изготовление тестовой платы монтаж и пусконаладочные работы.*

*Тел: +7 (812) 336 43 04 (многоканальный)*
*Email: org@lifeelectronics.ru*

***www.lifeelectronics.ru***