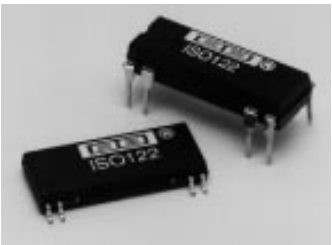

ISO122

Precision Lowest Cost ISOLATION AMPLIFIER

FEATURES

- 100% TESTED FOR HIGH-VOLTAGE BREAKDOWN
- RATED 1500Vrms
- HIGH IMR: 140dB at 60Hz
- BIPOLAR OPERATION: $V_O = \pm 10V$
- 16-PIN PLASTIC DIP AND 28-LEAD SOIC
- EASE OF USE: Fixed Unity Gain Configuration
- 0.020% max NONLINEARITY
- ±4.5V to ±18V SUPPLY RANGE

APPLICATIONS

- INDUSTRIAL PROCESS CONTROL: Transducer Isolator, Isolator for Thermocouples, RTDs, Pressure Bridges, and Flow Meters, 4mA to 20mA Loop Isolation
- GROUND LOOP ELIMINATION
- MOTOR AND SCR CONTROL
- POWER MONITORING
- PC-BASED DATA ACQUISITION
- TEST EQUIPMENT

DESCRIPTION

The ISO122 is a precision isolation amplifier incorporating a novel duty cycle modulation-demodulation technique. The signal is transmitted digitally across a 2pF differential capacitive barrier. With digital modulation the barrier characteristics do not affect signal integrity, resulting in excellent reliability and good high frequency transient immunity across the barrier. Both barrier capacitors are imbedded in the plastic body of the package.

The ISO122 is easy to use. No external components are required for operation. The key specifications are 0.020% max nonlinearity, 50kHz signal bandwidth, and 200µV/°C V_{OS} drift. A power supply range of ±4.5V to ±18V and quiescent currents of ±5.0mA on V_{S1} and ±5.5mA on V_{S2} make these amplifiers ideal for a wide range of applications.

The ISO122 is available in 16-pin plastic DIP and 28-lead plastic surface mount packages.

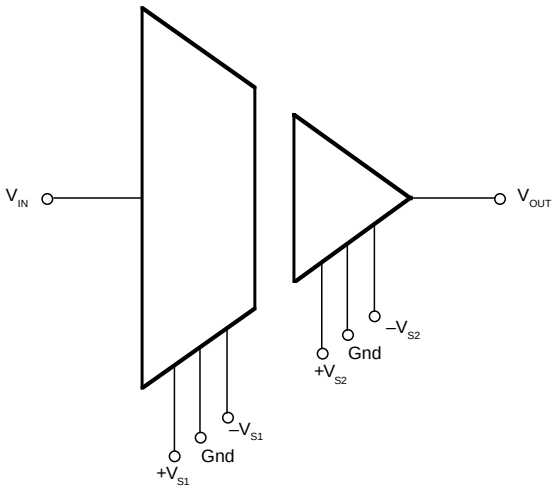

International Airport Industrial Park • Mailing Address: PO Box 11400 • Tucson, AZ 85734 • Street Address: 6730 S. Tucson Blvd. • Tucson, AZ 85706
Tel: (520) 746-1111 • Twx: 910-952-1111 • Cable: BBRCORP • Telex: 066-6491 • FAX: (520) 889-1510 • Immediate Product Info: (800) 548-6132

©1989 Burr-Brown Corporation
PDS-857F
Printed in U.S.A. November, 1993
SBOS160

SPECIFICATIONS

At T_A = +25°C , V_{S1} = V_{S2} = ±15V, and R_L = 2kΩ unless otherwise noted.

		ISO122P/U			ISO122JP/JU			
PARAMETER	**CONDITIONS**	**MIN**	**TYP**	**MAX**	**MIN**	**TYP**	**MAX**	**UNITS**
ISOLATION								
Voltage Rated Continuous AC 60Hz		1500			*			VAC
100% Test (1)	1s, 5pc PD	2400			*			VAC
Isolation Mode Rejection	60Hz		140			*		dB
Barrier Impedance			10^{14} || 2			*		Ω || pF
Leakage Current at 60Hz	V_{ISO} = 240Vrms		0.18	0.5		*	*	µArms
GAIN	V_O = ±10V							
Nominal Gain			1			*		V/V
Gain Error			±0.05	±0.50		*	*	%FSR
Gain vs Temperature			±10			*		ppm/°C
Nonlinearity(2)			±0.016	±0.020		±0.025	±0.050	%FSR
INPUT OFFSET VOLTAGE								
Initial Offset			±20	±50		*	*	mV
vs Temperature			±200			*		µV/°C
vs Supply			±2			*		mV/V
Noise			4			*		µV/√Hz
INPUT								
Voltage Range		±10	±12.5		*	*		V
Resistance			200			*		kΩ
OUTPUT								
Voltage Range		±10	±12.5		*	*		V
Current Drive		±5	±15		*	*		mA
Capacitive Load Drive			0.1			*		µF
Ripple Voltage(3)			20			*		mVp-p
FREQUENCY RESPONSE								
Small Signal Bandwidth			50			*		kHz
Slew Rate			2			*		V/µs
Settling Time	V_O = ±10V							
0.1%			50			*		µs
0.01%			350			*		µs
Overload Recover Time			150			*		µs
POWER SUPPLIES								
Rated Voltage			±15			*		V
Voltage Range		±4.5		±18	*		*	V
Quiescent Current: V_{S1}			±5.0	±7.0		*	*	mA
V_{S2}			±5.5	±7.0		*	*	mA
TEMPERATURE RANGE								
Specification		–25		+85	*		*	°C
Operating		–25		+85	*		*	°C
Storage		–40		+85	*		*	°C
θ_{JA}			100			*		°C/W
θ_{JC}			65			*		°C/W

* Specification same as ISO122P/U.

NOTES: (1) Tested at 1.6 X rated, fail on 5pC partial discharge. (2) Nonlinearity is the peak deviation of the output voltage from the best-fit straight line. It is expressed as the ratio of deviation to FSR. (3) Ripple frequency is at carrier frequency (500kHz).

The information provided herein is believed to be reliable; however, BURR-BROWN assumes no responsibility for inaccuracies or omissions. BURR-BROWN assumes no responsibility for the use of this information, and all use of such information shall be entirely at the user's own risk. Prices and specifications are subject to change without notice. No patent rights or licenses to any of the circuits described herein are implied or granted to any third party. BURR-BROWN does not authorize or warrant any BURR-BROWN product for use in life support devices and/or systems.

CONNECTION DIAGRAM

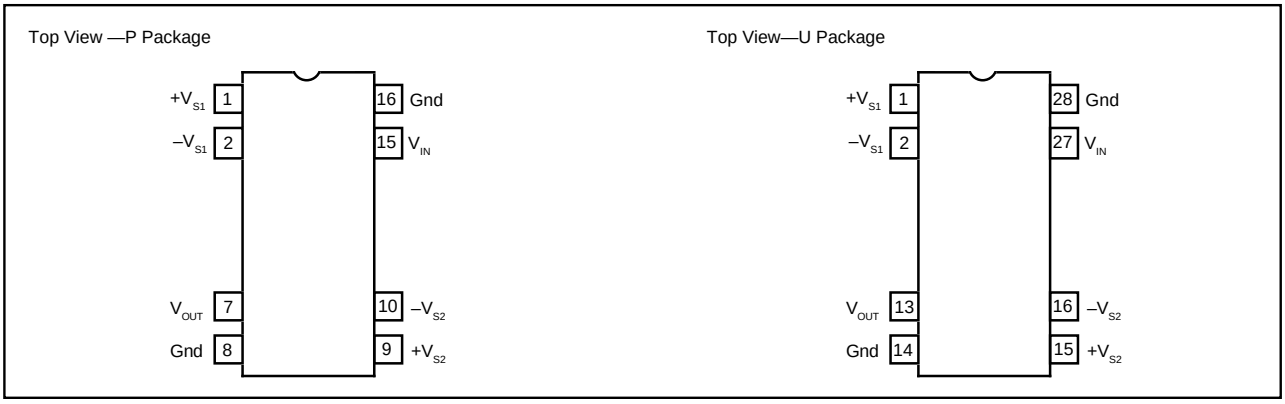

PACKAGE INFORMATION[1]

MODEL	PACKAGE	PACKAGE DRAWING NUMBER
ISO122P	16-Pin Plastic DIP	238
ISO122JP	16-Pin Plastic DIP	238
ISO122U	28-Pin Plastic SOIC	217-1
ISO122JU	28-Pin Plastic SOIC	217-1

NOTE: (1) For detailed drawing and dimension table, please see end of data sheet, or Appendix D of Burr-Brown IC Data Book.

ABSOLUTE MAXIMUM RATINGS

Supply Voltage	±18V
V_{IN}	±100V
Continuous Isolation Voltage	1500Vrms
Junction Temperature	+150°C
Storage Temperature	+85°C
Lead Temperature (soldering, 10s)	+300°C
Output Short to Common	Continuous

ORDERING INFORMATION

MODEL	PACKAGE	NONLINEARITY MAX %FSR
ISO122P	Plastic DIP	±0.020
ISO122JP	Plastic DIP	±0.050
ISO122U	Plastic SOIC	±0.020
ISO122JU	Plastic SOIC	±0.050

TYPICAL PERFORMANCE CURVES

T_A = +25°C, V_S = ±15V unless otherwise noted.

SINE RESPONSE
(f = 2kHz)

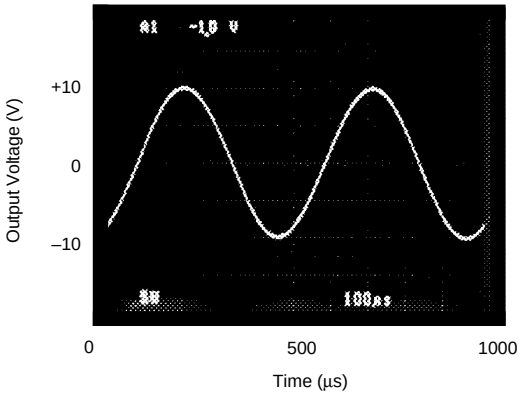

SINE RESPONSE
(f = 20kHz)

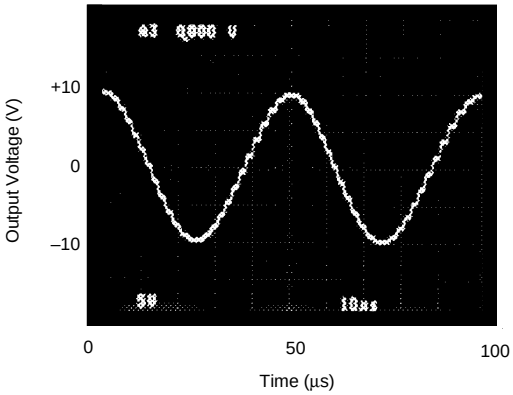

STEP RESPONSE

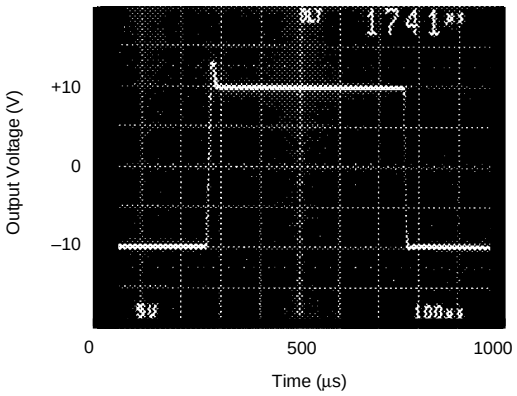

STEP RESPONSE

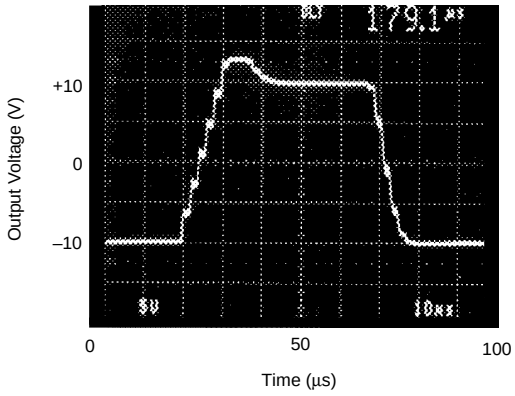

ISOLATION VOLTAGE
vs FREQUENCY

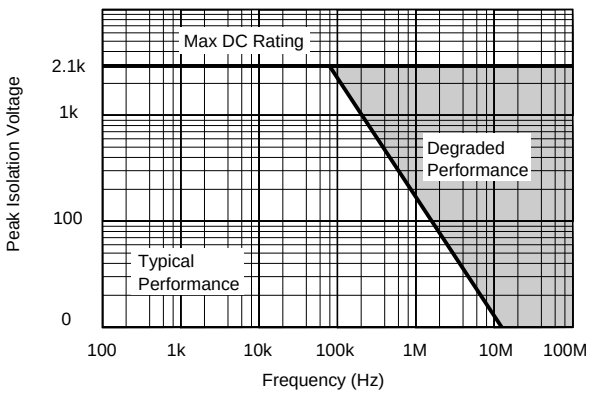

IMR vs FREQUENCY

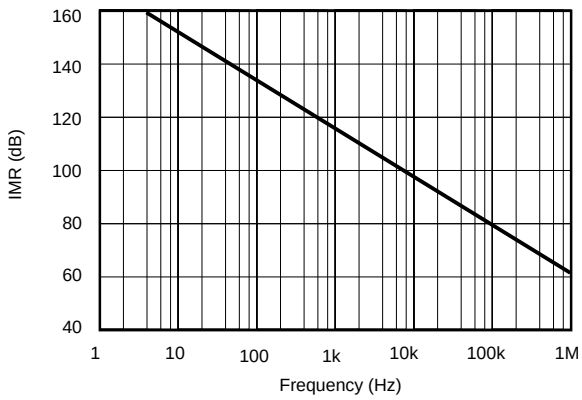

TYPICAL PERFORMANCE CURVES

T_A = +25°C, V_S = ±15V unless otherwise noted.

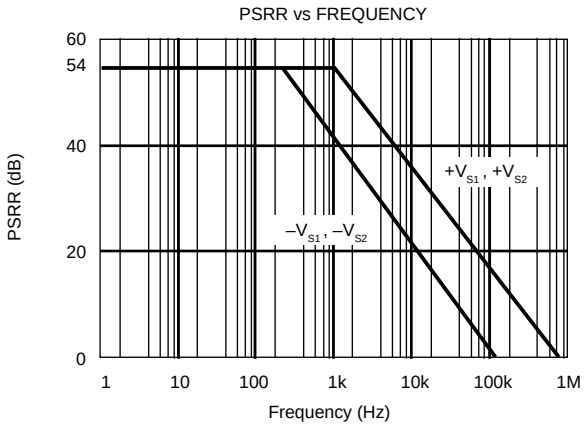

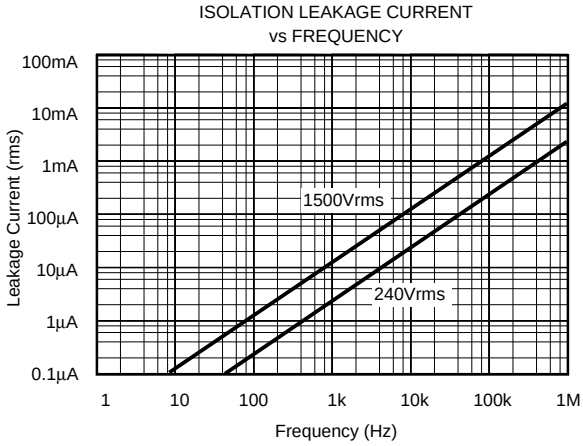

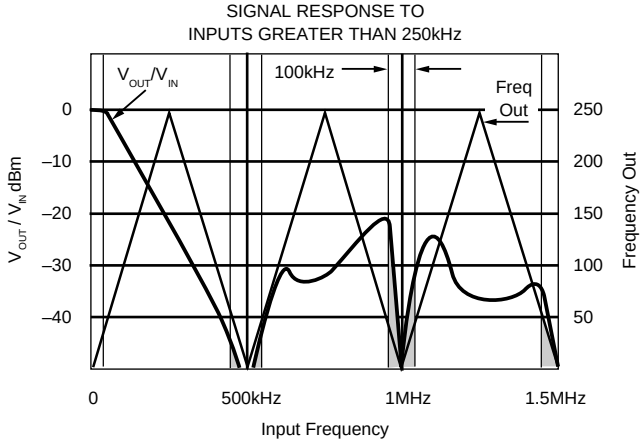

(NOTE: Shaded area shows aliasing frequencies that cannot be removed by a low-pass filter at the output.)

THEORY OF OPERATION

The ISO122 isolation amplifier uses an input and an output section galvanically isolated by matched 1pF isolating capacitors built into the plastic package. The input is duty-cycle modulated and transmitted digitally across the barrier. The output section receives the modulated signal, converts it back to an analog voltage and removes the ripple component inherent in the demodulation. Input and output sections are fabricated, then laser trimmed for exceptional circuitry matching common to both input and output sections. The sections are then mounted on opposite ends of the package with the isolating capacitors mounted between the two sections. The transistor count of the ISO122 is 250 transistors.

MODULATOR

An input amplifier (A1, Figure 1) integrates the difference between the input current (V_{IN}/200kΩ) and a switched ±100µA current source. This current source is implemented by a switchable 200µA source and a fixed 100µA current sink. To understand the basic operation of the modulator, assume that V_{IN} = 0.0V. The integrator will ramp in one direction until the comparator threshold is exceeded. The comparator and sense amp will force the current source to switch; the resultant signal is a triangular waveform with a 50% duty cycle. The internal oscillator forces the current source to switch at 500kHz. The resultant capacitor drive is a complementary duty-cycle modulation square wave.

DEMODULATOR

The sense amplifier detects the signal transitions across the capacitive barrier and drives a switched current source into integrator A2. The output stage balances the duty-cycle modulated current against the feedback current through the 200kΩ feedback resistor, resulting in an average value at the V_{OUT} pin equal to V_{IN}. The sample and hold amplifiers in the output feedback loop serve to remove undesired ripple voltages inherent in the demodulation process.

BASIC OPERATION

SIGNAL AND SUPPLY CONNECTIONS

Each power supply pin should be bypassed with 1µF tantalum capacitors located as close to the amplifier as possible. The internal frequency of the modulator/demodulator is set at 500kHz by an internal oscillator. Therefore, if it is desired to minimize any feedthrough noise (beat frequencies) from a DC/DC converter, use a π filter on the supplies (see Figure 4). ISO122 output has a 500kHz ripple of 20mV, which can be removed with a simple two pole low-pass filter with a 100kHz cutoff using a low cost op amp. See Figure 4.

The input to the modulator is a current (set by the 200kΩ integrator input resistor) that makes it possible to have an input voltage greater than the input supplies, as long as the output supply is at least ±15V. It is therefore possible when using an unregulated DC/DC converter to minimize PSR related output errors with ±5V voltage regulators on the isolated side and still get the full ±10V input and output swing. An example of this application is shown in Figure 10.

CARRIER FREQUENCY CONSIDERATIONS

The ISO122 amplifier transmits the signal across the isolation barrier by a 500kHz duty cycle modulation technique. For input signals having frequencies below 250kHz, this system works like any linear amplifier. But for frequencies above 250kHz, the behavior is similar to that of a sampling amplifier. The signal response to inputs greater than 250kHz

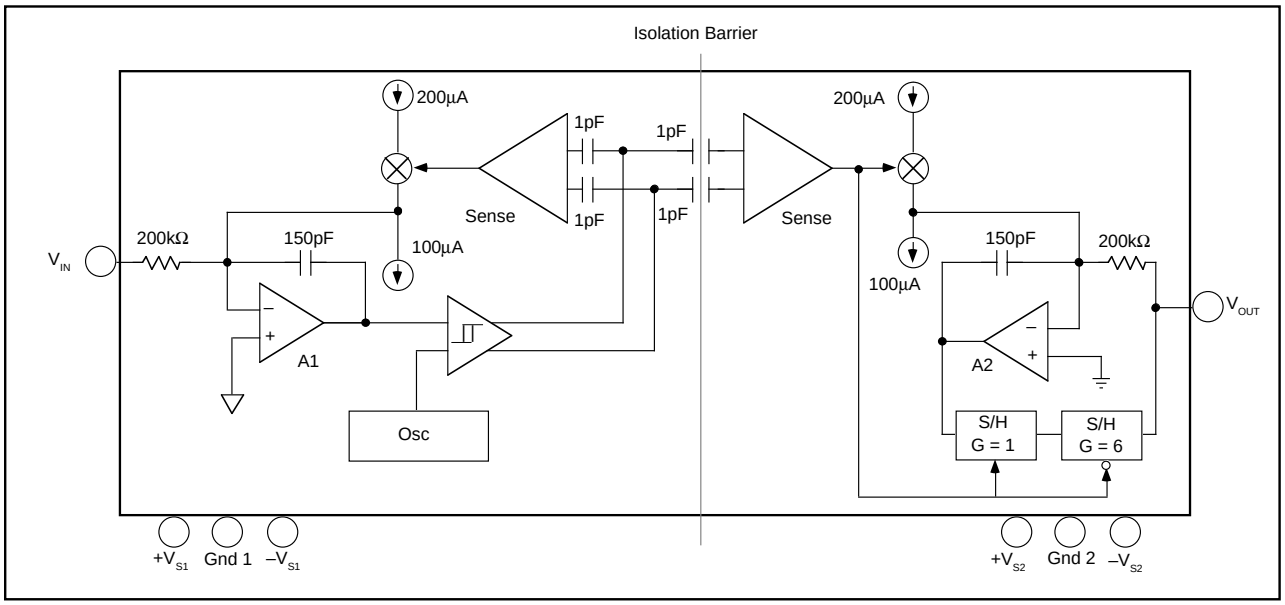

FIGURE 1. Block Diagram.

performance curve shows this behavior graphically; at input frequencies above 250kHz the device generates an output signal component of reduced magnitude at a frequency below 250kHz. This is the aliasing effect of sampling at frequencies less than 2 times the signal frequency (the Nyquist frequency). Note that at the carrier frequency and its harmonics, both the frequency and amplitude of the aliasing go to zero.

ISOLATION MODE VOLTAGE INDUCED ERRORS

IMV can induce errors at the output as indicated by the plots of IMV vs Frequency. It should be noted that if the IMV frequency exceeds 250kHz, the output also will display spurious outputs (aliasing), in a manner similar to that for V_{IN} > 250kHz and the amplifier response will be identical to that shown in the Signal Response to Inputs Greater Than 250kHz performance curve. This occurs because IMV-induced errors behave like input-referred error signals. To predict the total error, divide the isolation voltage by the IMR shown in the IMR vs Frequency curve and compute the amplifier response to this input-referred error signal from the data given in the Signal Response to Inputs Greater than 250kHz performance curve. For example, if a 800kHz 1000Vrms IMR is present, then a total of [(–60dB) + (–30dB)] x (1000V) = 32mV error signal at 200kHz plus a 1V, 800kHz error signal will be present at the output.

HIGH IMV dV/dt ERRORS

As the IMV frequency increases and the dV/dt exceeds 1000V/µs, the sense amp may start to false trigger, and the output will display spurious errors. The common mode current being sent across the barrier by the high slew rate is the cause of the false triggering of the sense amplifier. Lowering the power supply voltages below ±15V may decrease the dV/dt to 500V/µs for typical performance.

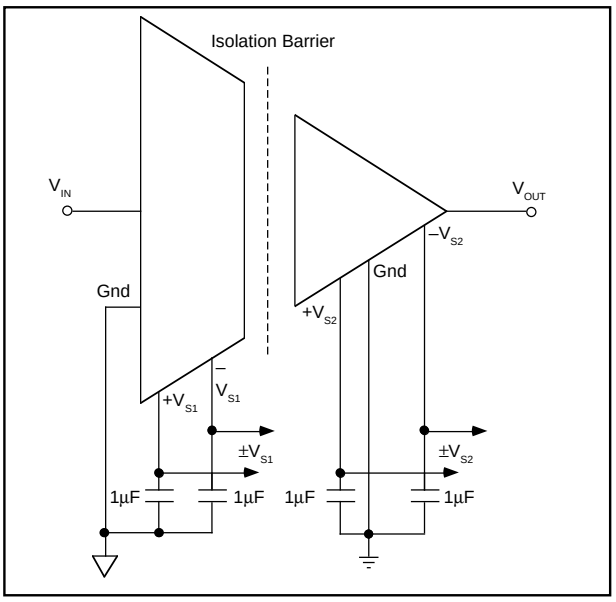

FIGURE 2. Basic Signal and Power Connections.

HIGH VOLTAGE TESTING

Burr-Brown Corporation has adopted a partial discharge test criterion that conforms to the German VDE0884 Optocoupler Standards. This method requires the measurement of minute current pulses (<5pC) while applying 2400Vrms, 60Hz high voltage stress across every ISO122 isolation barrier. No partial discharge may be initiated to pass this test. This criterion confirms transient overvoltage (1.6 x 1500Vrms) protection without damage to the ISO122. Lifetest results verify the absence of failure under continuous rated voltage and maximum temperature.

This new test method represents the "state of the art" for non-destructive high voltage reliability testing. It is based on the effects of non-uniform fields that exist in heterogeneous dielectric material during barrier degradation. In the case of void non-uniformities, electric field stress begins to ionize the void region before bridging the entire high voltage barrier. The transient conduction of charge during and after the ionization can be detected externally as a burst of 0.01-0.1µs current pulses that repeat on each AC voltage cycle. The minimum AC barrier voltage that initiates partial discharge is defined as the "inception voltage." Decreasing the barrier voltage to a lower level is required before partial discharge ceases and is defined as the "extinction voltage." We have characterized and developed the package insulation processes to yield an inception voltage in excess of 2400Vrms so that transient overvoltages below this level will not damage the ISO122. The extinction voltage is above 1500Vrms so that even overvoltage induced partial discharge will cease once the barrier voltage is reduced to the 1500Vrms (rated) level. Older high voltage test methods relied on applying a large enough overvoltage (above rating) to break down marginal parts, but not so high as to damage good ones. Our new partial discharge testing gives us more confidence in barrier reliability than breakdown/no breakdown criteria.

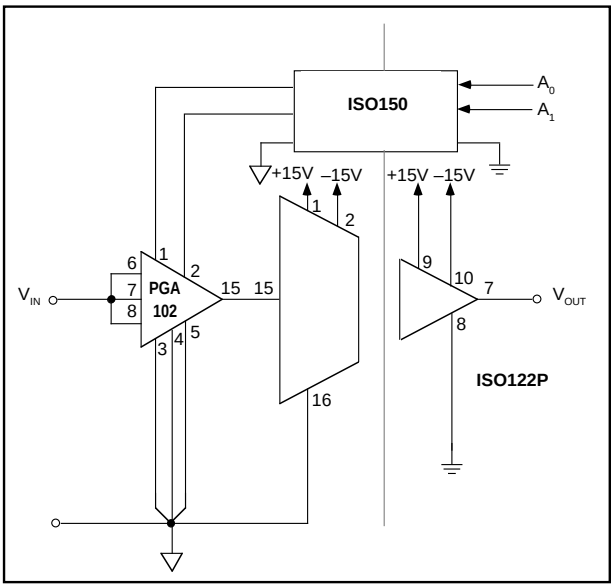

FIGURE 3. Programmable-Gain Isolation Channel with Gains of 1, 10, and 100.

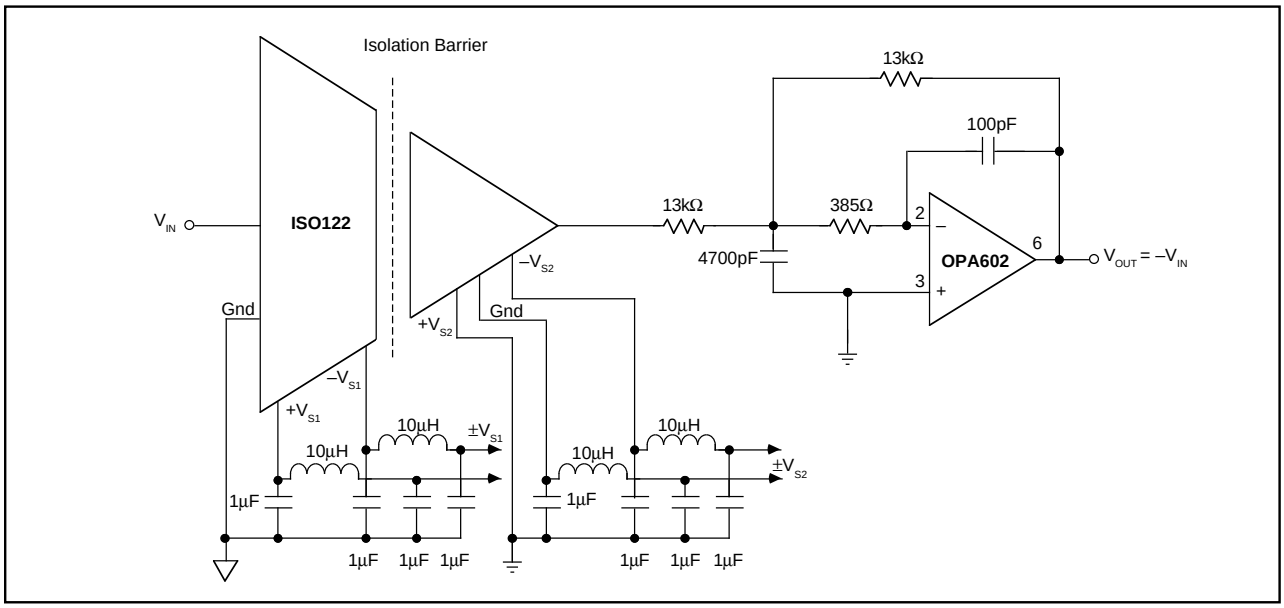

FIGURE 4. Optional π Filter to Minimize Power Supply Feedthrough Noise; Output Filter to Remove 500kHz Carrier Ripple. For more information concerning output filter refer to AB-023.

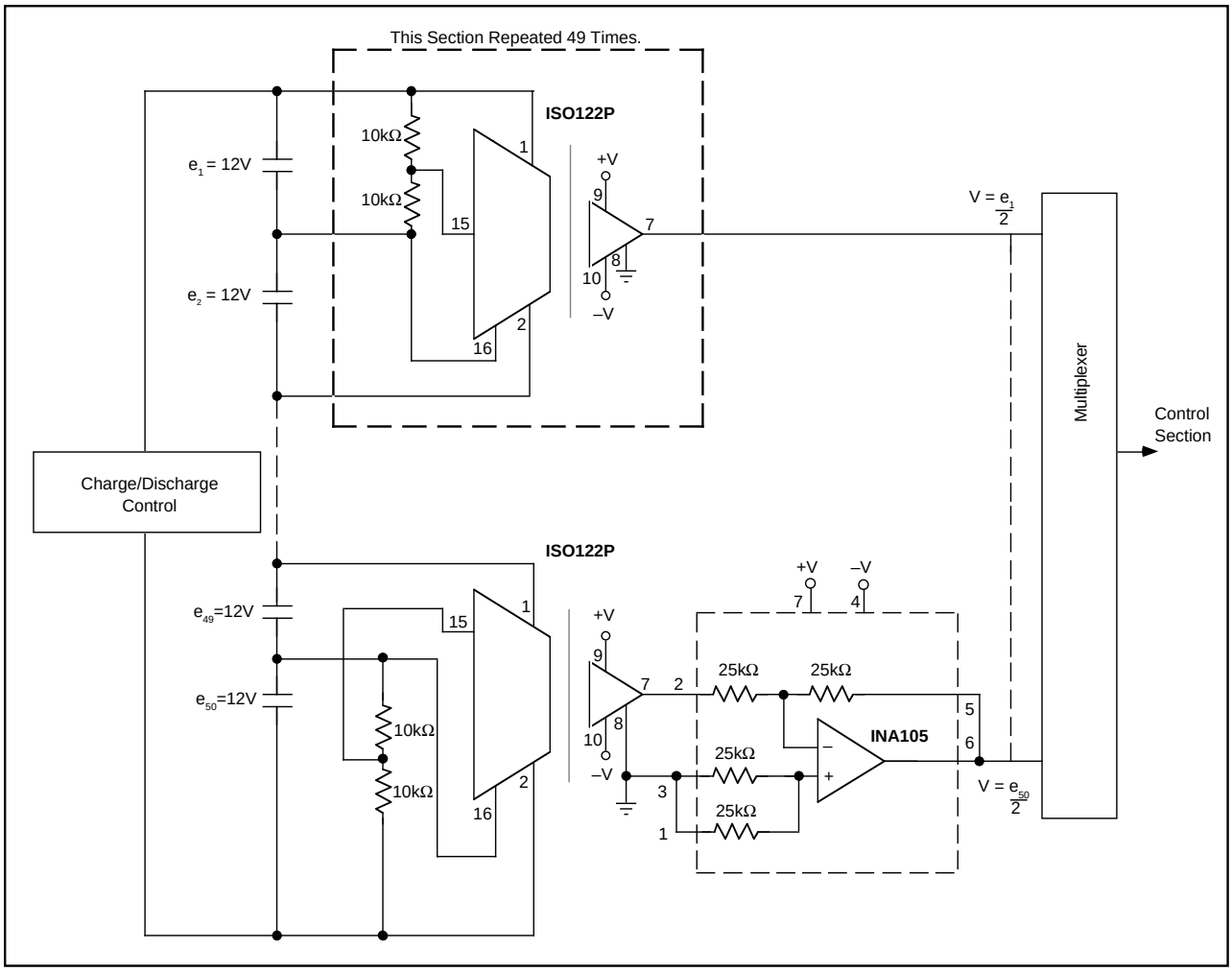

FIGURE 5. Battery Monitor for a 600V Battery Power System. (Derives Input Power from the Battery.)

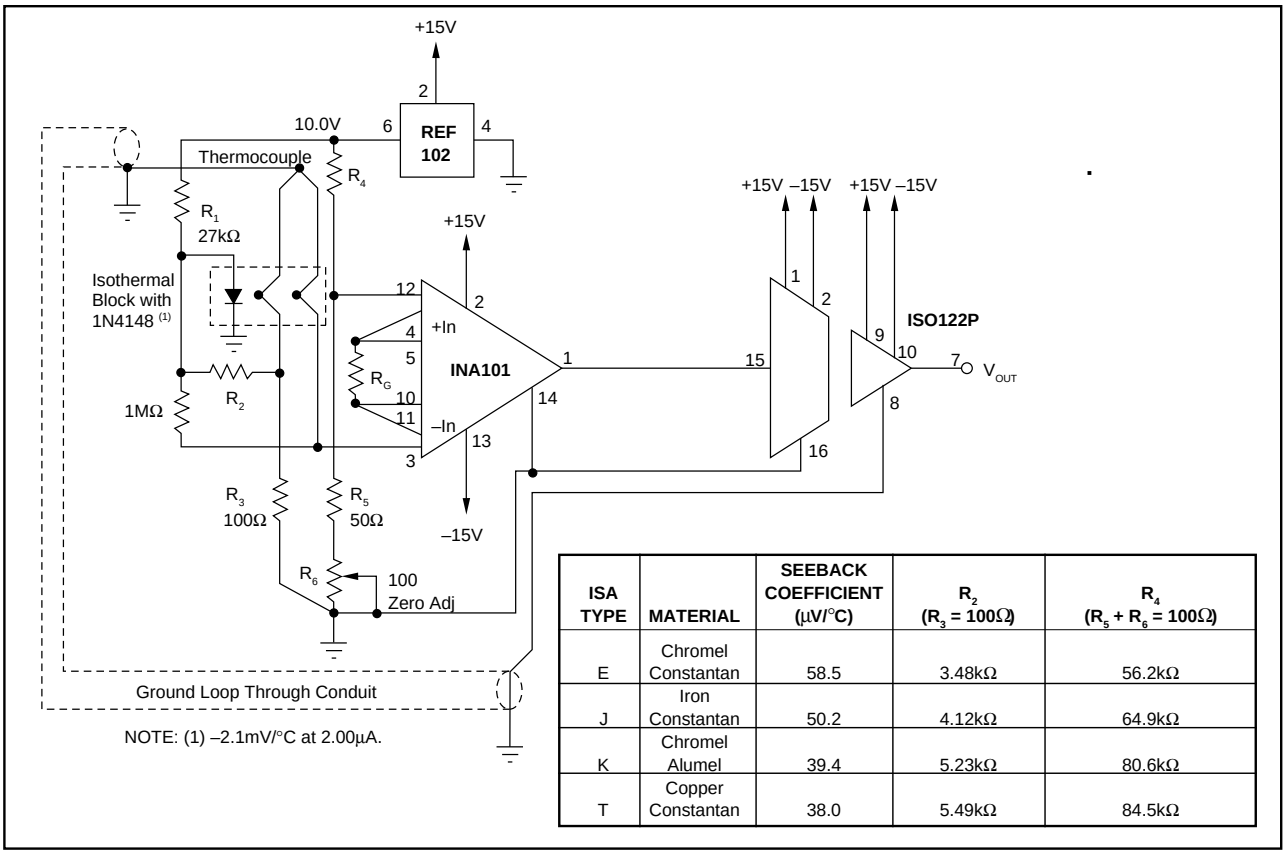

ISA TYPE	MATERIAL	SEEBACK COEFFICIENT (µV/°C)	R_2 (R_3 = 100Ω)	R_4 (R_5 + R_6 = 100Ω)
E	Chromel Constantan	58.5	3.48kΩ	56.2kΩ
J	Iron Constantan	50.2	4.12kΩ	64.9kΩ
K	Chromel Alumel	39.4	5.23kΩ	80.6kΩ
T	Copper Constantan	38.0	5.49kΩ	84.5kΩ

FIGURE 6. Thermocouple Amplifier with Ground Loop Elimination, Cold Junction Compensation, and Up-scale Burn-out.

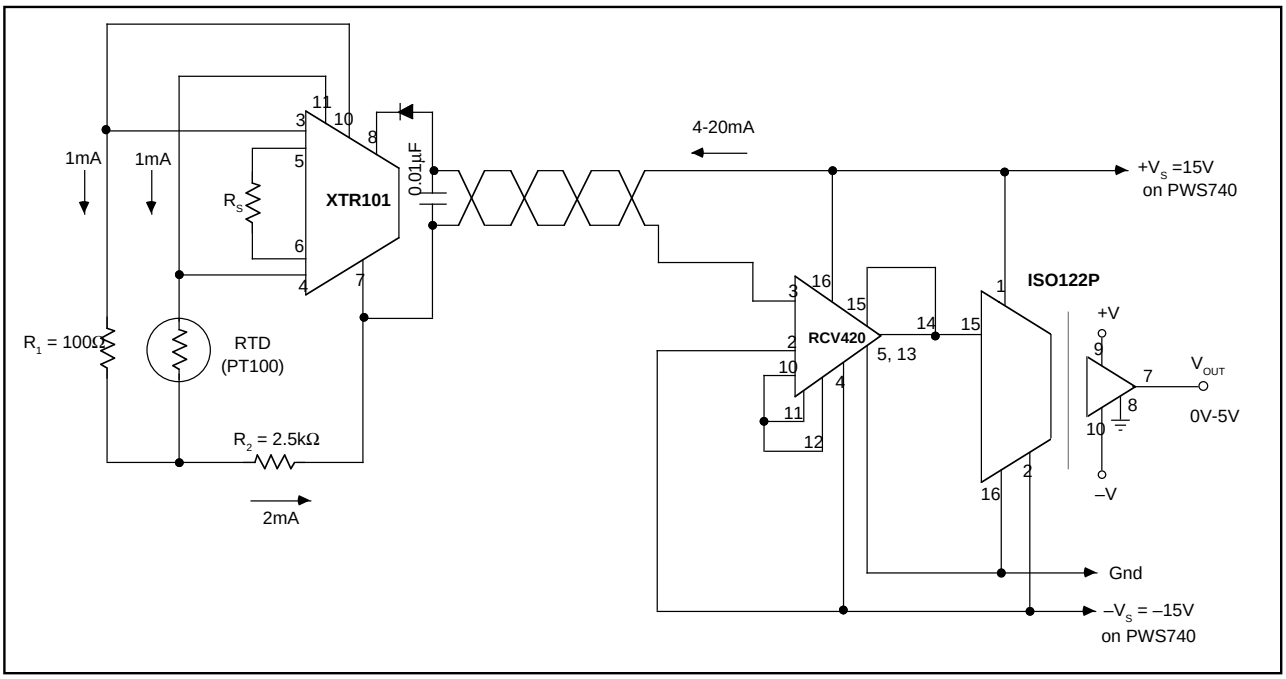

FIGURE 7. Isolated 4-20mA Instrument Loop. (RTD shown.)

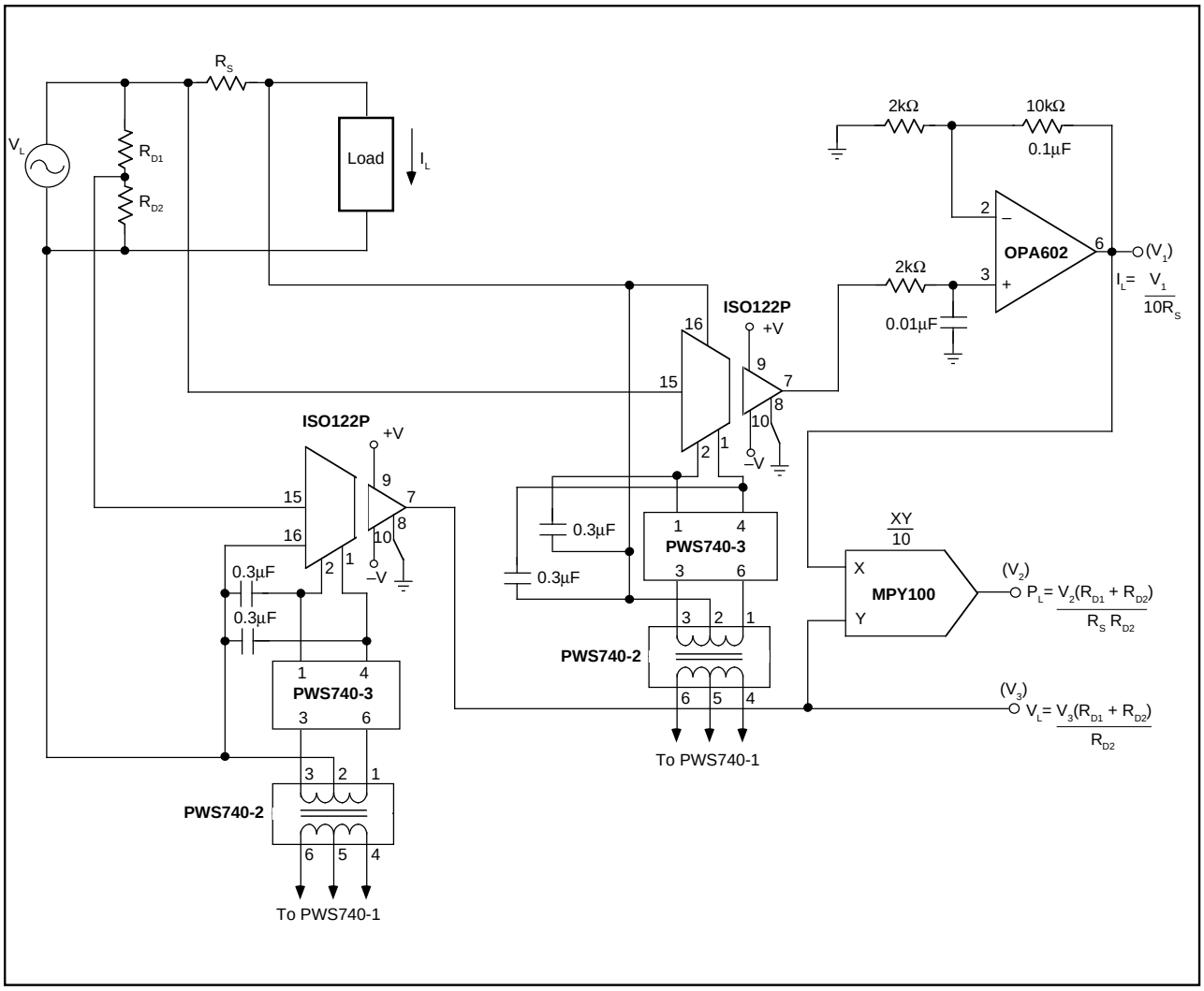

FIGURE 8. Isolated Power Line Monitor.

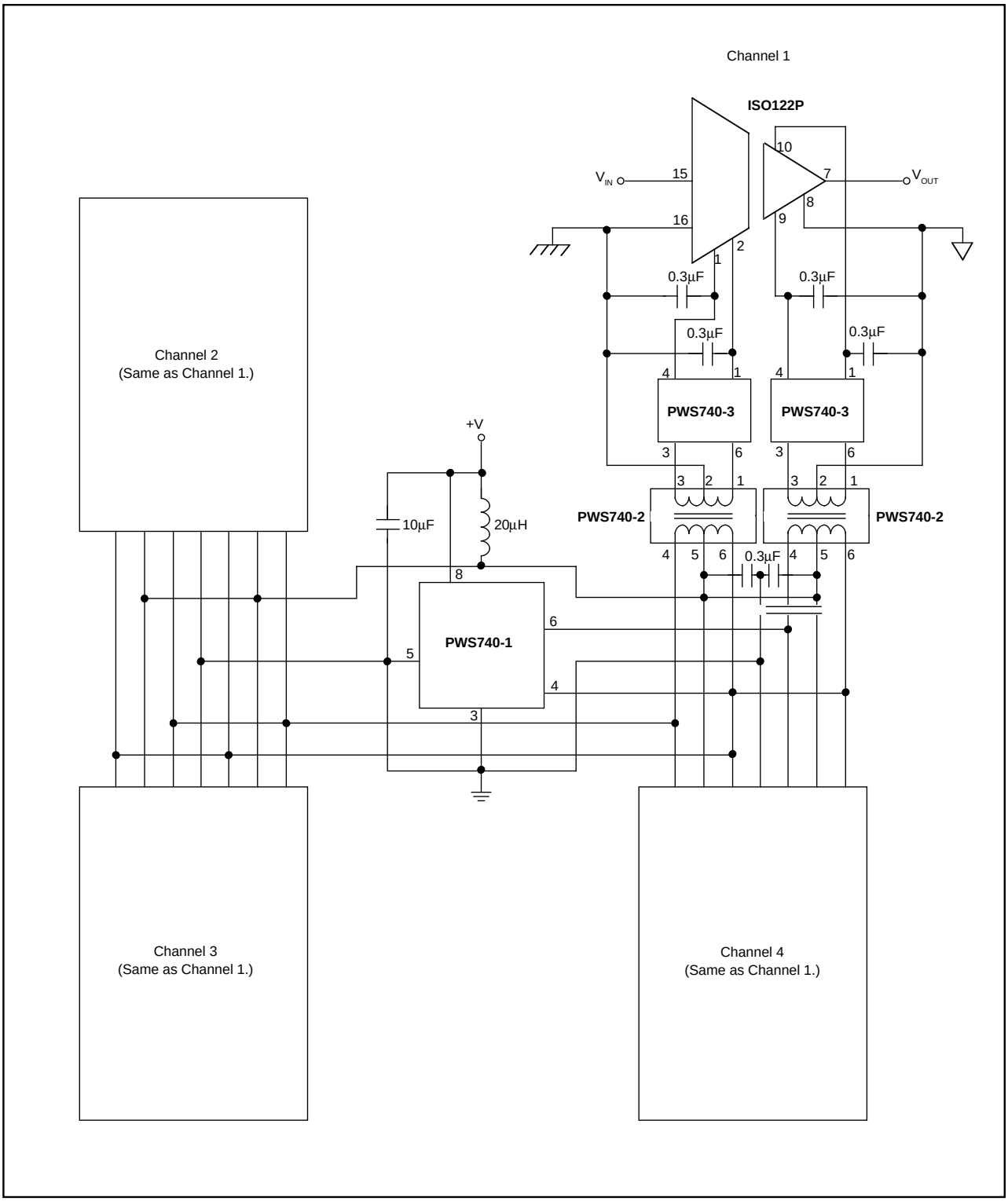

FIGURE 9. Three-Port, Low-Cost, Four-Channel Isolated, Data Acquisition System.

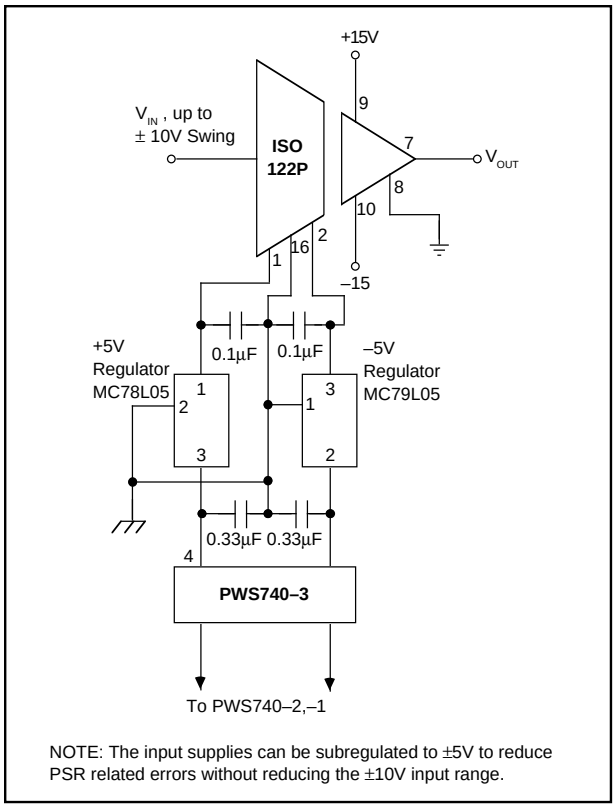

FIGURE 10. Improved PSR Using External Regulator.

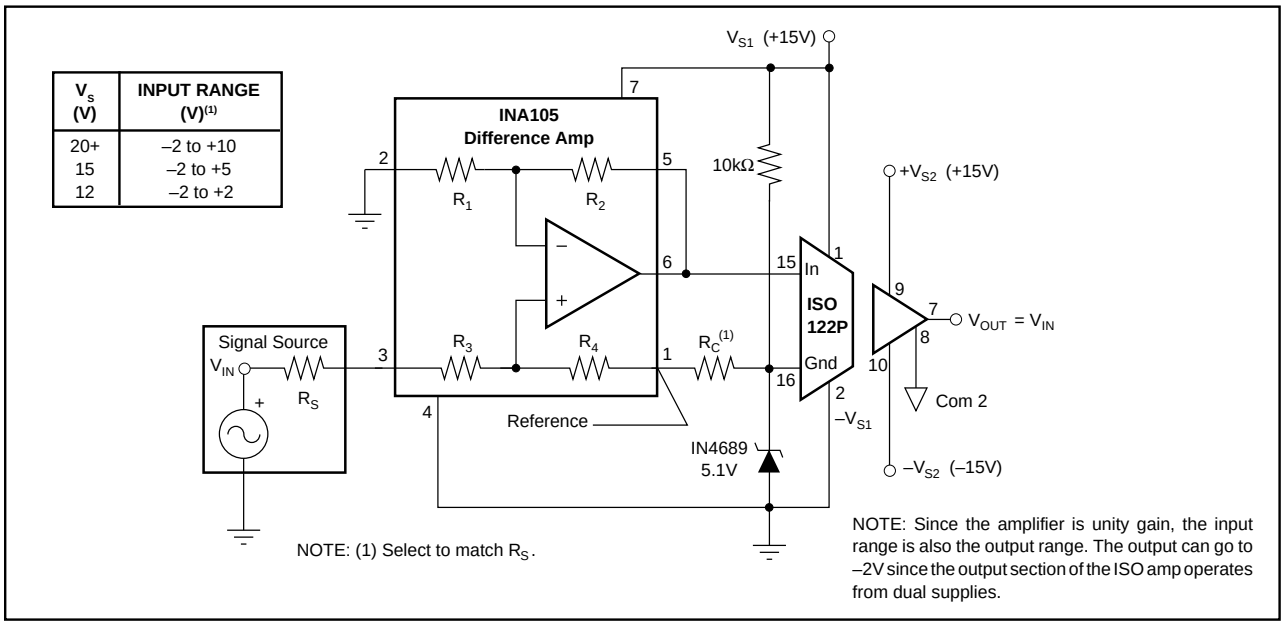

V_s (V)	INPUT RANGE (V)(1)
20+	–2 to +10
15	–2 to +5
12	–2 to +2

FIGURE 11. Single Supply Operation of the ISO122P Isolation Amplifier. For additional information see AB-009.

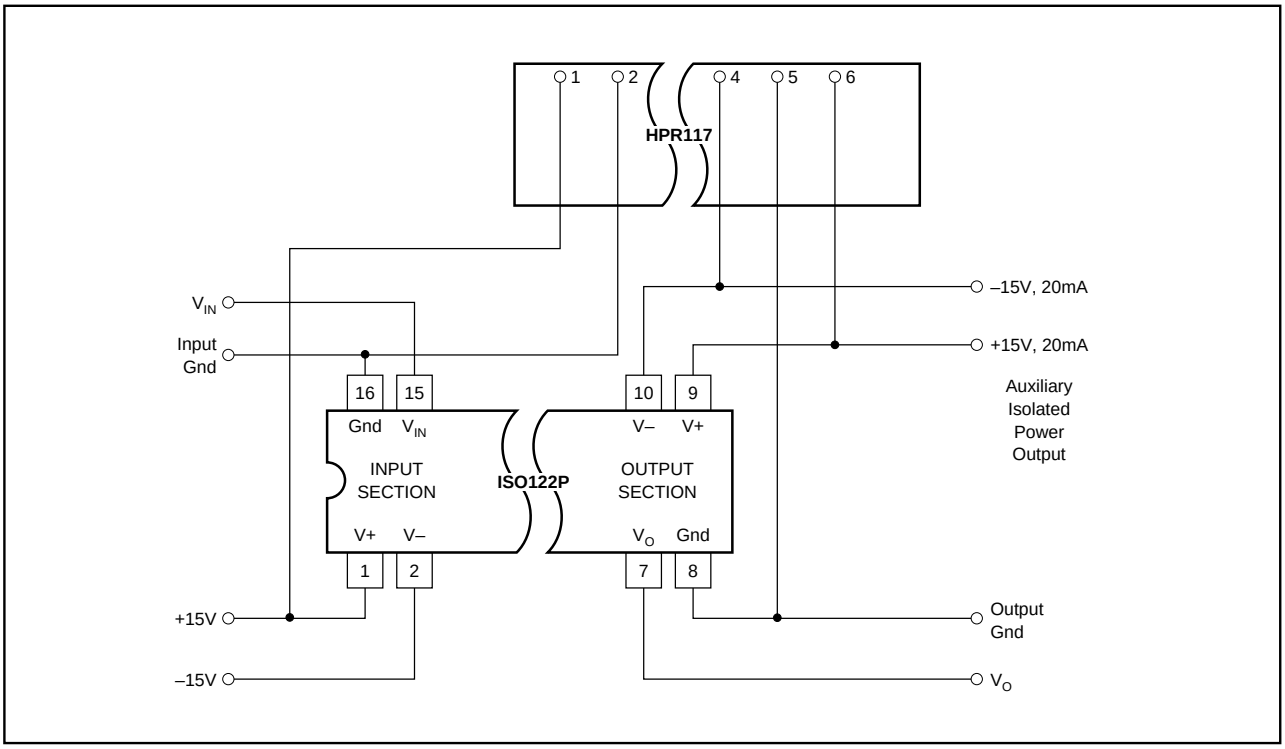

FIGURE 12. Input-Side Powered ISO Amp. For additional information refer to AB-024.

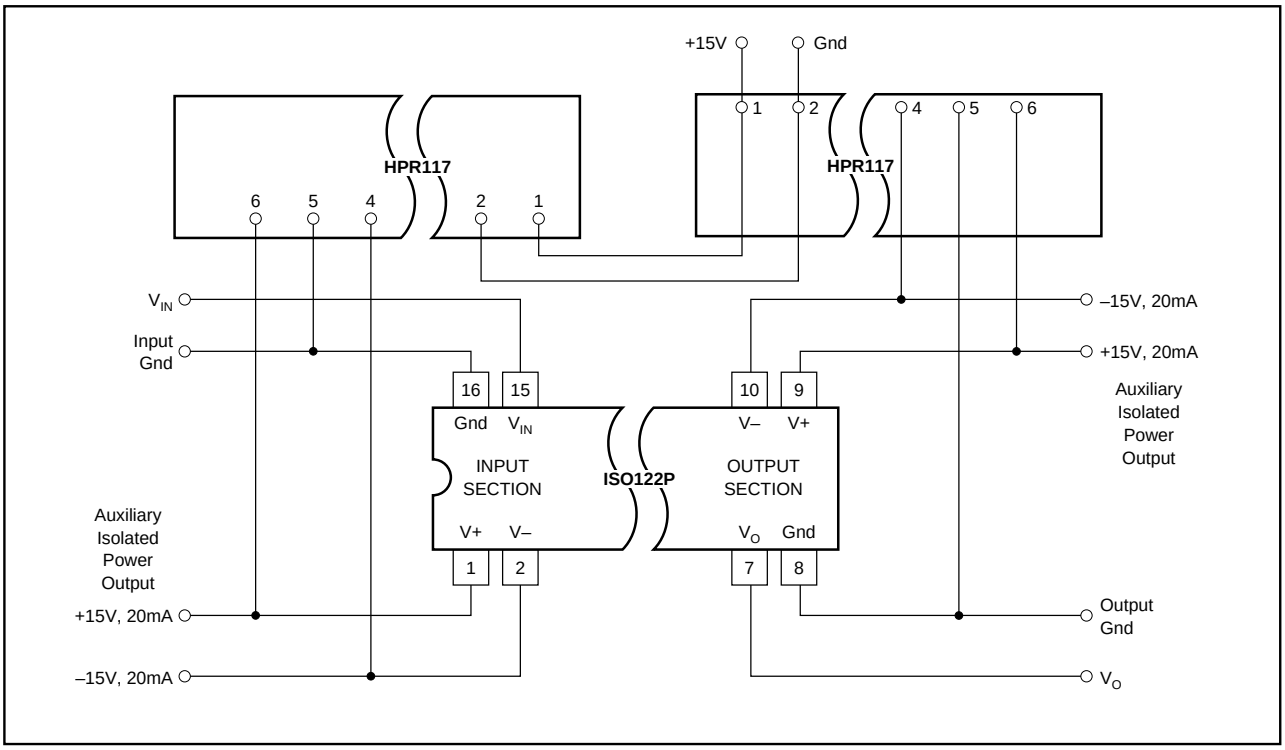

FIGURE 13. Powered ISO Amp with Three-Port Isolation. For additional information refer to AB-024.

PACKAGING INFORMATION

Orderable Device	Status (1)	Package Type	Package Drawing	Pins	Package Qty	Eco Plan (2)	Lead/Ball Finish	MSL Peak Temp (3)	Op Temp (°C)	Top-Side Markings (4)	Samples
ISO122JP	ACTIVE	PDIP	NVF	8	25	Pb-Free (RoHS)	CU NIPDAU	N / A for Pkg Type	-25 to 85	ISO122JP	Samples
ISO122JPE4	ACTIVE	PDIP	NVF	8	25	Pb-Free (RoHS)	CU NIPDAU	N / A for Pkg Type	-25 to 85	ISO122JP	Samples
ISO122JU	ACTIVE	SOIC	DVA	8	20	Green (RoHS & no Sb/Br)	CU NIPDAU	Level-3-260C-168 HR	-25 to 85	ISO 122JU	Samples
ISO122JU/1K	ACTIVE	SOIC	DVA	8	1000	Green (RoHS & no Sb/Br)	CU NIPDAU	Level-3-260C-168 HR	-25 to 85	ISO 122JU	Samples
ISO122JU/1KE4	ACTIVE	SOIC	DVA	8	1000	Green (RoHS & no Sb/Br)	CU NIPDAU	Level-3-260C-168 HR	-25 to 85	ISO 122JU	Samples
ISO122JUE4	ACTIVE	SOIC	DVA	8	20	Green (RoHS & no Sb/Br)	CU NIPDAU	Level-3-260C-168 HR	-25 to 85	ISO 122JU	Samples
ISO122P	ACTIVE	PDIP	NVF	8	25	Pb-Free (RoHS)	CU NIPDAU	N / A for Pkg Type	-25 to 85	ISO122P	Samples
ISO122PE4	ACTIVE	PDIP	NVF	8	25	Pb-Free (RoHS)	CU NIPDAU	N / A for Pkg Type	-25 to 85	ISO122P	Samples
ISO122U	ACTIVE	SOIC	DVA	8	20	Green (RoHS & no Sb/Br)	CU NIPDAU	Level-3-260C-168 HR	-25 to 85	ISO 122U	Samples
ISO122U/1K	ACTIVE	SOIC	DVA	8	1000	Green (RoHS & no Sb/Br)	CU NIPDAU	Level-3-260C-168 HR	-25 to 85	ISO 122U	Samples
ISO122U/1KE4	ACTIVE	SOIC	DVA	8	1000	Green (RoHS & no Sb/Br)	CU NIPDAU	Level-3-260C-168 HR	-25 to 85	ISO 122U	Samples
ISO122UE4	ACTIVE	SOIC	DVA	8	20	Green (RoHS & no Sb/Br)	CU NIPDAU	Level-3-260C-168 HR	-25 to 85	ISO 122U	Samples

(1) The marketing status values are defined as follows:
ACTIVE: Product device recommended for new designs.
LIFEBUY: TI has announced that the device will be discontinued, and a lifetime-buy period is in effect.
NRND: Not recommended for new designs. Device is in production to support existing customers, but TI does not recommend using this part in a new design.
PREVIEW: Device has been announced but is not in production. Samples may or may not be available.
OBSOLETE: TI has discontinued the production of the device.

(2) Eco Plan - The planned eco-friendly classification: Pb-Free (RoHS), Pb-Free (RoHS Exempt), or Green (RoHS & no Sb/Br) - please check http://www.ti.com/productcontent for the latest availability information and additional product content details.
TBD: The Pb-Free/Green conversion plan has not been defined.

Pb-Free (RoHS): TI's terms "Lead-Free" or "Pb-Free" mean semiconductor products that are compatible with the current RoHS requirements for all 6 substances, including the requirement that lead not exceed 0.1% by weight in homogeneous materials. Where designed to be soldered at high temperatures, TI Pb-Free products are suitable for use in specified lead-free processes.
Pb-Free (RoHS Exempt): This component has a RoHS exemption for either 1) lead-based flip-chip solder bumps used between the die and package, or 2) lead-based die adhesive used between the die and leadframe. The component is otherwise considered Pb-Free (RoHS compatible) as defined above.
Green (RoHS & no Sb/Br): TI defines "Green" to mean Pb-Free (RoHS compatible), and free of Bromine (Br) and Antimony (Sb) based flame retardants (Br or Sb do not exceed 0.1% by weight in homogeneous material)

(3) MSL, Peak Temp. -- The Moisture Sensitivity Level rating according to the JEDEC industry standard classifications, and peak solder temperature.

(4) Only one of markings shown within the brackets will appear on the physical device.

Important Information and Disclaimer: The information provided on this page represents TI's knowledge and belief as of the date that it is provided. TI bases its knowledge and belief on information provided by third parties, and makes no representation or warranty as to the accuracy of such information. Efforts are underway to better integrate information from third parties. TI has taken and continues to take reasonable steps to provide representative and accurate information but may not have conducted destructive testing or chemical analysis on incoming materials and chemicals. TI and TI suppliers consider certain information to be proprietary, and thus CAS numbers and other limited information may not be available for release.

In no event shall TI's liability arising out of such information exceed the total purchase price of the TI part(s) at issue in this document sold by TI to Customer on an annual basis.

NVF (R-PDIP-T8/16) **PLASTIC DUAL-IN-LINE**

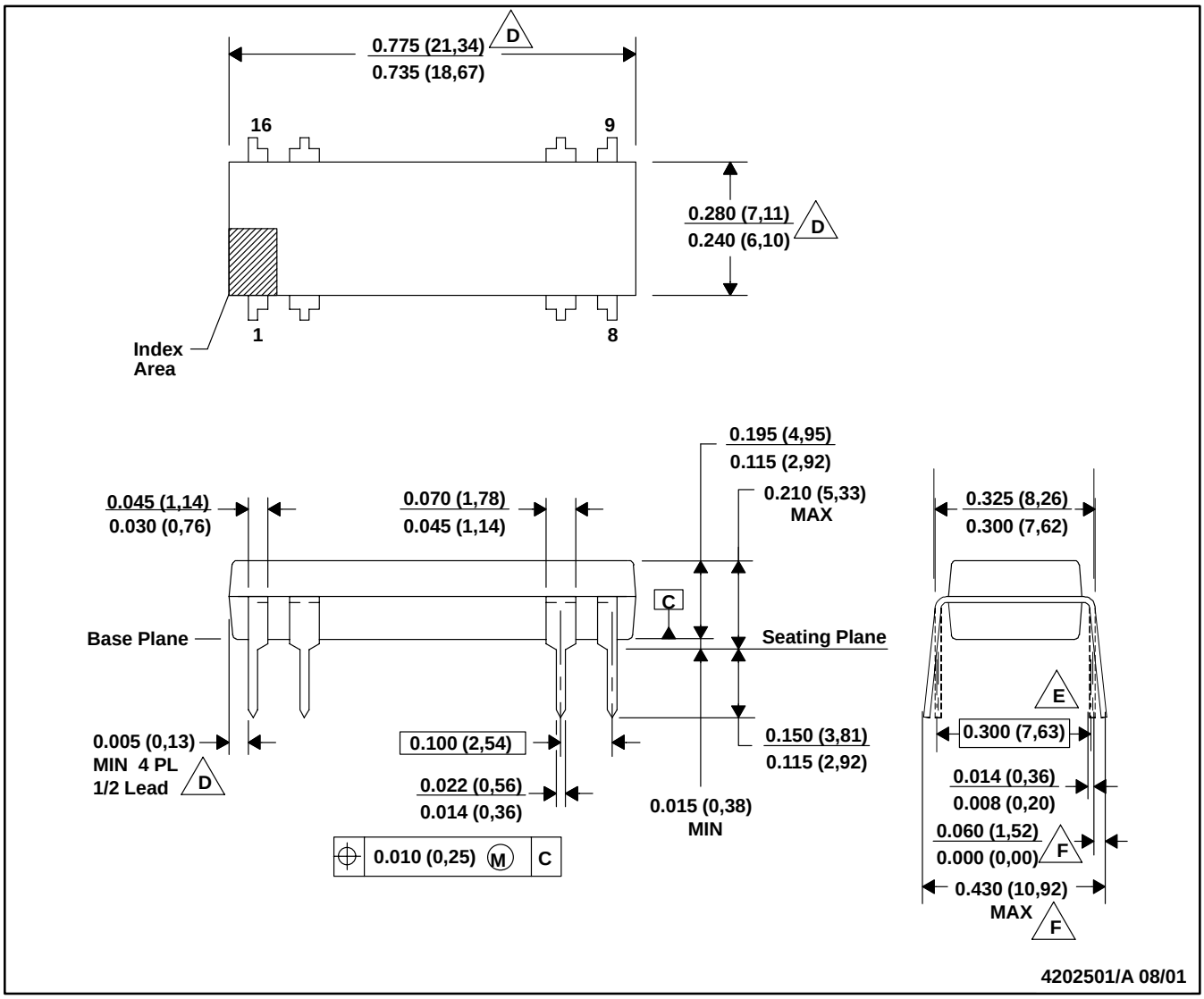

A. All linear dimensions are in inches (millimeters).
B. This drawing is subject to change without notice.
C. Falls within JEDEC MS-001-BB with the exception of lead count.
D. Dimensions do not include mold flash or protrusions. Mold flash or protrusions shall not exceed 0.010 (0,25).
E. Dimensions measured with the leads constrained to be perpendicular to Datum C.
F. Dimensions are measured at the lead tips with the leads unconstrained.
G. A visual index feature must be located within the cross-hatched area.

DVA (R-PDSO-G8/28) **PLASTIC SMALL-OUTLINE**

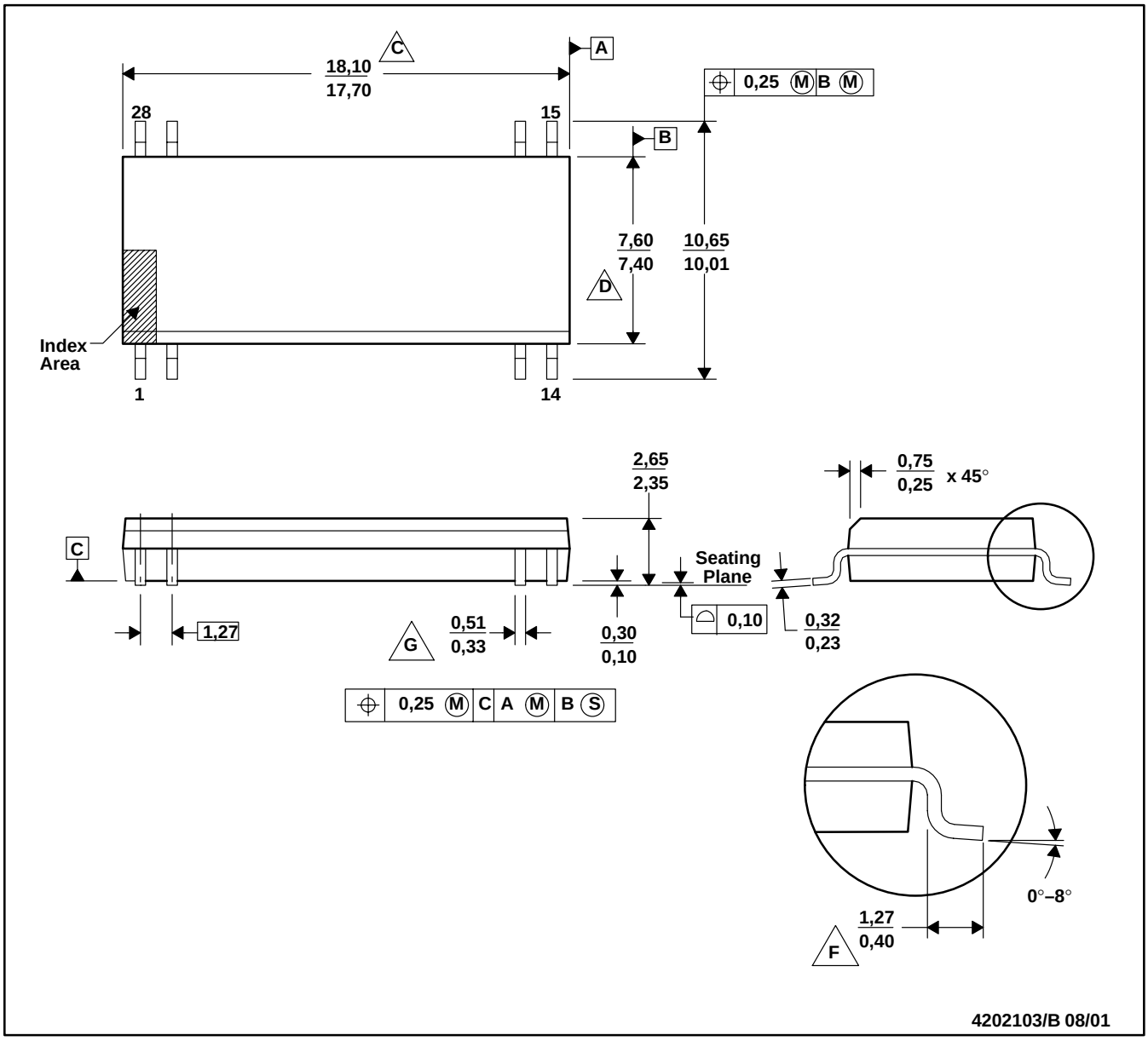

NOTES:
- A. All linear dimensions are in millimeters.
- B. This drawing is subject to change without notice.
- C. Body length dimension does not include mold flash, protrusions, or gate burrs. Mold flash, protrusions, and gate burrs shall not exceed 0,15 mm per side.
- D. Body width dimension does not include inter-lead flash or portrusions. Inter-lead flash and protrusions shall not exceed 0,25 mm per side.
- E. The chamfer on the body is optional. If it is not present, a visual index feature must be located within the cross-hatched area.
- F. Lead dimension is the length of terminal for soldering to a substrate.
- G. Lead width, as measured 0,36 mm or greater above the seating plane, shall not exceed a maximum value of 0,61 mm.
- H. Lead-to-lead coplanarity shall be less than 0,10 mm from seating plane.
- I. Falls within JEDEC MS-013-AE with the exception of the number of leads.

IMPORTANT NOTICE

Texas Instruments Incorporated and its subsidiaries (TI) reserve the right to make corrections, enhancements, improvements and other changes to its semiconductor products and services per JESD46, latest issue, and to discontinue any product or service per JESD48, latest issue. Buyers should obtain the latest relevant information before placing orders and should verify that such information is current and complete. All semiconductor products (also referred to herein as “components”) are sold subject to TI’s terms and conditions of sale supplied at the time of order acknowledgment.

TI warrants performance of its components to the specifications applicable at the time of sale, in accordance with the warranty in TI’s terms and conditions of sale of semiconductor products. Testing and other quality control techniques are used to the extent TI deems necessary to support this warranty. Except where mandated by applicable law, testing of all parameters of each component is not necessarily performed.

TI assumes no liability for applications assistance or the design of Buyers’ products. Buyers are responsible for their products and applications using TI components. To minimize the risks associated with Buyers’ products and applications, Buyers should provide adequate design and operating safeguards.

TI does not warrant or represent that any license, either express or implied, is granted under any patent right, copyright, mask work right, or other intellectual property right relating to any combination, machine, or process in which TI components or services are used. Information published by TI regarding third-party products or services does not constitute a license to use such products or services or a warranty or endorsement thereof. Use of such information may require a license from a third party under the patents or other intellectual property of the third party, or a license from TI under the patents or other intellectual property of TI.

Reproduction of significant portions of TI information in TI data books or data sheets is permissible only if reproduction is without alteration and is accompanied by all associated warranties, conditions, limitations, and notices. TI is not responsible or liable for such altered documentation. Information of third parties may be subject to additional restrictions.

Resale of TI components or services with statements different from or beyond the parameters stated by TI for that component or service voids all express and any implied warranties for the associated TI component or service and is an unfair and deceptive business practice. TI is not responsible or liable for any such statements.

Buyer acknowledges and agrees that it is solely responsible for compliance with all legal, regulatory and safety-related requirements concerning its products, and any use of TI components in its applications, notwithstanding any applications-related information or support that may be provided by TI. Buyer represents and agrees that it has all the necessary expertise to create and implement safeguards which anticipate dangerous consequences of failures, monitor failures and their consequences, lessen the likelihood of failures that might cause harm and take appropriate remedial actions. Buyer will fully indemnify TI and its representatives against any damages arising out of the use of any TI components in safety-critical applications.

In some cases, TI components may be promoted specifically to facilitate safety-related applications. With such components, TI’s goal is to help enable customers to design and create their own end-product solutions that meet applicable functional safety standards and requirements. Nonetheless, such components are subject to these terms.

No TI components are authorized for use in FDA Class III (or similar life-critical medical equipment) unless authorized officers of the parties have executed a special agreement specifically governing such use.

Only those TI components which TI has specifically designated as military grade or “enhanced plastic” are designed and intended for use in military/aerospace applications or environments. Buyer acknowledges and agrees that any military or aerospace use of TI components which have ***not*** been so designated is solely at the Buyer's risk, and that Buyer is solely responsible for compliance with all legal and regulatory requirements in connection with such use.

TI has specifically designated certain components as meeting ISO/TS16949 requirements, mainly for automotive use. In any case of use of non-designated products, TI will not be responsible for any failure to meet ISO/TS16949.

Products		**Applications**	
Audio	www.ti.com/audio	Automotive and Transportation	www.ti.com/automotive
Amplifiers	amplifier.ti.com	Communications and Telecom	www.ti.com/communications
Data Converters	dataconverter.ti.com	Computers and Peripherals	www.ti.com/computers
DLP® Products	www.dlp.com	Consumer Electronics	www.ti.com/consumer-apps
DSP	dsp.ti.com	Energy and Lighting	www.ti.com/energy
Clocks and Timers	www.ti.com/clocks	Industrial	www.ti.com/industrial
Interface	interface.ti.com	Medical	www.ti.com/medical
Logic	logic.ti.com	Security	www.ti.com/security
Power Mgmt	power.ti.com	Space, Avionics and Defense	www.ti.com/space-avionics-defense
Microcontrollers	microcontroller.ti.com	Video and Imaging	www.ti.com/video
RFID	www.ti-rfid.com		
OMAP Applications Processors	www.ti.com/omap	**TI E2E Community**	e2e.ti.com
Wireless Connectivity	www.ti.com/wirelessconnectivity		

Mailing Address: Texas Instruments, Post Office Box 655303, Dallas, Texas 75265
Copyright © 2013, Texas Instruments Incorporated

ООО «ЛайфЭлектроникс» “LifeElectronics” LLC

ИНН 7805602321 КПП 780501001 Р/С 40702810122510004610 ФАКБ "АБСОЛЮТ БАНК" (ЗАО) в г.Санкт-Петербурге К/С 30101810900000000703 БИК 044030703

Компания «Life Electronics» занимается поставками электронных компонентов импортного и отечественного производства от производителей и со складов крупных дистрибьюторов Европы, Америки и Азии.

С конца 2013 года компания активно расширяет линейку поставок компонентов по направлению коаксиальный кабель, кварцевые генераторы и конденсаторы (керамические, пленочные, электролитические), за счёт заключения дистрибьюторских договоров

Мы предлагаем:

- *Конкурентоспособные цены и скидки постоянным клиентам.*
- *Специальные условия для постоянных клиентов.*
- *Подбор аналогов.*
- *Поставку компонентов в любых объемах, удовлетворяющих вашим потребностям.*

- *Приемлемые сроки поставки, возможна ускоренная поставка.*
- *Доставку товара в любую точку России и стран СНГ.*
- *Комплексную поставку.*
- *Работу по проектам и поставку образцов.*
- *Формирование склада под заказчика.*

- *Сертификаты соответствия на поставляемую продукцию (по желанию клиента).*
- *Тестирование поставляемой продукции.*
- *Поставку компонентов, требующих военную и космическую приемку.*
- *Входной контроль качества.*
- *Наличие сертификата ISO.*

В составе нашей компании организован Конструкторский отдел, призванный помогать разработчикам, и инженерам.

Конструкторский отдел помогает осуществить:

- *Регистрацию проекта у производителя компонентов.*
- *Техническую поддержку проекта.*
- *Защиту от снятия компонента с производства.*
- *Оценку стоимости проекта по компонентам.*
- *Изготовление тестовой платы монтаж и пусконаладочные работы.*

Тел: +7 (812) 336 43 04 (многоканальный)
Email: org@lifeelectronics.ru

www.lifeelectronics.ru