19-0306; Rev 8; 10/03

MAXIM

1µA Supply-Current, True +3V to +5.5V RS-232 Transceivers with AutoShutdown

MAX3221/MAX3223/MAX3243

General Description

The MAX3221/MAX3223/MAX3243 achieve 1µA supply current with Maxim's revolutionary AutoShutdown™ feature. When the MAX3221/MAX3223/MAX3243 do not sense a valid signal level on their receiver inputs, the on-board power supply and drivers shut down. This occurs if the RS-232 cable is disconnected or if the transmitters of the connected peripheral are turned off. The system turns on again when a valid level is applied to any RS-232 receiver input. As a result, the system saves power without changes to the existing BIOS or operating system.

The MAX3221/MAX3223/MAX3243 transceivers are 3V-powered EIA/TIA-232 and V.28/V.24 communications interfaces intended for notebook computer applications. A proprietary, high-efficiency, dual charge-pump power supply and a low-dropout transmitter combine to deliver true RS-232 performance from a single +3.0V to +5.5V supply. A guaranteed data rate of 120kbps provides compatibility with popular software for communicating with personal computers.

The MAX3221/MAX3223/MAX3243 require only 0.1µF capacitors in 3.3V operation, and can operate from input voltages ranging from +3.0V to +5.5V. They are ideal for 3.3V-only systems, mixed 3.3V and 5.0V systems, or 5.0V-only systems that require true RS-232 performance.

The MAX3221 is a 1-driver/1-receiver 16-pin SSOP version of the 20-pin MAX3223 (2-driver/2-receiver). The MAX3243 3-driver/5-receiver, complete serial port is ideal for notebook or subnotebook computers. The MAX3243 includes one complementary always-active receiver. This receiver can monitor an external device (such as a modem) in shutdown, without forward biasing the protection diodes in a UART that may have V_{CC} completely removed.

Selector Guide

PART	Tx	Rx	V_{CC} RANGE (V)	AutoShutdown
MAX3221	1	1	3.0 to 5.5	Yes
MAX3223	2	2	3.0 to 5.5	Yes
MAX3243	3	5	3.0 to 5.5	Yes

Pin Configurations appear at end of data sheet.

Typical Operating Circuits appear at end of data sheet.

†Future product—contact factory for availability.
AutoShutdown and UCSP are trademarks of Maxim Integrated Products, Inc.

Next Generation Device Features

- **For Space-Constrained Applications: MAX3228/MAX3229: +2.5V to +5.5V RS-232 Transceivers in UCSP™**
- **For Integrated ESD Protection: MAX3222E/MAX3232E/MAX3237E/MAX3241E/ MAX3246E: ±15kV ESD-Protected, Down to 10nA, 3.0V to 5.5V, Up to 1Mbps, True RS-232 Transceivers (MAX3246E Available in UCSP Package)**
- **For Low-Voltage or Data Cable Applications: MAX3380E/MAX3381E: +2.5V to +5.5V, 1µA, 2 Tx/2 Rx RS-232 Transceivers with ±15kV ESD-Protected I/O and Logic Pins**

Applications

Notebook, Subnotebook, and Palmtop Computers

Battery-Powered Equipment

Hand-Held Equipment

Peripherals

Printers

Ordering Information

PART	TEMP RANGE	PIN-PACKAGE
MAX3221CAE	0°C to +70°C	16 SSOP
MAX3221CUE†	0°C to +70°C	16 TSSOP
MAX3221EAE	-40°C to +85°C	16 SSOP
MAX3221EUE†	-40°C to +85°C	16 TSSOP
MAX3223CPP	0°C to +70°C	20 Plastic DIP
MAX3223CAP	0°C to +70°C	20 SSOP
MAX3223CUP	0°C to +70°C	20 TSSOP
MAX3223EPP	-40°C to +85°C	20 Plastic DIP
MAX3223EAP	-40°C to +85°C	20 SSOP
MAX3223EUP	-40°C to +85°C	20 TSSOP
MAX3243CWI	0°C to +70°C	28 Wide SO
MAX3243CAI	0°C to +70°C	28 SSOP
MAX3243CUI	0°C to +70°C	28 TSSOP
MAX3243EWI	-40°C to +85°C	28 Wide SO
MAX3243EAI	-40°C to +85°C	28 SSOP
MAX3243EUI	-40°C to +85°C	28 TSSOP

For pricing, delivery, and ordering information, please contact Maxim/Dallas Direct! at 1-888-629-4642, or visit Maxim's website at www.maxim-ic.com.

1µA Supply-Current, True +3V to +5.5V RS-232 Transceivers with AutoShutdown

ABSOLUTE MAXIMUM RATINGS

V_{CC} ....-0.3V to +6V
V+ (Note 1) ....-0.3V to +7V
V- (Note 1) ....+0.3V to -7V
V+ + |V-| (Note 1) ....+13V
Input Voltages
T_IN, $\overline{FORCEOFF}$, FORCEON, $\overline{EN}$ (MAX3223) ....-0.3V to +6V
R_IN ....±25V
Output Voltages
T_OUT ....±13.2V
R_OUT, $\overline{INVALID}$ ....-0.3V to (V_{CC} + 0.3V)
Short-Circuit Duration
T_OUT ....Continuous
Continuous Power Dissipation (T_A = +70°C)
16-Pin SSOP (derate 7.14mW/°C above +70°C) 571mW
16-Pin TSSOP (derate 6.70mW/°C above +70°C) 533mW
20-Pin Plastic DIP (derate 11.11mW/°C above +70°C) 889mW
20-Pin SSOP (derate 8.00mW/°C above +70°C) 640mW
20-Pin TSSOP DIP (derate 7.00mW/°C above +70°C) 559mW
28-Pin Wide SO (derate 12.50mW/°C above +70°C) 1W
28-Pin SSOP (derate 9.52mW/°C above +70°C) 762mW
28-Pin TSSOP (derate 8.70mW/°C above +70°C) 696mW
Operating Temperature Ranges
MAX32_ _C_ _ ....0°C to +70°C
MAX32_ _E_ _ ....-40°C to +85°C
Storage Temperature Range ....-65°C to +150°C
Lead Temperature (soldering, 10s) ....+300°C

Note 1: V+ and V- can have maximum magnitudes of 7V, but their absolute difference cannot exceed 13V.

Stresses beyond those listed under "Absolute Maximum Ratings" may cause permanent damage to the device. These are stress rating s only, and functional operation of the device at these or any other conditions beyond those indicated in the operational sections of the specificatio ns is not implied. Exposure to absolute maximum rating conditions for extended periods may affect device reliability.

ELECTRICAL CHARACTERISTICS

(V_{CC} = +3.0V to +5.5V, C1–C4 = 0.1µF (Note 2), T_A = T_{MIN} to T_{MAX}, unless otherwise noted. Typical values are at T_A = +25°C.)

PARAMETER	CONDITIONS		MIN	TYP	MAX	UNITS
DC CHARACTERISTICS						
Supply Current, AutoShutdown	V_{CC} = 3.3V or 5.0V, T_A = +25°C	All R_IN open, FORCEON = GND, $\overline{FORCEOFF}$ = V_{CC}		1.0	10	µA
Supply Current, Shutdown		$\overline{FORCEOFF}$ = GND		1.0	10	µA
Supply Current, AutoShutdown Disabled		FORCEON = $\overline{FORCEOFF}$ = V_{CC}, no load		0.3	1.0	mA
LOGIC INPUTS AND RECEIVER OUTPUTS						
Input Logic Threshold Low	T_IN, FORCEON, $\overline{FORCEOFF}$, $\overline{EN}$ (MAX3223)				0.8	V
Input Logic Threshold High	T_IN, EN, FORCEON, $\overline{FORCEOFF}$	V_{CC} = 3.3V	2.0			V
		V_{CC} = 5.0V	2.4			
Input Leakage Current	T_IN, EN, FORCEON, $\overline{FORCEOFF}$			±0.01	±1.0	µA
Output Leakage Current	Receivers disabled			±0.05	±10	µA
Output Voltage Low	I_{OUT} = 1.6mA				0.4	V
Output Voltage High	I_{OUT} = -1.0mA		V_{CC} - 0.6	V_{CC} - 0.1		V
AUTOSHUTDOWN (FORCEON = GND, $\overline{FORCEOFF}$ = V_{CC})						
Receiver Input Thresholds to Transmitters Enabled	Figure 5	Positive threshold			2.7	V
		Negative threshold	-2.7			
Receiver Input Thresholds to Transmitters Disabled	1µA supply current, Figure 5		-0.3		0.3	V
$\overline{INVALID}$ Output Voltage Low	I_{OUT} = 1.6mA				0.4	V
$\overline{INVALID}$ Output Voltage High	I_{OUT} = -1.0mA		V_{CC} - 0.6			V
Receiver Threshold to Transmitters Enabled (t_{WU})	Figure 5			250		µs
Receiver Positive or Negative Threshold to $\overline{INVALID}$ High (t_{INVH})	Figure 5			1		µs
Receiver Positive or Negative Threshold to $\overline{INVALID}$ Low (t_{INVL})	Figure 5			30		µs

ELECTRICAL CHARACTERISTICS (continued)

(V_{CC} = +3.0V to +5.5V, C1–C4 = 0.1µF (Note 2), T_A = T_{MIN} to T_{MAX}, unless otherwise noted. Typical values are at T_A = +25°C.)

PARAMETER	CONDITIONS		MIN	TYP	MAX	UNITS
RECEIVER INPUTS						
Input Voltage Range			-25		25	V
Input Threshold Low	T_A = +25°C	V_{CC} = 3.3V	0.6	1.2		V
		V_{CC} = 5.0V	0.8	1.5		
Input Threshold High	T_A = +25°C	V_{CC} = 3.3V		1.5	2.4	V
		V_{CC} = 5.0V		1.8	2.4	
Input Hysteresis				0.3		V
Input Resistance	T_A = +25°C		3	5	7	kΩ
TRANSMITTER OUTPUTS						
Output Voltage Swing	All transmitter outputs loaded with 3kΩ to ground		±5.0	±5.4		V
Output Resistance	V_{CC} = V+ = V- = 0V, transmitter output = ±2V		300	10M		Ω
Output Short-Circuit Current				±35	±60	mA
Output Leakage Current	V_{OUT} = ±12V, V_{CC} = 0V or 3.0V to 5.5V, transmitters disabled				±25	µA
MOUSE DRIVEABILITY (MAX3243)						
Transmitter Output Voltage	T1IN = T2IN = GND, T3IN = V_{CC}, T3OUT loaded with 3kΩ to GND, T1OUT and T2OUT loaded with 2.5mA each		±5			V
TIMING CHARACTERISTICS						
Maximum Data Rate	R_L = 3kΩ, C_L = 1000pF, one transmitter switching		120	235		kbps
Receiver Propagation Delay	Receiver input to receiver output, C_L = 150pF	t_{PHL}		0.3		µs
		t_{PLH}		0.3		
Receiver Output Enable Time	Normal operation			200		ns
Receiver Output Disable Time	Normal operation			200		ns
Transmitter Skew	$\lvert t_{PHL} - t_{PLH} \rvert$	MAX3221/MAX3223		200		ns
		MAX3243		200	1000	
Receiver Skew	$\lvert t_{PHL} - t_{PLH} \rvert$	MAX3221/MAX3223		100		ns
		MAX3243		100	500	
Transition-Region Slew Rate	V_{CC} = 3.3V, R_L = 3kΩ to 7kΩ, T_A = +25°C, measured from +3V to -3V or -3V to +3V	C_L = 200pF to 2500pF	4	8.0	30	V/µs
		C_L = 200pF to 1000pF	6		30	

Note 2: C1–C4 = 0.1µF, tested at 3.3V ±10%. C1 = 0.047µF, C2–C4 = 0.33µF, tested at 5.0V ±10%.

1µA Supply-Current, True +3V to +5.5V RS-232 Transceivers with AutoShutdown

Typical Operating Characteristics

(V_{CC} = +3.3V, 235kbps data rate, 0.1µF capacitors, all transmitters loaded with 3kΩ, T_A = +25°C, unless otherwise noted.)

MAX3221/MAX3223 TRANSMITTER OUTPUT VOLTAGE vs. LOAD CAPACITANCE

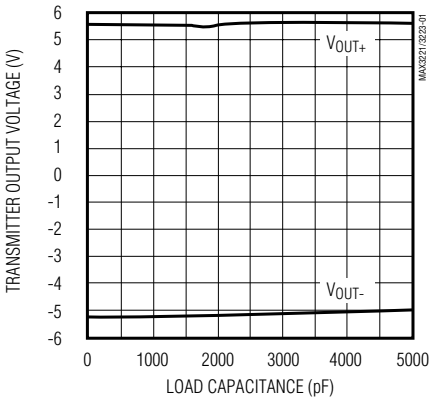

MAX3221/MAX3223 SLEW RATE vs. LOAD CAPACITANCE

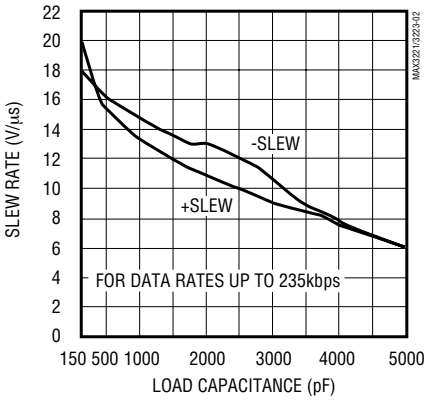

MAX3221/MAX3223 SUPPLY CURRENT vs. LOAD CAPACITANCE WHEN TRANSMITTING DATA

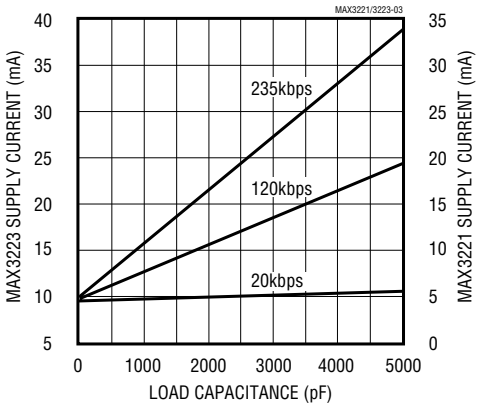

MAX3243 TRANSMITTER OUTPUT VOLTAGE vs. LOAD CAPACITANCE

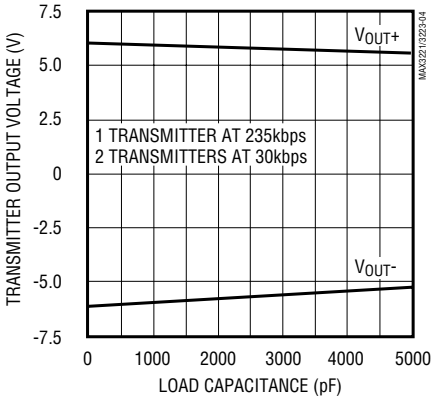

MAX3243 SLEW RATE vs. LOAD CAPACITANCE

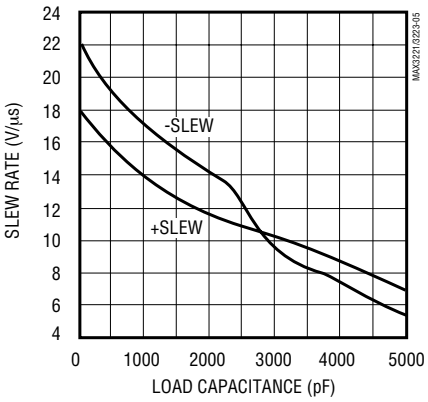

MAX3243 SUPPLY CURRENT vs. LOAD CAPACITANCE WHEN TRANSMITTING DATA

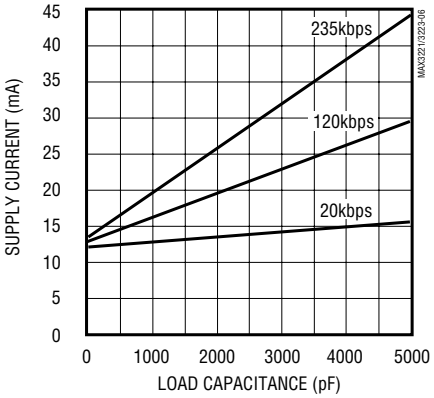

Pin Description

PIN			NAME	FUNCTION
MAX3221	MAX3223	MAX3243		
1	1	—	$\overline{EN}$	Receiver Enable Control. Drive low for normal operation. Drive high to force the receiver outputs into a high-Z state.
5	5	1	C2+	Positive terminal of inverting charge-pump capacitor
6	6	2	C2-	Negative terminal of inverting charge-pump capacitor
7	7	3	V-	-5.5V generated by the charge pump
8	9, 16	4–8	R_IN	RS-232 Receiver Inputs
13	8, 17	9, 10, 11	T_OUT	RS-232 Transmitter Outputs
11	12, 13	12, 13, 14	T_IN	TTL/CMOS Transmitter Inputs
9	10, 15	15–19	R_OUT	TTL/CMOS Receiver Outputs
—	—	20	R2OUTB	Noninverting Receiver Output—active in shutdown
10	11	21	$\overline{INVALID}$	Output of the valid signal detector. Indicates if a valid RS-232 level is present on receiver inputs logic “1”.
16	20	22	$\overline{FORCEOFF}$	Drive low to shut down transmitters and on-board power supply. This overrides all automatic circuitry and FORCEON (Table 1).
12	14	23	FORCEON	Drive high to override automatic circuitry keeping transmitters on ($\overline{FORCEOFF}$ must be high) (Table 1).
4	4	24	C1-	Negative terminal of the voltage doubler charge-pump capacitor
14	18	25	GND	Ground
15	19	26	V_{CC}	+3.0V to +5.5V Supply Voltage
3	3	27	V+	+5.5V generated by the charge pump
2	2	28	C1+	Positive terminal of the voltage doubler charge-pump capacitor

Detailed Description

Dual Charge-Pump Voltage Converter

The MAX3221/MAX3223/MAX3243’s internal power supply consists of a regulated dual charge pump that provides output voltages of +5.5V (doubling charge pump) and -5.5V (inverting charge pump), regardless of the input voltage (V_{CC}) over the +3.0V to +5.5V range. The charge pumps operate in a discontinuous mode: if the output voltages are less than 5.5V, the charge pumps are enabled; if the output voltages exceed 5.5V, the charge pumps are disabled. Each charge pump requires a flying capacitor (C1, C2) and a reservoir capacitor (C3, C4) to generate the V+ and V- supplies.

RS-232 Transmitters

The transmitters are inverting level translators that convert CMOS-logic levels to 5.0V EIA/TIA-232 levels. They guarantee a 120kbps data rate with worst-case loads of 3kΩ in parallel with 1000pF, providing compatibility with PC-to-PC communication software (such as Laplink™). Typically, the MAX3221/MAX3223/MAX3243 can operate at data rates of 235kbps. Transmitters can be paralleled to drive multiple receivers or mice (MAX3243). Figure 1 shows a complete system connection.

When $\overline{FORCEOFF}$ is driven to ground, or the AutoShutdown circuitry senses invalid voltage levels at all receiver inputs, the transmitters are disabled and the outputs are forced into a high-impedance state.

LapLink is a trademark of Traveling Software.

1µA Supply-Current, True +3V to +5.5V RS-232 Transceivers with AutoShutdown

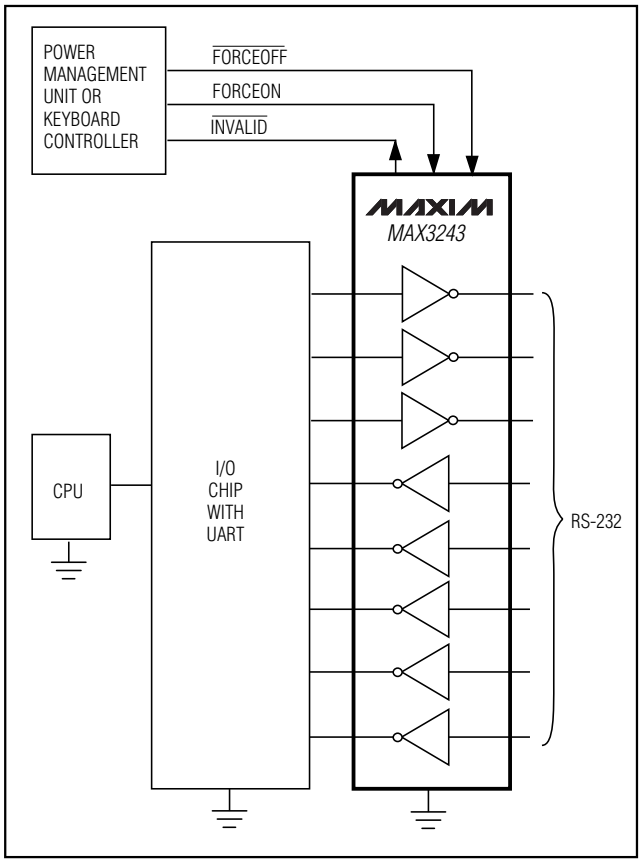

Figure 1. Interface Under Control of PMU

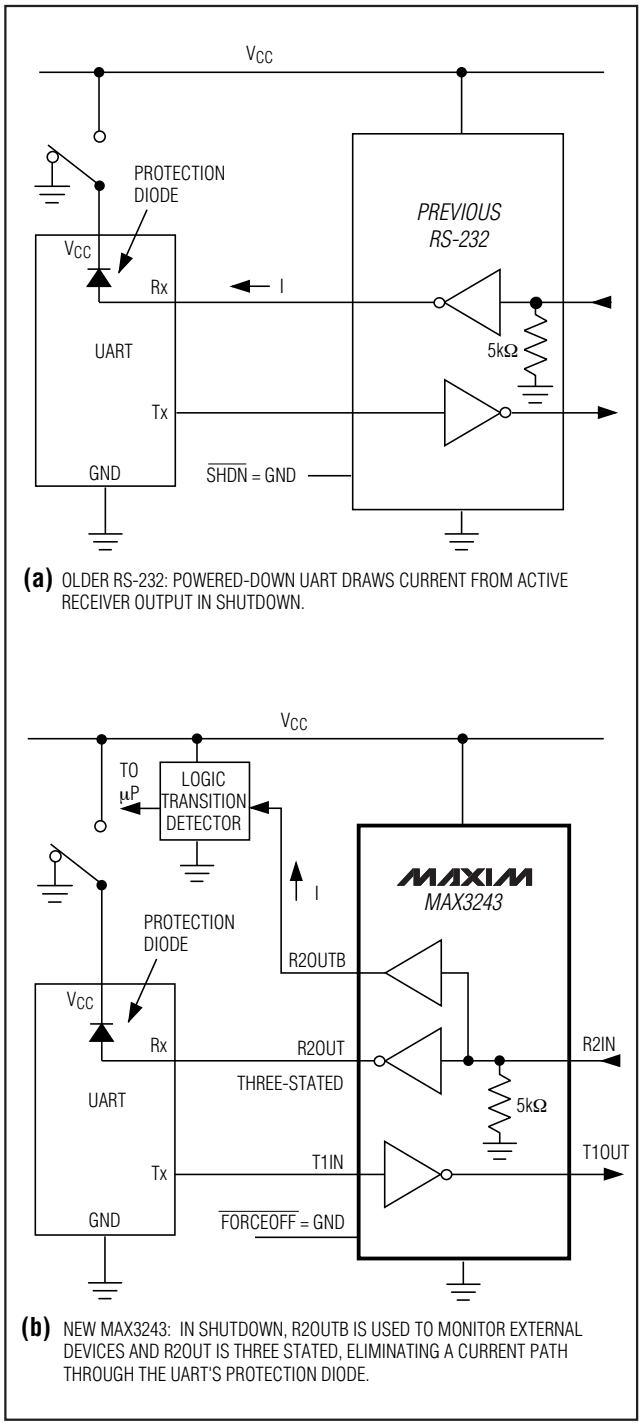

Figure 2. The MAX3243 detects RS-232 activity when the UART and interface are shut down.

RS-232 Receivers

The MAX3221/MAX3223/MAX3243's receivers convert RS-232 signals to CMOS-logic output levels. All receivers have one inverting three-state output. In shutdown ($\overline{FORCEOFF}$ = low) or in AutoShutdown, the MAX3221/MAX3223's receivers are active (Table 1). Driving $\overline{EN}$ high places the receiver(s) in a high-impedance state. The MAX3243's receivers are high impedance when the part is shut down.

The MAX3243 has an always-active complementary output (R2OUTB). R2OUTB is an extra output that monitors receiver activity while the other receivers are high impedance. This allows Ring Indicator to be monitored without forward biasing other devices connected to the receiver outputs. This is ideal for systems where V_{CC} is set to 0V in shutdown to accommodate peripherals, such as UARTs (Figure 2).

Table 1a. MAX3221/MAX3223 $\overline{\text{FORCEOFF}}$ and Enable Control Truth Table

$\overline{\text{FORCEOFF}}$	$\overline{\text{EN}}$	T_OUT	R_OUT
0	0	High-Z	Active
0	1	High-Z	High-Z
1	0	Active*	Active
1	1	Active*	High-Z

Table 1b. MAX3243 $\overline{\text{FORCEOFF}}$ Control Truth Table

$\overline{\text{FORCEOFF}}$	T_OUT	R_OUT	R2OUTB
0	High-Z	High-Z	Active
1	Active*	Active*	Active

***Note:** If the part is in AutoShutdown mode ($\overline{\text{FORCEOFF}}$ = V_{CC}, FORCEON = GND), it is shut down if no valid RS-232 levels are present on all receiver inputs.

AutoShutdown

A 1µA supply current is achieved with Maxim's new AutoShutdown feature, which operates when FORCEON is low and $\overline{\text{FORCEOFF}}$ is high. When the MAX3221/MAX3223/MAX3243 sense no valid signal levels on all receiver inputs for 30µs, the on-board power supply and drivers are shut off, reducing supply current to 1µA. This occurs if the RS-232 cable is disconnected or the connected peripheral transmitters are turned off. The system turns on again when a valid level is applied to any RS-232 receiver input. As a result, the system saves power without changes to the existing BIOS or operating system. When using AutoShutdown, the $\overline{\text{INVALID}}$ output is high when the device is on and low when the device is shut down. Because $\overline{\text{INVALID}}$ indicates the receiver inputs' condition, it can be used in any mode (Figure 3).

Table 2 and Figure 3c summarize the MAX3221/MAX3223/MAX3243 operating modes. FORCEON and $\overline{\text{FORCEOFF}}$ override the automatic circuitry and force the transceiver into its normal operating state or into its low-power standby state. When neither control is asserted, the IC selects between these states automatically based on receiver input levels. Figures 3a, 3b, and 5a depict valid and invalid RS-232 receiver levels.

A mouse or other system with AutoShutdown may need time to wake up. Figure 4 shows a circuit that forces the transmitters on for 100ms, allowing enough time for the

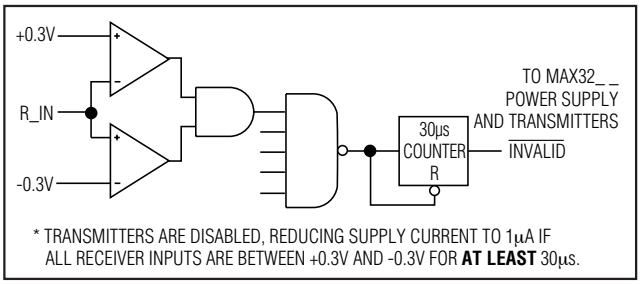

Figure 3a. MAX32_ _ Entering 1µA Supply Mode via AutoShutdown

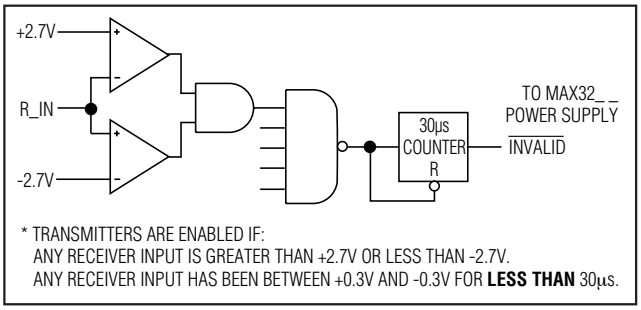

Figure 3b. MAX32_ _ with Transmitters Enabled Using AutoShutdown

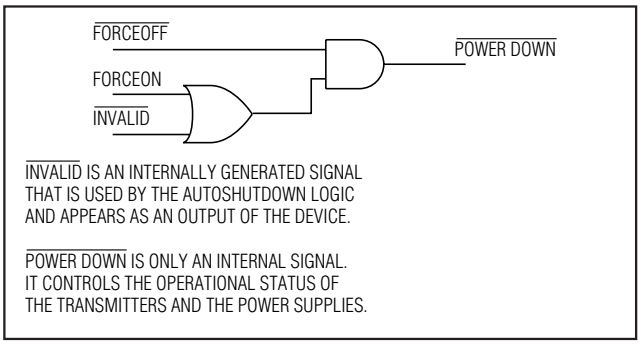

Figure 3c. AutoShutdown Logic

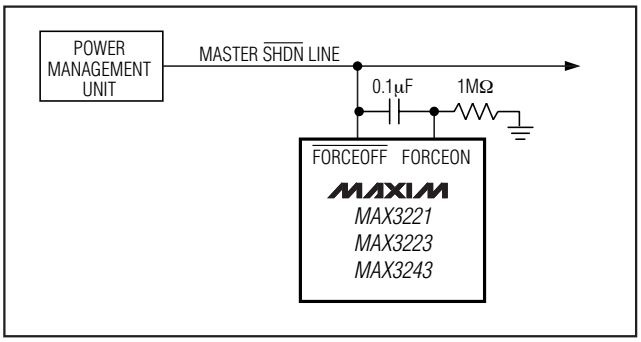

Figure 4. AutoShutdown with Initial Turn-On to Wake Up a Mouse or Another System

Table 2. AutoShutdown Logic

RS-232 SIGNAL PRESENT AT RECEIVER INPUT	$\overline{\text{FORCEOFF}}$ INPUT	FORCEON INPUT	$\overline{\text{INVALID}}$ OUTPUT	TRANSCEIVER STATUS
Yes	H	X	H	Normal Operation
No	H	H	L	Normal Operation (Forced On)
No	H	L	L	Shutdown (AutoShutdown)
Yes	L	X	H	Shutdown (Forced Off)
No	L	X	L	Shutdown (Forced Off)

other system to realize that the MAX3221/MAX3223/MAX3243 is awake. If the other system outputs valid RS-232 signals within that time, the RS-232 ports on both systems remain enabled.

When shut down, the device's charge pumps are turned off, V+ decays to V_{CC}, V- decays to ground, and the transmitter outputs are disabled (high impedance). The time required to exit shutdown is typically 100µs (Figure 5b).

Software-Controlled Shutdown

If direct software control is desired, $\overline{\text{INVALID}}$ can be used to indicate DTR or Ring Indicator signal. Tie $\overline{\text{FORCEOFF}}$ and FORCEON together to bypass AutoShutdown so the line acts like a $\overline{\text{SHDN}}$ input.

Applications Information

Capacitor Selection

The capacitor type used for C1–C4 is not critical for proper operation; either polarized or nonpolarized capacitors may be used. The charge pump requires 0.1µF capacitors for 3.3V operation. For other supply voltages, refer to Table 3 for required capacitor values. Do not use values smaller than those listed in Table 3. Increasing the capacitor values (e.g., by a factor of 2) reduces ripple on the transmitter outputs and slightly reduces power consumption. C2, C3, and C4 can be increased without changing C1's value. **However, do not increase C1 without also increasing the values of C2, C3, and C4 to maintain the proper ratios (C1 to the other capacitors).**

When using the minimum required capacitor values, make sure the capacitor value does not degrade excessively with temperature. If in doubt, use capacitors with a larger nominal value. The capacitor's equivalent series resistance (ESR) usually rises at low temperatures and influences the amount of ripple on V+ and V-.

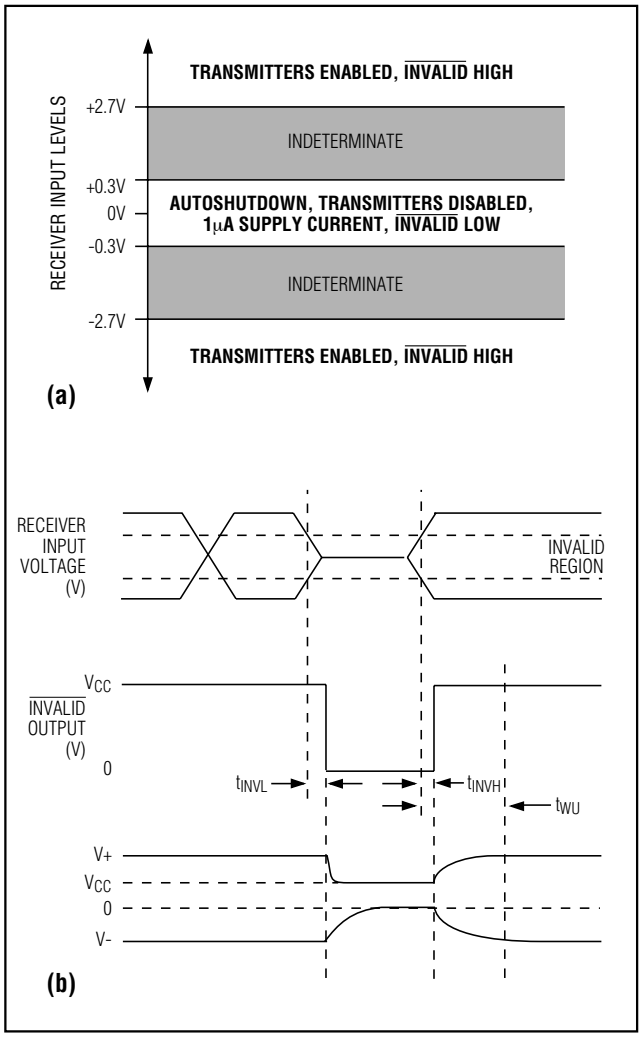

Figure 5. AutoShutdown Trip Levels

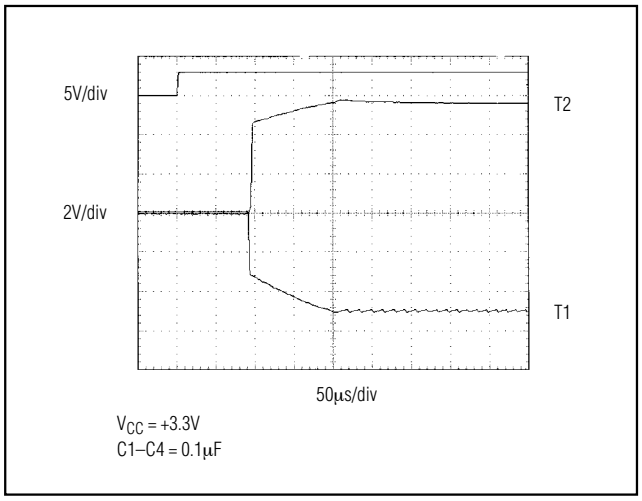

Figure 6. Transmitter Outputs when Exiting Shutdown or Powering Up

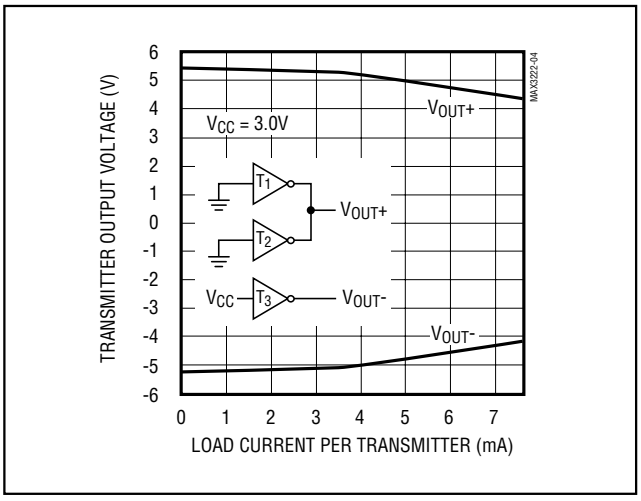

Figure 7a. MAX3243 Transmitter Output Voltage vs. Load Current per Transmitter

Power-Supply Decoupling

In most circumstances a 0.1µF bypass capacitor is adequate. In applications that are sensitive to power-supply noise, decouple V_{CC} to ground with a capacitor of the same value as the charge-pump capacitor C1. Connect bypass capacitors as close to the IC as possible.

Transmitter Outputs when Exiting Shutdown

Figure 6 shows two transmitter outputs when exiting shutdown mode. As they become active, the two transmitter outputs are shown going to opposite RS-232 levels. Each transmitter is loaded with 3kΩ in parallel with 2500pF. The transmitter outputs display no ringing or undesirable transients as they come out of shutdown. Note that the transmitters are enabled only when the magnitude of V- exceeds approximately 3V. Figure 7a shows the MAX3243's transmitter output voltage vs. current per transmitter. Figure 7b is a mouse driver test circuit.

Mouse Driveability (MAX3243)

The MAX3243 has been specifically designed to power serial mice while operating from low-voltage power supplies. It has been tested with samples of ten major mouse models from six manufacturers including the leading three: Logitech (5 models), Mouse Systems, and Microsoft. The MAX3243 successfully drove all serial mice and met their respective current and voltage requirements. Figure 7a shows the transmitter outputs under increasing load current. The MAX3243's switching regulator ensures the transmitters will supply at least ±5V during worst-case conditions. The AutoShutdown feature does not work with a mouse, so $\overline{\text{FORCEOFF}}$ and FORCEON should be connected to V_{CC}.

High Data Rates

The MAX3221/MAX3223/MAX3243 maintain the RS-232 ±5.0V minimum transmitter output voltage even at high data rates. Figure 8 shows a transmitter loopback test circuit. Figure 9 shows a loopback test result at 120kbps, and Figure 10 shows the same test at 235kbps. For Figure 9, all three transmitters were driven simultaneously at 120kbps into RS-232 loads in parallel with 1000pF. For Figure 10, a single transmitter was driven at 235kbps, but all three transmitters were loaded with an RS-232 receiver in parallel with 1000pF.

Interconnection with 3V and 5V Logic

The MAX3221/MAX3223/MAX3243 can directly interface with various 5V logic families, including ACT and HCT CMOS. See Table 4 for more information on possible combinations of interconnections.

1µA Supply-Current, True +3V to +5.5V RS-232 Transceivers with AutoShutdown

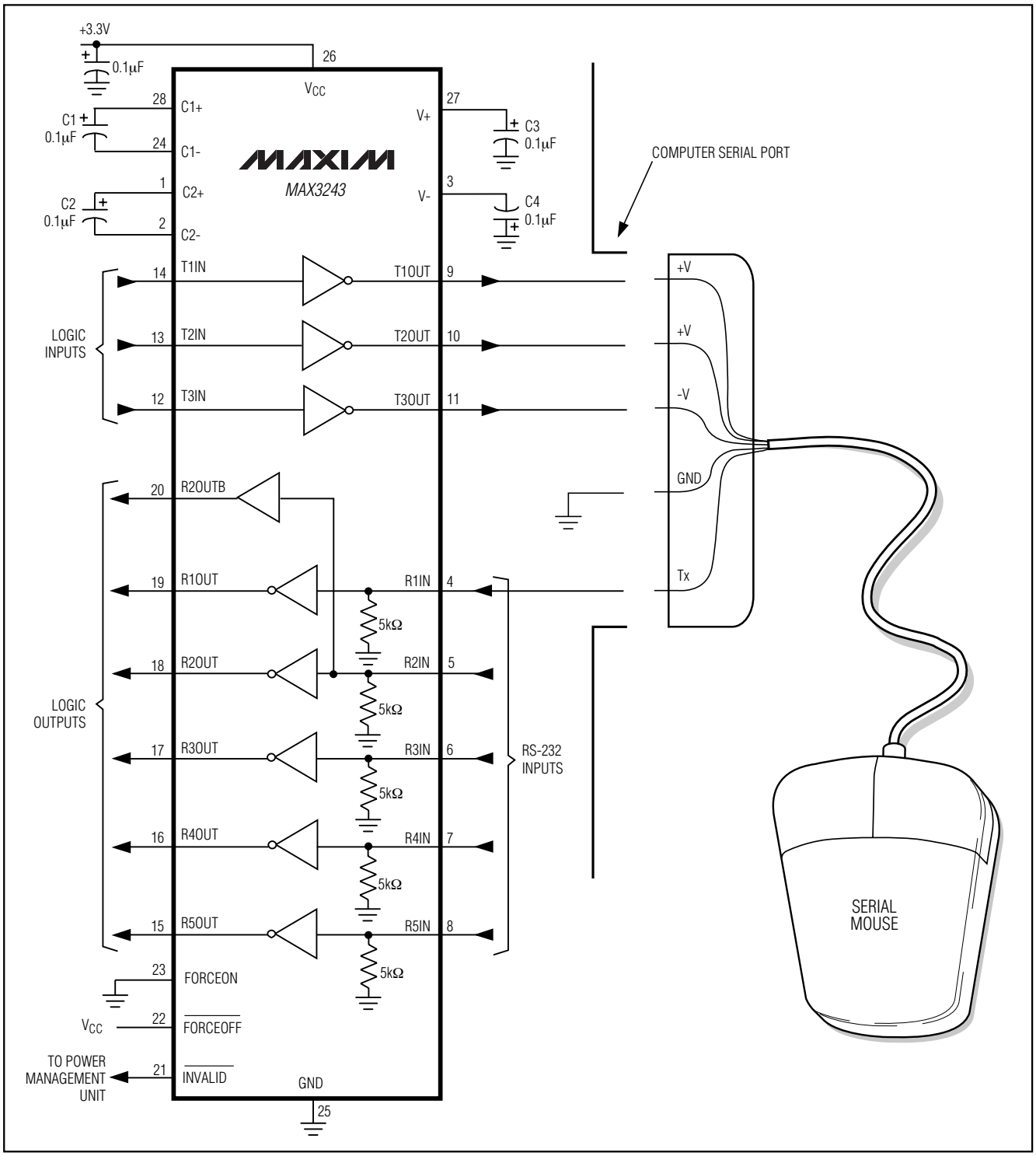

Figure 7b. Mouse Driver Test Circuit

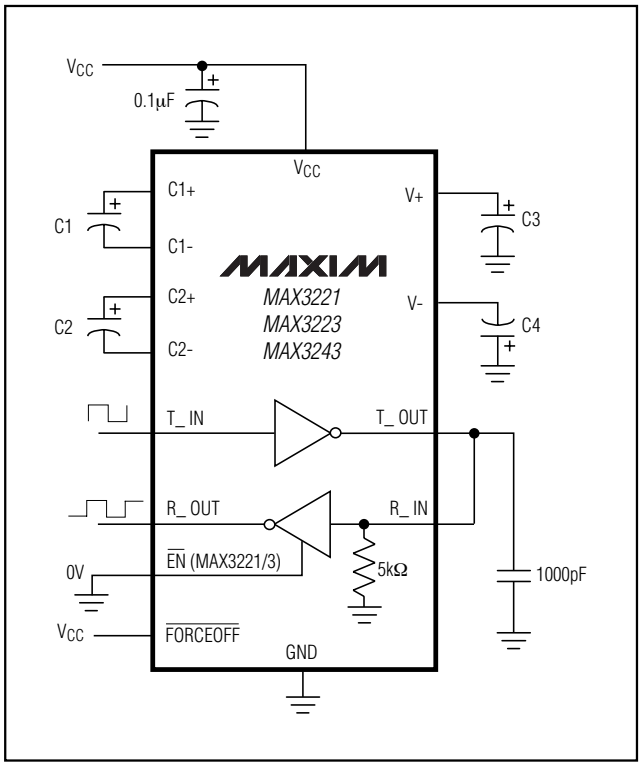

Figure 8. Loopback Test Circuit

Table 3. Required Capacitor Values

V_{CC} (V)	C1 (µF)	C2, C3, C4 (µF)
3.0 to 3.6	0.1	0.1
4.5 to 5.5	0.047	0.33
3.0 to 5.5	0.1	0.47

Table 4. Logic Family Compatibility with Various Supply Voltages

SYSTEM POWER-SUPPLY VOLTAGE (V)	V_{CC} SUPPLY VOLTAGE (V)	COMPATIBILITY
3.3	3.3	Compatible with all CMOS families.
5	5	Compatible with all TTL and CMOS-logic families.
5	3.3	Compatible with ACT and HCT CMOS, and with TTL. Incompatible with AC, HC, or CD4000 CMOS.

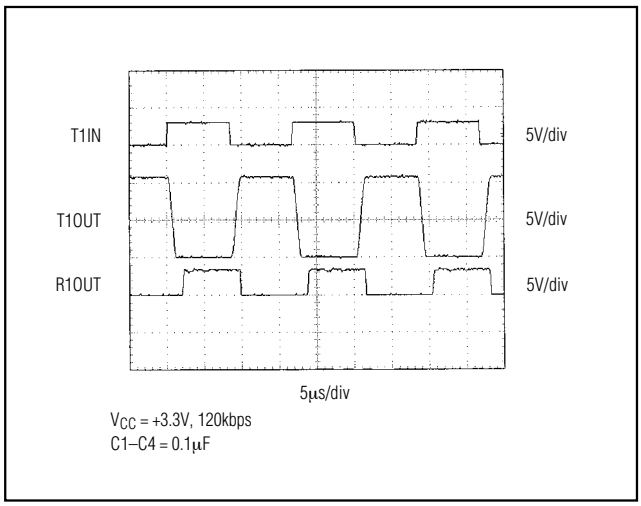

Figure 9. Loopback Test Result at 120kbps

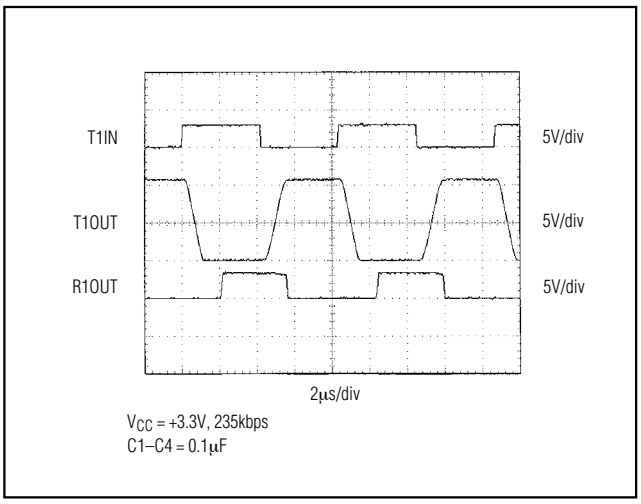

Figure 10. Loopback Test Result at 235kbps

1µA Supply-Current, True +3V to +5.5V RS-232 Transceivers with AutoShutdown

Typical Operating Circuits

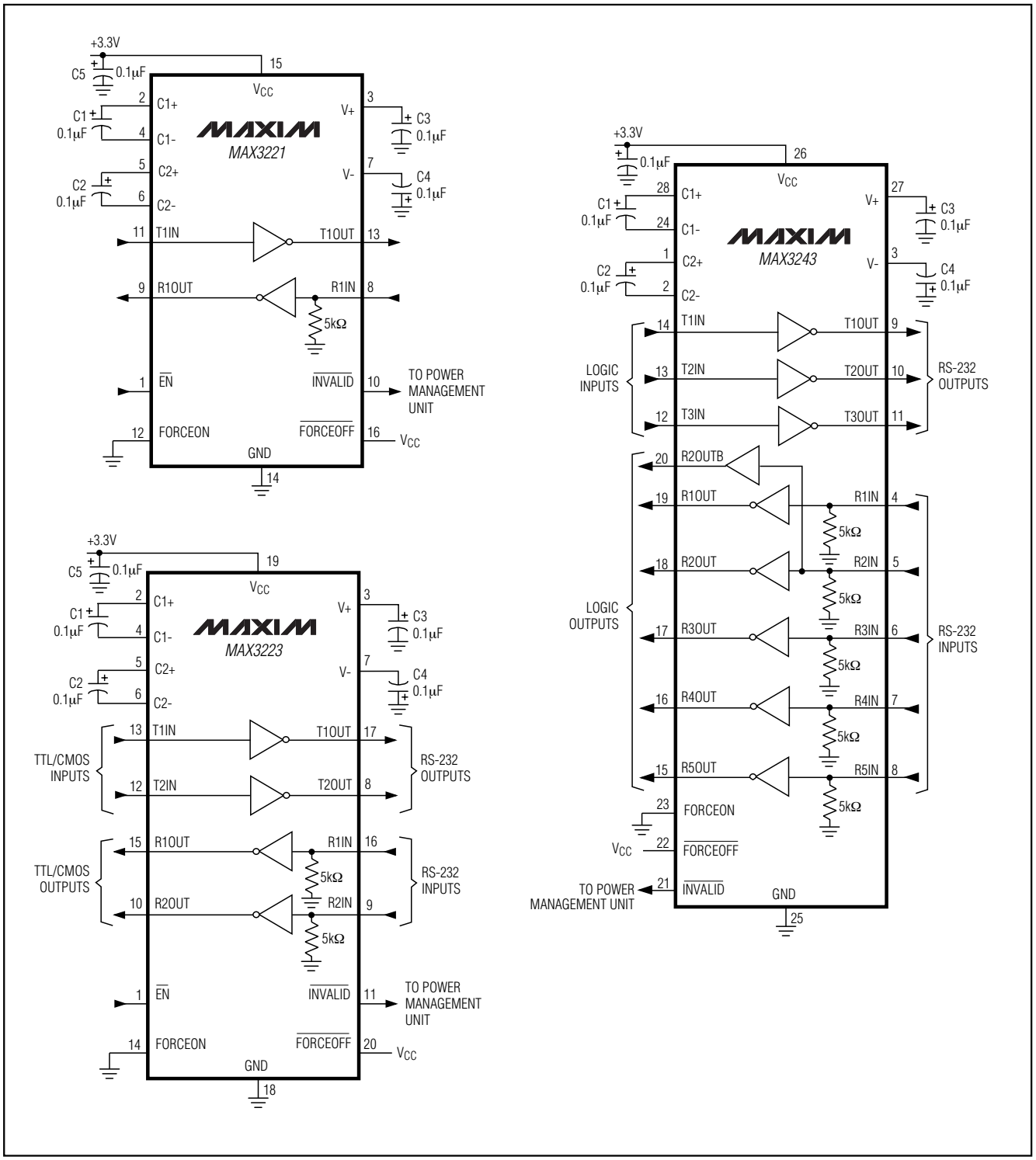

_____3V-Powered EIA/TIA-232 and EIA/TIA-562 Transceivers from Maxim

PART	POWER-SUPPLY VOLTAGE (V)	No. OF TRANSMITTERS/ RECEIVERS	No. OF RECEIVERS ACTIVE IN SHUTDOWN	GUAR-ANTEED DATA RATE (kbps)	EIA/TIA-232 OR 562	FEATURES
MAX212	3.0 to 3.6	3/5	5	120	232	Drives mice
MAX218	1.8 to 4.25	2/2	2	120	232	Operates directly from batteries without a voltage regulator
MAX562	2.7 to 5.25	3/5	5	230	562	230kbps guaranteed data rate
MAX563	3.0 to 3.6	2/2	2	120	562	0.1µF capacitors
MAX3212	2.7 to 3.6	3/5	5	235	232	AutoShutdown, complementary receiver, drives mice, transient detection
MAX3221	3.0 to 5.5	1/1	1	120	232	0.1µF capacitors, 16-pin SSOP
MAX3222	3.0 to 5.5	2/2	2	120	232	0.1µF capacitors, MAX242 pinout
MAX3223	3.0 to 5.5	2/2	2	120	232	0.1µF capacitors, AutoShutdown
MAX3232	3.0 to 5.5	2/2	N/A	120	232	0.1µF capacitors, MAX232 pinout
MAX3241	3.0 to 5.5	3/5	5	120	232	0.1µF capacitors, 2 complementary receivers, drives mice
MAX3243	3.0 to 5.5	3/5	1	120	232	0.1µF capacitors, AutoShutdown complementary receiver, drives mice

1µA Supply-Current, True +3V to +5.5V RS-232 Transceivers with AutoShutdown

Pin Configurations

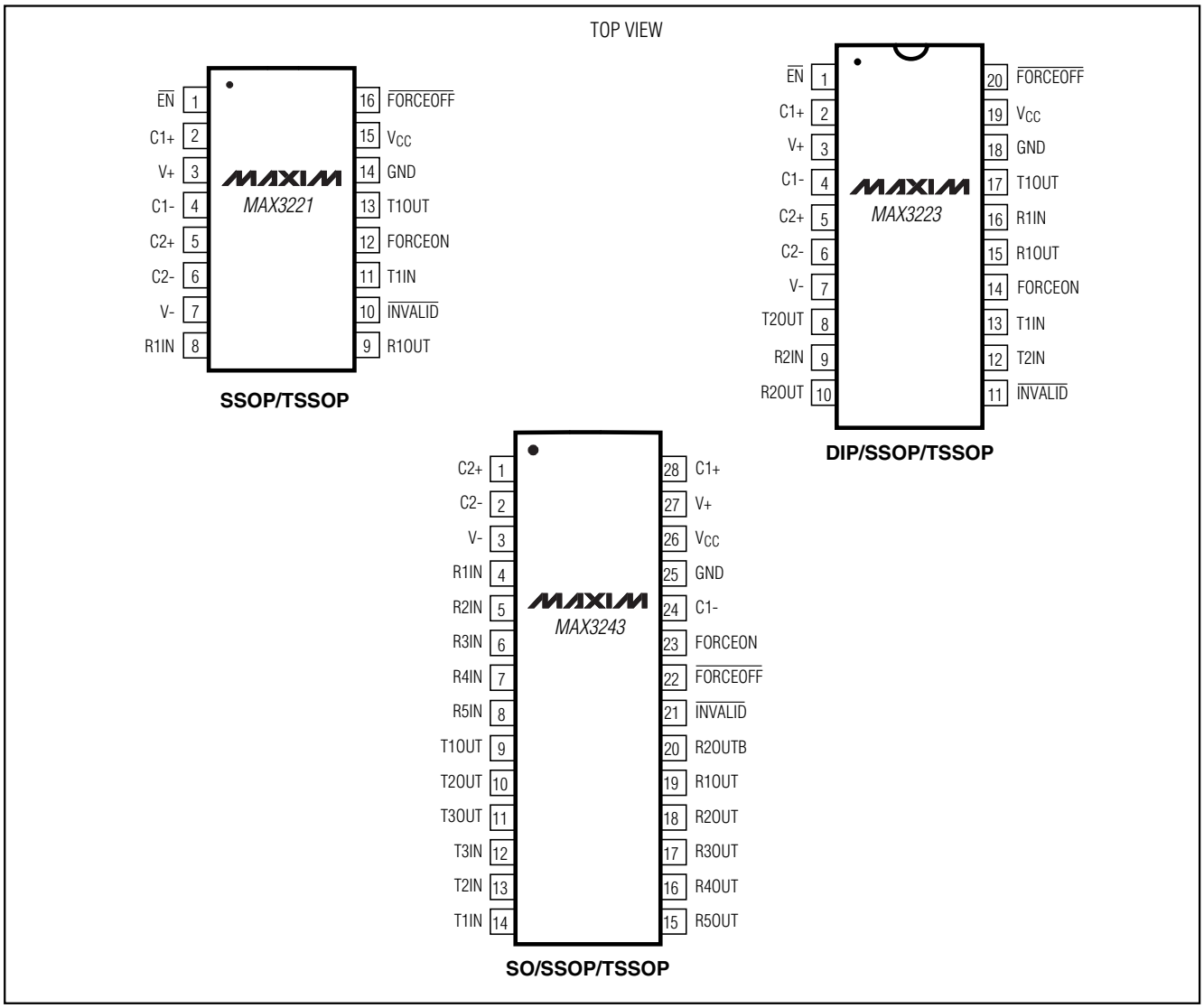

Chip Information

MAX3221 TRANSISTOR COUNT: 269

MAX3223 TRANSISTOR COUNT: 339

MAX3243 TRANSISTOR COUNT: 476

Package Information

(The package drawing(s) in this data sheet may not reflect the most current specifications. For the latest package outline information, go to **www.maxim-ic.com/packages**.)

SSOP.EPS

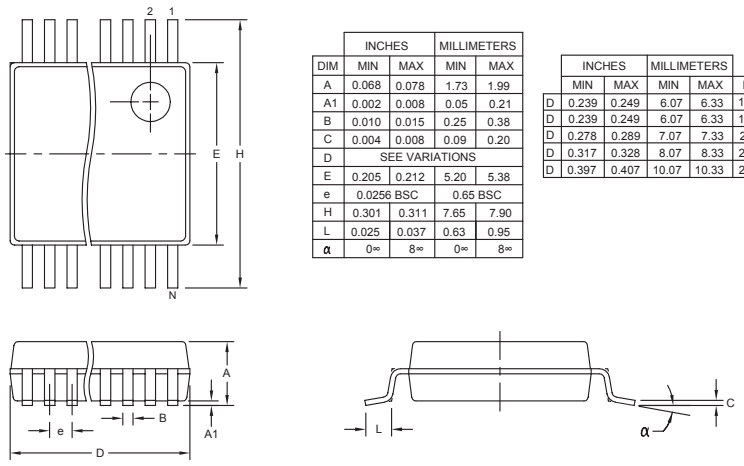

DIM	INCHES MIN	INCHES MAX	MILLIMETERS MIN	MILLIMETERS MAX
A	0.068	0.078	1.73	1.99
A1	0.002	0.008	0.05	0.21
B	0.010	0.015	0.25	0.38
C	0.004	0.008	0.09	0.20
D	SEE VARIATIONS			
E	0.205	0.212	5.20	5.38
e	0.0256 BSC		0.65 BSC	
H	0.301	0.311	7.65	7.90
L	0.025	0.037	0.63	0.95
α	0∞	8∞	0∞	8∞

	INCHES MIN	INCHES MAX	MILLIMETERS MIN	MILLIMETERS MAX	N
D	0.239	0.249	6.07	6.33	14L
D	0.239	0.249	6.07	6.33	16L
D	0.278	0.289	7.07	7.33	20L
D	0.317	0.328	8.07	8.33	24L
D	0.397	0.407	10.07	10.33	28L

NOTES:
1. D&E DO NOT INCLUDE MOLD FLASH.
2. MOLD FLASH OR PROTRUSIONS NOT TO EXCEED .15 MM (.006").
3. CONTROLLING DIMENSION: MILLIMETERS.
4. MEETS JEDEC MO150.
5. LEADS TO BE COPLANAR WITHIN 0.10 MM.

DALLAS SEMICONDUCTOR MAXIM
PROPRIETARY INFORMATION
TITLE: PACKAGE OUTLINE, SSOP, 5.3 MM
APPROVAL | DOCUMENT CONTROL NO. 21-0056 | REV. C | 1/1

TSSOP4.40mm.EPS

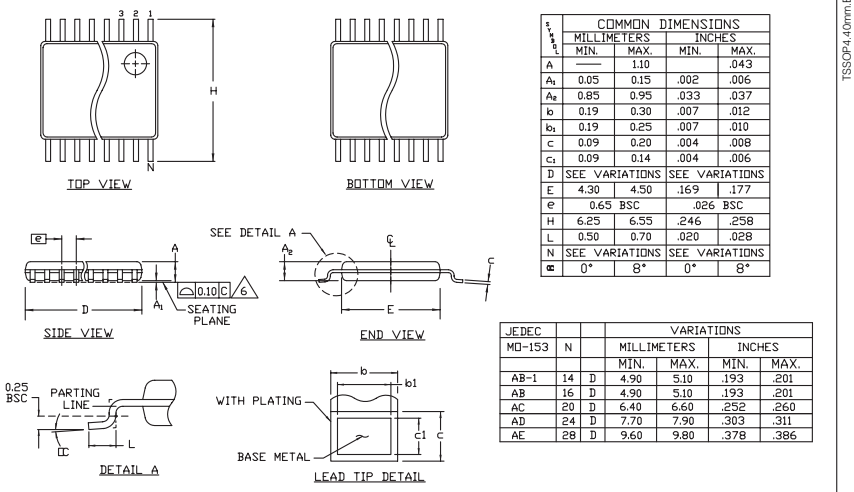

SYMBOL	COMMON DIMENSIONS MILLIMETERS MIN.	MILLIMETERS MAX.	INCHES MIN.	INCHES MAX.
A	——	1.10		.043
A_1	0.05	0.15	.002	.006
A_2	0.85	0.95	.033	.037
b	0.19	0.30	.007	.012
b_1	0.19	0.25	.007	.010
c	0.09	0.20	.004	.008
c_1	0.09	0.14	.004	.006
D	SEE VARIATIONS		SEE VARIATIONS	
E	4.30	4.50	.169	.177
e	0.65 BSC		.026 BSC	
H	6.25	6.55	.246	.258
L	0.50	0.70	.020	.028
N	SEE VARIATIONS		SEE VARIATIONS	
α	0°	8°	0°	8°

JEDEC MO-153	N		VARIATIONS MILLIMETERS MIN.	MILLIMETERS MAX.	INCHES MIN.	INCHES MAX.
AB-1	14	D	4.90	5.10	.193	.201
AB	16	D	4.90	5.10	.193	.201
AC	20	D	6.40	6.60	.252	.260
AD	24	D	7.70	7.90	.303	.311
AE	28	D	9.60	9.80	.378	.386

NOTES:
1. DIMENSIONS D AND E DO NOT INCLUDE FLASH
2. MOLD FLASH OR PROTRUSIONS NOT TO EXCEED 0.15mm PER SIDE
3. CONTROLLING DIMENSION: MILLIMETER
4. MEETS JEDEC OUTLINE MO-153. SEE JEDEC VARIATIONS TABLE
5. "N" REFERS TO NUMBER OF LEADS
6. THE LEAD TIPS MUST LIE WITHIN A SPECIFIED ZONE. THIS TOLERANCE ZONE IS DEFINED BY TWO PARALLEL PLANES. ONE PLANE IS THE SEATING PLANE, DATUM [-C-]; THE OTHER PLANE IS AT THE SPECIFIED DISTANCE FROM [-C-] IN THE DIRECTION INDICATED

DALLAS SEMICONDUCTOR MAXIM
PROPRIETARY INFORMATION
TITLE: PACKAGE OUTLINE, TSSOP 4.40mm BODY
APPROVAL | DOCUMENT CONTROL NO. 21-0066 | REV. F | 1/1

1µA Supply-Current, True +3V to +5.5V RS-232 Transceivers with AutoShutdown

Package Information (continued)

(The package drawing(s) in this data sheet may not reflect the most current specifications. For the latest package outline information, go to **www.maxim-ic.com/packages**.)

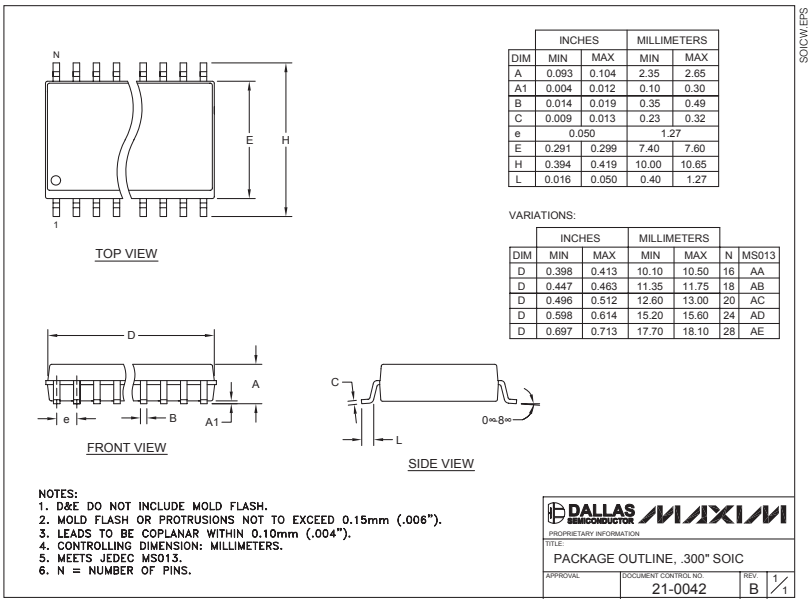

DIM	INCHES MIN	INCHES MAX	MILLIMETERS MIN	MILLIMETERS MAX
A	0.093	0.104	2.35	2.65
A1	0.004	0.012	0.10	0.30
B	0.014	0.019	0.35	0.49
C	0.009	0.013	0.23	0.32
e	0.050		1.27	
E	0.291	0.299	7.40	7.60
H	0.394	0.419	10.00	10.65
L	0.016	0.050	0.40	1.27

VARIATIONS:

DIM	INCHES MIN	INCHES MAX	MILLIMETERS MIN	MILLIMETERS MAX	N	MS013
D	0.398	0.413	10.10	10.50	16	AA
D	0.447	0.463	11.35	11.75	18	AB
D	0.496	0.512	12.60	13.00	20	AC
D	0.598	0.614	15.20	15.60	24	AD
D	0.697	0.713	17.70	18.10	28	AE

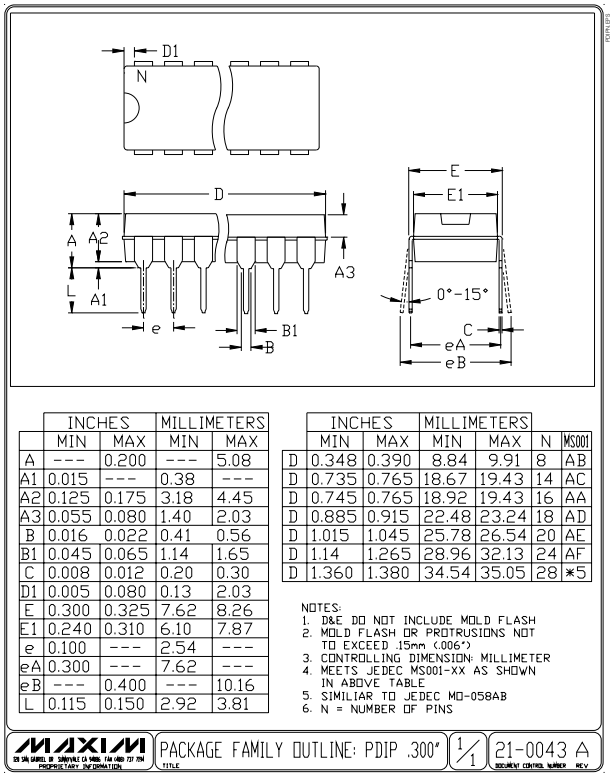

	INCHES MIN	INCHES MAX	MILLIMETERS MIN	MILLIMETERS MAX
A	---	0.200	---	5.08
A1	0.015	---	0.38	---
A2	0.125	0.175	3.18	4.45
A3	0.055	0.080	1.40	2.03
B	0.016	0.022	0.41	0.56
B1	0.045	0.065	1.14	1.65
C	0.008	0.012	0.20	0.30
D1	0.005	0.080	0.13	2.03
E	0.300	0.325	7.62	8.26
E1	0.240	0.310	6.10	7.87
e	0.100	---	2.54	---
eA	0.300	---	7.62	---
eB	---	0.400	---	10.16
L	0.115	0.150	2.92	3.81

	INCHES MIN	INCHES MAX	MILLIMETERS MIN	MILLIMETERS MAX	N	MS001
D	0.348	0.390	8.84	9.91	8	AB
D	0.735	0.765	18.67	19.43	14	AC
D	0.745	0.765	18.92	19.43	16	AA
D	0.885	0.915	22.48	23.24	18	AD
D	1.015	1.045	25.78	26.54	20	AE
D	1.14	1.265	28.96	32.13	24	AF
D	1.360	1.380	34.54	35.05	28	*5

Maxim cannot assume responsibility for use of any circuitry other than circuitry entirely embodied in a Maxim product. No circu it patent licenses are implied. Maxim reserves the right to change the circuitry and specifications without notice at any time.

© 2003 Maxim Integrated Products Printed USA MAXIM is a registered trademark of Maxim Integrated Products.

ООО «ЛайфЭлектроникс» “LifeElectronics” LLC

ИНН 7805602321 КПП 780501001 Р/С 40702810122510004610 ФАКБ "АБСОЛЮТ БАНК" (ЗАО) в г.Санкт-Петербурге К/С 30101810900000000703 БИК 044030703

Компания «Life Electronics» занимается поставками электронных компонентов импортного и отечественного производства от производителей и со складов крупных дистрибьюторов Европы, Америки и Азии.

С конца 2013 года компания активно расширяет линейку поставок компонентов по направлению коаксиальный кабель, кварцевые генераторы и конденсаторы (керамические, пленочные, электролитические), за счёт заключения дистрибьюторских договоров

Мы предлагаем:

- *Конкурентоспособные цены и скидки постоянным клиентам.*
- *Специальные условия для постоянных клиентов.*
- *Подбор аналогов.*
- *Поставку компонентов в любых объемах, удовлетворяющих вашим потребностям.*

- *Приемлемые сроки поставки, возможна ускоренная поставка.*
- *Доставку товара в любую точку России и стран СНГ.*
- *Комплексную поставку.*
- *Работу по проектам и поставку образцов.*
- *Формирование склада под заказчика.*

- *Сертификаты соответствия на поставляемую продукцию (по желанию клиента).*
- *Тестирование поставляемой продукции.*
- *Поставку компонентов, требующих военную и космическую приемку.*
- *Входной контроль качества.*
- *Наличие сертификата ISO.*

В составе нашей компании организован Конструкторский отдел, призванный помогать разработчикам, и инженерам.

Конструкторский отдел помогает осуществить:

- *Регистрацию проекта у производителя компонентов.*
- *Техническую поддержку проекта.*
- *Защиту от снятия компонента с производства.*
- *Оценку стоимости проекта по компонентам.*
- *Изготовление тестовой платы монтаж и пусконаладочные работы.*

Тел: +7 (812) 336 43 04 (многоканальный)
Email: org@lifeelectronics.ru

www.lifeelectronics.ru