LPC2131/32/34/36/38

Single-chip 16/32-bit microcontrollers; 32/64/128/256/512 kB ISP/IAP flash with 10-bit ADC and DAC

Rev. 5.1 — 29 July 2011 Product data sheet

1. General description

The LPC2131/32/34/36/38 microcontrollers are based on a 16/32-bit ARM7TDMI-S CPU with real-time emulation and embedded trace support, that combine the microcontroller with 32 kB, 64 kB, 128 kB, 256 kB and 512 kB of embedded high-speed flash memory. A 128-bit wide memory interface and a unique accelerator architecture enable 32-bit code execution at maximum clock rate. For critical code size applications, the alternative 16-bit Thumb mode reduces code by more than 30 % with minimal performance penalty.

Due to their tiny size and low power consumption, these microcontrollers are ideal for applications where miniaturization is a key requirement, such as access control and point-of-sale. With a wide range of serial communications interfaces and on-chip SRAM options of 8 kB, 16 kB, and 32 kB, they are very well suited for communication gateways and protocol converters, soft modems, voice recognition and low-end imaging, providing both large buffer size and high processing power. Various 32-bit timers, single or dual 10-bit 8-channel ADC(s), 10-bit DAC, PWM channels and 47 GPIO lines with up to nine edge or level sensitive external interrupt pins make these microcontrollers particularly suitable for industrial control and medical systems.

2. Features and benefits

2.1 Enhancements brought by LPC213x/01 devices

- Fast GPIO ports enable port pin toggling up to 3.5 times faster than the original LPC213x. They also allow for a port pin to be read at any time regardless of its function.
- Dedicated result registers for ADC(s) reduce interrupt overhead.
- UART0/1 include fractional baud rate generator, auto-bauding capabilities and handshake flow-control fully implemented in hardware.
- Additional BOD control enables further reduction of power consumption.

2.2 Key features common for LPC213x and LPC213x/01

- 16/32-bit ARM7TDMI-S microcontroller in a tiny LQFP64 or HVQFN64 package.
- 8/16/32 kB of on-chip static RAM and 32/64/128/256/512 kB of on-chip flash program memory. 128-bit wide interface/accelerator enables high-speed 60 MHz operation.
- In-System Programming/In-Application Programming (ISP/IAP) via on-chip bootloader software. Single flash sector or full chip erase in 400 ms and programming of 256 B in 1 ms.
- EmbeddedICE RT and Embedded Trace interfaces offer real-time debugging with the on-chip RealMonitor software and high-speed tracing of instruction execution.

- One (LPC2131/32) or two (LPC2134/36/38) 8-channel 10-bit ADCs provide a total of up to 16 analog inputs, with conversion times as low as 2.44 μs per channel.
- Single 10-bit DAC provides variable analog output (LPC2132/34/36/38).
- Two 32-bit timers/external event counters (with four capture and four compare channels each), PWM unit (six outputs) and watchdog.
- Low power Real-time clock with independent power and dedicated 32 kHz clock input.
- Multiple serial interfaces including two UARTs (16C550), two Fast I^2C-bus (400 kbit/s), SPI and SSP with buffering and variable data length capabilities.
- Vectored interrupt controller with configurable priorities and vector addresses.
- Up to forty-seven 5 V tolerant general purpose I/O pins in tiny LQFP64 or HVQFN package.
- Up to nine edge or level sensitive external interrupt pins available.
- 60 MHz maximum CPU clock available from programmable on-chip PLL with settling time of 100 μs.
- On-chip integrated oscillator operates with external crystal in range of 1 MHz to 30 MHz and with external oscillator up to 50 MHz.
- Power saving modes include Idle and Power-down.
- Individual enable/disable of peripheral functions as well as peripheral clock scaling down for additional power optimization.
- Processor wake-up from Power-down mode via external interrupt or BOD.
- Single power supply chip with POR and BOD circuits:
  - CPU operating voltage range of 3.0 V to 3.6 V (3.3 V ± 10 %) with 5 V tolerant I/O pads.

3. Ordering information

Table 1. Ordering information

Type number	Package		
	Name	Description	Version
LPC2131FBD64/01	LQFP64	plastic low profile quad flat package; 64 leads; body 10 × 10 × 1.4 mm	SOT314-2
LPC2132FBD64/01	LQFP64	plastic low profile quad flat package; 64 leads; body 10 × 10 × 1.4 mm	SOT314-2
LPC2132FHN64/01	HVQFN64	plastic thermal enhanced very thin quad flat package; no leads; 64 terminals; body 9 × 9 × 0.85 mm	SOT804-2
LPC2134FBD64/01	LQFP64	plastic low profile quad flat package; 64 leads; body 10 × 10 × 1.4 mm	SOT314-2
LPC2136FBD64/01	LQFP64	plastic low profile quad flat package; 64 leads; body 10 × 10 × 1.4 mm	SOT314-2
LPC2138FBD64/01	LQFP64	plastic low profile quad flat package; 64 leads; body 10 × 10 × 1.4 mm	SOT314-2
LPC2138FHN64/01	HVQFN64	plastic thermal enhanced very thin quad flat package; no leads; 64 terminals; body 9 × 9 × 0.85 mm	SOT804-2

All information provided in this document is subject to legal disclaimers.

© NXP B.V. 2011. All rights reserved.

3.1 Ordering options

Table 2. Ordering options

Type number	Flash memory	RAM	ADC	DAC	Enhanced UARTs, ADC, Fast I/Os, and BOD	Temperature range
LPC2131FBD64/01	32 kB	8 kB	1	-	yes	−40 °C to +85 °C
LPC2132FBD64/01	64 kB	16 kB	1	1	yes	−40 °C to +85 °C
LPC2132FHN64/01	64 kB	16 kB	1	1	yes	−40 °C to +85 °C
LPC2134FBD64/01	128 kB	16 kB	2	1	yes	−40 °C to +85 °C
LPC2136FBD64/01	256 kB	32 kB	2	1	yes	−40 °C to +85 °C
LPC2138FBD64/01	512 kB	32 kB	2	1	yes	−40 °C to +85 °C
LPC2138FHN64/01	512 kB	32 kB	2	1	yes	−40 °C to +85 °C

All information provided in this document is subject to legal disclaimers.

© NXP B.V. 2011. All rights reserved.

4. Block diagram

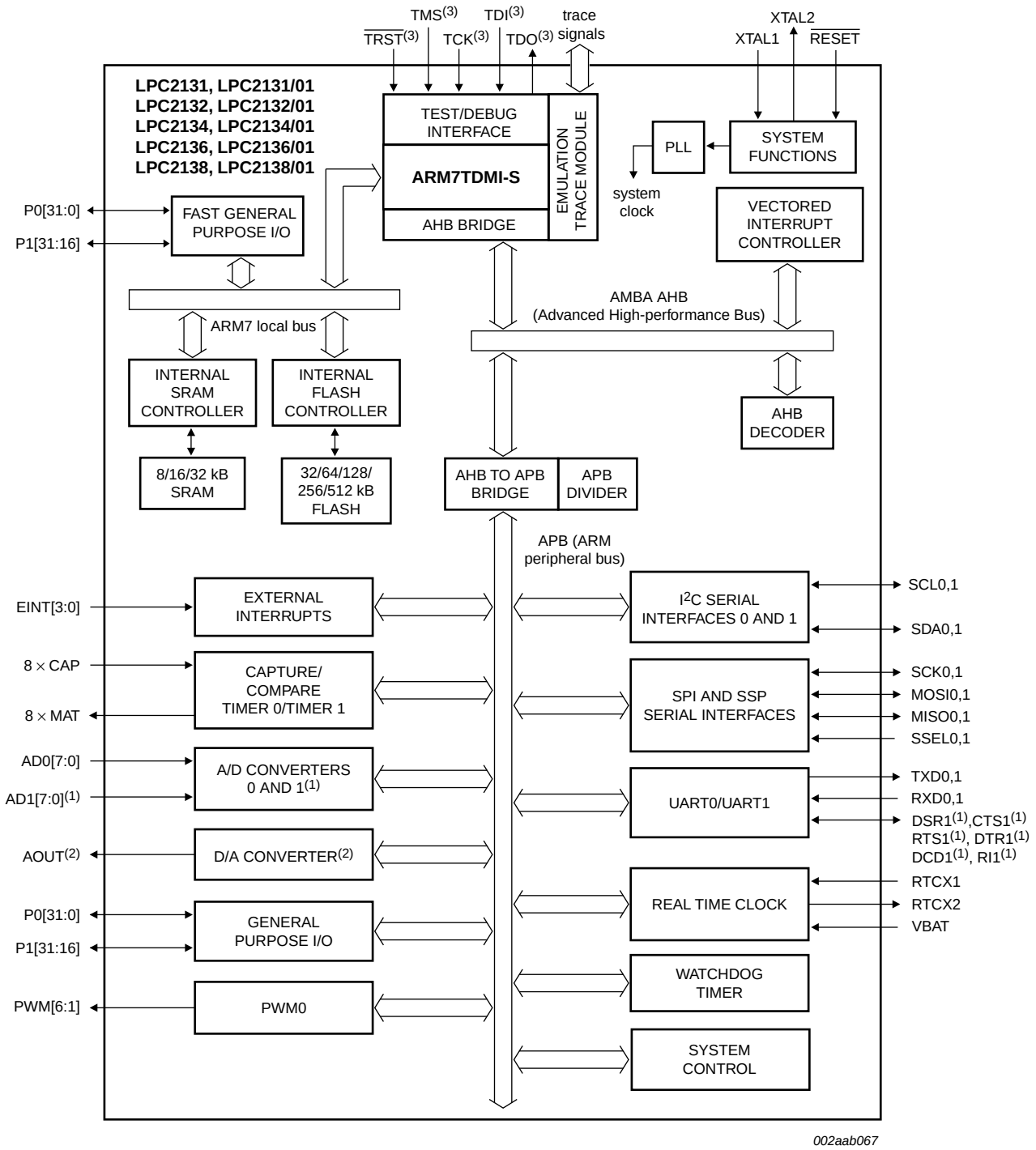

(1) LPC2134/36/38 only.

(2) LPC2132/34/36/38 only.

(3) Pins shared with GPIO.

Fig 1. Block diagram

All information provided in this document is subject to legal disclaimers.

© NXP B.V. 2011. All rights reserved.

5. Pinning information

5.1 Pinning

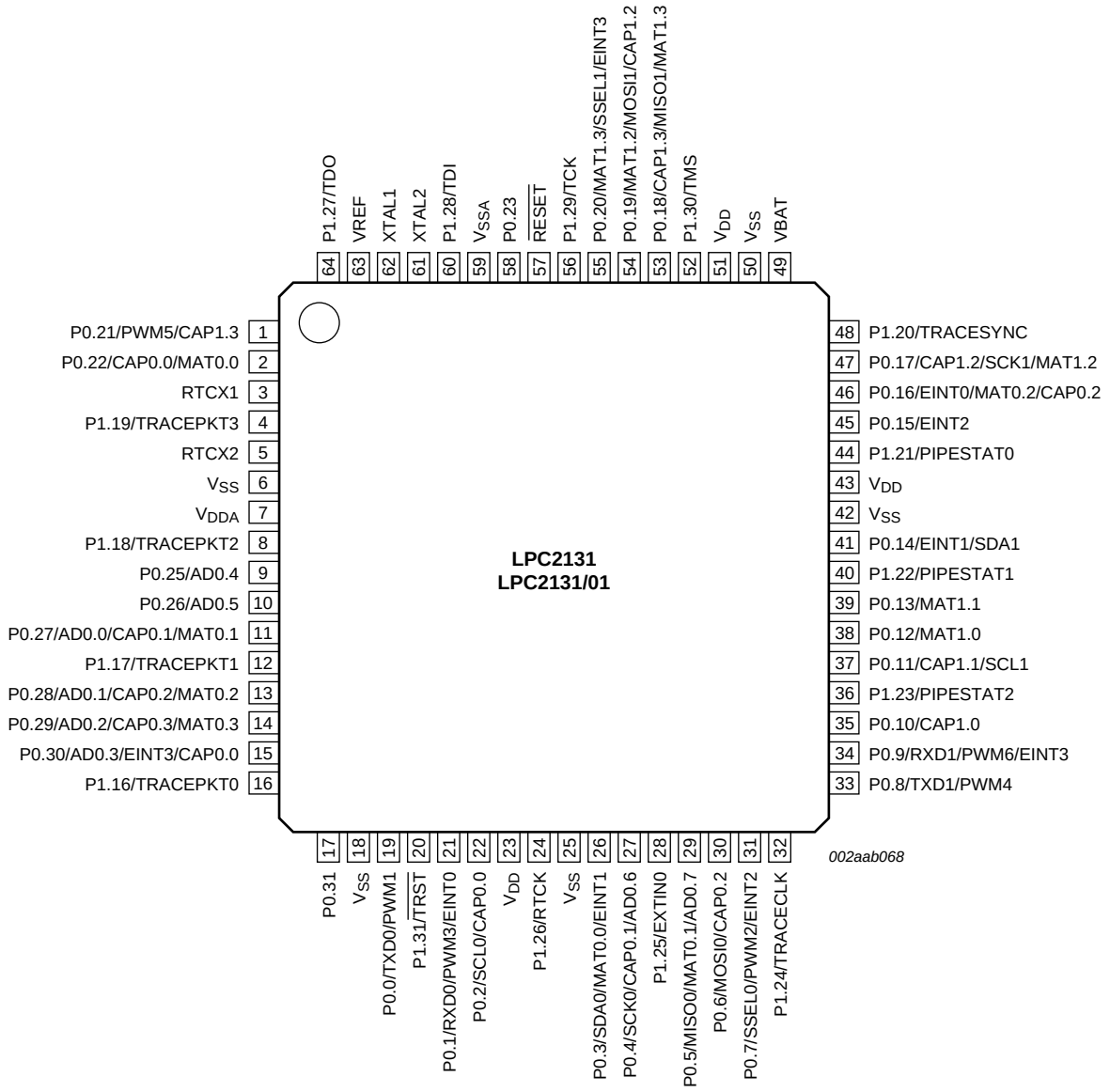

Fig 2. LPC2131 LQFP64 pin configuration

All information provided in this document is subject to legal disclaimers.

© NXP B.V. 2011. All rights reserved.

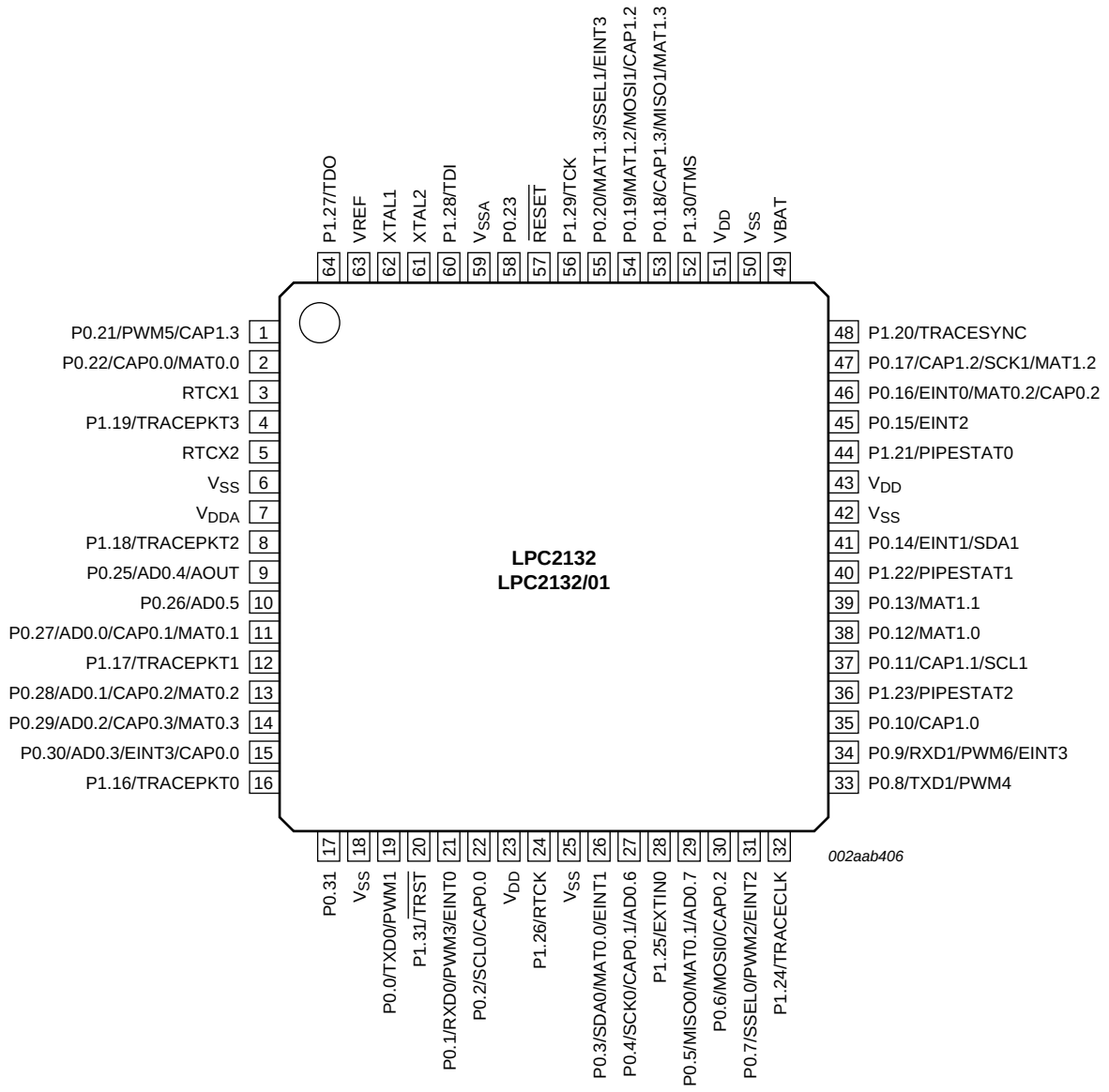

Fig 3. LPC2132 LQFP64 pin configuration

All information provided in this document is subject to legal disclaimers.

© NXP B.V. 2011. All rights reserved.

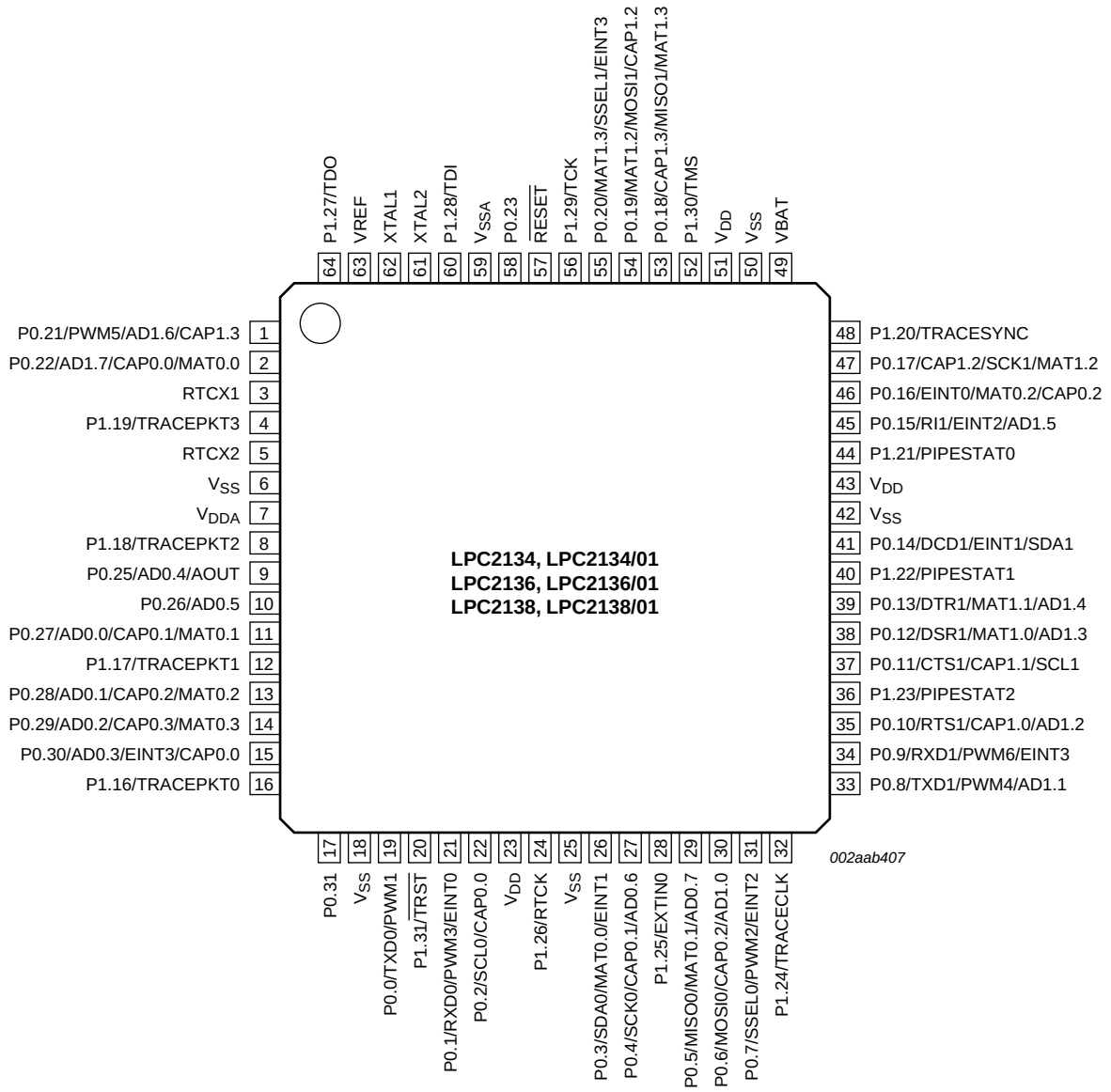

Fig 4. LPC2134/36/38 LQFP64 pin configuration

All information provided in this document is subject to legal disclaimers.

© NXP B.V. 2011. All rights reserved.

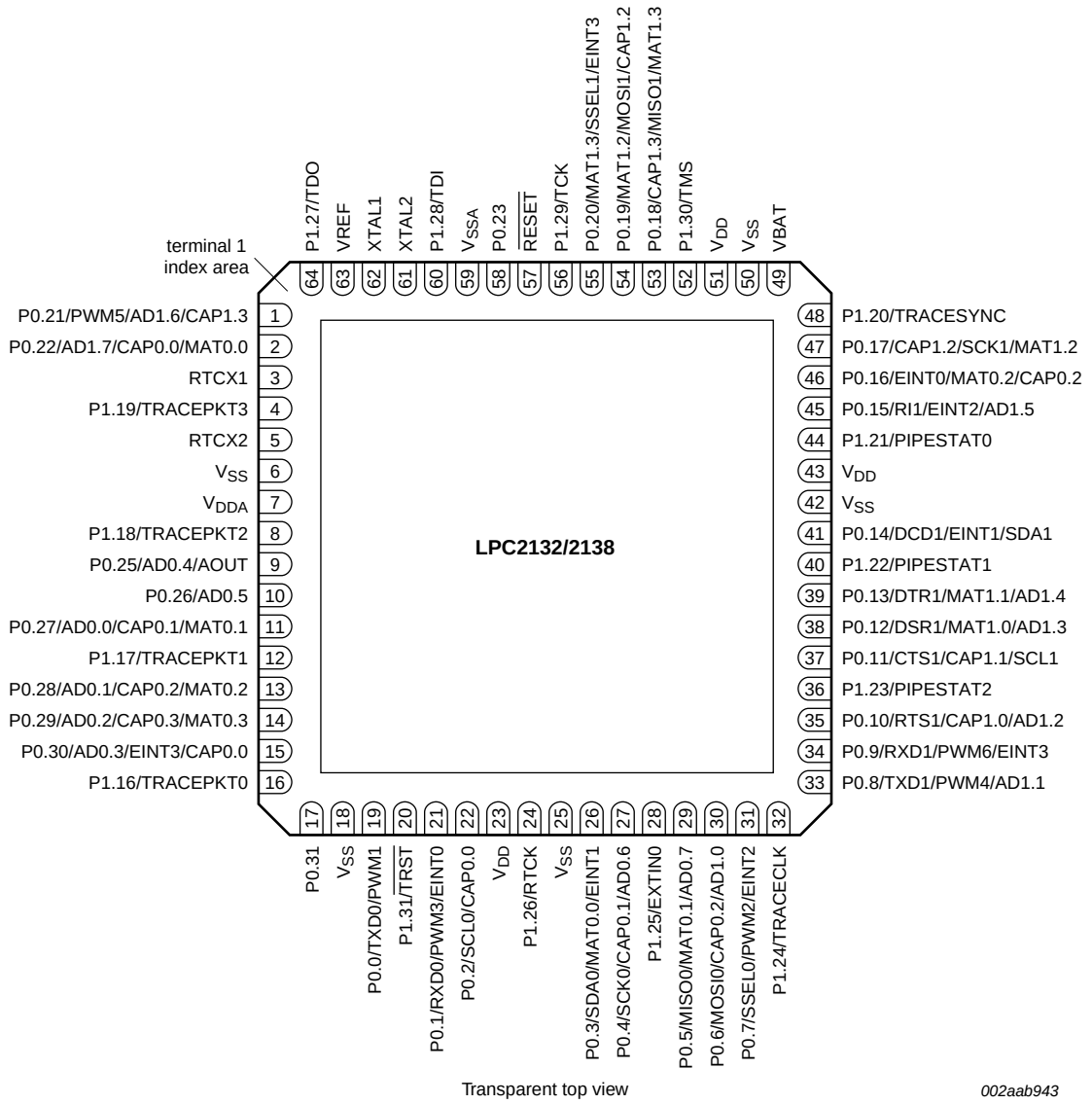

AD1.7 to AD1.0 only available on LPC2134/36/38.

Fig 5. LPC2132/38 HVQFN64 pin configuration

All information provided in this document is subject to legal disclaimers.

© NXP B.V. 2011. All rights reserved.

5.2 Pin description

Table 3. Pin description

Symbol	Pin	Type	Description
P0.0 to P0.31		I/O	**Port 0:** Port 0 is a 32-bit I/O port with individual direction controls for each bit. Total of 31 pins of the Port 0 can be used as a general purpose bidirectional digital I/Os while P0.31 is output only pin. The operation of port 0 pins depends upon the pin function selected via the pin connect block. Pin P0.24 is not available.
P0.0/TXD0/ PWM1	19[1]	O	**TXD0 —** Transmitter output for UART0.
		O	**PWM1 —** Pulse Width Modulator output 1.
P0.1/RXD0/ PWM3/EINT0	21[2]	I	**RXD0 —** Receiver input for UART0.
		O	**PWM3 —** Pulse Width Modulator output 3.
		I	**EINT0 —** External interrupt 0 input.
P0.2/SCL0/ CAP0.0	22[3]	I/O	**SCL0 —** I^2C0 clock input/output. Open drain output (for I^2C-bus compliance).
		I	**CAP0.0 —** Capture input for Timer 0, channel 0.
P0.3/SDA0/ MAT0.0/EINT1	26[3]	I/O	**SDA0 —** I^2C0 data input/output. Open drain output (for I^2C-bus compliance).
		O	**MAT0.0 —** Match output for Timer 0, channel 0.
		I	**EINT1 —** External interrupt 1 input.
P0.4/SCK0/ CAP0.1/AD0.6	27[4]	I/O	**SCK0 —** Serial clock for SPI0. SPI clock output from master or input to slave.
		I	**CAP0.1 —** Capture input for Timer 0, channel 1.
		I	**AD0.6 —** ADC 0, input 6. This analog input is always connected to its pin.
P0.5/MISO0/ MAT0.1/AD0.7	29[4]	I/O	**MISO0 —** Master In Slave V_{DD} = 3.6 V for SPI0. Data input to SPI master or data output from SPI slave.
		O	**MAT0.1 —** Match output for Timer 0, channel 1.
		I	**AD0.7 —** ADC 0, input 7. This analog input is always connected to its pin.
P0.6/MOSI0/ CAP0.2/AD1.0	30[4]	I/O	**MOSI0 —** Master Out Slave In for SPI0. Data output from SPI master or data input to SPI slave.
		I	**CAP0.2 —** Capture input for Timer 0, channel 2.
		I	**AD1.0 —** ADC 1, input 0. This analog input is always connected to its pin. Available in LPC2134/36/38 only.
P0.7/SSEL0/ PWM2/EINT2	31[2]	I	**SSEL0 —** Slave Select for SPI0. Selects the SPI interface as a slave.
		O	**PWM2 —** Pulse Width Modulator output 2.
		I	**EINT2 —** External interrupt 2 input.
P0.8/TXD1/ PWM4/AD1.1	33[4]	O	**TXD1 —** Transmitter output for UART1.
		O	**PWM4 —** Pulse Width Modulator output 4.
		I	**AD1.1 —** ADC 1, input 1. This analog input is always connected to its pin. Available in LPC2134/36/38 only.
P0.9/RXD1/ PWM6/EINT3	34[2]	I	**RXD1 —** Receiver input for UART1.
		O	**PWM6 —** Pulse Width Modulator output 6.
		I	**EINT3 —** External interrupt 3 input.
P0.10/RTS1/ CAP1.0/AD1.2	35[4]	O	**RTS1 —** Request to Send output for UART1. Available in LPC2134/36/38.
		I	**CAP1.0 —** Capture input for Timer 1, channel 0.
		I	**AD1.2 —** ADC 1, input 2. This analog input is always connected to its pin. Available in LPC2134/36/38 only.

All information provided in this document is subject to legal disclaimers.

© NXP B.V. 2011. All rights reserved.

Table 3. Pin description *...continued*

Symbol	Pin	Type	Description
P0.11/CTS1/ CAP1.1/SCL1	37[3]	I	**CTS1 —** Clear to Send input for UART1. Available in LPC2134/36/38.
		I	**CAP1.1 —** Capture input for Timer 1, channel 1.
		I/O	**SCL1 —** I^2C1 clock input/output. Open drain output (for I^2C-bus compliance)
P0.12/DSR1/ MAT1.0/AD1.3	38[4]	I	**DSR1 —** Data Set Ready input for UART1. Available in LPC2134/36/38.
		O	**MAT1.0 —** Match output for Timer 1, channel 0.
		I	**AD1.3 —** ADC 1, input 3. This analog input is always connected to its pin. Available in LPC2134/36/38 only.
P0.13/DTR1/ MAT1.1/AD1.4	39[4]	O	**DTR1 —** Data Terminal Ready output for UART1. Available in LPC2134/36/38.
		O	**MAT1.1 —** Match output for Timer 1, channel 1.
		I	**AD1.4 —** ADC 1, input 4. This analog input is always connected to its pin. Available in LPC2134/36/38 only.
P0.14/DCD1/ EINT1/SDA1	41[3]	I	**DCD1 —** Data Carrier Detect input for UART1. Available in LPC2134/36/38.
		I	**EINT1 —** External interrupt 1 input.
		I/O	**SDA1 —** I^2C1 data input/output. Open drain output (for I^2C-bus compliance).
P0.15/RI1/ EINT2/AD1.5	45[4]	I	**RI1 —** Ring Indicator input for UART1. Available in LPC2134/36/38.
		I	**EINT2 —** External interrupt 2 input.
		I	**AD1.5 —** ADC 1, input 5. This analog input is always connected to its pin. Available in LPC2134/36/38 only.
P0.16/EINT0/ MAT0.2/CAP0.2	46[2]	I	**EINT0 —** External interrupt 0 input.
		O	**MAT0.2 —** Match output for Timer 0, channel 2.
		I	**CAP0.2 —** Capture input for Timer 0, channel 2.
P0.17/CAP1.2/ SCK1/MAT1.2	47[1]	I	**CAP1.2 —** Capture input for Timer 1, channel 2.
		I/O	**SCK1 —** Serial Clock for SSP. Clock output from master or input to slave.
		O	**MAT1.2 —** Match output for Timer 1, channel 2.
P0.18/CAP1.3/ MISO1/MAT1.3	53[1]	I	**CAP1.3 —** Capture input for Timer 1, channel 3.
		I/O	**MISO1 —** Master In Slave Out for SSP. Data input to SPI master or data output from SSP slave.
		O	**MAT1.3 —** Match output for Timer 1, channel 3.
P0.19/MAT1.2/ MOSI1/CAP1.2	54[1]	O	**MAT1.2 —** Match output for Timer 1, channel 2.
		I/O	**MOSI1 —** Master Out Slave In for SSP. Data output from SSP master or data input to SSP slave.
		I	**CAP1.2 —** Capture input for Timer 1, channel 2.
P0.20/MAT1.3/ SSEL1/EINT3	55[2]	O	**MAT1.3 —** Match output for Timer 1, channel 3.
		I	**SSEL1 —** Slave Select for SSP. Selects the SSP interface as a slave.
		I	**EINT3 —** External interrupt 3 input.
P0.21/PWM5/ AD1.6/CAP1.3	1[4]	O	**PWM5 —** Pulse Width Modulator output 5.
		I	**AD1.6 —** ADC 1, input 6. This analog input is always connected to its pin. Available in LPC2134/36/38 only.
		I	**CAP1.3 —** Capture input for Timer 1, channel 3.
P0.22/AD1.7/ CAP0.0/MAT0.0	2[4]	I	**AD1.7 —** ADC 1, input 7. This analog input is always connected to its pin. Available in LPC2134/36/38 only.
		I	**CAP0.0 —** Capture input for Timer 0, channel 0.
		O	**MAT0.0 —** Match output for Timer 0, channel 0.

All information provided in this document is subject to legal disclaimers.

© NXP B.V. 2011. All rights reserved.

Table 3. Pin description *...continued*

Symbol	Pin	Type	Description
P0.23	58[1]	I/O	General purpose digital input/output pin.
P0.25/AD0.4/ AOUT	9[5]	I	**AD0.4 —** ADC 0, input 4. This analog input is always connected to its pin.
		O	**AOUT —** DAC output. Not available in LPC2131.
P0.26/AD0.5	10[4]	I	**AD0.5 —** ADC 0, input 5. This analog input is always connected to its pin.
P0.27/AD0.0/ CAP0.1/MAT0.1	11[4]	I	**AD0.0 —** ADC 0, input 0. This analog input is always connected to its pin.
		I	**CAP0.1 —** Capture input for Timer 0, channel 1.
		O	**MAT0.1 —** Match output for Timer 0, channel 1.
P0.28/AD0.1/ CAP0.2/MAT0.2	13[4]	I	**AD0.1 —** ADC 0, input 1. This analog input is always connected to its pin.
		I	**CAP0.2 —** Capture input for Timer 0, channel 2.
		O	**MAT0.2 —** Match output for Timer 0, channel 2.
P0.29/AD0.2/ CAP0.3/MAT0.3	14[4]	I	**AD0.2 —** ADC 0, input 2. This analog input is always connected to its pin.
		I	**CAP0.3 —** Capture input for Timer 0, channel 3.
		O	**MAT0.3 —** Match output for Timer 0, channel 3.
P0.30/AD0.3/ EINT3/CAP0.0	15[4]	I	**AD0.3 —** ADC 0, input 3. This analog input is always connected to its pin.
		I	**EINT3 —** External interrupt 3 input.
		I	**CAP0.0 —** Capture input for Timer 0, channel 0.
P0.31	17[6]	O	General purpose digital output only pin. **Important:** This pin MUST NOT be externally pulled LOW when $\overline{\text{RESET}}$ pin is LOW or the JTAG port will be disabled.
P1.0 to P1.31		I/O	**Port 1:** Port 1 is a 32-bit bidirectional I/O port with individual direction controls for each bit. The operation of port 1 pins depends upon the pin function selected via the pin connect block. Pins 0 through 15 of port 1 are not available.
P1.16/ TRACEPKT0	16[6]	O	**TRACEPKT0 —** Trace Packet, bit 0. Standard I/O port with internal pull-up.
P1.17/ TRACEPKT1	12[6]	O	**TRACEPKT1 —** Trace Packet, bit 1. Standard I/O port with internal pull-up.
P1.18/ TRACEPKT2	8[6]	O	**TRACEPKT2 —** Trace Packet, bit 2. Standard I/O port with internal pull-up.
P1.19/ TRACEPKT3	4[6]	O	**TRACEPKT3 —** Trace Packet, bit 3. Standard I/O port with internal pull-up.
P1.20/ TRACESYNC	48[6]	O	**TRACESYNC —** Trace Synchronization. Standard I/O port with internal pull-up. LOW on TRACESYNC while $\overline{\text{RESET}}$ is LOW enables pins P1.25:16 to operate as Trace port after reset.
P1.21/ PIPESTAT0	44[6]	O	**PIPESTAT0 —** Pipeline Status, bit 0. Standard I/O port with internal pull-up.
P1.22/ PIPESTAT1	40[6]	O	**PIPESTAT1 —** Pipeline Status, bit 1. Standard I/O port with internal pull-up.
P1.23/ PIPESTAT2	36[6]	O	**PIPESTAT2 —** Pipeline Status, bit 2. Standard I/O port with internal pull-up.
P1.24/ TRACECLK	32[6]	O	**TRACECLK —** Trace Clock. Standard I/O port with internal pull-up.
P1.25/EXTIN0	28[6]	I	**EXTIN0 —** External Trigger Input. Standard I/O with internal pull-up.

All information provided in this document is subject to legal disclaimers.

© NXP B.V. 2011. All rights reserved.

Table 3. Pin description *...continued*

Symbol	Pin	Type	Description
P1.26/RTCK	24[6]	I/O	**RTCK —** Returned Test Clock output. Extra signal added to the JTAG port. Assists debugger synchronization when processor frequency varies. Bidirectional pin with internal pull-up. LOW on RTCK while $\overline{\text{RESET}}$ is LOW enables pins P1.31:26 to operate as Debug port after reset.
P1.27/TDO	64[6]	O	**TDO —** Test Data out for JTAG interface.
P1.28/TDI	60[6]	I	**TDI —** Test Data in for JTAG interface.
P1.29/TCK	56[6]	I	**TCK —** Test Clock for JTAG interface.
P1.30/TMS	52[6]	I	**TMS —** Test Mode Select for JTAG interface.
P1.31/$\overline{\text{TRST}}$	20[6]	I	**$\overline{\text{TRST}}$ —** Test Reset for JTAG interface.
$\overline{\text{RESET}}$	57[7]	I	**External reset input:** A LOW on this pin resets the device, causing I/O ports and peripherals to take on their default states, and processor execution to begin at address 0. TTL with hysteresis, 5 V tolerant.
XTAL1	62[8]	I	Input to the oscillator circuit and internal clock generator circuits.
XTAL2	61[8]	O	Output from the oscillator amplifier.
RTCX1	3[9]	I	Input to the RTC oscillator circuit.
RTCX2	5[9]	O	Output from the RTC oscillator circuit.
V_{SS}	6, 18, 25, 42, 50	I	**Ground:** 0 V reference.
V_{SSA}	59	I	**Analog ground:** 0 V reference. This should nominally be the same voltage as V_{SS}, but should be isolated to minimize noise and error.
V_{DD}	23, 43, 51	I	**3.3 V power supply:** This is the power supply voltage for the core and I/O ports.
V_{DDA}	7	I	**Analog 3.3 V power supply:** This should be nominally the same voltage as V_{DD} but should be isolated to minimize noise and error. This voltage is used to power the on-chip PLL.
VREF	63	I	**ADC reference:** This should be nominally the same voltage as V_{DD} but should be isolated to minimize noise and error. Level on this pin is used as a reference for A/D and D/A convertor(s).
VBAT	49	I	**RTC power supply:** 3.3 V on this pin supplies the power to the RTC.

[1] 5 V tolerant pad providing digital I/O functions with TTL levels and hysteresis and 10 ns slew rate control.

[2] 5 V tolerant pad providing digital I/O functions with TTL levels and hysteresis and 10 ns slew rate control. If configured for an input function, this pad utilizes built-in glitch filter that blocks pulses shorter than 3 ns.

[3] Open drain 5 V tolerant digital I/O I^2C-bus 400 kHz specification compatible pad. It requires external pull-up to provide an output functionality.

[4] 5 V tolerant pad providing digital I/O (with TTL levels and hysteresis and 10 ns slew rate control) and analog input function. If configured for an input function, this pad utilizes built-in glitch filter that blocks pulses shorter than 3 ns. When configured as an ADC input, digital section of the pad is disabled.

[5] 5 V tolerant pad providing digital I/O (with TTL levels and hysteresis and 10 ns slew rate control) and analog output function. When configured as the DAC output, digital section of the pad is disabled.

[6] 5 V tolerant pad with built-in pull-up resistor providing digital I/O functions with TTL levels and hysteresis and 10 ns slew rate control. The pull-up resistor's value ranges from 60 kΩ to 300 kΩ.

[7] 5 V tolerant pad providing digital input (with TTL levels and hysteresis) function only.

[8] Pad provides special analog functionality.

[9] When unused, the RTCX1 pin can be grounded or left floating. For lowest power leave it floating.
The other RTC pin, RTCX2, should be left floating.

All information provided in this document is subject to legal disclaimers.

© NXP B.V. 2011. All rights reserved.

6. Functional description

6.1 Architectural overview

The ARM7TDMI-S is a general purpose 32-bit microprocessor, which offers high performance and very low power consumption. The ARM architecture is based on Reduced Instruction Set Computer (RISC) principles, and the instruction set and related decode mechanism are much simpler than those of microprogrammed Complex Instruction Set Computers. This simplicity results in a high instruction throughput and impressive real-time interrupt response from a small and cost-effective processor core.

Pipeline techniques are employed so that all parts of the processing and memory systems can operate continuously. Typically, while one instruction is being executed, its successor is being decoded, and a third instruction is being fetched from memory.

The ARM7TDMI-S processor also employs a unique architectural strategy known as Thumb, which makes it ideally suited to high-volume applications with memory restrictions, or applications where code density is an issue.

The key idea behind Thumb is that of a super-reduced instruction set. Essentially, the ARM7TDMI-S processor has two instruction sets:

- The standard 32-bit ARM set.
- A 16-bit Thumb set.

The Thumb set's 16-bit instruction length allows it to approach twice the density of standard ARM code while retaining most of the ARM's performance advantage over a traditional 16-bit processor using 16-bit registers. This is possible because Thumb code operates on the same 32-bit register set as ARM code.

Thumb code is able to provide up to 65 % of the code size of ARM, and 160 % of the performance of an equivalent ARM processor connected to a 16-bit memory system.

6.2 On-chip flash program memory

The LPC2131/32/34/36/38 incorporate a 32 kB, 64 kB, 128 kB, 256 kB and 512 kB flash memory system respectively. This memory may be used for both code and data storage. Programming of the flash memory may be accomplished in several ways. It may be programmed In System via the serial port. The application program may also erase and/or program the flash while the application is running, allowing a great degree of flexibility for data storage field firmware upgrades, etc. When the LPC2131/32/34/36/38 on-chip bootloader is used, 32/64/128/256/500 kB of flash memory is available for user code.

The LPC2131/32/34/36/38 flash memory provides a minimum of 100000 erase/write cycles and 20 years of data-retention.

6.3 On-chip static RAM

On-chip static RAM may be used for code and/or data storage. The SRAM may be accessed as 8-bit, 16-bit, and 32-bit. The LPC2131, LPC2132/34, and LPC2136/38 provide 8 kB, 16 kB and 32 kB of static RAM respectively.

All information provided in this document is subject to legal disclaimers.

© NXP B.V. 2011. All rights reserved.

6.4 Memory map

The LPC2131/32/34/36/38 memory map incorporates several distinct regions, as shown in Figure 6.

In addition, the CPU interrupt vectors may be re-mapped to allow them to reside in either flash memory (the default) or on-chip static RAM. This is described in Section 6.18 "System control".

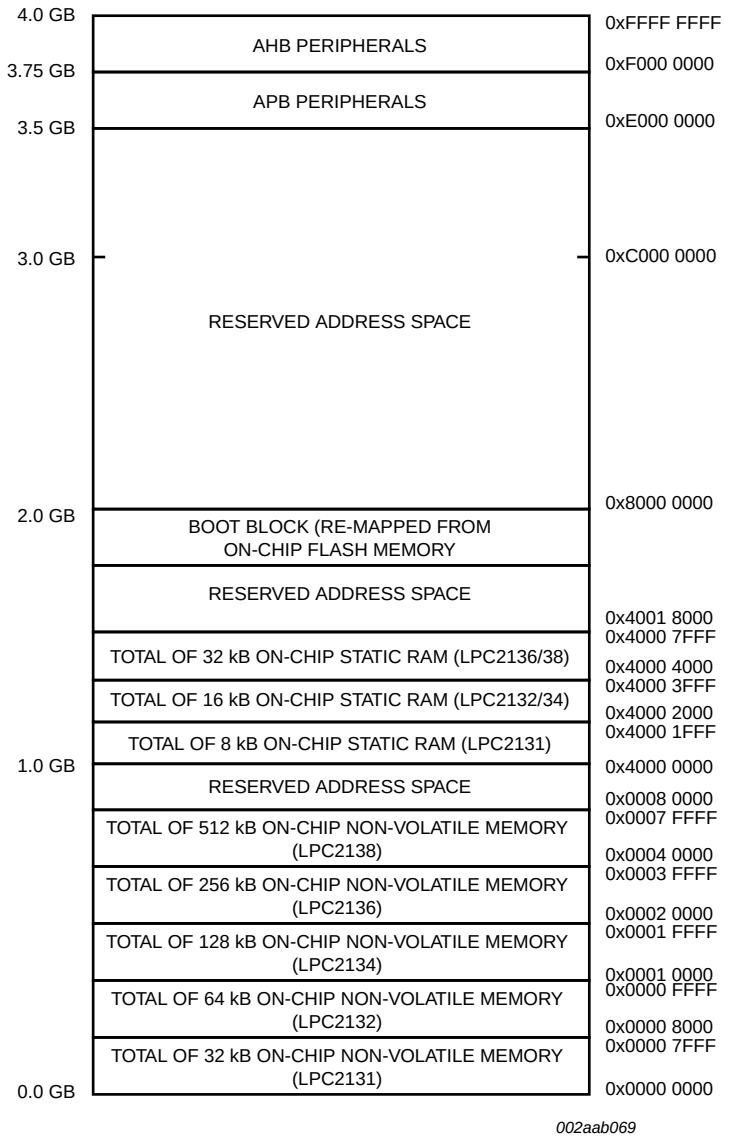

Fig 6. LPC2131/32/34/36/38 memory map

All information provided in this document is subject to legal disclaimers.

© NXP B.V. 2011. All rights reserved.

6.5 Interrupt controller

The Vectored Interrupt Controller (VIC) accepts all of the interrupt request inputs and categorizes them as Fast Interrupt reQuest (FIQ), vectored Interrupt ReQuest (IRQ), and non-vectored IRQ as defined by programmable settings. The programmable assignment scheme means that priorities of interrupts from the various peripherals can be dynamically assigned and adjusted.

FIQ has the highest priority. If more than one request is assigned to FIQ, the VIC combines the requests to produce the FIQ signal to the ARM processor. The fastest possible FIQ latency is achieved when only one request is classified as FIQ, because then the FIQ service routine can simply start dealing with that device. But if more than one request is assigned to the FIQ class, the FIQ service routine can read a word from the VIC that identifies which FIQ source(s) is (are) requesting an interrupt.

Vectored IRQs have the middle priority. Sixteen of the interrupt requests can be assigned to this category. Any of the interrupt requests can be assigned to any of the 16 vectored IRQ slots, among which slot 0 has the highest priority and slot 15 has the lowest.

Non-vectored IRQs have the lowest priority.

The VIC combines the requests from all the vectored and non-vectored IRQs to produce the IRQ signal to the ARM processor. The IRQ service routine can start by reading a register from the VIC and jumping there. If any of the vectored IRQs are requesting, the VIC provides the address of the highest-priority requesting IRQs service routine, otherwise it provides the address of a default routine that is shared by all the non-vectored IRQs. The default routine can read another VIC register to see what IRQs are active.

6.5.1 Interrupt sources

Table 4 lists the interrupt sources for each peripheral function. Each peripheral device has one interrupt line connected to the Vectored Interrupt Controller, but may have several internal interrupt flags. Individual interrupt flags may also represent more than one interrupt source.

Table 4. Interrupt sources

Block	Flag(s)	VIC channel #
WDT	Watchdog Interrupt (WDINT)	0
-	Reserved for software interrupts only	1
ARM Core	EmbeddedICE, DbgCommRX	2
ARM Core	EmbeddedICE, DbgCommTX	3
TIMER0	Match 0 to 3 (MR0, MR1, MR2, MR3) Capture 0 to 3 (CR0, CR1, CR2, CR3)	4
TIMER1	Match 0 to 3 (MR0, MR1, MR2, MR3) Capture 0 to 3 (CR0, CR1, CR2, CR3)	5
UART0	RX Line Status (RLS) Transmit Holding Register empty (THRE) RX Data Available (RDA) Character Time-out Indicator (CTI)	6

All information provided in this document is subject to legal disclaimers.

© NXP B.V. 2011. All rights reserved.

Table 4. Interrupt sources *...continued*

Block	Flag(s)	VIC channel #
UART1	RX Line Status (RLS)	7
	Transmit Holding Register empty (THRE)	
	RX Data Available (RDA)	
	Character Time-out Indicator (CTI)	
	Modem Status Interrupt (MSI) (Available in LPC2134/36/38 only)	
PWM0	Match 0 to 6 (MR0, MR1, MR2, MR3, MR4, MR5, MR6)	8
	Capture 0 to 3 (CR0, CR1, CR2, CR3)	
I^2C0	SI (state change)	9
SPI0	SPIF, MODF	10
SSP	TX FIFO at least half empty (TXRIS)	11
	RX FIFO at least half full (RXRIS)	
	Receive Timeout (RTRIS)	
	Receive Overrun (RORRIS)	
PLL	PLL Lock (PLOCK)	12
RTC	RTCCIF (Counter Increment), RTCALF (Alarm)	13
System Control	External Interrupt 0 (EINT0)	14
	External Interrupt 1 (EINT1)	15
	External Interrupt 2 (EINT2)	16
	External Interrupt 3 (EINT3)	17
AD0	ADC 0	18
I2C1	SI (state change)	19
BOD	Brown Out Detect	20
AD1	ADC 1 (Available in LPC2134/36/38 only)	21

6.6 Pin connect block

The pin connect block allows selected pins of the microcontroller to have more than one function. Configuration registers control the multiplexers to allow connection between the pin and the on chip peripherals. Peripherals should be connected to the appropriate pins prior to being activated, and prior to any related interrupt(s) being enabled. Activity of any enabled peripheral function that is not mapped to a related pin should be considered undefined.

6.7 General purpose parallel I/O and Fast I/O

Device pins that are not connected to a specific peripheral function are controlled by the GPIO registers. Pins may be dynamically configured as inputs or outputs. Separate registers allow setting or clearing any number of outputs simultaneously. The value of the output register may be read back, as well as the current state of the port pins.

6.7.1 Features

- Direction control of individual bits.
- Separate control of output set and clear.
- All I/O default to inputs after reset.

All information provided in this document is subject to legal disclaimers.

© NXP B.V. 2011. All rights reserved.

6.7.2 Fast I/O features available in LPC213x/01 only

- Fast I/O registers are located on the ARM local bus for the fastest possible I/O timing.
- All GPIO registers are byte addressable.
- Entire port value can be written in one instruction.
- Mask registers allow single instruction to set or clear any number of bits in one port.

6.8 10-bit ADC

The LPC2131/32 contain one and the LPC2134/36/38 contain two ADCs. These converters are single 10-bit successive approximation ADCs with eight multiplexed channels.

6.8.1 Features

- Measurement range of 0 V to 3.3 V.
- Each converter capable of performing more than 400000 10-bit samples per second.
- Burst conversion mode for single or multiple inputs.
- Optional conversion on transition on input pin or Timer Match signal.
- Global Start command for both converters (LPC2134/36/38 only).

6.8.2 ADC features available in LPC213x/01 only

- Every analog input has a dedicated result register to reduce interrupt overhead.
- Every analog input can generate an interrupt once the conversion is completed.

6.9 10-bit DAC

This peripheral is available in the LPC2132/34/36/38 only. The DAC enables the LPC2132/34/36/38 to generate variable analog output.

6.9.1 Features

- 10-bit digital to analog converter.
- Buffered output.
- Power-down mode available.
- Selectable speed versus power.

6.10 UARTs

The LPC2131/32/34/36/38 each contain two UARTs. In addition to standard transmit and receive data lines, the LPC2134/36/38 UART1 also provides a full modem control handshake interface.

6.10.1 Features

- 16 B Receive and Transmit FIFOs.
- Register locations conform to 16C550 industry standard.
- Receiver FIFO trigger points at 1 B, 4 B, 8 B, and 14 B

All information provided in this document is subject to legal disclaimers.

© NXP B.V. 2011. All rights reserved.

- Built-in baud rate generator.
- Standard modem interface signals included on UART1. (LPC2134/36/38 only)
- The LPC2131/32/34/36/38 transmission FIFO control enables implementation of software (XON/XOFF) flow control on both UARTs and hardware (CTS/RTS) flow control on the LPC2134/36/38 UART1 only.

6.10.2 UART features available in LPC213x/01 only

- Fractional baud rate generator enables standard baud rates such as 115200 to be achieved with any crystal frequency above 2 MHz.
- Auto-bauding.
- Auto-CTS/RTS flow-control fully implemented in hardware (LPC2134/36/38 only).

6.11 I^2C-bus serial I/O controller

The LPC2131/32/34/36/38 each contain two I^2C-bus controllers.

The I^2C-bus is bidirectional, for inter-IC control using only two wires: a Serial Clock Line (SCL), and a Serial DAta line (SDA). Each device is recognized by a unique address and can operate as either a receiver-only device (e.g., an LCD driver or a transmitter with the capability to both receive and send information (such as memory)). Transmitters and/or receivers can operate in either master or slave mode, depending on whether the chip has to initiate a data transfer or is only addressed. The I^2C-bus is a multi-master bus, it can be controlled by more than one bus master connected to it.

This I^2C-bus implementation supports bit rates up to 400 kbit/s (Fast I^2C).

6.11.1 Features

- Standard I^2C compliant bus interface.
- Easy to configure as Master, Slave, or Master/Slave.
- Programmable clocks allow versatile rate control.
- Bidirectional data transfer between masters and slaves.
- Multi-master bus (no central master).
- Arbitration between simultaneously transmitting masters without corruption of serial data on the bus.
- Serial clock synchronization allows devices with different bit rates to communicate via one serial bus.
- Serial clock synchronization can be used as a handshake mechanism to suspend and resume serial transfer.
- The I^2C-bus may be used for test and diagnostic purposes.

6.12 SPI serial I/O controller

The LPC2131/32/34/36/38 each contain one SPI controller. The SPI is a full duplex serial interface, designed to be able to handle multiple masters and slaves connected to a given bus. Only a single master and a single slave can communicate on the interface during a given data transfer. During a data transfer the master always sends a byte of data to the slave, and the slave always sends a byte of data to the master.

All information provided in this document is subject to legal disclaimers.

© NXP B.V. 2011. All rights reserved.

6.12.1 Features

- Compliant with Serial Peripheral Interface (SPI) specification.
- Synchronous, Serial, Full Duplex, Communication.
- Combined SPI master and slave.
- Maximum data bit rate of one eighth of the input clock rate.

6.13 SSP serial I/O controller

The LPC2131/32/34/36/38 each contain one Serial Synchronous Port controller (SSP). The SSP controller is capable of operation on a SPI, 4-wire SSI, or Microwire bus. It can interact with multiple masters and slaves on the bus. However, only a single master and a single slave can communicate on the bus during a given data transfer. The SSP supports full duplex transfers, with frames of 4 bits to 16 bits of data flowing from the master to the slave and from the slave to the master. Often only one of these data flows carries meaningful data.

6.13.1 Features

- Compatible with Motorola SPI, 4-wire TI SSI and National Semiconductor Microwire buses.
- Synchronous Serial Communication.
- Master or slave operation.
- 8-frame FIFOs for both transmit and receive.
- Four bits to 16 bits per frame.

6.14 General purpose timers/external event counters

The Timer/Counter is designed to count cycles of the peripheral clock (PCLK) or an externally supplied clock, and optionally generate interrupts or perform other actions at specified timer values, based on four match registers. It also includes four capture inputs to trap the timer value when an input signal transitions, optionally generating an interrupt. Multiple pins can be selected to perform a single capture or match function, providing an application with ‘or’ and ‘and’, as well as ‘broadcast’ functions among them.

At any given time only one of peripheral’s capture inputs can be selected as an external event signal source, i.e., timer’s clock. The rate of external events that can be successfully counted is limited to PCLK/2. In this configuration, unused capture lines can be selected as regular timer capture inputs.

6.14.1 Features

- A 32-bit Timer/Counter with a programmable 32-bit Prescaler.
- External Event Counter or timer operation.
- Four 32-bit capture channels per timer/counter that can take a snapshot of the timer value when an input signal transitions. A capture event may also optionally generate an interrupt.
- Four 32-bit match registers that allow:
  - Continuous operation with optional interrupt generation on match.

All information provided in this document is subject to legal disclaimers.

© NXP B.V. 2011. All rights reserved.

  - Stop timer on match with optional interrupt generation.
  - Reset timer on match with optional interrupt generation.
- Four external outputs per timer/counter corresponding to match registers, with the following capabilities:
  - Set LOW on match.
  - Set HIGH on match.
  - Toggle on match.
  - Do nothing on match.

6.15 Watchdog timer

The purpose of the watchdog is to reset the microcontroller within a reasonable amount of time if it enters an erroneous state. When enabled, the watchdog will generate a system reset if the user program fails to 'feed' (or reload) the watchdog within a predetermined amount of time.

6.15.1 Features

- Internally resets chip if not periodically reloaded.
- Debug mode.
- Enabled by software but requires a hardware reset or a watchdog reset/interrupt to be disabled.
- Incorrect/Incomplete feed sequence causes reset/interrupt if enabled.
- Flag to indicate watchdog reset.
- Programmable 32-bit timer with internal pre-scaler.
- Selectable time period from ($T_{cy(PCLK)} \times 256 \times 4$) to ($T_{cy(PCLK)} \times 2^{32} \times 4$) in multiples of $T_{cy(PCLK)} \times 4$.

6.16 Real-time clock

The Real-Time Clock (RTC) is designed to provide a set of counters to measure time when normal or idle operating mode is selected. The RTC has been designed to use little power, making it suitable for battery powered systems where the CPU is not running continuously (Idle mode).

6.16.1 Features

- Measures the passage of time to maintain a calendar and clock.
- Ultra-low power design to support battery powered systems.
- Provides Seconds, Minutes, Hours, Day of Month, Month, Year, Day of Week, and Day of Year.
- Can use either the RTC dedicated 32 kHz oscillator input or clock derived from the external crystal/oscillator input at XTAL1. Programmable Reference Clock Divider allows fine adjustment of the RTC.
- Dedicated power supply pin can be connected to a battery or the main 3.3 V.

All information provided in this document is subject to legal disclaimers.

© NXP B.V. 2011. All rights reserved.

6.17 Pulse width modulator

The PWM is based on the standard Timer block and inherits all of its features, although only the PWM function is pinned out on the LPC2131/32/34/36/38. The Timer is designed to count cycles of the peripheral clock (PCLK) and optionally generate interrupts or perform other actions when specified timer values occur, based on seven match registers. The PWM function is also based on match register events.

The ability to separately control rising and falling edge locations allows the PWM to be used for more applications. For instance, multi-phase motor control typically requires three non-overlapping PWM outputs with individual control of all three pulse widths and positions.

Two match registers can be used to provide a single edge controlled PWM output. One match register (MR0) controls the PWM cycle rate, by resetting the count upon match. The other match register controls the PWM edge position. Additional single edge controlled PWM outputs require only one match register each, since the repetition rate is the same for all PWM outputs. Multiple single edge controlled PWM outputs will all have a rising edge at the beginning of each PWM cycle, when an MR0 match occurs.

Three match registers can be used to provide a PWM output with both edges controlled. Again, the MR0 match register controls the PWM cycle rate. The other match registers control the two PWM edge positions. Additional double edge controlled PWM outputs require only two match registers each, since the repetition rate is the same for all PWM outputs.

With double edge controlled PWM outputs, specific match registers control the rising and falling edge of the output. This allows both positive going PWM pulses (when the rising edge occurs prior to the falling edge), and negative going PWM pulses (when the falling edge occurs prior to the rising edge).

6.17.1 Features

- Seven match registers allow up to six single edge controlled or three double edge controlled PWM outputs, or a mix of both types.
- The match registers also allow:
  - Continuous operation with optional interrupt generation on match.
  - Stop timer on match with optional interrupt generation.
  - Reset timer on match with optional interrupt generation.
- Supports single edge controlled and/or double edge controlled PWM outputs. Single edge controlled PWM outputs all go HIGH at the beginning of each cycle unless the output is a constant LOW. Double edge controlled PWM outputs can have either edge occur at any position within a cycle. This allows for both positive going and negative going pulses.
- Pulse period and width can be any number of timer counts. This allows complete flexibility in the trade-off between resolution and repetition rate. All PWM outputs will occur at the same repetition rate.
- Double edge controlled PWM outputs can be programmed to be either positive going or negative going pulses.

All information provided in this document is subject to legal disclaimers.

© NXP B.V. 2011. All rights reserved.

- Match register updates are synchronized with pulse outputs to prevent generation of erroneous pulses. Software must 'release' new match values before they can become effective.
- May be used as a standard timer if the PWM mode is not enabled.
- A 32-bit Timer/Counter with a programmable 32-bit Prescaler.

6.18 System control

6.18.1 Crystal oscillator

On-chip integrated oscillator operates with external crystal in range of 1 MHz to 30 MHz and with external oscillator up to 50 MHz. The oscillator output frequency is called f_{osc} and the ARM processor clock frequency is referred to as CCLK for purposes of rate equations, etc. f_{osc} and CCLK are the same value unless the PLL is running and connected. Refer to Section 6.18.2 "PLL" for additional information.

6.18.2 PLL

The PLL accepts an input clock frequency in the range of 10 MHz to 25 MHz. The input frequency is multiplied up into the range of 10 MHz to 60 MHz with a Current Controlled Oscillator (CCO). The multiplier can be an integer value from 1 to 32 (in practice, the multiplier value cannot be higher than 6 on this family of microcontrollers due to the upper frequency limit of the CPU). The CCO operates in the range of 156 MHz to 320 MHz, so there is an additional divider in the loop to keep the CCO within its frequency range while the PLL is providing the desired output frequency. The output divider may be set to divide by 2, 4, 8, or 16 to produce the output clock. Since the minimum output divider value is 2, it is insured that the PLL output has a 50 % duty cycle. The PLL is turned off and bypassed following a chip reset and may be enabled by software. The program must configure and activate the PLL, wait for the PLL to Lock, then connect to the PLL as a clock source. The PLL settling time is 100 μs.

6.18.3 Reset and wake-up timer

Reset has two sources on the LPC2131/32/34/36/38: the $\overline{\text{RESET}}$ pin and watchdog reset. The $\overline{\text{RESET}}$ pin is a Schmitt trigger input pin with an additional glitch filter. Assertion of chip reset by any source starts the wake-up timer (see wake-up timer description below), causing the internal chip reset to remain asserted until the external reset is de-asserted, the oscillator is running, a fixed number of clocks have passed, and the on-chip flash controller has completed its initialization.

When the internal reset is removed, the processor begins executing at address 0, which is the reset vector. At that point, all of the processor and peripheral registers have been initialized to predetermined values.

The wake-up timer ensures that the oscillator and other analog functions required for chip operation are fully functional before the processor is allowed to execute instructions. This is important at power on, all types of reset, and whenever any of the aforementioned functions are turned off for any reason. Since the oscillator and other functions are turned off during Power-down mode, any wake-up of the processor from Power-down mode makes use of the wake-up timer.

All information provided in this document is subject to legal disclaimers.

© NXP B.V. 2011. All rights reserved.

The wake-up timer monitors the crystal oscillator as the means of checking whether it is safe to begin code execution. When power is applied to the chip, or some event caused the chip to exit Power-down mode, some time is required for the oscillator to produce a signal of sufficient amplitude to drive the clock logic. The amount of time depends on many factors, including the rate of V_{DD} ramp (in the case of power on), the type of crystal and its electrical characteristics (if a quartz crystal is used), as well as any other external circuitry (e.g. capacitors), and the characteristics of the oscillator itself under the existing ambient conditions.

6.18.4 Brownout detector

The LPC2131/32/34/36/38 include 2-stage monitoring of the voltage on the V_{DD} pins. If this voltage falls below 2.9 V, the BOD asserts an interrupt signal to the Vectored Interrupt Controller. This signal can be enabled for interrupt; if not, software can monitor the signal by reading dedicated register.

The second stage of low-voltage detection asserts reset to inactivate the LPC2131/32/34/36/38 when the voltage on the V_{DD} pins falls below 2.6 V. This reset prevents alteration of the flash as operation of the various elements of the chip would otherwise become unreliable due to low voltage. The BOD circuit maintains this reset down below 1 V, at which point the POR circuitry maintains the overall reset.

Both the 2.9 V and 2.6 V thresholds include some hysteresis. In normal operation, this hysteresis allows the 2.9 V detection to reliably interrupt, or a regularly-executed event loop to sense the condition.

Features available only in LPC213x/01 parts include ability to put the BOD in power-down mode, turn it on or off and to control when the BOD will reset the LPC213x/01 microcontroller. This can be used to further reduce power consumption when a low power mode (such as Power Down) is invoked.

6.18.5 Code security

This feature of the LPC2131/32/34/36/38 allow an application to control whether it can be debugged or protected from observation.

If after reset on-chip bootloader detects a valid checksum in flash and reads 0x8765 4321 from address 0x1FC in flash, debugging will be disabled and thus the code in flash will be protected from observation. Once debugging is disabled, it can be enabled only by performing a full chip erase using the ISP.

6.18.6 External interrupt inputs

The LPC2131/32/34/36/38 include up to nine edge or level sensitive External Interrupt Inputs as selectable pin functions. When the pins are combined, external events can be processed as four independent interrupt signals. The External Interrupt Inputs can optionally be used to wake up the processor from Power-down mode.

6.18.7 Memory Mapping Control

The Memory Mapping Control alters the mapping of the interrupt vectors that appear beginning at address 0x0000 0000. Vectors may be mapped to the bottom of the on-chip flash memory, or to the on-chip static RAM. This allows code running in different memory spaces to have control of the interrupts.

All information provided in this document is subject to legal disclaimers.

© NXP B.V. 2011. All rights reserved.

6.18.8 Power Control

The LPC2131/32/34/36/38 support two reduced power modes: Idle mode and Power-down mode.

In Idle mode, execution of instructions is suspended until either a reset or interrupt occurs. Peripheral functions continue operation during Idle mode and may generate interrupts to cause the processor to resume execution. Idle mode eliminates power used by the processor itself, memory systems and related controllers, and internal buses.

In Power-down mode, the oscillator is shut down and the chip receives no internal clocks. The processor state and registers, peripheral registers, and internal SRAM values are preserved throughout Power-down mode and the logic levels of chip output pins remain static. The Power-down mode can be terminated and normal operation resumed by either a reset or certain specific interrupts that are able to function without clocks. Since all dynamic operation of the chip is suspended, Power-down mode reduces chip power consumption to nearly zero.

Selecting an external 32 kHz clock instead of the PCLK as a clock-source for the on-chip RTC will enable the microcontroller to have the RTC active during Power-down mode. Power-down current is increased with RTC active. However, it is significantly lower than in Idle mode.

A Power Control for Peripherals feature allows individual peripherals to be turned off if they are not needed in the application, resulting in additional power savings.

6.18.9 APB bus

The APB divider determines the relationship between the processor clock (CCLK) and the clock used by peripheral devices (PCLK). The APB divider serves two purposes. The first is to provide peripherals with the desired PCLK via APB bus so that they can operate at the speed chosen for the ARM processor. In order to achieve this, the APB bus may be slowed down to $\frac{1}{2}$ to $\frac{1}{4}$ of the processor clock rate. Because the APB bus must work properly at power-up (and its timing cannot be altered if it does not work since the APB divider control registers reside on the APB bus), the default condition at reset is for the APB bus to run at $\frac{1}{4}$ of the processor clock rate. The second purpose of the APB divider is to allow power savings when an application does not require any peripherals to run at the full processor rate. Because the APB divider is connected to the PLL output, the PLL remains active (if it was running) during Idle mode.

6.19 Emulation and debugging

The LPC2131/32/34/36/38 support emulation and debugging via a JTAG serial port. A trace port allows tracing program execution. Debugging and trace functions are multiplexed only with GPIOs on Port 1. This means that all communication, timer and interface peripherals residing on Port 0 are available during the development and debugging phase as they are when the application is run in the embedded system itself.

6.19.1 EmbeddedICE

Standard ARM EmbeddedICE logic provides on-chip debug support. The debugging of the target system requires a host computer running the debugger software and an EmbeddedICE protocol convertor. EmbeddedICE protocol convertor converts the Remote Debug Protocol commands to the JTAG data needed to access the ARM core.

All information provided in this document is subject to legal disclaimers.

© NXP B.V. 2011. All rights reserved.

The ARM core has a Debug Communication Channel function built-in. The debug communication channel allows a program running on the target to communicate with the host debugger or another separate host without stopping the program flow or even entering the debug state. The debug communication channel is accessed as a co-processor 14 by the program running on the ARM7TDMI-S core. The debug communication channel allows the JTAG port to be used for sending and receiving data without affecting the normal program flow. The debug communication channel data and control registers are mapped in to addresses in the EmbeddedICE logic.

6.19.2 Embedded trace

Since the LPC2131/32/34/36/38 have significant amounts of on-chip memory, it is not possible to determine how the processor core is operating simply by observing the external pins. The Embedded Trace Macrocell provides real-time trace capability for deeply embedded processor cores. It outputs information about processor execution to the trace port.

The ETM is connected directly to the ARM core and not to the main AMBA system bus. It compresses the trace information and exports it through a narrow trace port. An external trace port analyzer must capture the trace information under software debugger control. Instruction trace (or PC trace) shows the flow of execution of the processor and provides a list of all the instructions that were executed. Instruction trace is significantly compressed by only broadcasting branch addresses as well as a set of status signals that indicate the pipeline status on a cycle by cycle basis. Trace information generation can be controlled by selecting the trigger resource. Trigger resources include address comparators, counters and sequencers. Since trace information is compressed the software debugger requires a static image of the code being executed. Self-modifying code can not be traced because of this restriction.

6.19.3 RealMonitor

RealMonitor is a configurable software module, developed by ARM Inc., which enables real time debug. It is a lightweight debug monitor that runs in the background while users debug their foreground application. It communicates with the host using the DCC, which is present in the EmbeddedICE logic. The LPC2131/32/34/36/38 contain a specific configuration of RealMonitor software programmed into the on-chip flash memory.

All information provided in this document is subject to legal disclaimers.

© NXP B.V. 2011. All rights reserved.

7. Limiting values

Table 5. Limiting values

In accordance with the Absolute Maximum Rating System (IEC 60134).[1]

Symbol	Parameter	Conditions		Min	Max	Unit
V_{DD}	supply voltage (core and external rail)			–0.5	+3.6	V
V_{DDA}	analog 3.3 V pad supply voltage			–0.5	+4.6	V
$V_{i(VBAT)}$	input voltage on pin VBAT	for the RTC		–0.5	+4.6	V
$V_{i(VREF)}$	input voltage on pin VREF			–0.5	+4.6	V
V_{IA}	analog input voltage	on ADC related pins		–0.5	+5.1	V
V_I	input voltage	5 V tolerant I/O pins; only valid when the V_{DD} supply voltage is present	[2]	–0.5	+6.0	V
		other I/O pins	[2][3]	–0.5	V_{DD} + 0.5	V
I_{DD}	supply current	per supply pin	[4]	-	100	mA
I_{SS}	ground current	per ground pin	[4]	-	100	mA
I_{sink}	sink current	for I^2C-bus; DC; T = 85 °C		-	20	mA
T_{stg}	storage temperature		[5]	–40	+125	°C
$P_{tot(pack)}$	total power dissipation (per package)	based on package heat transfer, not device power consumption		-	1.5	W
V_{ESD}	electrostatic discharge voltage	human body model	[6]			
		all pins		–4000	+4000	V

[1] The following applies to the Limiting values:

a) This product includes circuitry specifically designed for the protection of its internal devices from the damaging effects of excessive static charge. Nonetheless, it is suggested that conventional precautions be taken to avoid applying greater than the rated maximum.

b) Parameters are valid over operating temperature range unless otherwise specified. All voltages are with respect to V_{SS} unless otherwise noted.

[2] Including voltage on outputs in 3-state mode.

[3] Not to exceed 4.6 V.

[4] The peak current is limited to 25 times the corresponding maximum current.

[5] Dependent on package type.

[6] Human body model: equivalent to discharging a 100 pF capacitor through a 1.5 kΩ series resistor.

All information provided in this document is subject to legal disclaimers.

© NXP B.V. 2011. All rights reserved.

8. Static characteristics

Table 6. Static characteristics

T_{amb} = –40 °C to +85 °C for commercial applications, unless otherwise specified.

Symbol	Parameter	Conditions		Min	Typ[1]	Max	Unit
V_{DD}	supply voltage (core and external rail)			3.0	3.3	3.6	V
V_{DDA}	analog 3.3 V pad supply voltage			2.5	3.3	3.6	V
$V_{i(VBAT)}$	input voltage on pin VBAT		[2]	2.0	3.3	3.6	V
$V_{i(VREF)}$	input voltage on pin VREF			2.5	3.3	3.6	V
Standard port pins, $\overline{RESET}$, P1.26/RTCK							
I_{IL}	LOW-level input current	V_I = 0 V; no pull-up		-	-	3	μA
I_{IH}	HIGH-level input current	$V_I = V_{DD}$; no-pull-down		-	-	3	μA
I_{OZ}	OFF-state output current	V_O = 0 V; $V_O = V_{DD}$; no pull-up/down		-	-	3	μA
I_{latch}	I/O latch-up current	$-(0.5V_{DD}) < V_I < (1.5V_{DD})$; T_j < 125 °C		-	-	100	mA
V_I	input voltage	pin configured to provide a digital function	[3][4][5][6]	0	-	5.5	V
V_O	output voltage	output active		0	-	V_{DD}	V
V_{IH}	HIGH-level input voltage			2.0	-	-	V
V_{IL}	LOW-level input voltage			-	-	0.8	V
V_{hys}	hysteresis voltage			0.4	-	-	V
V_{OH}	HIGH-level output voltage	I_{OH} = –4 mA	[7]	V_{DD} – 0.4	-	-	V
V_{OL}	LOW-level output voltage	I_{OL} = –4 mA	[7]	-	-	0.4	V
I_{OH}	HIGH-level output current	$V_{OH} = V_{DD}$ – 0.4 V	[7]	–4	-	-	mA
I_{OL}	LOW-level output current	V_{OL} = 0.4 V	[7]	4	-	-	mA
I_{OHS}	HIGH-level short-circuit output current	V_{OH} = 0 V	[8]	-	-	–45	mA
I_{OLS}	LOW-level short-circuit output current	$V_{OL} = V_{DDA}$	[8]	-	-	50	mA
I_{pd}	pull-down current	V_I = 5 V	[9]	10	50	150	μA
I_{pu}	pull-up current	V_I = 0 V	[10]	–15	–50	–85	μA
		$V_{DD} < V_I$ < 5 V	[9]	0	0	0	μA
$I_{DD(act)}$	active mode supply current	V_{DD} = 3.3 V; T_{amb} = 25 °C; code `while(1){}` executed from flash, no active peripherals					
		CCLK = 10 MHz		-	10	-	mA
		CCLK = 60 MHz		-	40	-	mA
$I_{DD(pd)}$	Power-down mode supply current	V_{DD} = 3.3 V; T_{amb} = 25 °C		-	60	-	μA
		V_{DD} = 3.3 V; T_{amb} = 85 °C		-	200	500	μA

All information provided in this document is subject to legal disclaimers.

© NXP B.V. 2011. All rights reserved.

Table 6. Static characteristics *...continued*

T_{amb} = −40 °C to +85 °C for commercial applications, unless otherwise specified.

Symbol	Parameter	Conditions		Min	Typ[1]	Max	Unit
I_{BATpd}	Power-down mode battery supply current	RTC clock = 32 kHz (from RTCXn pins); T_{amb} = 25 °C					
		V_{DD} = 3.0 V; $V_{i(VBAT)}$ = 2.5 V	[11]	-	14	-	μA
		V_{DD} = 3.0 V; $V_{i(VBAT)}$ = 3.0 V		-	16	-	μA
		V_{DD} = 3.3 V; $V_{i(VBAT)}$ = 3.3 V		-	18	-	μA
		V_{DD} = 3.6 V; $V_{i(VBAT)}$ = 3.6 V		-	20	-	μA
I_{BATact}	active mode battery supply current	CCLK = 60 MHz; PCLK = 15 MHz; PCLK enabled to RTCK; RTC clock = 32 kHz (from RTCXn pins); T_{amb} = 25 °C	[11]				
		V_{DD} = 3.0 V; $V_{i(VBAT)}$ = 3.0 V		-	78	-	μA
		V_{DD} = 3.3 V; $V_{i(VBAT)}$ = 3.3 V		-	80	-	μA
		V_{DD} = 3.6 V; $V_{i(VBAT)}$ = 3.6 V		-	82	-	μA
$I_{BATact(opt)}$	optimized active mode battery supply current	PCLK disabled to RTCK in the PCONP register; RTC clock = 32 kHz (from RTCXn pins); T_{amb} = 25 °C; $V_{i(VBAT)}$ = 3.3 V	[11][12]				
		CCLK = 6 MHz		-	21	-	μA
		CCLK = 25 MHz		-	23	-	μA
		CCLK = 50 MHz		-	27	-	μA
		CCLK = 60 MHz		-	30	-	μA
I^2C-bus pins							
V_{IH}	HIGH-level input voltage			$0.7V_{DD}$	-	-	V
V_{IL}	LOW-level input voltage			-	-	$0.3V_{DD}$	V
V_{hys}	hysteresis voltage			-	$0.05V_{DD}$	-	V
V_{OL}	LOW-level output voltage	I_{OLS} = 3 mA	[7]	-	-	0.4	V
I_{LI}	input leakage current	$V_I = V_{DD}$	[13]	-	2	4	μA
		V_I = 5 V	[13]	-	10	22	μA
Oscillator pins							
$V_{i(XTAL1)}$	input voltage on pin XTAL1			−0.5	1.8	1.95	V
$V_{o(XTAL2)}$	output voltage on pin XTAL2			−0.5	1.8	1.95	V
$V_{i(RTCX1)}$	input voltage on pin RTCX1			−0.5	1.8	1.95	V
$V_{o(RTCX2)}$	output voltage on pin RTCX2			−0.5	1.8	1.95	V

[1] Typical ratings are not guaranteed. The values listed are at room temperature (25 °C), nominal supply voltages.

[2] The RTC typically fails when $V_{i(VBAT)}$ drops below 1.6 V.

[3] Including voltage on outputs in 3-state mode.

All information provided in this document is subject to legal disclaimers.

© NXP B.V. 2011. All rights reserved.

[4] V_{DD} supply voltages must be present.

[5] 3-state outputs go into 3-state mode when V_{DD} is grounded.

[6] Please also see the errata note mentioned in the errata sheet.

[7] Accounts for 100 mV voltage drop in all supply lines.

[8] Only allowed for a short time period.

[9] Minimum condition for V_I = 4.5 V, maximum condition for V_I = 5.5 V.

[10] Applies to P1.16 to P1.25.

[11] On pin VBAT.

[12] Optimized for low battery consumption.

[13] To V_{SS}.

9. Dynamic characteristics

Table 7. Dynamic characteristics

T_{amb} = −40 °C to +85 °C for commercial applications, V_{DD} over specified ranges.[1]

Symbol	Parameter	Conditions	Min	Typ[2]	Max	Unit
External clock						
f_{osc}	oscillator frequency		10	-	25	MHz
$T_{cy(clk)}$	clock cycle time		40	-	100	ns
t_{CHCX}	clock HIGH time		$T_{cy(clk)} \times 0.4$	-	-	ns
t_{CLCX}	clock LOW time		$T_{cy(clk)} \times 0.4$	-	-	ns
t_{CLCH}	clock rise time		-	-	5	ns
t_{CHCL}	clock fall time		-	-	5	ns
Port pins (except P0.2 and P0.3)						
$t_{r(o)}$	output rise time		-	10	-	ns
$t_{f(o)}$	output fall time		-	10	-	ns
I^2C-bus pins (P0.2 and P0.3)						
$t_{f(o)}$	output fall time	V_{IH} to V_{IL}	$20 + 0.1 \times C_b$[3]	-	-	ns

[1] Parameters are valid over operating temperature range unless otherwise specified.

[2] Typical ratings are not guaranteed. The values listed are at room temperature (25 °C), nominal supply voltages.

[3] Bus capacitance C_b in pF, from 10 pF to 400 pF.

All information provided in this document is subject to legal disclaimers.

© NXP B.V. 2011. All rights reserved.

9.1 Timing

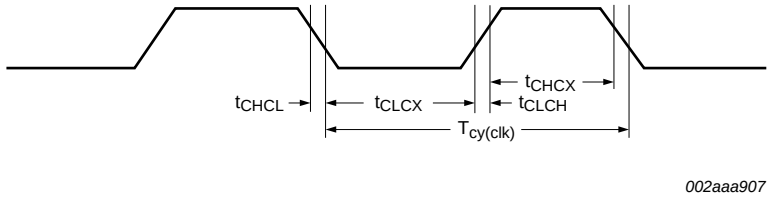

Fig 7. External clock timing (with an amplitude of at least $V_{i(RMS)}$ = 200 mV)

9.2 LPC2138 power consumption measurements

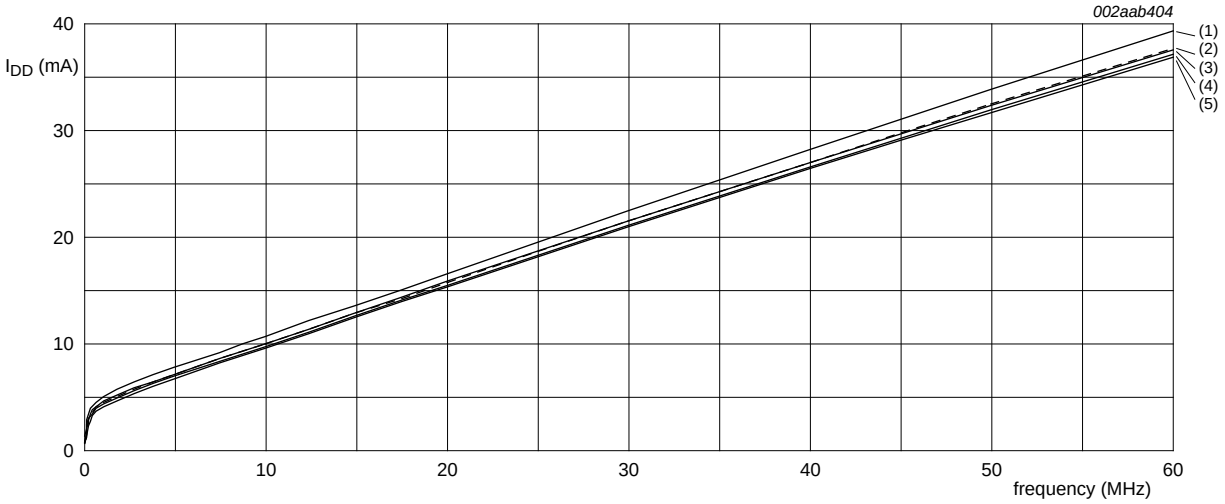

Test conditions: code executed from flash; all peripherals are enabled in PCONP register; PCLK = CCLK/4.

(1) V_{DD} = 3.6 V at −60 °C (max)

(2) V_{DD} = 3.6 V at 140 °C

(3) V_{DD} = 3.6 V at 25 °C

(4) V_{DD} = 3.3 V at 25 °C (typical)

(5) V_{DD} = 3.3 V at 95 °C (typical)

Fig 8. $I_{DD(act)}$ measured at different frequencies (CCLK) and temperatures

All information provided in this document is subject to legal disclaimers.

© NXP B.V. 2011. All rights reserved.

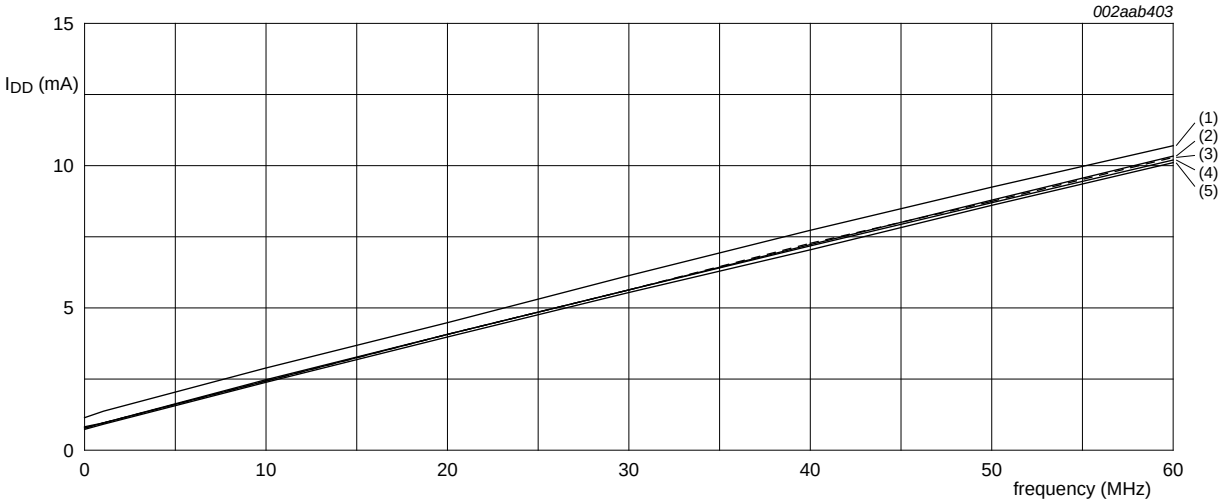

Test conditions: Idle mode entered executing code from flash; all peripherals are enabled in PCONP register; PCLK = CCLK/4.

(1) V_{DD} = 3.6 V at 140 °C (max)

(2) V_{DD} = 3.6 V at −60 °C

(3) V_{DD} = 3.6 V at 25 °C

(4) V_{DD} = 3.3 V at 25 °C (typical)

(5) V_{DD} = 3.3 V at 95 °C (typical)

Fig 9. I_{DD} idle measured at different frequencies (CCLK) and temperatures

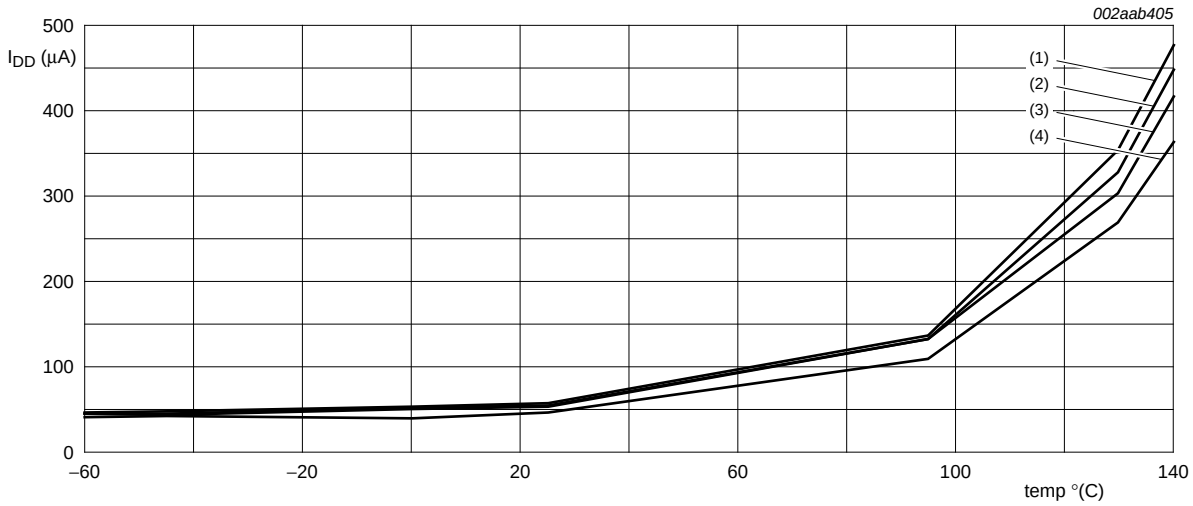

Test conditions: Power-down mode entered executing code from flash; all peripherals are enabled in PCONP register.

(1) V_{DD} = 3.6 V

(2) V_{DD} = 3.3 V (max)

(3) V_{DD} = 3.0 V

(4) V_{DD} = 3.3 V (typical)

Fig 10. $I_{DD(pd)}$ measured at different temperatures

All information provided in this document is subject to legal disclaimers.

© NXP B.V. 2011. All rights reserved.

10. ADC electrical characteristics

Table 8. ADC static characteristics

V_{DDA} = 2.5 V to 3.6 V; T_{amb} = –40 °C to +85 °C unless otherwise specified; ADC frequency 4.5 MHz.

Symbol	Parameter	Conditions		Min	Typ	Max	Unit
V_{IA}	analog input voltage			0	-	V_{DDA}	V
C_{ia}	analog input capacitance			-	-	1	pF
E_D	differential linearity error		[1][2][3]	-	-	±1	LSB
$E_{L(adj)}$	integral non-linearity		[1][4]	-	-	±2	LSB
E_O	offset error		[1][5]	-	-	±3	LSB
E_G	gain error		[1][6]	-	-	±0.5	%
E_T	absolute error		[1][7]	-	-	±4	LSB
R_{vsi}	voltage source interface resistance		[8]	-	-	40	kΩ

[1] Conditions: V_{SSA} = 0 V, V_{DDA} = 3.3 V.

[2] The ADC is monotonic, there are no missing codes.

[3] The differential linearity error (E_D) is the difference between the actual step width and the ideal step width. See Figure 11.

[4] The integral non-linearity ($E_{L(adj)}$) is the peak difference between the center of the steps of the actual and the ideal transfer curve after appropriate adjustment of gain and offset errors. See Figure 11.

[5] The offset error (E_O) is the absolute difference between the straight line which fits the actual curve and the straight line which fits the ideal curve. See Figure 11.

[6] The gain error (E_G) is the relative difference in percent between the straight line fitting the actual transfer curve after removing offset error, and the straight line which fits the ideal transfer curve. See Figure 11.

[7] The absolute error (E_T) is the maximum difference between the center of the steps of the actual transfer curve of the non-calibrated ADC and the ideal transfer curve. See Figure 11.

[8] See Figure 11.

All information provided in this document is subject to legal disclaimers.

© NXP B.V. 2011. All rights reserved.

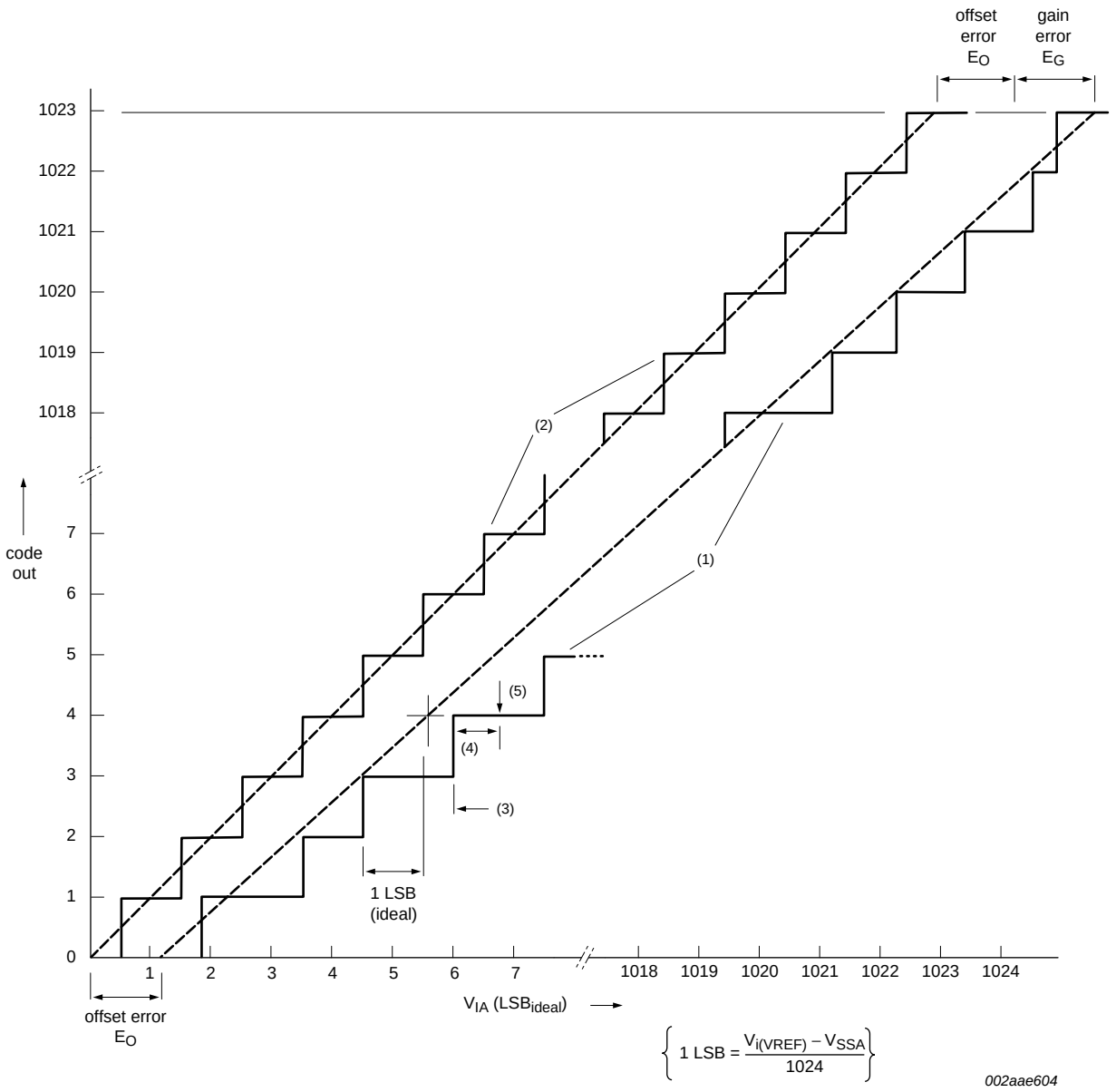

(1) Example of an actual transfer curve.

(2) The ideal transfer curve.

(3) Differential linearity error (E_D).

(4) Integral non-linearity ($E_{L(adj)}$).

(5) Center of a step of the actual transfer curve.

Fig 11. ADC characteristics

All information provided in this document is subject to legal disclaimers.

© NXP B.V. 2011. All rights reserved.

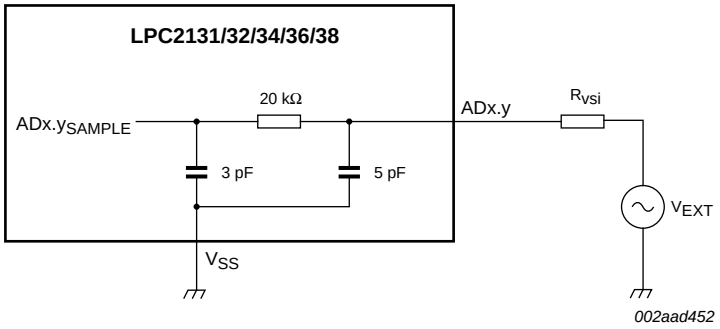

Fig 12. Suggested ADC interface - LPC2131/32/34/36/38 ADx.y pin

All information provided in this document is subject to legal disclaimers.

© NXP B.V. 2011. All rights reserved.

11. DAC electrical characteristics

Table 9. DAC electrical characteristics

V_{DDA} = 3.0 V to 3.6 V; T_{amb} = –40 °C to +85 °C unless otherwise specified

Symbol	Parameter	Conditions	Min	Typ	Max	Unit
E_D	differential linearity error		-	±1	-	LSB
$E_{L(adj)}$	integral non-linearity		-	±1.5	-	LSB
E_O	offset error		-	0.6	-	%
E_G	gain error		-	0.6	-	%
C_L	load capacitance		-	200	-	pF
R_L	load resistance		1	-	-	kΩ

All information provided in this document is subject to legal disclaimers.

© NXP B.V. 2011. All rights reserved.

12. Application information

12.1 Crystal oscillator XTAL input and component selection

The input voltage to the on-chip oscillators is limited to 1.8 V. If the oscillator is driven by a clock in slave mode, it is recommended that the input be coupled through a capacitor with C_i = 100 pF. To limit the input voltage to the specified range, choose an additional capacitor to ground C_g which attenuates the input voltage by a factor C_i / (C_i + C_g). In slave mode, a minimum of 200 mV (RMS) is needed.

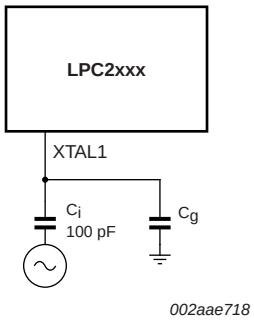

Fig 13. Slave mode operation of the on-chip oscillator

In slave mode the input clock signal should be coupled by means of a capacitor of 100 pF (Figure 13), with an amplitude between 200 mV (RMS) and 1000 mV (RMS). This corresponds to a square wave signal with a signal swing of between 280 mV and 1.4 V. The XTAL2 pin in this configuration can be left unconnected.

External components and models used in oscillation mode are shown in Figure 14 and in Table 10 and Table 11. Since the feedback resistance is integrated on chip, only a crystal and the capacitances C_{X1} and C_{X2} need to be connected externally in case of fundamental mode oscillation (the fundamental frequency is represented by L, C_L and R_S). Capacitance C_P in Figure 14 represents the parallel package capacitance and should not be larger than 7 pF. Parameters F_{OSC}, C_L, R_S and C_P are supplied by the crystal manufacturer.

All information provided in this document is subject to legal disclaimers.

© NXP B.V. 2011. All rights reserved.

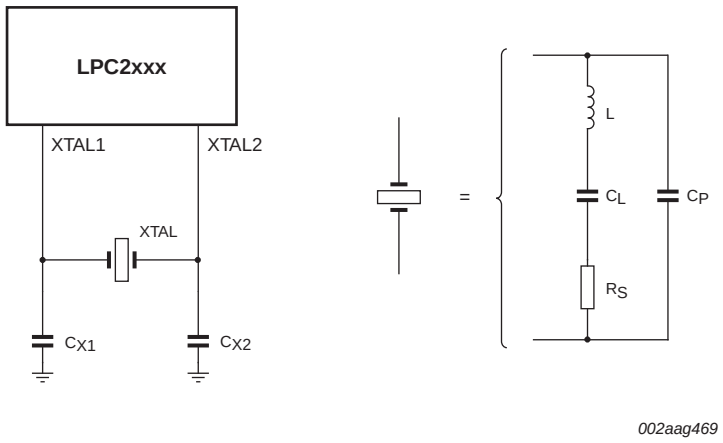

Fig 14. Oscillator modes and models: oscillation mode of operation and external crystal model used for C_{X1}/C_{X2} evaluation

Table 10. Recommended values for C_{X1}/C_{X2} in oscillation mode (crystal and external components parameters): low frequency mode

Fundamental oscillation frequency F_{OSC}	Crystal load capacitance C_L	Maximum crystal series resistance R_S	External load capacitors C_{X1}/C_{X2}
1 MHz to 5 MHz	10 pF	< 300 Ω	18 pF, 18 pF
	20 pF	< 300 Ω	39 pF, 39 pF
	30 pF	< 300 Ω	57 pF, 57 pF
5 MHz to 10 MHz	10 pF	< 300 Ω	18 pF, 18 pF
	20 pF	< 200 Ω	39 pF, 39 pF
	30 pF	< 100 Ω	57 pF, 57 pF
10 MHz to 15 MHz	10 pF	< 160 Ω	18 pF, 18 pF
	20 pF	< 60 Ω	39 pF, 39 pF
15 MHz to 20 MHz	10 pF	< 80 Ω	18 pF, 18 pF

Table 11. Recommended values for C_{X1}/C_{X2} in oscillation mode (crystal and external components parameters): high frequency mode

Fundamental oscillation frequency F_{OSC}	Crystal load capacitance C_L	Maximum crystal series resistance R_S	External load capacitors C_{X1}, C_{X2}
15 MHz to 20 MHz	10 pF	< 180 Ω	18 pF, 18 pF
	20 pF	< 100 Ω	39 pF, 39 pF
20 MHz to 25 MHz	10 pF	< 160 Ω	18 pF, 18 pF
	20 pF	< 80 Ω	39 pF, 39 pF

All information provided in this document is subject to legal disclaimers.

© NXP B.V. 2011. All rights reserved.

12.2 RTC 32 kHz oscillator component selection

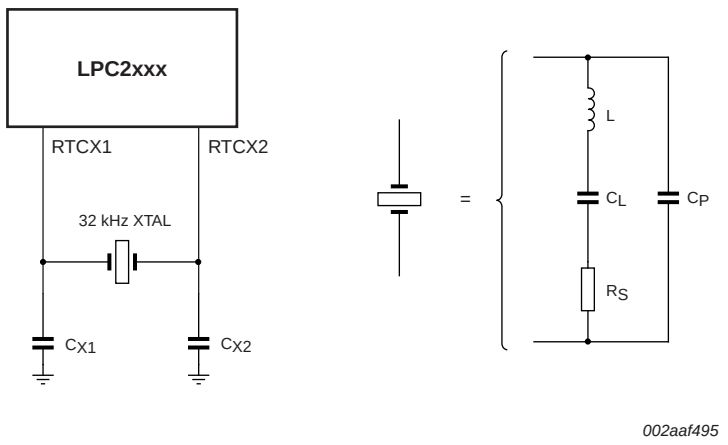

Fig 15. RTC oscillator modes and models: oscillation mode of operation and external crystal model used for C_{X1}/C_{X2} evaluation

The RTC external oscillator circuit is shown in Figure 15. Since the feedback resistance is integrated on chip, only a crystal, the capacitances C_{X1} and C_{X2} need to be connected externally to the microcontroller.

Table 12 gives the crystal parameters that should be used. C_L is the typical load capacitance of the crystal and is usually specified by the crystal manufacturer. The actual C_L influences oscillation frequency. When using a crystal that is manufactured for a different load capacitance, the circuit will oscillate at a slightly different frequency (depending on the quality of the crystal) compared to the specified one. Therefore for an accurate time reference it is advised to use the load capacitors as specified in Table 12 that belong to a specific C_L. The value of external capacitances C_{X1} and C_{X2} specified in this table are calculated from the internal parasitic capacitances and the C_L. Parasitics from PCB and package are not taken into account.

Table 12. Recommended values for the RTC external 32 kHz oscillator C_{X1}/C_{X2} components

Crystal load capacitance C_L	Maximum crystal series resistance R_S	External load capacitors C_{X1}/C_{X2}
11 pF	< 100 kΩ	18 pF, 18 pF
13 pF	< 100 kΩ	22 pF, 22 pF
15 pF	< 100 kΩ	27 pF, 27 pF

12.3 XTAL and RTCX Printed Circuit Board (PCB) layout guidelines

The crystal should be connected on the PCB as close as possible to the oscillator input and output pins of the chip. Take care that the load capacitors C_{x1}, C_{x2}, and C_{x3} in case of third overtone crystal usage have a common ground plane. The external components must also be connected to the ground plane. Loops must be made as small as possible in order to keep the noise coupled in via the PCB as small as possible. Also parasitics should stay as small as possible. Values of C_{x1} and C_{x2} should be chosen smaller accordingly to the increase in parasitics of the PCB layout.

All information provided in this document is subject to legal disclaimers.

© NXP B.V. 2011. All rights reserved.

13. Package outline

LQFP64: plastic low profile quad flat package; 64 leads; body 10 x 10 x 1.4 mm **SOT314-2**

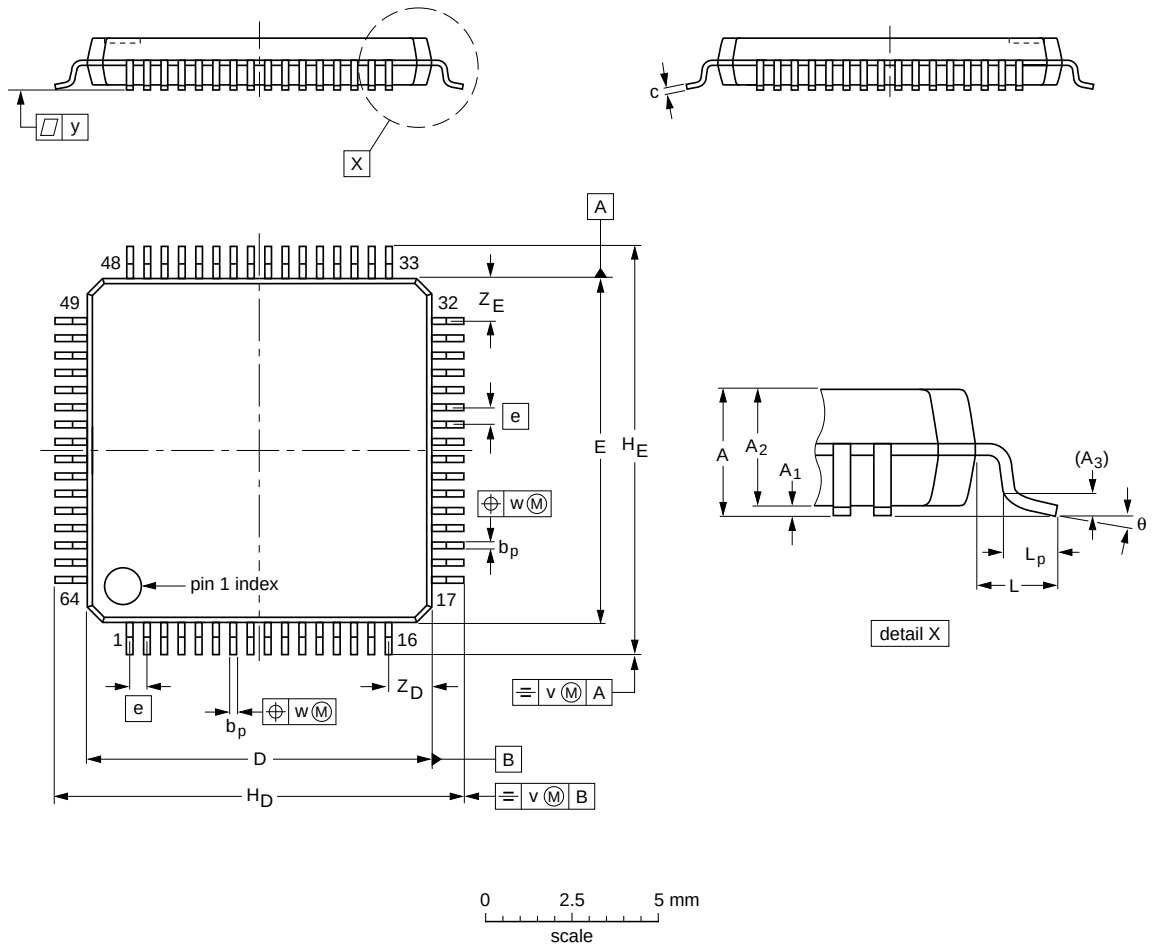

DIMENSIONS (mm are the original dimensions)

UNIT	A max.	A_1	A_2	A_3	b_p	c	D(1)	E(1)	e	H_D	H_E	L	L_p	v	w	y	Z_D(1)	Z_E(1)	θ
mm	1.6	0.20 0.05	1.45 1.35	0.25	0.27 0.17	0.18 0.12	10.1 9.9	10.1 9.9	0.5	12.15 11.85	12.15 11.85	1	0.75 0.45	0.2	0.12	0.1	1.45 1.05	1.45 1.05	7° 0°

Note

1. Plastic or metal protrusions of 0.25 mm maximum per side are not included.

OUTLINE VERSION	REFERENCES				EUROPEAN PROJECTION	ISSUE DATE
	IEC	JEDEC	JEITA			
SOT314-2	136E10	MS-026				~~00-01-19~~ 03-02-25

Fig 16. Package outline SOT314-2 (LQFP64)

All information provided in this document is subject to legal disclaimers.

© NXP B.V. 2011. All rights reserved.

HVQFN64: plastic thermal enhanced very thin quad flat package; no leads; 64 terminals; body 9 x 9 x 0.85 mm **SOT804-2**

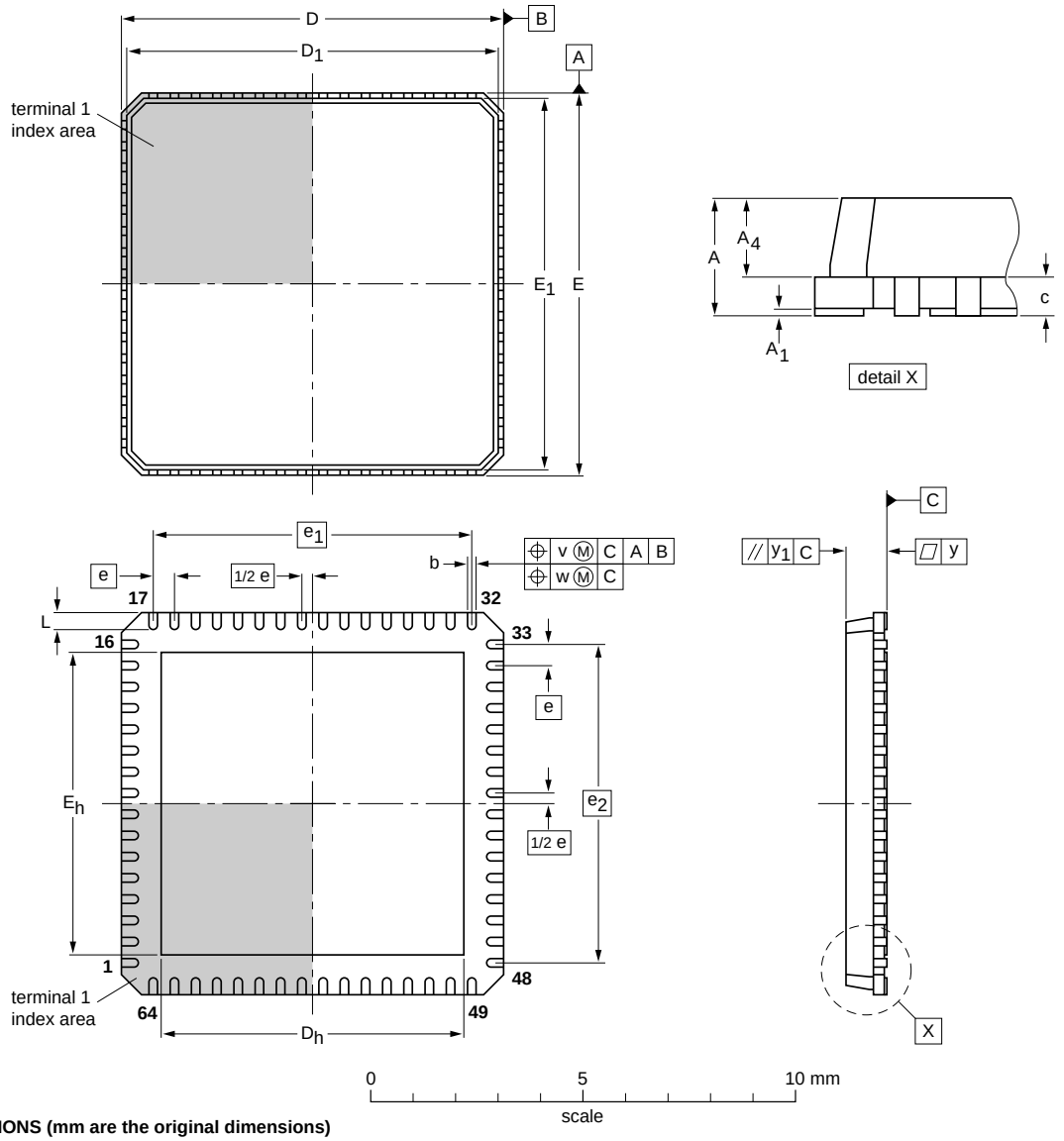

DIMENSIONS (mm are the original dimensions)

UNIT	A max.	A_1	A_4	b	c	D	D_1	D_h	E	E_1	E_h	e	e_1	e_2	L	v	w	y	y_1
mm	1	0.05 0.00	0.80 0.65	0.30 0.18	0.2	9.05 8.95	8.95 8.55	7.25 6.95	9.05 8.95	8.95 8.55	7.25 6.95	0.5	7.5	7.5	0.5 0.3	0.1	0.05	0.05	0.1

OUTLINE VERSION	REFERENCES				EUROPEAN PROJECTION	ISSUE DATE
	IEC	JEDEC	JEITA			
SOT804-2	- - -	MO-220	- - -			04-03-25

Fig 17. Package outline SOT804-2 (HVQFN64)

All information provided in this document is subject to legal disclaimers.

© NXP B.V. 2011. All rights reserved.

14. Abbreviations

Table 13. Acronym list

Acronym	Description
A/D	Analog-to-Digital
ADC	Analog-to-Digital Converter
AHB	Advanced High-performance Bus
AMBA	Advanced Microcontroller Bus Architecture
APB	Advanced Peripheral Bus
BOD	BrownOut Detection
CPU	Central Processing Unit
DAC	Digital-to-Analog Converter
DCC	Debug Communications Channel
ETM	Embedded Trace Macrocell
FIFO	First In, First Out
GPIO	General Purpose Input/Output
JTAG	Joint Test Action Group
LSB	Least Significant Bit
PLL	Phase-Locked Loop
POR	Power-On Reset
PWM	Pulse Width Modulator
RAM	Random Access Memory
SPI	Serial Peripheral Interface
SRAM	Static Random Access Memory
SSP	Synchronous Serial Port
UART	Universal Asynchronous Receiver/Transmitter

All information provided in this document is subject to legal disclaimers.

© NXP B.V. 2011. All rights reserved.

15. Revision history

Table 14. Revision history

Document ID	Release date	Data sheet status	Change notice	Supersedes
LPC2131_32_34_36_38 v.5.1	20110729	Product data sheet	-	LPC2131_32_34_36_38 v.5
Modifications:	• Parameter I_{sink} added in Table 5 “Limiting values”. • Table 6 “Static characteristics”: Updated crystal oscillator specs			
LPC2131_32_34_36_38 v.5	20110202	Product data sheet	-	LPC2131_32_34_36_38 v.4
Modifications:	• Table 3 “Pin description”: Added Table note [9] to RTCX1 and RTCX2 pins. • Table 6 “Static characteristics”, I^2C-bus pins: Changed typical hysteresis voltage from $0.5V_{DD}$ to $0.05V_{DD}$. • Table 6 “Static characteristics”: Removed table note for V_{IH} and V_{IL}. • Changed all occurrences of VPB to APB. • Table 6 “Static characteristics”: Added Table note [6] to V_I. • Table 6 “Static characteristics”, Standard port pins, $\overline{RESET}$, RTCK: V_{hys} hysteresis voltage (0.4 V) moved from typical to minimum. • Table 6 “Static characteristics”: Changed $V_{i(VREF)}$ minimum voltage from 3.0 V to 2.5 V. • Table 6 “Static characteristics”: Updated min, typical and max values for oscillator pins $V_{i(XTAL1)}$, $V_{o(XTAL2)}$, $V_{i(RTCX1)}$, and $V_{o(RTCX2)}$. • Added Section 11 “DAC electrical characteristics”. • Added Section 12 “Application information”.			
LPC2131_32_34_36_38 v.4	20071016	Product data sheet	-	LPC2131_32_34_36_38 v.3
LPC2131_32_34_36_38 v.3	20060921	Product data sheet	-	LPC2131_32_34_36_38 v.2
LPC2131_32_34_36_38 v.2	20050318	Preliminary data sheet	-	LPC2131_2132_2138 v.1
LPC2131_2132_2138 v.1	20041118	Preliminary data sheet	-	-

All information provided in this document is subject to legal disclaimers.

© NXP B.V. 2011. All rights reserved.

16. Legal information

16.1 Data sheet status

Document status[1][2]	Product status[3]	Definition
Objective [short] data sheet	Development	This document contains data from the objective specification for product development.
Preliminary [short] data sheet	Qualification	This document contains data from the preliminary specification.
Product [short] data sheet	Production	This document contains the product specification.

[1] Please consult the most recently issued document before initiating or completing a design.

[2] The term 'short data sheet' is explained in section "Definitions".

[3] The product status of device(s) described in this document may have changed since this document was published and may differ in case of multiple devices. The latest product status information is available on the Internet at URL http://www.nxp.com.

16.2 Definitions

Draft — The document is a draft version only. The content is still under internal review and subject to formal approval, which may result in modifications or additions. NXP Semiconductors does not give any representations or warranties as to the accuracy or completeness of information included herein and shall have no liability for the consequences of use of such information.

Short data sheet — A short data sheet is an extract from a full data sheet with the same product type number(s) and title. A short data sheet is intended for quick reference only and should not be relied upon to contain detailed and full information. For detailed and full information see the relevant full data sheet, which is available on request via the local NXP Semiconductors sales office. In case of any inconsistency or conflict with the short data sheet, the full data sheet shall prevail.

Product specification — The information and data provided in a Product data sheet shall define the specification of the product as agreed between NXP Semiconductors and its customer, unless NXP Semiconductors and customer have explicitly agreed otherwise in writing. In no event however, shall an agreement be valid in which the NXP Semiconductors product is deemed to offer functions and qualities beyond those described in the Product data sheet.

16.3 Disclaimers

Limited warranty and liability — Information in this document is believed to be accurate and reliable. However, NXP Semiconductors does not give any representations or warranties, expressed or implied, as to the accuracy or completeness of such information and shall have no liability for the consequences of use of such information.

In no event shall NXP Semiconductors be liable for any indirect, incidental, punitive, special or consequential damages (including - without limitation - lost profits, lost savings, business interruption, costs related to the removal or replacement of any products or rework charges) whether or not such damages are based on tort (including negligence), warranty, breach of contract or any other legal theory.

Notwithstanding any damages that customer might incur for any reason whatsoever, NXP Semiconductors' aggregate and cumulative liability towards customer for the products described herein shall be limited in accordance with the *Terms and conditions of commercial sale* of NXP Semiconductors.

Right to make changes — NXP Semiconductors reserves the right to make changes to information published in this document, including without limitation specifications and product descriptions, at any time and without notice. This document supersedes and replaces all information supplied prior to the publication hereof.

Suitability for use — NXP Semiconductors products are not designed, authorized or warranted to be suitable for use in life support, life-critical or safety-critical systems or equipment, nor in applications where failure or malfunction of an NXP Semiconductors product can reasonably be expected to result in personal injury, death or severe property or environmental damage. NXP Semiconductors accepts no liability for inclusion and/or use of NXP Semiconductors products in such equipment or applications and therefore such inclusion and/or use is at the customer's own risk.

Applications — Applications that are described herein for any of these products are for illustrative purposes only. NXP Semiconductors makes no representation or warranty that such applications will be suitable for the specified use without further testing or modification.

Customers are responsible for the design and operation of their applications and products using NXP Semiconductors products, and NXP Semiconductors accepts no liability for any assistance with applications or customer product design. It is customer's sole responsibility to determine whether the NXP Semiconductors product is suitable and fit for the customer's applications and products planned, as well as for the planned application and use of customer's third party customer(s). Customers should provide appropriate design and operating safeguards to minimize the risks associated with their applications and products.

NXP Semiconductors does not accept any liability related to any default, damage, costs or problem which is based on any weakness or default in the customer's applications or products, or the application or use by customer's third party customer(s). Customer is responsible for doing all necessary testing for the customer's applications and products using NXP Semiconductors products in order to avoid a default of the applications and the products or of the application or use by customer's third party customer(s). NXP does not accept any liability in this respect.

Limiting values — Stress above one or more limiting values (as defined in the Absolute Maximum Ratings System of IEC 60134) will cause permanent damage to the device. Limiting values are stress ratings only and (proper) operation of the device at these or any other conditions above those given in the Recommended operating conditions section (if present) or the Characteristics sections of this document is not warranted. Constant or repeated exposure to limiting values will permanently and irreversibly affect the quality and reliability of the device.

Terms and conditions of commercial sale — NXP Semiconductors products are sold subject to the general terms and conditions of commercial sale, as published at http://www.nxp.com/profile/terms, unless otherwise agreed in a valid written individual agreement. In case an individual agreement is concluded only the terms and conditions of the respective agreement shall apply. NXP Semiconductors hereby expressly objects to applying the customer's general terms and conditions with regard to the purchase of NXP Semiconductors products by customer.

No offer to sell or license — Nothing in this document may be interpreted or construed as an offer to sell products that is open for acceptance or the grant, conveyance or implication of any license under any copyrights, patents or other industrial or intellectual property rights.

Export control — This document as well as the item(s) described herein may be subject to export control regulations. Export might require a prior authorization from national authorities.

All information provided in this document is subject to legal disclaimers.

© NXP B.V. 2011. All rights reserved.

Non-automotive qualified products — Unless this data sheet expressly states that this specific NXP Semiconductors product is automotive qualified, the product is not suitable for automotive use. It is neither qualified nor tested in accordance with automotive testing or application requirements. NXP Semiconductors accepts no liability for inclusion and/or use of non-automotive qualified products in automotive equipment or applications.

In the event that customer uses the product for design-in and use in automotive applications to automotive specifications and standards, customer (a) shall use the product without NXP Semiconductors' warranty of the product for such automotive applications, use and specifications, and (b) whenever customer uses the product for automotive applications beyond NXP Semiconductors' specifications such use shall be solely at customer's own risk, and (c) customer fully indemnifies NXP Semiconductors for any liability, damages or failed product claims resulting from customer design and use of the product for automotive applications beyond NXP Semiconductors' standard warranty and NXP Semiconductors' product specifications.

16.4 Trademarks

Notice: All referenced brands, product names, service names and trademarks are the property of their respective owners.

I²C-bus — logo is a trademark of NXP B.V.

17. Contact information

For more information, please visit: **http://www.nxp.com**

For sales office addresses, please send an email to: **salesaddresses@nxp.com**

All information provided in this document is subject to legal disclaimers.

© NXP B.V. 2011. All rights reserved.

18. Contents

1 General description . . . 1
2 Features and benefits . . . 1
2.1 Enhancements brought by LPC213x/01 devices . . . 1
2.2 Key features common for LPC213x and LPC213x/01 . . . 1
3 Ordering information . . . 2
3.1 Ordering options . . . 3
4 Block diagram . . . 4
5 Pinning information . . . 5
5.1 Pinning . . . 5
5.2 Pin description . . . 9
6 Functional description . . . 13
6.1 Architectural overview . . . 13
6.2 On-chip flash program memory . . . 13
6.3 On-chip static RAM . . . 13
6.4 Memory map . . . 14
6.5 Interrupt controller . . . 15
6.5.1 Interrupt sources . . . 15
6.6 Pin connect block . . . 16
6.7 General purpose parallel I/O and Fast I/O . . . 16
6.7.1 Features . . . 16
6.7.2 Fast I/O features available in LPC213x/01 only . . . 17
6.8 10-bit ADC . . . 17
6.8.1 Features . . . 17
6.8.2 ADC features available in LPC213x/01 only . . . 17
6.9 10-bit DAC . . . 17
6.9.1 Features . . . 17
6.10 UARTs . . . 17
6.10.1 Features . . . 17
6.10.2 UART features available in LPC213x/01 only . . . 18
6.11 I^2C-bus serial I/O controller . . . 18
6.11.1 Features . . . 18
6.12 SPI serial I/O controller . . . 18
6.12.1 Features . . . 19
6.13 SSP serial I/O controller . . . 19
6.13.1 Features . . . 19
6.14 General purpose timers/external event counters . . . 19
6.14.1 Features . . . 19
6.15 Watchdog timer . . . 20
6.15.1 Features . . . 20
6.16 Real-time clock . . . 20
6.16.1 Features . . . 20
6.17 Pulse width modulator . . . 21
6.17.1 Features . . . 21
6.18 System control . . . 22
6.18.1 Crystal oscillator . . . 22
6.18.2 PLL . . . 22
6.18.3 Reset and wake-up timer . . . 22
6.18.4 Brownout detector . . . 23
6.18.5 Code security . . . 23
6.18.6 External interrupt inputs . . . 23
6.18.7 Memory Mapping Control . . . 23
6.18.8 Power Control . . . 24
6.18.9 APB bus . . . 24
6.19 Emulation and debugging . . . 24
6.19.1 EmbeddedICE . . . 24
6.19.2 Embedded trace . . . 25
6.19.3 RealMonitor . . . 25
7 Limiting values . . . 26
8 Static characteristics . . . 27
9 Dynamic characteristics . . . 29
9.1 Timing . . . 30
9.2 LPC2138 power consumption measurements 30
10 ADC electrical characteristics . . . 32
11 DAC electrical characteristics . . . 35
12 Application information . . . 36
12.1 Crystal oscillator XTAL input and component selection . . . 36
12.2 RTC 32 kHz oscillator component selection . 38
12.3 XTAL and RTCX Printed Circuit Board (PCB) layout guidelines . . . 38
13 Package outline . . . 39
14 Abbreviations . . . 41
15 Revision history . . . 42
16 Legal information . . . 43
16.1 Data sheet status . . . 43
16.2 Definitions . . . 43
16.3 Disclaimers . . . 43
16.4 Trademarks . . . 44
17 Contact information . . . 44
18 Contents . . . 45

Please be aware that important notices concerning this document and the product(s) described herein, have been included in section 'Legal information'.

© NXP B.V. 2011. All rights reserved.

For more information, please visit: http://www.nxp.com
For sales office addresses, please send an email to: salesaddresses@nxp.com

Date of release: 29 July 2011
Document identifier: LPC2131_32_34_36_38

О компании

ООО "ТрейдЭлектроникс" - это оперативные поставки широкого спектра электронных компонентов отечественного и импортного производства напрямую от производителей и с крупнейших мировых складов. Реализуемая нашей компанией продукция насчитывает более полумиллиона наименований.

Благодаря этому наша компания предлагает к поставке практически не ограниченный ассортимент компонентов как оптовыми, мелкооптовыми партиями, так и в розницу.

Наличие собственной эффективной системы логистики обеспечивает надежную поставку продукции по конкурентным ценам в точно указанные сроки.

Срок поставки со стоков в **Европе и Америке – от 3 до 14 дней.**

Срок поставки из **Азии – от 10 дней.**

Благодаря развитой сети поставщиков, помогаем в поиске и приобретении экзотичных или снятых с производства компонентов.

Предоставляем спец цены на элементы для создания инженерных сэмплов.

Упорный труд, качественный результат дают нам право быть уверенными в себе и надежными для наших клиентов.

Наша компания это:

- Гарантия качества поставляемой продукции
- Широкий ассортимент
- Минимальные сроки поставок
- Техническая поддержка
- Подбор комплектации
- Индивидуальный подход
- Гибкое ценообразование

Наша организация особенно сильна в поставках модулей, микросхем, пассивных компонентов, ксайленсах (XC), EPF, EPM и силовой электроники.

Большой выбор предлагаемой продукции, различные виды оплаты и доставки, позволят Вам сэкономить время и получить максимум выгоды от сотрудничества с нами!

Trade Electronics.ru

гарантия бесперебойности производства и качества выпускаемой продукции

Перечень производителей, продукцию которых мы поставляем на российский рынок

AMD
ANALOG DEVICES
BOURNS
Coilcraft
élantec Semiconductor, Inc.
HARRIS
Infineon
JRC
MICREL
MOTOROLA
nichicon
PHILIPS
ROHM
SGS-THOMSON
Sipex
TAIYO YUDEN
TOKO
ZILOG
Winbond
Allegro
ATMEL
BURR - BROWN
EXAR
HITACHI
intel
Lattice
muRata
OKI
QUALCOMM
SAMSUNG
SHARP
SONY
TDK
TOSHIBA
KYOCERA
ALTERA
AVX
CITILYST
CYPRESS
FAIRCHILD SEMICONDUCTOR
HOLTEK
International IOR Rectifier
LINEAR TECHNOLOGY
MITSUBISHI
National Semiconductor
ON Semiconductor
REALTEK
SANYO
SHINDENGEN
SGS
TECCOR
TUNDRA
XILINX
Amphenol
Bay Linear
CIRRUS LOGIC
DALLAS
FUJITSU
IDT
intersil
MAXIM
molex
NEC
Panasonic
RENESAS
SII
SIEMENS
ST
Texas Instruments
VISHAY
ZETEX SEMICONDUCTORS

Trade Electronics.ru

гарантия бесперебойности производства и качества выпускаемой продукции

С удовольствием будем прорабатывать для Вас поставки всех необходимых компонентов по текущим запросам для скорейшего выявления групп элементов, по которым сотрудничество именно с нашей компанией будет для Вас максимально выгодным!

С уважением,

Менеджер отдела продаж ООО

«Трейд Электроникс»

Шишлаков Евгений

8 (495)668-30-28 доб 169

manager28@tradeelectronics.ru

http://www.tradeelectronics.ru/