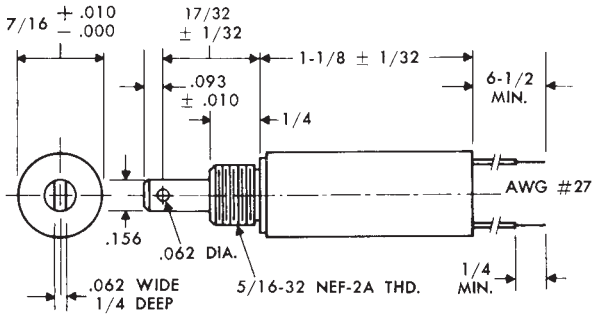


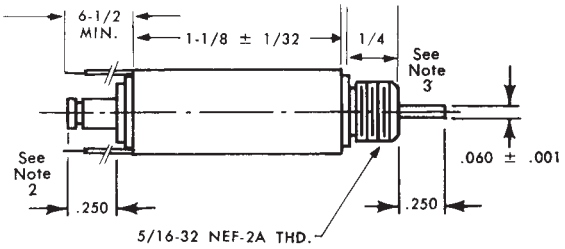


**Notes:**
1. Solenoid shown in energized position.
2. .250 Plunger configuration shown supplied for spring return only.
3. Largest size thread that may be threaded on push rod #0.
4. Push force approximately 90% of pull forces shown.

## Type C7-18

| Specifications | |
|---|---|
| **Size** | 7/16″ Diameter x 1⅛″ Long (From Mounting Surface) |
| **Weight** | ½ Oz. Max. |
| **Mounting** | 5/16-32 Threaded Bushing (Nut and Lockwasher Supplied) |
| **Dielectric Strength** | 500 VRMS |
| **Insulation Material** | Class "A" (105° C) |
| **Life Expectancy** | 10 Million Cycles at Rated Load |
| **Nominal Coil Power** | Continuous Duty—2 Watts<br>Intermittent Duty (10%)—10 Watts<br>(One Minute Max. on Time) |

| Standard Coils | | |
|---|---|---|
| **Nominal Volts (D.C.)** | **Resistance (OHMS ± 10%) at 25°C** | |
| | **Continuous Duty** | **Intermittent Duty** |
| 6 | 18 | 3.6 |
| 12 | 72 | 14.4 |
| 24 | 288 | 58.0 |
| 110 | 6613 | 1323.0 |
| Other Coils and Duty Cycles Available Upon Request | | |

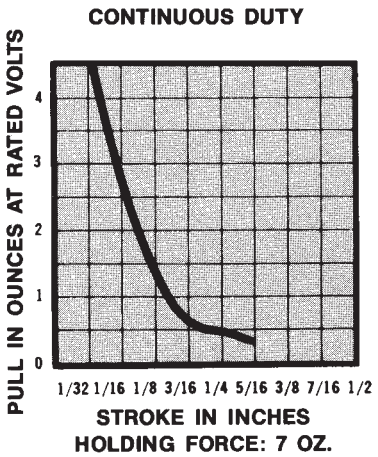


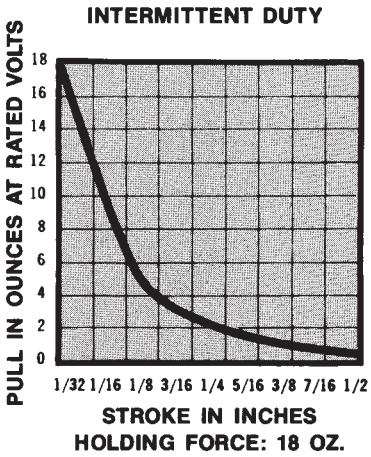

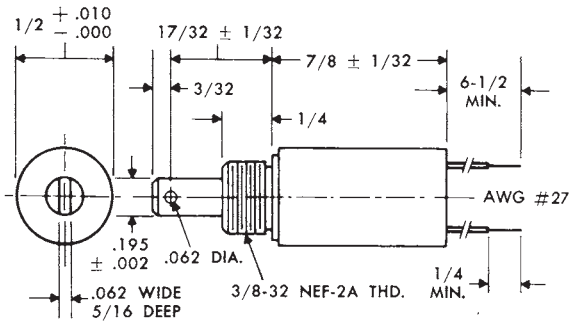


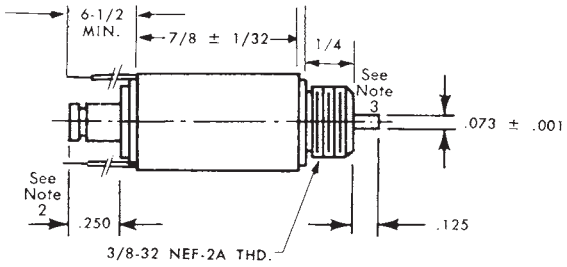


**Notes:**
1. Solenoid shown in energized position.
2. .250 Plunger configuration shown supplied for spring return only.
3. Largest size thread that may be threaded on push rod #1.
4. Push force approximately 90% of pull forces shown.

## Type C8-14

| Specifications | |
|---|---|
| **Size** | ½" Diameter x ⅞" Long (From Mounting Surface) |
| **Weight** | 1 Oz. Max. |
| **Mounting** | ⅜-32 Threaded Bushing (Nut and Lockwasher Supplied) |
| **Dielectric Strength** | 500 VRMS |
| **Insulation Material** | Class "A" (105° C) |
| **Life Expectancy** | 10 Million Cycles at Rated Load |
| **Nominal Coil Power** | Continuous Duty—2.4 Watts<br>Intermittent Duty (10%)—7 Watts<br>(One Minute Max. on Time) |

| Standard Coils | | |
|---|---|---|
| **Nominal Volts (D.C.)** | **Resistance (OHMS ± 10%) at 25°C** | |
| | **Continuous Duty** | **Intermittent Duty** |
| 6 | 15 | 5.0 |
| 12 | 60 | 20.6 |
| 24 | 240 | 82.0 |
| 110 | 5510 | 1890.0 |
| Other Coils and Duty Cycles Available Upon Request | | |

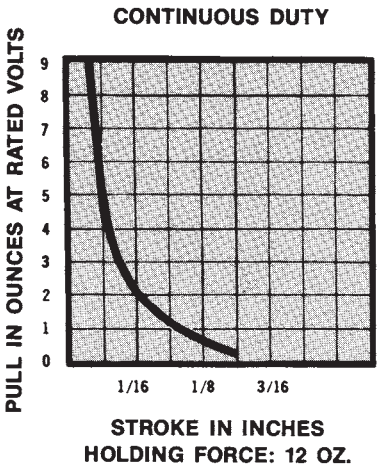


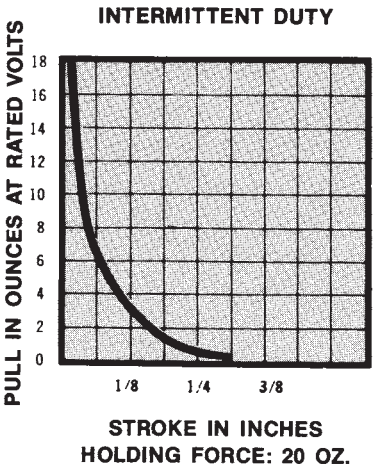

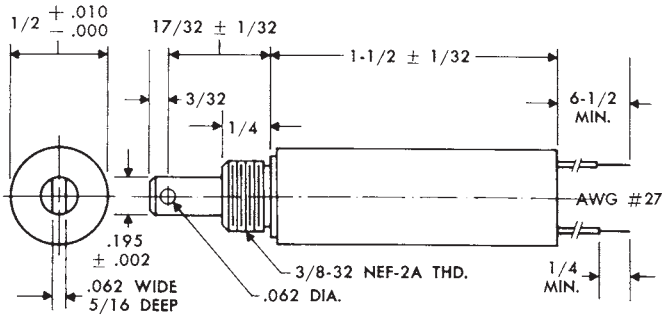


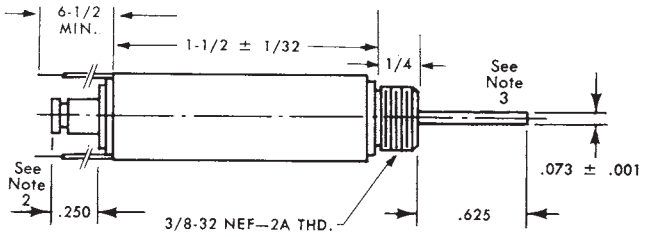


**Notes:**
1. Solenoid shown in energized position.
2. .250 Plunger configuration shown supplied for spring return only.
3. Largest size thread that may be threaded on push rod #1.
4. Push force approximately 90% of pull forces shown.

## Type C8-24

| Specifications | |
|---|---|
| **Size** | ½" Diameter x 1½" Long (From Mounting Surface) |
| **Weight** | 1½ Oz. Max. |
| **Mounting** | ⅜-32 Threaded Bushing (Nut and Lockwasher Supplied) |
| **Dielectric Strength** | 500 VRMS |
| **Insulation Material** | Class "A" (105° C) |
| **Life Expectancy** | 10 Million Cycles at Rated Load |
| **Nominal Coil Power** | Continuous Duty—3.5 Watts<br>Intermittent Duty (10%)—15 Watts<br>(One Minute Max. on Time) |

| Standard Coils | | |
|---|---|---|
| **Nominal Volts (D.C.)** | **Resistance (OHMS ± 10%) at 25°C** | |
| | **Continuous Duty** | **Intermittent Duty** |
| 6 | 10.3 | 2.4 |
| 12 | 41.0 | 9.6 |
| 24 | 165.0 | 38.5 |
| 110 | 3780.0 | 882.0 |
| Other Coils and Duty Cycles Available Upon Request | | |

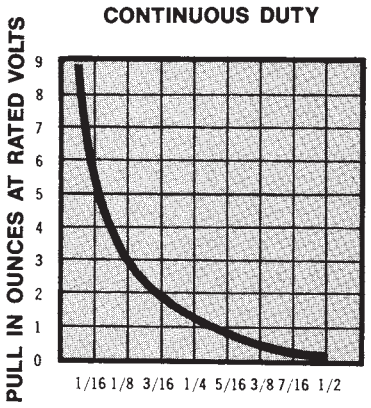


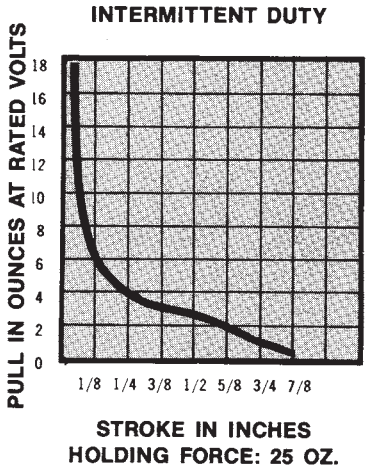

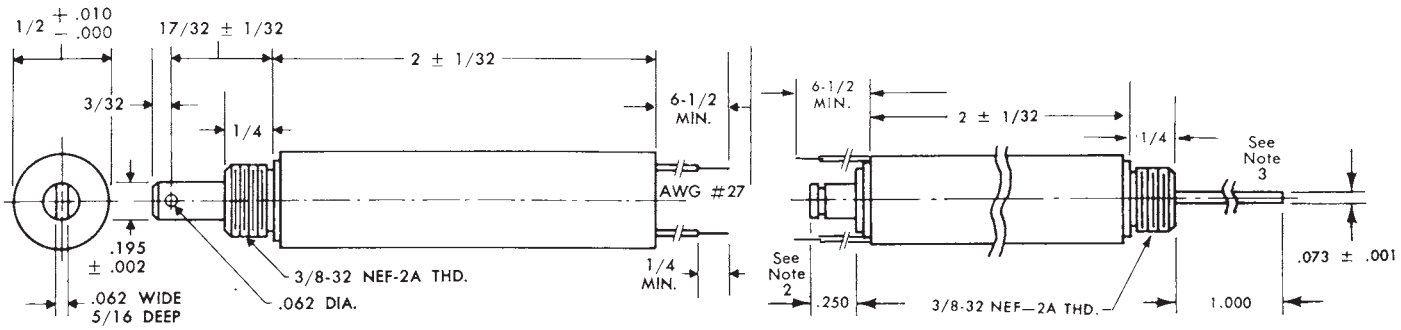


**Notes:**
1. Solenoid shown in energized position.
2. .250 Plunger configuration shown supplied for spring return only.
3. Largest size thread that may be threaded on push rod #1.
4. Push force approximately 90% of pull forces shown.

## Type C8-32

| Specifications | |
|---|---|
| **Size** | ½" Diameter x 2" Long (From Mounting Surface) |
| **Weight** | 2 Oz. Max. |
| **Mounting** | ⅜-32 Threaded Bushing (Nut and Lockwasher Supplied) |
| **Dielectric Strength** | 500 VRMS |
| **Insulation Material** | Class "A" (105° C) |
| **Life Expectancy** | 10 Million Cycles at Rated Load |
| **Nominal Coil Power** | Continuous Duty—4 Watts<br>Intermittent Duty (10%)—20 Watts<br>(One Minute Max. on Time) |

| Standard Coils | | |
|---|---|---|
| **Nominal Volts (D.C.)** | **Resistance (OHMS ± 10%) at 25°C** | |
| | **Continuous Duty** | **Intermittent Duty** |
| 6 | 9 | 1.8 |
| 12 | 36 | 7.2 |
| 24 | 145 | 29.0 |
| 110 | 3306 | 661.0 |
| Other Coils and Duty Cycles Available Upon Request | | |

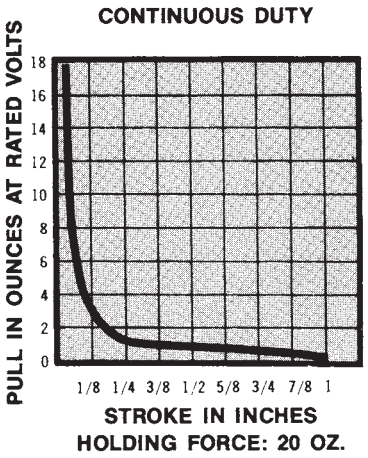


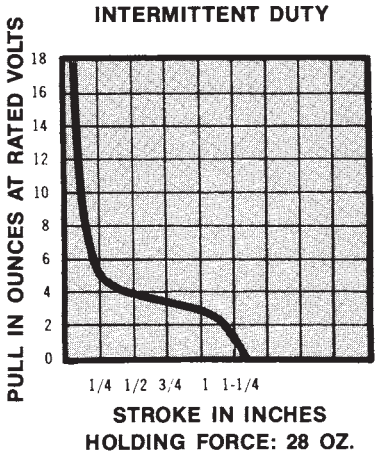

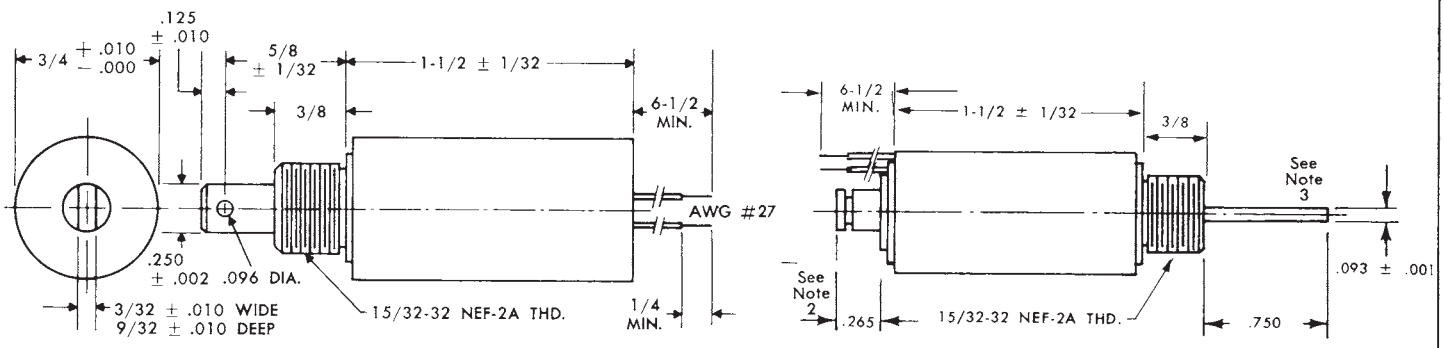


**Notes:**
1. Solenoid shown in energized position.
2. .265 Plunger configuration shown supplied for spring return only.
3. Largest size thread that may be threaded on push rod #3.
4. Push force approximately 90% of pull forces shown.

## Type C12-24

| Specifications | |
|---|---|
| **Size** | ¾″ Diameter x 1½″ Long (From Mounting Surface) |
| **Weight** | 3 Oz. Max. |
| **Mounting** | 15/32-32 Threaded Bushing (Nut and Lockwasher Supplied) |
| **Dielectric Strength** | 500 VRMS |
| **Insulation Material** | Class "A" (105° C) |
| **Life Expectancy** | 10 Million Cycles at Rated Load |
| **Nominal Coil Power** | Continuous Duty—3.5 Watts<br>Intermittent Duty (10%)—22 Watts<br>(One Minute Max. on Time) |

| Standard Coils | | |
|---|---|---|
| **Nominal Volts (D.C.)** | **Resistance (OHMS ± 10%) at 25°C** | |
| | **Continuous Duty** | **Intermittent Duty** |
| 6 | 10.3 | 1.6 |
| 12 | 41.0 | 6.5 |
| 24 | 165.0 | 26.0 |
| 110 | 3780.0 | 600.0 |
| Other Coils and Duty Cycles Available Upon Request | | |

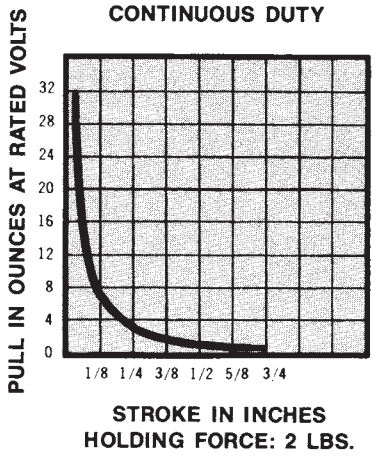


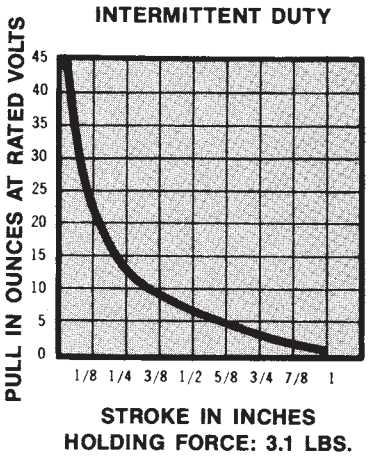

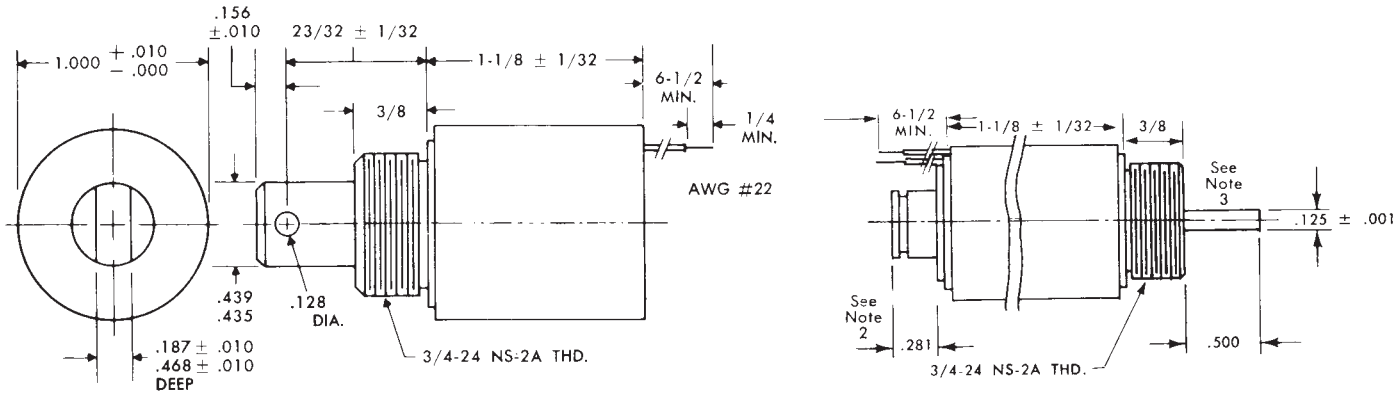


**Notes:**
1. Solenoid shown in energized position.
2. .281 Plunger configuration shown supplied for spring return only.
3. Largest size thread that may be threaded on push rod #5.
4. Push force approximately 90% of pull forces shown.

## Type C16-18

| Specifications | |
|---|---|
| **Size** | 1″ Diameter x 1⅛″ Long (From Mounting Surface) |
| **Weight** | 4 Oz. Max. |
| **Mounting** | ¾-24 Threaded Bushing (Nut and Lockwasher Supplied) |
| **Dielectric Strength** | 500 VRMS |
| **Insulation Material** | Class "A" (105° C) |
| **Life Expectancy** | 10 Million Cycles at Rated Load |
| **Nominal Coil Power** | Continuous Duty—4 Watts<br>Intermittent Duty (10%)—19 Watts<br>(One Minute Max. on Time) |

**Standard Coils**

| Nominal Volts (D.C.) | Resistance (OHMS ± 10%) at 25°C | |
|---|---|---|
| | Continuous Duty | Intermittent Duty |
| 6 | 9 | 1.9 |
| 12 | 36 | 7.6 |
| 24 | 144 | 30.0 |
| 110 | 3306 | 696.0 |

Other Coils and Duty Cycles Available Upon Request

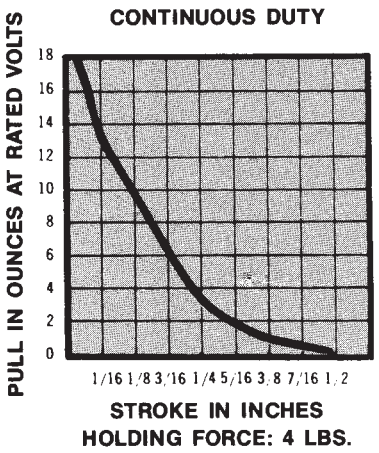


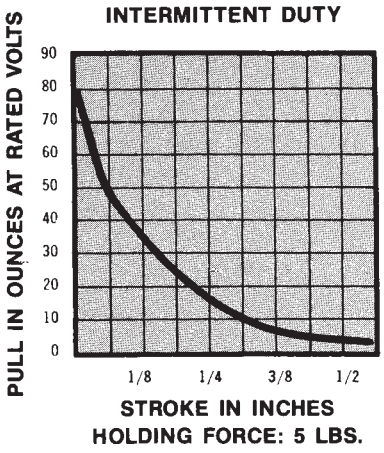

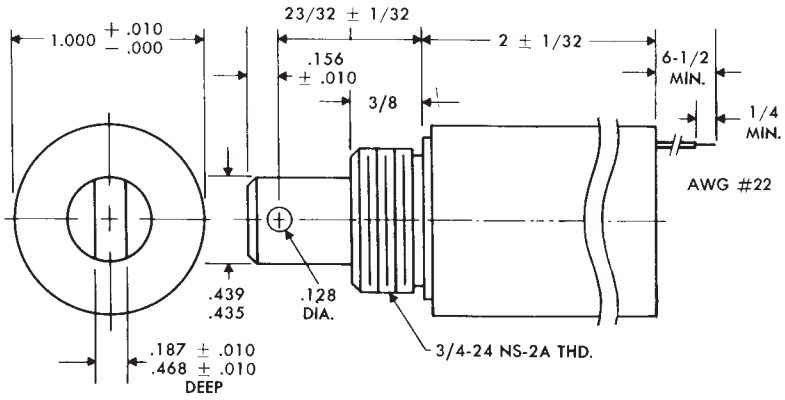


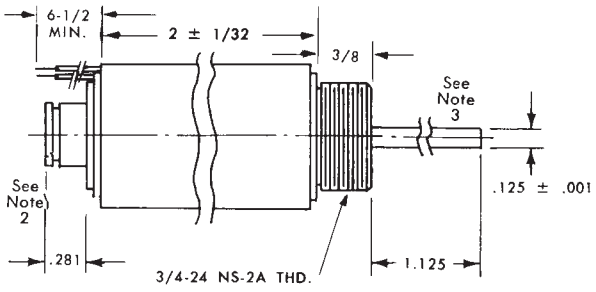


**Notes:**
1. Solenoid shown in energized position.
2. .281 Plunger configuration shown supplied for spring return only.
3. Largest size thread that may be threaded on push rod #5.
4. Push force approximately 90% of pull forces shown.

## Type C16-32

| Specifications | |
|---|---|
| **Size** | 1″ Diameter x 2″ Long (From Mounting Surface) |
| **Weight** | 5½ Oz. Max. |
| **Mounting** | ¾-24 Threaded Bushing (Nut and Lockwasher Supplied) |
| **Dielectric Strength** | 500 VRMS |
| **Insulation Material** | Class "A" (105° C) |
| **Life Expectancy** | 10 Million Cycles at Rated Load |
| **Nominal Coil Power** | Continuous Duty—5.5 Watts<br>Intermittent Duty (10%)—38 Watts<br>(One Minute Max. on Time) |

**Standard Coils**

| Nominal Volts (D.C.) | Resistance (OHMS ± 10%) at 25°C | |
|---|---|---|
| | Continuous Duty | Intermittent Duty |
| 6 | 6.5 | .95 |
| 12 | 26.0 | 3.80 |
| 24 | 105.0 | 15.00 |
| 110 | 2405 | 348.0 |
| Other Coils and Duty Cycles Available Upon Request | | |

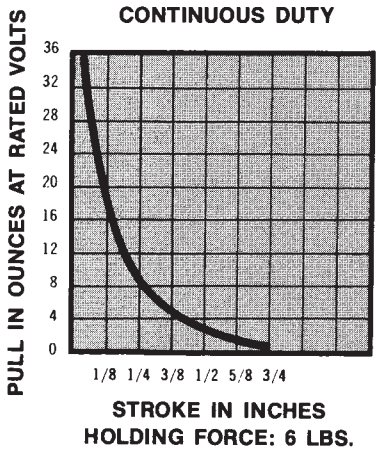


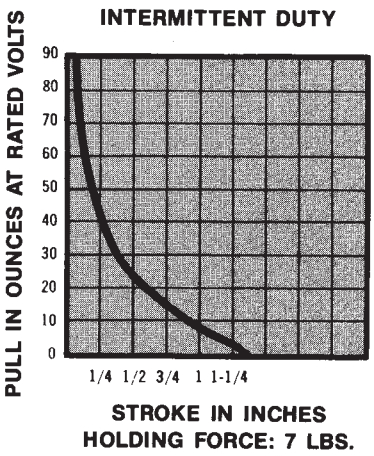

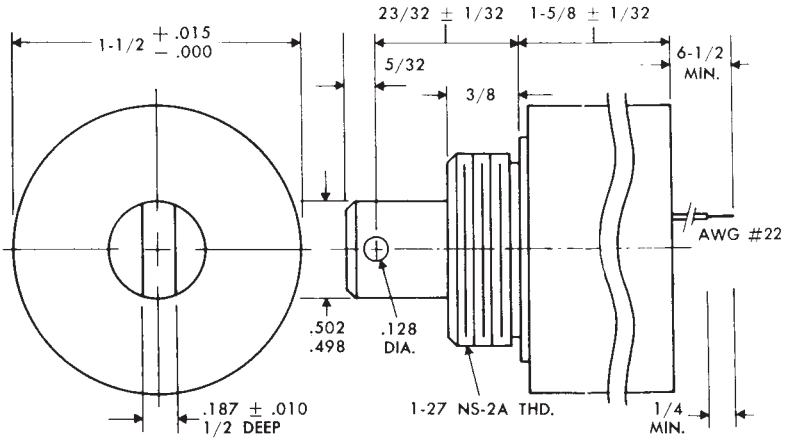


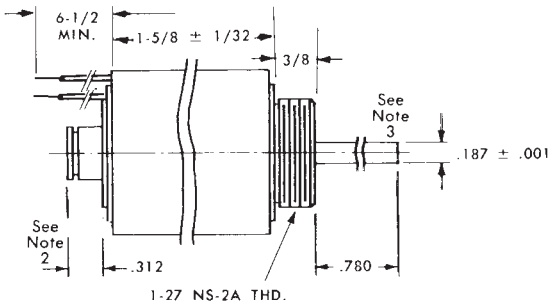


**Notes:**
1. Solenoid shown in energized position.
2. .312 Plunger configuration shown supplied for spring return only.
3. Largest size thread that may be threaded on push rod #10.
4. Push force approximately 90% of pull forces shown.

## Type C24-26

| Specifications | |
|---|---|
| **Size** | 1½" Diameter x 1⅝" Long (From Mounting Surface) |
| **Weight** | 10 Oz. Max. |
| **Mounting** | 1-27 Threaded Bushing (Nut and Lockwasher Supplied) |
| **Dielectric Strength** | 500 VRMS |
| **Insulation Material** | Class "A" (105° C) |
| **Life Expectancy** | 10 Million Cycles at Rated Load |
| **Nominal Coil Power** | Continuous Duty—7 Watts<br>Intermittent Duty (10%)—40 Watts<br>(One Minute Max. on Time) |

| Standard Coils | | |
|---|---|---|
| **Nominal Volts (D.C.)** | **Resistance (OHMS ± 10%) at 25°C** | |
| | **Continuous Duty** | **Intermittent Duty** |
| 6 | 5.0 | .9 |
| 12 | 20.6 | 3.6 |
| 24 | 82.0 | 14.0 |
| 110 | 1890.0 | 331.0 |
| Other Coils and Duty Cycles Available Upon Request | | |

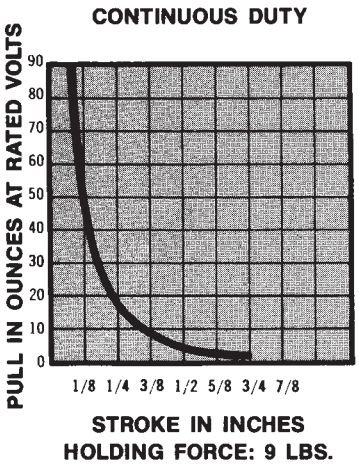


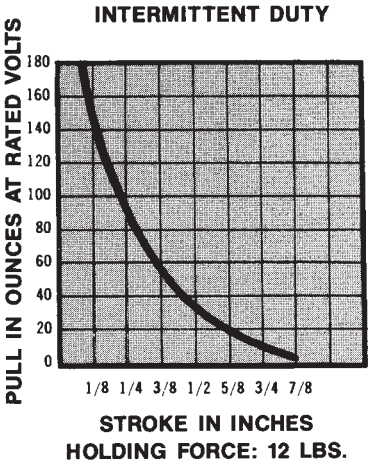

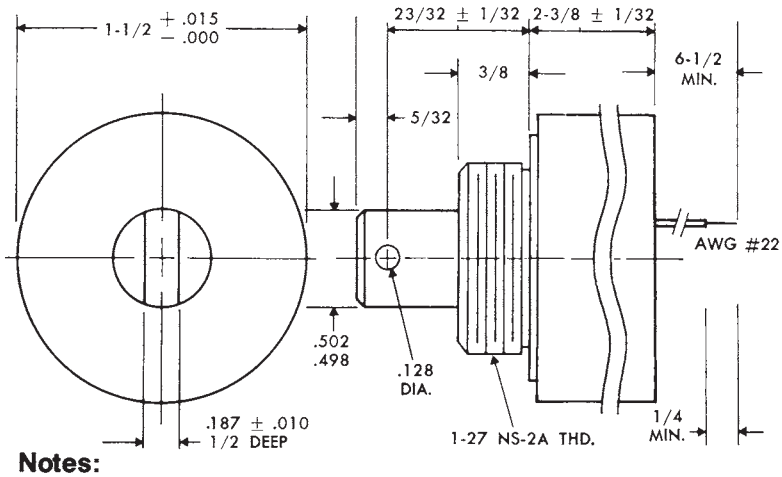


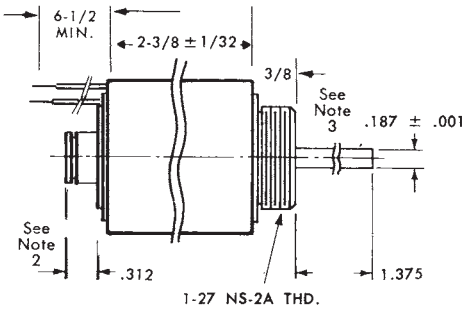


**Notes:**
1. Solenoid shown in energized position.
2. .312 Plunger configuration shown supplied for spring return only.
3. Largest size thread that may be threaded on push rod #10.
4. Push force approximately 90% of pull forces shown.

## Type C24-38

| Specifications | |
|---|---|
| **Size** | 1½" Diameter x 2⅜" Long (From Mounting Surface) |
| **Weight** | 18 Oz. Max. |
| **Mounting** | 1-27 Threaded Bushing (Nut and Lockwasher Supplied) |
| **Dielectric Strength** | 500 VRMS |
| **Insulation Material** | Class "A" (105° C) |
| **Life Expectancy** | 10 Million Cycles at Rated Load |
| **Nominal Coil Power** | Continuous Duty—10 Watts<br>Intermittent Duty (10%)—60 Watts<br>(One Minute Max. on Time) |

| Standard Coils | | |
|---|---|---|
| **Nominal Volts (D.C.)** | **Resistance (OHMS ± 10%) at 25°C** | |
| | **Continuous Duty** | **Intermittent Duty** |
| 6 | 3.6 | .6 |
| 12 | 14.5 | 2.4 |
| 24 | 58.0 | 9.6 |
| 110 | 1323.0 | 220.0 |
| Other Coils and Duty Cycles Available Upon Request | | |

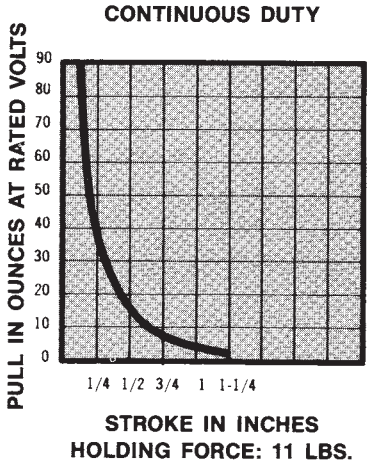


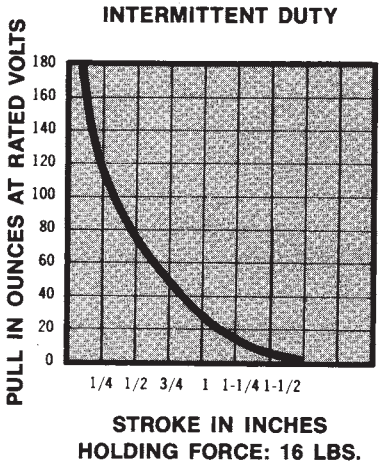

## О компании

ООО "ТрейдЭлектроникс" - это оперативные поставки широкого спектра электронных компонентов отечественного и импортного производства напрямую от производителей и с крупнейших мировых складов. Реализуемая нашей компанией продукция насчитывает более полумиллиона наименований.

Благодаря этому наша компания предлагает к поставке практически не ограниченный ассортимент компонентов как оптовыми, мелкооптовыми партиями, так и в розницу.

Наличие собственной эффективной системы логистики обеспечивает надежную поставку продукции по конкурентным ценам в точно указанные сроки.

Срок поставки со стоков в **Европе и Америке – от 3 до 14 дней.**

Срок поставки из **Азии – от 10 дней.**

Благодаря развитой сети поставщиков, помогаем в поиске и приобретении экзотичных или снятых с производства компонентов.

Предоставляем спец цены на элементы для создания инженерных сэмплов.

**Упорный труд, качественный результат дают нам право быть уверенными в себе и надежными для наших клиентов.**

## Наша компания это:

- Гарантия качества поставляемой продукции
- Широкий ассортимент
- Минимальные сроки поставок
- Техническая поддержка
- Подбор комплектации
- Индивидуальный подход
- Гибкое ценообразование

Наша организация особенно сильна в поставках модулей, микросхем, пассивных компонентов, ксайленсах (XC), EPF, EPM и силовой электроники.

Большой выбор предлагаемой продукции, различные виды оплаты и доставки, позволят Вам сэкономить время и получить максимум выгоды от сотрудничества с нами!

Trade Electronics.ru

гарантия бесперебойности производства и качества выпускаемой продукции

**Перечень производителей, продукцию которых мы поставляем на российский рынок**

AMD
ANALOG DEVICES
BOURNS
Coilcraft
élantec Semiconductor, Inc.
HARRIS
Infineon
JRC
MICREL
MOTOROLA
nichicon
PHILIPS
ROHM
SGS-THOMSON
Sipex
TAIYO YUDEN
TOKO
ZILOG
Winbond
Allegro
ATMEL
BURR - BROWN
EXAR
HITACHI
intel
Lattice
muRata
OKI
QUALCOMM
SAMSUNG
SHARP
SONY
TDK
TOSHIBA
KYOCERA
ALTERA
AVX
CITILYST
CYPRESS
FAIRCHILD SEMICONDUCTOR
HOLTEK
International IOR Rectifier
LINEAR TECHNOLOGY
MITSUBISHI
National Semiconductor
ON Semiconductor
REALTEK
SANYO
SHINDENGEN
SGS
TECCOR
TUNDRA
XILINX
Amphenol
Bay Linear
CIRRUS LOGIC
DALLAS
FUJITSU
IDT
intersil
MAXIM
molex
NEC
Panasonic
RENESAS
SII
SIEMENS
ST
Texas Instruments
VISHAY
ZETEX SEMICONDUCTORS

Trade Electronics.ru

гарантия бесперебойности производства и качества выпускаемой продукции

С удовольствием будем прорабатывать для Вас поставки всех необходимых компонентов по текущим запросам для скорейшего выявления групп элементов, по которым сотрудничество именно с нашей компанией будет для Вас максимально выгодным!

С уважением,

Менеджер отдела продаж ООО

«Трейд Электроникс»

Шишлаков Евгений

8 (495)668-30-28 доб 169

manager28@tradeelectronics.ru

http://www.tradeelectronics.ru/