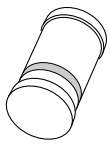

BZV55 series

Voltage regulator diodes

Rev. 5 — 26 January 2011 | Product data sheet

1. Product profile

1.1 General description

Low-power voltage regulator diodes in small hermetically sealed glass SOD80C Surface-Mounted Device (SMD) packages. The diodes are available in the normalized E24 ±2 % (BZV55-B) and approximately ±5 % (BZV55-C) tolerance range.
The series consists of 37 types with nominal working voltages from 2.4 V to 75 V.

1.2 Features and benefits

- Non-repetitive peak reverse power dissipation: ≤ 40 W
- Total power dissipation: ≤ 500 mW
- Two tolerance series: ±2 % and ±5 %
- Wide working voltage range: nominal 2.4 V to 75 V (E24 range)
- Low differential resistance
- Small hermetically sealed glass SMD package

1.3 Applications

- General regulation functions

1.4 Quick reference data

Table 1. Quick reference data

Symbol	Parameter	Conditions		Min	Typ	Max	Unit
V_F	forward voltage	I_F = 10 mA		-	-	0.9	V
P_{ZSM}	non-repetitive peak reverse power dissipation		[1]	-	-	40	W

[1] t_p = 100 µs; square wave; T_j = 25 °C prior to surge

2. Pinning information

Table 2. Pinning

Pin	Description		Simplified outline	Graphic symbol
1	cathode	[1]		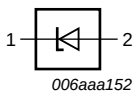
2	anode			

[1] The marking band indicates the cathode.

3. Ordering information

Table 3. Ordering information

Type number	Package		
	Name	Description	Version
BZV55-B2V4 to BZV55-C75[1]	-	hermetically sealed glass surface-mounted package; 2 connectors	SOD80C

[1] The series consists of 74 types with nominal working voltages from 2.4 V to 75 V.

4. Marking

Table 4. Marking codes

Type number	Marking code
BZV55-B2V4 to BZV55-C75	marking band

5. Limiting values

Table 5. Limiting values

In accordance with the Absolute Maximum Rating System (IEC 60134).

Symbol	Parameter	Conditions		Min	Max	Unit
I_F	forward current			-	250	mA
I_{ZSM}	non-repetitive peak reverse current		[1]	-	see Table 8 and 9	
P_{ZSM}	non-repetitive peak reverse power dissipation		[1]	-	40	W
P_{tot}	total power dissipation	$T_{amb} \leq 50$ °C	[2]	-	400	mW
		$T_{tp} \leq 50$ °C	[2]	-	500	mW
T_{stg}	storage temperature			–65	+200	°C
T_j	junction temperature			–65	+200	°C

[1] t_p = 100 μs; square wave; T_j = 25 °C prior to surge

[2] Device mounted on a ceramic substrate of 10 × 10 × 0.6 mm.

6. Thermal characteristics

Table 6. Thermal characteristics

Symbol	Parameter	Conditions		Min	Typ	Max	Unit
$R_{th(j-a)}$	thermal resistance from junction to ambient	in free air	[1]	-	-	380	K/W
$R_{th(j-sp)}$	thermal resistance from junction to solder point			-	-	300	K/W

[1] Device mounted on a ceramic substrate of 10 × 10 × 0.6 mm.

All information provided in this document is subject to legal disclaimers.

© NXP B.V. 2011. All rights reserved.

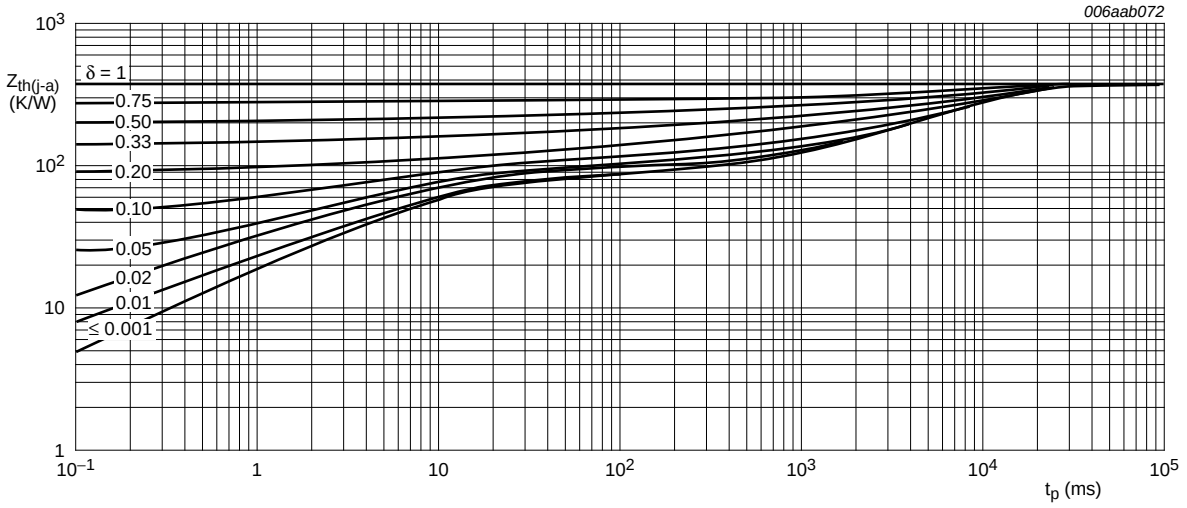

Fig 1. Transient thermal impedance from junction to ambient as a function of pulse duration; typical values

7. Characteristics

Table 7. Characteristics

T_j = 25 °C unless otherwise specified.

Symbol	Parameter	Conditions	Min	Typ	Max	Unit
V_F	forward voltage	I_F = 10 mA	-	-	0.9	V
I_R	reverse current					
	BZV55-B/C2V4	V_R = 1 V	-	-	50	μA
	BZV55-B/C2V7	V_R = 1 V	-	-	20	μA
	BZV55-B/C3V0	V_R = 1 V	-	-	10	μA
	BZV55-B/C3V3	V_R = 1 V	-	-	5	μA
	BZV55-B/C3V6	V_R = 1 V	-	-	5	μA
	BZV55-B/C3V9	V_R = 1 V	-	-	3	μA
	BZV55-B/C4V3	V_R = 1 V	-	-	3	μA
	BZV55-B/C4V7	V_R = 2 V	-	-	3	μA
	BZV55-B/C5V1	V_R = 2 V	-	-	2	μA
	BZV55-B/C5V6	V_R = 2 V	-	-	1	μA
	BZV55-B/C6V2	V_R = 4 V	-	-	3	μA
	BZV55-B/C6V8	V_R = 4 V	-	-	2	μA
	BZV55-B/C7V5	V_R = 5 V	-	-	1	μA
	BZV55-B/C8V2	V_R = 5 V	-	-	700	nA
	BZV55-B/C9V1	V_R = 6 V	-	-	500	nA
	BZV55-B/C10	V_R = 7 V	-	-	200	nA
	BZV55-B/C11	V_R = 8 V	-	-	100	nA
	BZV55-B/C12	V_R = 8 V	-	-	100	nA
	BZV55-B/C13	V_R = 8 V	-	-	100	nA
	BZV55-B/C15 to BZV55-B/C75	$V_R = 0.7V_{Z(nom)}$	-	-	50	nA

All information provided in this document is subject to legal disclaimers.

© NXP B.V. 2011. All rights reserved.

Table 8. Characteristics per type; BZV55-B2V4 to BZV55-C24

T_j = 25 °C unless otherwise specified.

BZV55-xxx	Sel	Working voltage V_Z (V)		Differential resistance r_{dif} (Ω)				Temperature coefficient S_Z (mV/K)			Diode capacitance C_d (pF)[1]	Non-repetitive peak reverse current I_{ZSM} (A)[2]
		I_Z = 5 mA		I_Z = 1 mA		I_Z = 5 mA		I_Z = 5 mA				
		Min	Max	Typ	Max	Typ	Max	Min	Typ	Max	Max	Max
2V4	B	2.35	2.45	275	600	70	100	−3.5	−1.6	0	450	6.0
	C	2.2	2.6									
2V7	B	2.65	2.75	300	600	75	100	−3.5	−2.0	0	450	6.0
	C	2.5	2.9									
3V0	B	2.94	3.06	325	600	80	95	−3.5	−2.1	0	450	6.0
	C	2.8	3.2									
3V3	B	3.23	3.37	350	600	85	95	−3.5	−2.4	0	450	6.0
	C	3.1	3.5									
3V6	B	3.53	3.67	375	600	85	90	−3.5	−2.4	0	450	6.0
	C	3.4	3.8									
3V9	B	3.82	3.98	400	600	85	90	−3.5	−2.5	0	450	6.0
	C	3.7	4.1									
4V3	B	4.21	4.39	410	600	80	90	−3.5	−2.5	0	450	6.0
	C	4.0	4.6									
4V7	B	4.61	4.79	425	500	50	80	−3.5	−1.4	0.2	300	6.0
	C	4.4	5.0									
5V1	B	5.0	5.2	400	480	40	60	−2.7	−0.8	1.2	300	6.0
	C	4.8	5.4									
5V6	B	5.49	5.71	80	400	15	40	−2.0	1.2	2.5	300	6.0
	C	5.2	6.0									
6V2	B	6.08	6.32	40	150	6	10	0.4	2.3	3.7	200	6.0
	C	5.8	6.6									
6V8	B	6.66	6.94	30	80	6	15	1.2	3.0	4.5	200	6.0
	C	6.4	7.2									
7V5	B	7.35	7.65	30	80	6	15	2.5	4.0	5.3	150	4.0
	C	7.0	7.9									
8V2	B	8.04	8.36	40	80	6	15	3.2	4.6	6.2	150	4.0
	C	7.7	8.7									
9V1	B	8.92	9.28	40	100	6	15	3.8	5.5	7.0	150	3.0
	C	8.5	9.6									
10	B	9.8	10.2	50	150	8	20	4.5	6.4	8.0	90	3.0
	C	9.4	10.6									
11	B	10.8	11.2	50	150	10	20	5.4	7.4	9.0	85	2.5
	C	10.4	11.6									
12	B	11.8	12.2	50	150	10	25	6.0	8.4	10.0	85	2.5
	C	11.4	12.7									

All information provided in this document is subject to legal disclaimers.

© NXP B.V. 2011. All rights reserved.

Table 8. Characteristics per type; BZV55-B2V4 to BZV55-C24 *...continued*

T_j = 25 °C unless otherwise specified.

BZV55-xxx	Sel	Working voltage V_Z (V)		Differential resistance r_{dif} (Ω)				Temperature coefficient S_Z (mV/K)			Diode capacitance C_d (pF)[1]	Non-repetitive peak reverse current I_{ZSM} (A)[2]
		I_Z = 5 mA		I_Z = 1 mA		I_Z = 5 mA		I_Z = 5 mA				
		Min	Max	Typ	Max	Typ	Max	Min	Typ	Max	Max	Max
13	B	12.7	13.3	50	170	10	30	7.0	9.4	11.0	80	2.5
	C	12.4	14.1									
15	B	14.7	15.3	50	200	10	30	9.2	11.4	13.0	75	2.0
	C	13.8	15.6									
16	B	15.7	16.3	50	200	10	40	10.4	12.4	14.0	75	1.5
	C	15.3	17.1									
18	B	17.6	18.4	50	225	10	45	12.4	14.4	16.0	70	1.5
	C	16.8	19.1									
20	B	19.6	20.4	60	225	15	55	12.3	15.6	18.0	60	1.5
	C	18.8	21.2									
22	B	21.6	22.4	60	250	20	55	14.1	17.6	20.0	60	1.25
	C	20.8	23.3									
24	B	23.5	24.5	60	250	25	70	15.9	19.6	22.0	55	1.25
	C	22.8	25.6									

[1] f = 1 MHz; V_R = 0 V

[2] t_p = 100 μs; square wave; T_j = 25 °C prior to surge

All information provided in this document is subject to legal disclaimers.

© NXP B.V. 2011. All rights reserved.

Table 9. Characteristics per type; BZV55-B27 to BZV55-C75

T_j = 25 °C unless otherwise specified.

BZV55-xxx	Sel	Working voltage V_Z (V)		Differential resistance r_{dif} (Ω)				Temperature coefficient S_Z (mV/K)			Diode capacitance C_d (pF)[1]	Non-repetitive peak reverse current I_{ZSM} (A)[2]
		I_Z = 2 mA		I_Z = 0.5 mA		I_Z = 2 mA		I_Z = 2 mA				
		Min	Max	Typ	Max	Typ	Max	Min	Typ	Max	Max	Max
27	B	26.5	27.5	65	300	25	80	18.0	22.7	25.3	50	1.0
	C	25.1	28.9									
30	B	29.4	30.6	70	300	30	80	20.6	25.7	29.4	50	1.0
	C	28.0	32.0									
33	B	32.3	33.7	75	325	35	80	23.3	28.7	33.4	45	0.9
	C	31.0	35.0									
36	B	35.3	36.7	80	350	35	90	26.0	31.8	37.4	45	0.8
	C	34.0	38.0									
39	B	38.2	39.8	80	350	40	130	28.7	34.8	41.2	45	0.7
	C	37.0	41.0									
43	B	42.1	43.9	85	375	45	150	31.4	38.8	46.6	40	0.6
	C	40.0	46.0									
47	B	46.1	47.9	85	375	50	170	35.0	42.9	51.8	40	0.5
	C	44.0	50.0									
51	B	50.0	52.0	90	400	60	180	38.6	46.9	57.2	40	0.4
	C	48.0	54.0									
56	B	54.9	57.1	100	425	70	200	42.2	52.0	63.8	40	0.3
	C	52.0	60.0									
62	B	60.8	63.2	120	450	80	215	58.8	64.4	71.6	35	0.3
	C	58.0	66.0									
68	B	66.6	69.4	150	475	90	240	65.6	71.7	79.8	35	0.25
	C	64.0	72.0									
75	B	73.5	76.5	170	500	95	255	73.4	80.2	88.6	35	0.2
	C	70.0	79.0									

[1] f = 1 MHz; V_R = 0 V

[2] t_p = 100 μs; square wave; T_j = 25 °C prior to surge

All information provided in this document is subject to legal disclaimers.

© NXP B.V. 2011. All rights reserved.

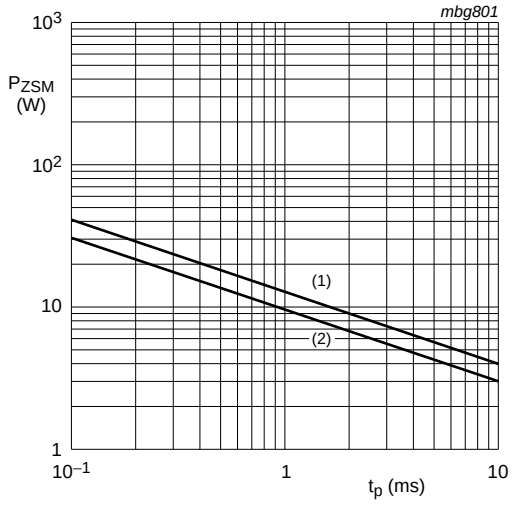

(1) T_j = 25 °C (prior to surge)

(2) T_j = 150 °C (prior to surge)

Fig 2. Non-repetitive peak reverse power dissipation as a function of pulse duration; maximum values

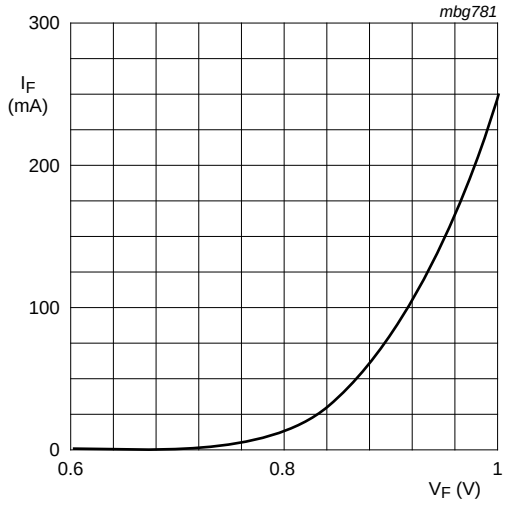

T_j = 25 °C

Fig 3. Forward current as a function of forward voltage; typical values

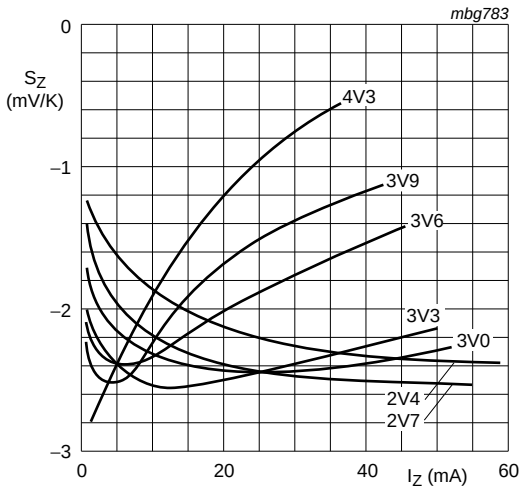

BZV55-B/C2V4 to BZV55-B/C4V3

T_j = 25 °C to 150 °C

Fig 4. Temperature coefficient as a function of working current; typical values

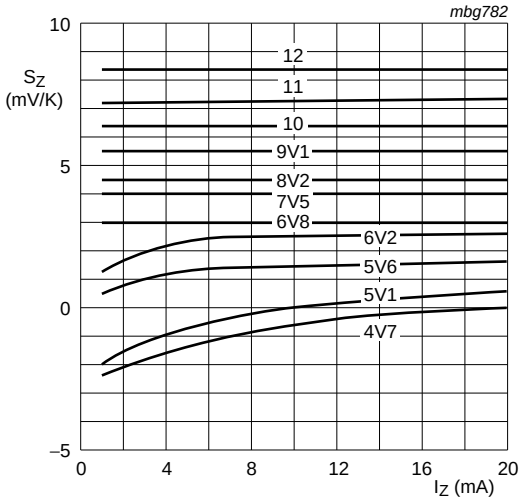

BZV55-B/C4V7 to BZV55-B/C12

T_j = 25 °C to 150 °C

Fig 5. Temperature coefficient as a function of working current; typical values

All information provided in this document is subject to legal disclaimers.

© NXP B.V. 2011. All rights reserved.

8. Package outline

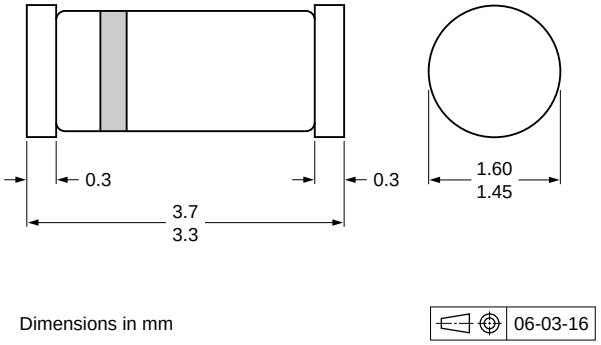

Fig 6. Package outline SOD80C

9. Packing information

Table 10. Packing methods

The indicated -xxx are the last three digits of the 12NC ordering code.[1]

Type number	Package	Description	Packing quantity	
			2500	10000
BZV55-B2V4 to BZV55-C75	SOD80C	4 mm pitch, 8 mm tape and reel	-115	-135

[1] For further information and the availability of packing methods, see Section 13.

All information provided in this document is subject to legal disclaimers.

© NXP B.V. 2011. All rights reserved.

10. Soldering

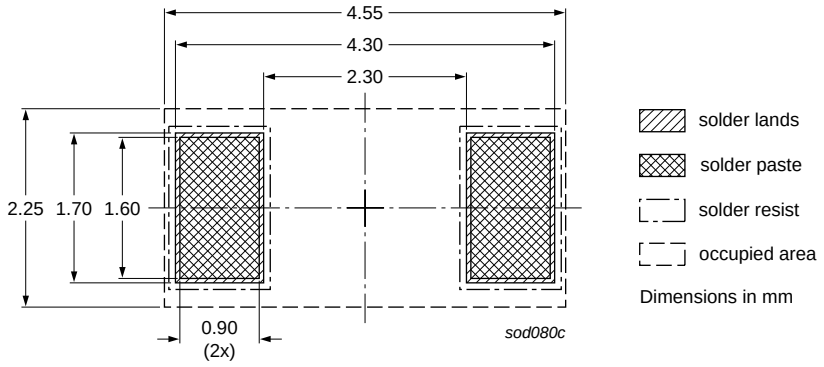

Fig 7. Reflow soldering footprint SOD80C

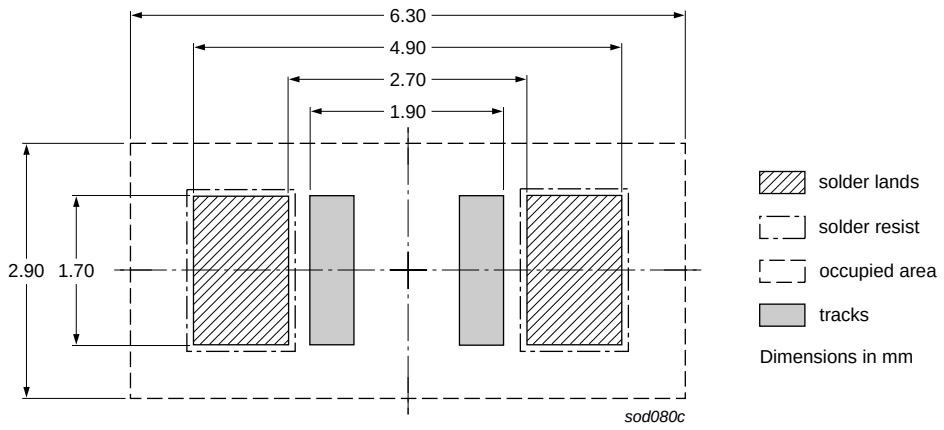

Fig 8. Wave soldering footprint SOD80C

All information provided in this document is subject to legal disclaimers.

© NXP B.V. 2011. All rights reserved.

11. Revision history

Table 11. Revision history

Document ID	Release date	Data sheet status	Change notice	Supersedes
BZV55_SER v.5	20110126	Product data sheet	-	BZV55_SER v.4
Modifications:	• Section 4 “Marking”: updated • Table 6 “Thermal characteristics”: changed $R_{th(j-t)}$ for $R_{th(j-sp)}$ • Figure 6: superseded by minimized outline drawing • Section 12 “Legal information”: updated			
BZV55_SER v.4	20070719	Product data sheet	CPCN200508022F	BZV55 v.3
BZV55 v.3	20020228	Product specification	-	BZV55 v.2
BZV55 v.2	19990521	Product specification	-	BZV55 v.1
BZV55 v.1	19960426	Product specification	-	-

All information provided in this document is subject to legal disclaimers.

© NXP B.V. 2011. All rights reserved.

12. Legal information

12.1 Data sheet status

Document status[1][2]	Product status[3]	Definition
Objective [short] data sheet	Development	This document contains data from the objective specification for product development.
Preliminary [short] data sheet	Qualification	This document contains data from the preliminary specification.
Product [short] data sheet	Production	This document contains the product specification.

[1] Please consult the most recently issued document before initiating or completing a design.

[2] The term 'short data sheet' is explained in section "Definitions".

[3] The product status of device(s) described in this document may have changed since this document was published and may differ in case of multiple devices. The latest product status information is available on the Internet at URL http://www.nxp.com.

12.2 Definitions

Draft — The document is a draft version only. The content is still under internal review and subject to formal approval, which may result in modifications or additions. NXP Semiconductors does not give any representations or warranties as to the accuracy or completeness of information included herein and shall have no liability for the consequences of use of such information.

Short data sheet — A short data sheet is an extract from a full data sheet with the same product type number(s) and title. A short data sheet is intended for quick reference only and should not be relied upon to contain detailed and full information. For detailed and full information see the relevant full data sheet, which is available on request via the local NXP Semiconductors sales office. In case of any inconsistency or conflict with the short data sheet, the full data sheet shall prevail.

Product specification — The information and data provided in a Product data sheet shall define the specification of the product as agreed between NXP Semiconductors and its customer, unless NXP Semiconductors and customer have explicitly agreed otherwise in writing. In no event however, shall an agreement be valid in which the NXP Semiconductors product is deemed to offer functions and qualities beyond those described in the Product data sheet.

12.3 Disclaimers

Limited warranty and liability — Information in this document is believed to be accurate and reliable. However, NXP Semiconductors does not give any representations or warranties, expressed or implied, as to the accuracy or completeness of such information and shall have no liability for the consequences of use of such information.

In no event shall NXP Semiconductors be liable for any indirect, incidental, punitive, special or consequential damages (including - without limitation - lost profits, lost savings, business interruption, costs related to the removal or replacement of any products or rework charges) whether or not such damages are based on tort (including negligence), warranty, breach of contract or any other legal theory.

Notwithstanding any damages that customer might incur for any reason whatsoever, NXP Semiconductors' aggregate and cumulative liability towards customer for the products described herein shall be limited in accordance with the *Terms and conditions of commercial sale* of NXP Semiconductors.

Right to make changes — NXP Semiconductors reserves the right to make changes to information published in this document, including without limitation specifications and product descriptions, at any time and without notice. This document supersedes and replaces all information supplied prior to the publication hereof.

Suitability for use — NXP Semiconductors products are not designed, authorized or warranted to be suitable for use in life support, life-critical or safety-critical systems or equipment, nor in applications where failure or malfunction of an NXP Semiconductors product can reasonably be expected to result in personal injury, death or severe property or environmental damage. NXP Semiconductors accepts no liability for inclusion and/or use of NXP Semiconductors products in such equipment or applications and therefore such inclusion and/or use is at the customer's own risk.

Applications — Applications that are described herein for any of these products are for illustrative purposes only. NXP Semiconductors makes no representation or warranty that such applications will be suitable for the specified use without further testing or modification.

Customers are responsible for the design and operation of their applications and products using NXP Semiconductors products, and NXP Semiconductors accepts no liability for any assistance with applications or customer product design. It is customer's sole responsibility to determine whether the NXP Semiconductors product is suitable and fit for the customer's applications and products planned, as well as for the planned application and use of customer's third party customer(s). Customers should provide appropriate design and operating safeguards to minimize the risks associated with their applications and products.

NXP Semiconductors does not accept any liability related to any default, damage, costs or problem which is based on any weakness or default in the customer's applications or products, or the application or use by customer's third party customer(s). Customer is responsible for doing all necessary testing for the customer's applications and products using NXP Semiconductors products in order to avoid a default of the applications and the products or of the application or use by customer's third party customer(s). NXP does not accept any liability in this respect.

Limiting values — Stress above one or more limiting values (as defined in the Absolute Maximum Ratings System of IEC 60134) will cause permanent damage to the device. Limiting values are stress ratings only and (proper) operation of the device at these or any other conditions above those given in the Recommended operating conditions section (if present) or the Characteristics sections of this document is not warranted. Constant or repeated exposure to limiting values will permanently and irreversibly affect the quality and reliability of the device.

Terms and conditions of commercial sale — NXP Semiconductors products are sold subject to the general terms and conditions of commercial sale, as published at http://www.nxp.com/profile/terms, unless otherwise agreed in a valid written individual agreement. In case an individual agreement is concluded only the terms and conditions of the respective agreement shall apply. NXP Semiconductors hereby expressly objects to applying the customer's general terms and conditions with regard to the purchase of NXP Semiconductors products by customer.

No offer to sell or license — Nothing in this document may be interpreted or construed as an offer to sell products that is open for acceptance or the grant, conveyance or implication of any license under any copyrights, patents or other industrial or intellectual property rights.

Export control — This document as well as the item(s) described herein may be subject to export control regulations. Export might require a prior authorization from national authorities.

All information provided in this document is subject to legal disclaimers.

© NXP B.V. 2011. All rights reserved.

Quick reference data — The Quick reference data is an extract of the product data given in the Limiting values and Characteristics sections of this document, and as such is not complete, exhaustive or legally binding.

Non-automotive qualified products — Unless this data sheet expressly states that this specific NXP Semiconductors product is automotive qualified, the product is not suitable for automotive use. It is neither qualified nor tested in accordance with automotive testing or application requirements. NXP Semiconductors accepts no liability for inclusion and/or use of non-automotive qualified products in automotive equipment or applications.

In the event that customer uses the product for design-in and use in automotive applications to automotive specifications and standards, customer (a) shall use the product without NXP Semiconductors' warranty of the product for such automotive applications, use and specifications, and (b) whenever customer uses the product for automotive applications beyond NXP Semiconductors' specifications such use shall be solely at customer's own risk, and (c) customer fully indemnifies NXP Semiconductors for any liability, damages or failed product claims resulting from customer design and use of the product for automotive applications beyond NXP Semiconductors' standard warranty and NXP Semiconductors' product specifications.

12.4 Trademarks

Notice: All referenced brands, product names, service names and trademarks are the property of their respective owners.

13. Contact information

For more information, please visit: **http://www.nxp.com**

For sales office addresses, please send an email to: **salesaddresses@nxp.com**

All information provided in this document is subject to legal disclaimers.

© NXP B.V. 2011. All rights reserved.

14. Contents

1 Product profile 1
1.1 General description 1
1.2 Features and benefits 1
1.3 Applications 1
1.4 Quick reference data 1
2 Pinning information 1
3 Ordering information 2
4 Marking 2
5 Limiting values 2
6 Thermal characteristics 2
7 Characteristics 3
8 Package outline 8
9 Packing information 8
10 Soldering 9
11 Revision history 10
12 Legal information 11
12.1 Data sheet status 11
12.2 Definitions 11
12.3 Disclaimers 11
12.4 Trademarks 12
13 Contact information 12
14 Contents 13

Please be aware that important notices concerning this document and the product(s) described herein, have been included in section 'Legal information'.

© NXP B.V. 2011. All rights reserved.

For more information, please visit: http://www.nxp.com
For sales office addresses, please send an email to: salesaddresses@nxp.com

Date of release: 26 January 2011
Document identifier: BZV55_SER

Общество с ограниченной ответственностью «МосЧип» ИНН 7719860671 / КПП 771901001
Адрес: 105318, г.Москва, ул.Щербаковская д.3, офис 1107

Данный компонент на территории Российской Федерации

Вы можете приобрести в компании MosChip.

Для оперативного оформления запроса Вам необходимо перейти по данной ссылке:

http://moschip.ru/get-element

Вы можете разместить у нас заказ для любого Вашего проекта, будь то серийное производство или разработка единичного прибора.

В нашем ассортименте представлены ведущие мировые производители активных и пассивных электронных компонентов.

Нашей специализацией является поставка электронной компонентной базы двойного назначения, продукции таких производителей как XILINX, Intel (ex.ALTERA), Vicor, Microchip, Texas Instruments, Analog Devices, Mini-Circuits, Amphenol, Glenair.

Сотрудничество с глобальными дистрибьюторами электронных компонентов, предоставляет возможность заказывать и получать с международных складов практически любой перечень компонентов в оптимальные для Вас сроки.

На всех этапах разработки и производства наши партнеры могут получить квалифицированную поддержку опытных инженеров.

Система менеджмента качества компании отвечает требованиям в соответствии с ГОСТ Р ИСО 9001, ГОСТ РВ 0015-002 и ЭС РД 009

Офис по работе с юридическими лицами:

105318, г.Москва, ул.Щербаковская д.3, офис 1107, 1118, ДЦ «Щербаковский»

Телефон: +7 495 668-12-70 (многоканальный)

Факс: +7 495 668-12-70 (доб.304)

E-mail: info@moschip.ru

Skype отдела продаж:
moschip.ru
moschip.ru_4
moschip.ru_6
moschip.ru_9