L78xx, L78xxC, L78xxAB, L78xxAC

Positive voltage regulator ICs

Datasheet - production data

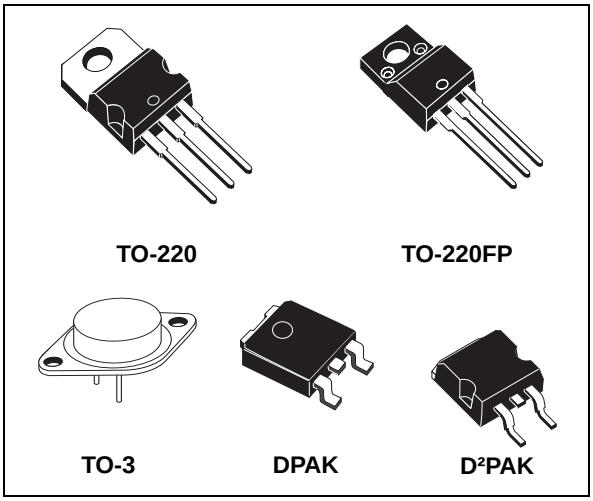

Features

- Output current up to 1.5 A
- Output voltages of 5; 6; 8; 8.5; 9; 12; 15; 18; 24 V
- Thermal overload protection
- Short circuit protection
- Output transition SOA protection
- 2 % output voltage tolerance (A version)
- Guaranteed in extended temperature range (A version)

Description

The L78xx series of three-terminal positive regulators is available in TO-220, TO-220FP, TO-3, D²PAK and DPAK packages and several fixed output voltages, making it useful in a wide range of applications.

These regulators can provide local on-card regulation, eliminating the distribution problems associated with single point regulation. Each type employs internal current limiting, thermal shut-down and safe area protection, making it essentially indestructible. If adequate heat sinking is provided, they can deliver over 1 A output current. Although designed primarily as fixed voltage regulators, these devices can be used with external components to obtain adjustable voltage and currents.

Table 1. Device summary

Part numbers			
L7805	L7806AC	L7809AB	L7815AB
L7805C	L7808C	L7809AC	L7815AC
L7805AB	L7808AB	L7812C	L7818C
L7805AC	L7808AC	L7812AB	L7824C
L7806C	L7885C	L7812AC	L7824AB
L7806AB	L7809C	L7815C	L7824AC

This is information on a product in full production. www.st.com

Contents

1 Diagram 5

2 Pin configuration 6

3 Maximum ratings 7

4 Test circuits 8

5 Electrical characteristics 9

6 Application information 28

6.1 Design consideration 28

7 Typical performance 37

8 Package mechanical data 39

9 Order codes 54

10 Revision history 56

List of tables

Table 1. Device summary . . . 1
Table 2. Absolute maximum ratings . . . 7
Table 3. Thermal data . . . 7
Table 4. Electrical characteristics of L7805 . . . 9
Table 5. Electrical characteristics of L7805A . . . 10
Table 6. Electrical characteristics of L7806A . . . 11
Table 7. Electrical characteristics of L7808A . . . 12
Table 8. Electrical characteristics of L7809A . . . 13
Table 9. Electrical characteristics of L7812A . . . 14
Table 10. Electrical characteristics of L7815A . . . 15
Table 11. Electrical characteristics of L7824A . . . 16
Table 12. Electrical characteristics of L7805C . . . 17
Table 13. Electrical characteristics of L7806C . . . 18
Table 14. Electrical characteristics of L7808C . . . 19
Table 15. Electrical characteristics of L7885C . . . 20
Table 16. Electrical characteristics of L7809C . . . 21
Table 17. Electrical characteristics of L7810C . . . 22
Table 18. Electrical characteristics of L7812C . . . 23
Table 19. Electrical characteristics of L7815C . . . 24
Table 20. Electrical characteristics of L7818C . . . 25
Table 21. Electrical characteristics of L7820C . . . 26
Table 22. Electrical characteristics of L7824C . . . 27
Table 23. TO-220 mechanical data . . . 39
Table 24. TO-220FP mechanical data . . . 44
Table 25. TO-3 mechanical data . . . 45
Table 26. DPAK mechanical data . . . 47
Table 27. Tape and reel DPAK mechanical data . . . 48
Table 28. D²PAK mechanical data . . . 51
Table 29. D²PAK footprint data . . . 52
Table 30. Tape and reel D²PAK mechanical data . . . 53
Table 31. Order codes . . . 54
Table 32. Document revision history . . . 56

List of figures

Figure 1. Block diagram . . . 5
Figure 2. Pin connections (top view) . . . 6
Figure 3. Schematic diagram . . . 6
Figure 4. Application circuits . . . 7
Figure 5. DC parameter . . . 8
Figure 6. Load regulation . . . 8
Figure 7. Ripple rejection . . . 8
Figure 8. Fixed output regulator . . . 28
Figure 9. Current regulator . . . 29
Figure 10. Circuit for increasing output voltage . . . 29
Figure 11. Adjustable output regulator (7 to 30 V) . . . 29
Figure 12. 0.5 to 10 V regulator . . . 30
Figure 13. High current voltage regulator . . . 30
Figure 14. High output current with short circuit protection . . . 30
Figure 15. Tracking voltage regulator . . . 31
Figure 16. Split power supply (± 15 V - 1 A) . . . 31
Figure 17. Negative output voltage circuit . . . 32
Figure 18. Switching regulator . . . 32
Figure 19. High input voltage circuit (configuration 1) . . . 32
Figure 20. High input voltage circuit (configuration 2) . . . 33
Figure 21. High output voltage regulator . . . 33
Figure 22. High input and output voltage . . . 33
Figure 23. Reducing power dissipation with dropping resistor . . . 34
Figure 24. Remote shutdown . . . 34
Figure 25. Power AM modulator (unity voltage gain, $I_O \leq 0.5$) . . . 34
Figure 26. Adjustable output voltage with temperature compensation . . . 35
Figure 27. Light controllers ($V_{O(min)} = V_{XX} + V_{BE}$) . . . 35
Figure 28. Protection against input short-circuit with high capacitance loads . . . 36
Figure 29. Dropout voltage vs. junction temperature . . . 37
Figure 30. Peak output current vs. input/output differential voltage . . . 37
Figure 31. Supply voltage rejection vs. frequency . . . 37
Figure 32. Output voltage vs. junction temperature . . . 37
Figure 33. Output impedance vs. frequency . . . 37
Figure 34. Quiescent current vs. junction temp. . . . 37
Figure 35. Load transient response . . . 38
Figure 36. Line transient response . . . 38
Figure 37. Quiescent current vs. input voltage . . . 38
Figure 38. Drawing dimension TO-220 (type STD-ST Dual Gauge) . . . 40
Figure 39. Drawing dimension TO-220 (type STD-ST Single Gauge) . . . 41
Figure 40. Drawing dimension tube for TO-220 Dual Gauge (mm.) . . . 42
Figure 41. Drawing dimension tube for TO-220 Single Gauge (mm.) . . . 42
Figure 42. Drawing dimension TO-220FP . . . 43
Figure 43. Drawing dimension TO-3 . . . 45
Figure 44. Drawing dimension DPAK . . . 46
Figure 45. Drawing dimension tape and reel for DPAK . . . 48
Figure 46. Drawing dimension D²PAK (type STD-ST) . . . 49
Figure 47. Drawing dimension D²PAK (type WOOSEOK-Subcon.) . . . 50
Figure 48. D²PAK footprint recommended data . . . 52
Figure 49. Drawing dimension tape and reel for D²PAK . . . 53

1 Diagram

Figure 1. Block diagram

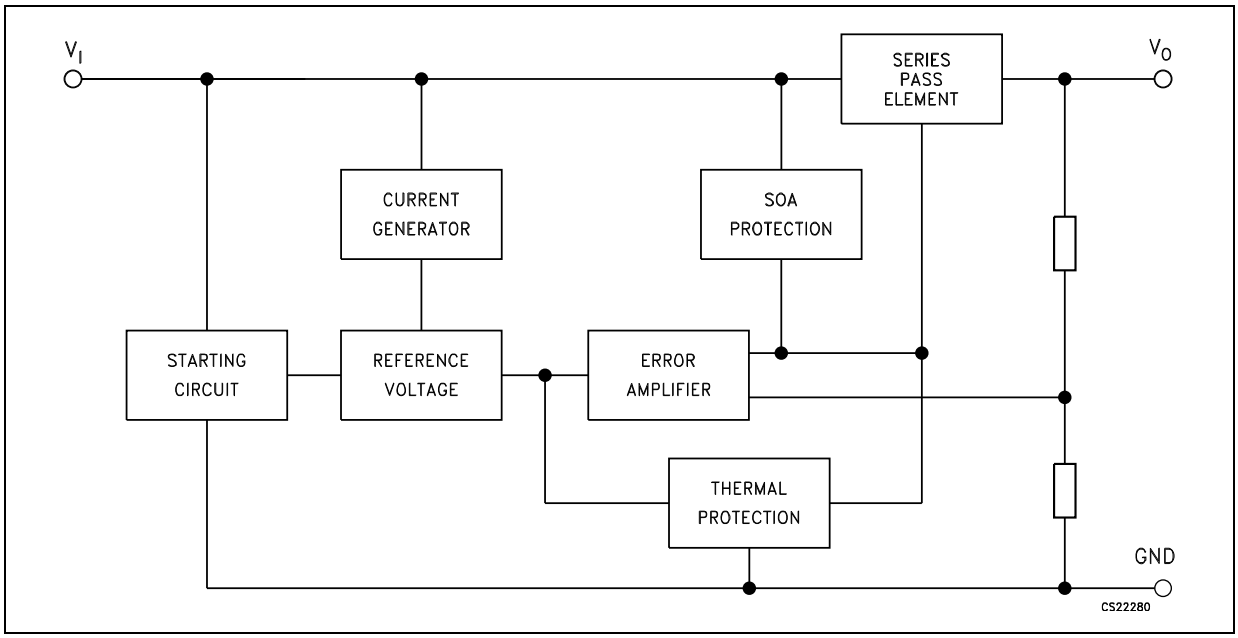

2 Pin configuration

Figure 2. Pin connections (top view)

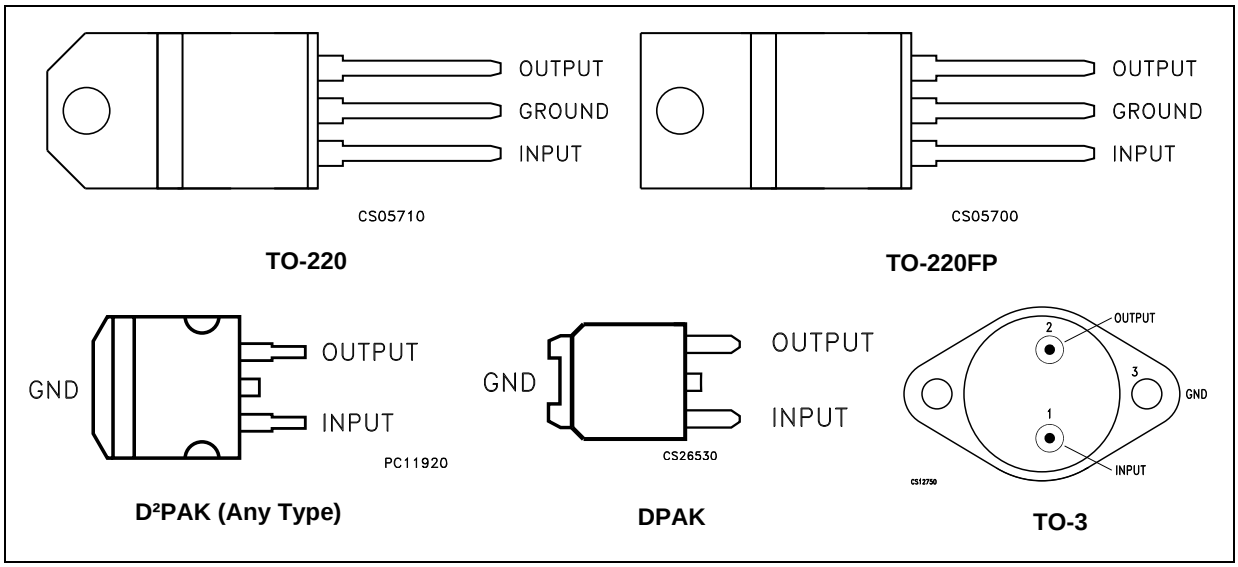

Figure 3. Schematic diagram

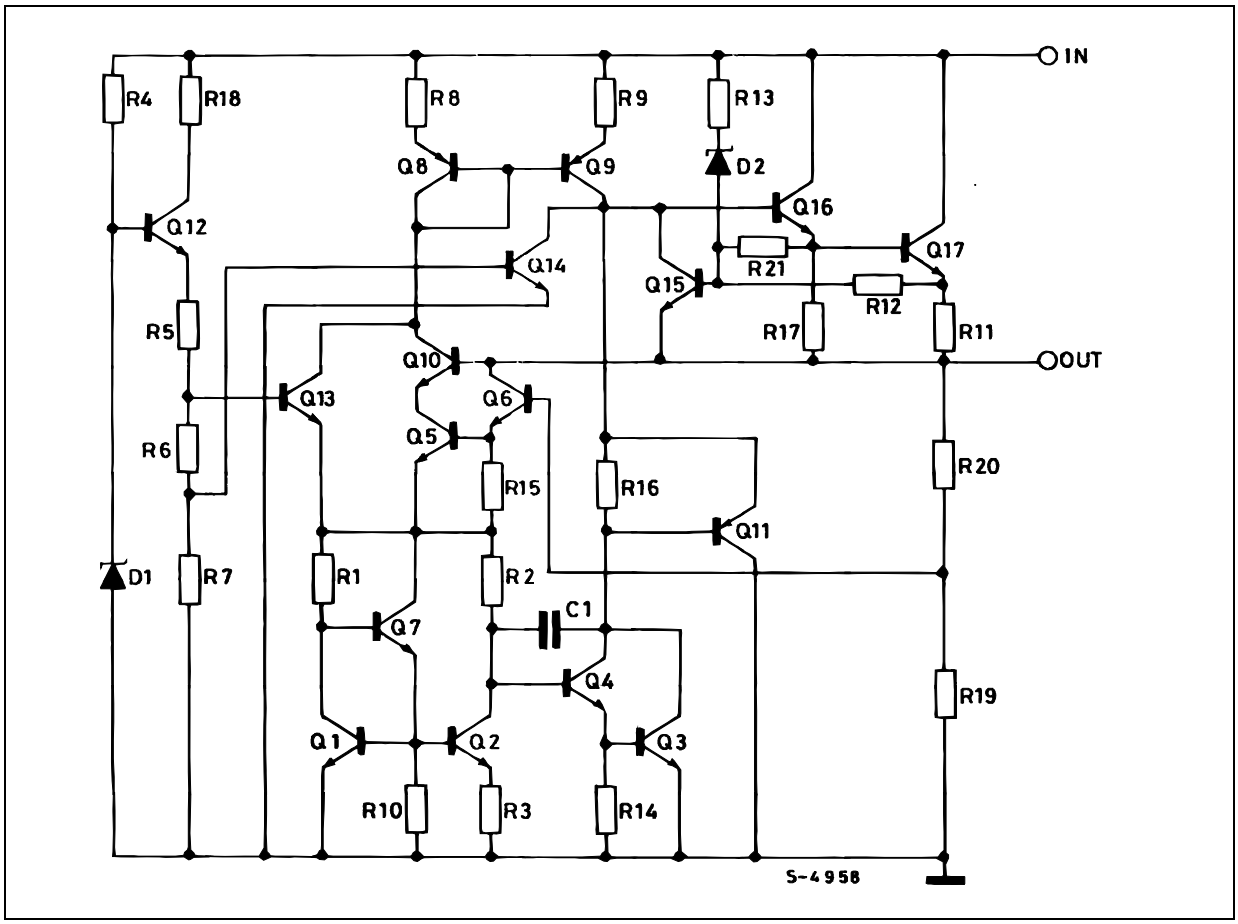

3 Maximum ratings

Table 2. Absolute maximum ratings

Symbol	Parameter		Value	Unit
V_I	DC input voltage	for V_O= 5 to 18 V	35	V
		for V_O= 20, 24 V	40	
I_O	Output current		Internally limited	
P_D	Power dissipation		Internally limited	
T_{STG}	Storage temperature range		-65 to 150	°C
T_{OP}	Operating junction temperature range	for L78xx	-55 to 150	°C
		for L78xxC, L78xxAC	0 to 125	
		for L78xxAB	-40 to 125	

Note: Absolute maximum ratings are those values beyond which damage to the device may occur. Functional operation under these condition is not implied.

Table 3. Thermal data

Symbol	Parameter	D²PAK	DPAK	TO-220	TO-220FP	TO-3	Unit
R_{thJC}	Thermal resistance junction-case	3	8	5	5	4	°C/W
R_{thJA}	Thermal resistance junction-ambient	62.5	100	50	60	35	°C/W

Figure 4. Application circuits

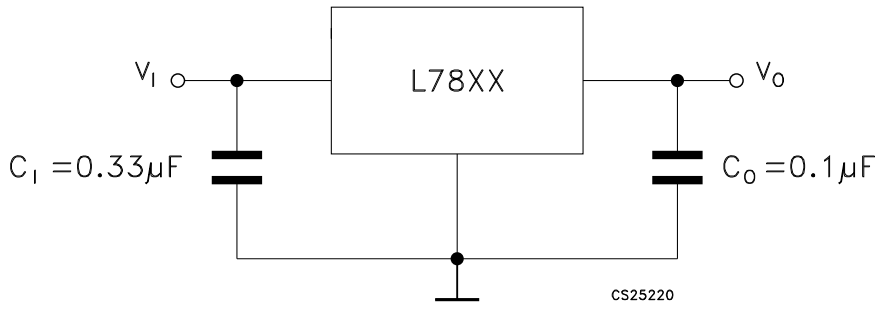

4 Test circuits

Figure 5. DC parameter

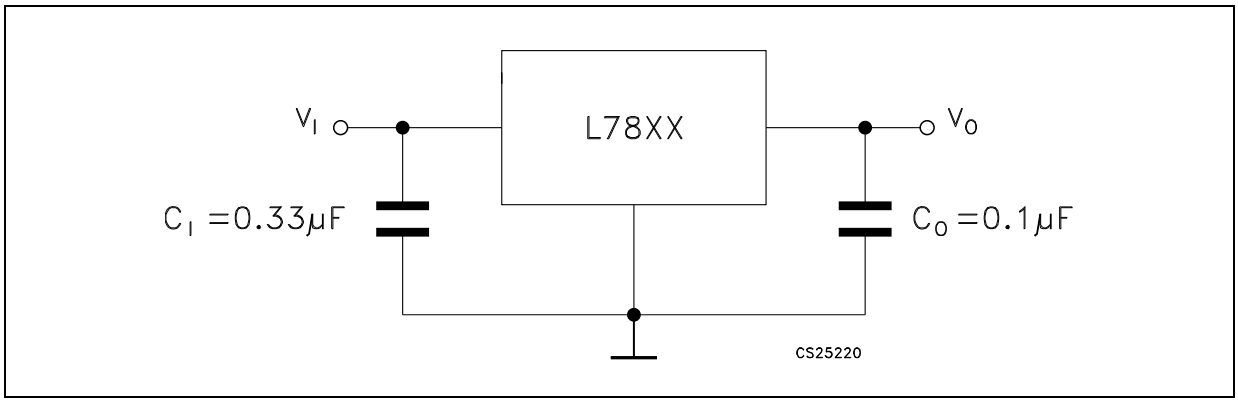

Figure 6. Load regulation

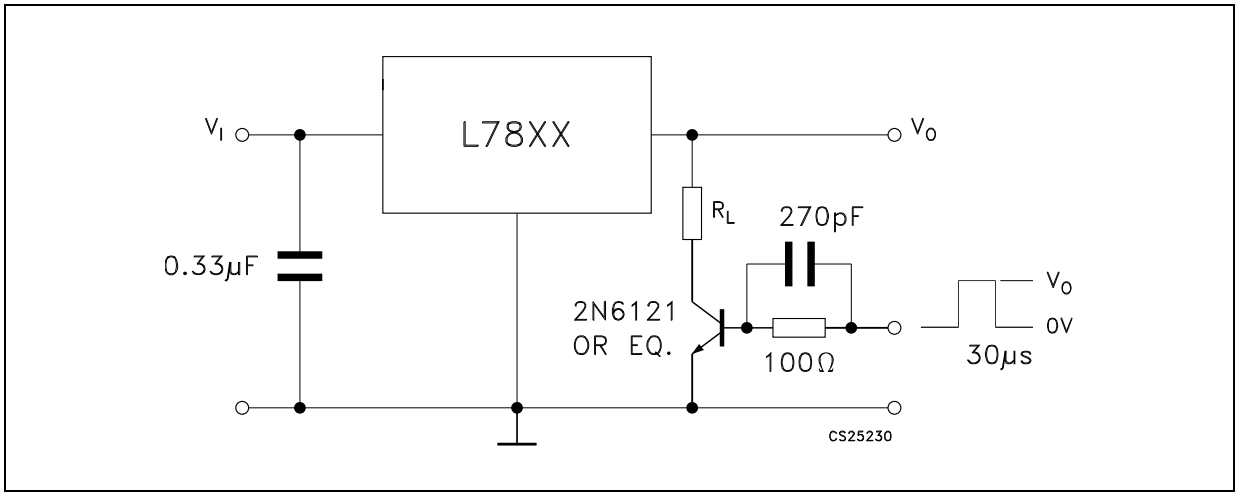

Figure 7. Ripple rejection

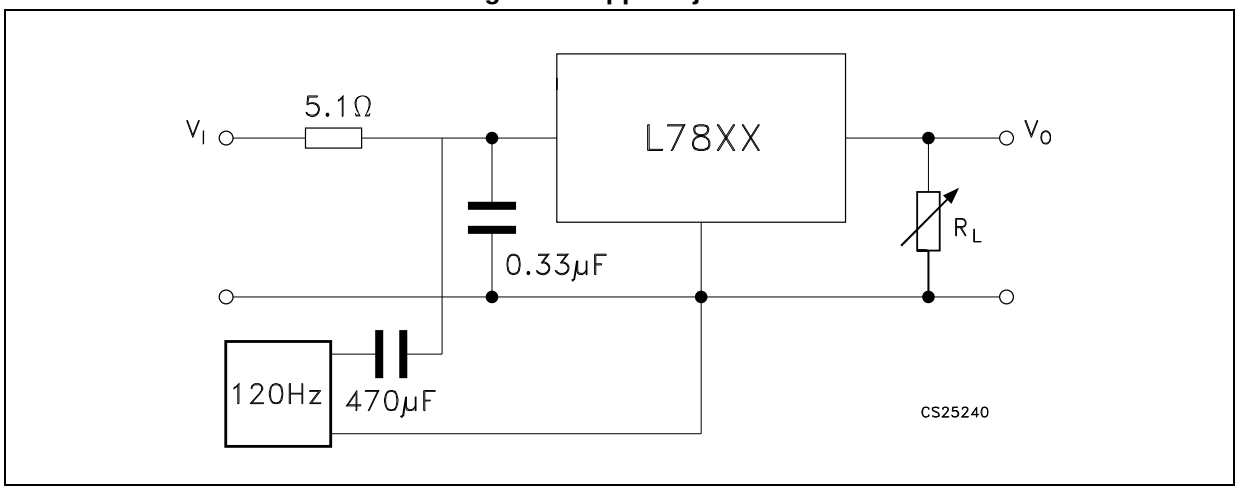

5 Electrical characteristics

Refer to the test circuits, T_J = -55 to 150 °C, V_I = 10 V, I_O = 500 mA, C_I = 0.33 µF, C_O = 0.1 µF unless otherwise specified.

Table 4. Electrical characteristics of L7805

Symbol	Parameter	Test conditions	Min.	Typ.	Max.	Unit
V_O	Output voltage	T_J = 25°C	4.8	5	5.2	V
V_O	Output voltage	I_O = 5 mA to 1 A, V_I = 8 to 20 V	4.65	5	5.35	V
ΔV_O(1)	Line regulation	V_I = 7 to 25 V, T_J = 25°C		3	50	mV
		V_I = 8 to 12 V, T_J = 25°C		1	25	
ΔV_O(1)	Load regulation	I_O = 5 mA to 1.5 A, T_J = 25°C			100	mV
		I_O = 250 to 750 mA, T_J = 25°C			25	
I_d	Quiescent current	T_J = 25°C			6	mA
ΔI_d	Quiescent current change	I_O = 5 mA to 1 A			0.5	mA
		V_I = 8 to 25 V			0.8	
$\Delta V_O/\Delta T$	Output voltage drift	I_O = 5 mA		0.6		mV/°C
eN	Output noise voltage	B =10 Hz to 100 kHz, T_J = 25°C			40	µV/V_O
SVR	Supply voltage rejection	V_I = 8 to 18 V, f = 120 Hz	68			dB
V_d	Dropout voltage	I_O = 1 A, T_J = 25°C		2	2.5	V
R_O	Output resistance	f = 1 kHz		17		mΩ
I_{sc}	Short circuit current	V_I = 35 V, T_J = 25°C		0.75	1.2	A
I_{scp}	Short circuit peak current	T_J = 25°C	1.3	2.2	3.3	A

1. Load and line regulation are specified at constant junction temperature. Changes in V_O due to heating effects must be taken into account separately. Pulse testing with low duty cycle is used.

V_I = 10 V, I_O = 1 A, T_J = 0 to 125 °C (L7805AC), T_J = -40 to 125 °C (L7805AB), unless otherwise specified.

Table 5. Electrical characteristics of L7805A

Symbol	Parameter	Test conditions	Min.	Typ.	Max.	Unit
V_O	Output voltage	T_J = 25°C	4.9	5	5.1	V
V_O	Output voltage	I_O = 5 mA to 1 A, V_I = 7.5 to 18 V	4.8	5	5.2	V
V_O	Output voltage	I_O = 1 A, V_I = 18 to 20 V, T_J = 25°C	4.8	5	5.2	V
ΔV_O (1)	Line regulation	V_I = 7.5 to 25 V, I_O = 500 mA, T_J = 25°C		7	50	mV
		V_I = 8 to 12 V		10	50	mV
		V_I = 8 to 12 V, T_J = 25°C		2	25	mV
		V_I = 7.3 to 20 V, T_J = 25°C		7	50	mV
ΔV_O (1)	Load regulation	I_O = 5 mA to 1 A		25	100	mV
		I_O = 5 mA to 1.5 A, T_J = 25°C		30	100	
		I_O = 250 to 750 mA		8	50	
I_q	Quiescent current	T_J = 25°C		4.3	6	mA
					6	mA
ΔI_q	Quiescent current change	V_I = 8 to 23 V, I_O = 500 mA			0.8	mA
		V_I = 7.5 to 20 V, T_J = 25°C			0.8	mA
		I_O = 5 mA to 1 A			0.5	mA
SVR	Supply voltage rejection	V_I = 8 to 18 V, f = 120 Hz, I_O = 500 mA		68		dB
V_d	Dropout voltage	I_O = 1 A, T_J = 25°C		2		V
eN	Output noise voltage	T_A = 25°C, B =10 Hz to 100 kHz		10		$\mu V/V_O$
R_O	Output resistance	f = 1 kHz		17		mΩ
I_{sc}	Short circuit current	V_I = 35 V, T_A = 25°C		0.2		A
I_{scp}	Short circuit peak current	T_J = 25°C		2.2		A
$\Delta V_O/\Delta T$	Output voltage drift			-1.1		mV/°C

1. Load and line regulation are specified at constant junction temperature. Changes in V_O due to heating effects must be taken into account separately. Pulse testing with low duty cycle is used.

V_I = 11 V, I_O = 1 A, T_J = 0 to 125 °C (L7806AC), T_J = -40 to 125 °C (L7806AB), unless otherwise specified.

Table 6. Electrical characteristics of L7806A

Symbol	Parameter	Test conditions	Min.	Typ.	Max.	Unit
V_O	Output voltage	T_J = 25°C	5.88	6	6.12	V
V_O	Output voltage	I_O = 5 mA to 1 A, V_I = 8.6 to 19 V	5.76	6	6.24	V
V_O	Output voltage	I_O = 1 A, V_I = 19 to 21 V, T_J = 25°C	5.76	6	6.24	V
ΔV_O (1)	Line regulation	V_I = 8.6 to 25 V, I_O = 500 mA, T_J = 25°C		9	60	mV
		V_I = 9 to 13 V		11	60	mV
		V_I = 9 to 13 V, T_J = 25°C		3	30	mV
		V_I = 8.3 to 21 V, T_J = 25°C		9	60	mV
ΔV_O (1)	Load regulation	I_O = 5 mA to 1 A		25	100	mV
		I_O = 5 mA to 1.5 A, T_J = 25°C		30	100	
		I_O = 250 to 750 mA		10	50	
I_q	Quiescent current	T_J = 25°C		4.3	6	mA
					6	mA
ΔI_q	Quiescent current change	V_I = 9 to 24 V, I_O = 500 mA			0.8	mA
		V_I = 8.6 to 21 V, T_J = 25°C			0.8	mA
		I_O = 5 mA to 1 A			0.5	mA
SVR	Supply voltage rejection	V_I = 9 to 19 V, f = 120 Hz, I_O = 500 mA		65		dB
V_d	Dropout voltage	I_O = 1 A, T_J = 25°C		2		V
eN	Output noise voltage	T_A = 25°C, B =10 Hz to 100 kHz		10		µV/V_O
R_O	Output resistance	f = 1 kHz		17		mΩ
I_{sc}	Short circuit current	V_I = 35 V, T_A = 25°C		0.2		A
I_{scp}	Short circuit peak current	T_J = 25°C		2.2		A
$\Delta V_O/\Delta T$	Output voltage drift			-0.8		mV/°C

1. Load and line regulation are specified at constant junction temperature. Changes in V_O due to heating effects must be taken into account separately. Pulse testing with low duty cycle is used.

V_I = 14 V, I_O = 1 A, T_J = 0 to 125 °C (L7808AC), T_J = -40 to 125 °C (L7808AB), unless otherwise specified.

Table 7. Electrical characteristics of L7808A

Symbol	Parameter	Test conditions	Min.	Typ.	Max.	Unit
V_O	Output voltage	T_J = 25°C	7.84	8	8.16	V
V_O	Output voltage	I_O = 5 mA to 1 A, V_I = 10.6 to 21 V	7.7	8	8.3	V
V_O	Output voltage	I_O = 1 A, V_I = 21 to 23 V, T_J = 25°C	7.7	8	8.3	V
ΔV_O (1)	Line regulation	V_I = 10.6 to 25 V, I_O = 500 mA, T_J = 25°C		12	80	mV
		V_I = 11 to 17 V		15	80	mV
		V_I = 11 to 17 V, T_J = 25°C		5	40	mV
		V_I = 10.4 to 23 V, T_J = 25°C		12	80	mV
ΔV_O (1)	Load regulation	I_O = 5 mA to 1 A		25	100	mV
		I_O = 5 mA to 1.5 A, T_J = 25°C		30	100	
		I_O = 250 to 750 mA		10	50	
I_q	Quiescent current	T_J = 25°C		4.3	6	mA
					6	mA
ΔI_q	Quiescent current change	V_I = 11 to 23 V, I_O = 500 mA			0.8	mA
		V_I = 10.6 to 23 V, T_J = 25°C			0.8	mA
		I_O = 5 mA to 1 A			0.5	mA
SVR	Supply voltage rejection	V_I = 11.5 to 21.5 V, f = 120 Hz, I_O = 500 mA		62		dB
V_d	Dropout voltage	I_O = 1 A, T_J = 25°C		2		V
eN	Output noise voltage	T_A = 25°C, B =10 Hz to 100 kHz		10		µV/V_O
R_O	Output resistance	f = 1 kHz		18		mΩ
I_{sc}	Short circuit current	V_I = 35 V, T_A = 25°C		0.2		A
I_{scp}	Short circuit peak current	T_J = 25°C		2.2		A
$\Delta V_O/\Delta T$	Output voltage drift			-0.8		mV/°C

1. Load and line regulation are specified at constant junction temperature. Changes in V_O due to heating effects must be taken into account separately. Pulse testing with low duty cycle is used.

V_I = 15 V, I_O = 1 A, T_J = 0 to 125 °C (L7809AC), T_J = -40 to 125 °C (L7809AB), unless otherwise specified.

Table 8. Electrical characteristics of L7809A

Symbol	Parameter	Test conditions	Min.	Typ.	Max.	Unit
V_O	Output voltage	T_J = 25°C	8.82	9	9.18	V
V_O	Output voltage	I_O = 5 mA to 1 A, V_I = 10.6 to 22 V	8.65	9	9.35	V
V_O	Output voltage	I_O = 1 A, V_I = 22 to 24 V, T_J = 25°C	8.65	9	9.35	V
ΔV_O (1)	Line regulation	V_I = 10.6 to 25 V, I_O = 500 mA, T_J = 25°C		12	90	mV
		V_I = 11 to 17 V		15	90	mV
		V_I = 11 to 17 V, T_J = 25°C		5	45	mV
		V_I = 11.4 to 23 V, T_J = 25°C		12	90	mV
ΔV_O (1)	Load regulation	I_O = 5 mA to 1 A		25	100	mV
		I_O = 5 mA to 1.5 A, T_J = 25°C		30	100	
		I_O = 250 to 750 mA		10	50	
I_q	Quiescent current	T_J = 25°C		4.3	6	mA
					6	mA
ΔI_q	Quiescent current change	V_I = 11 to 25 V, I_O = 500 mA			0.8	mA
		V_I = 10.6 to 23 V, T_J = 25°C			0.8	mA
		I_O = 5 mA to 1 A			0.5	mA
SVR	Supply voltage rejection	V_I = 11.5 to 21.5 V, f = 120 Hz, I_O = 500 mA		61		dB
V_d	Dropout voltage	I_O = 1 A, T_J = 25°C		2		V
eN	Output noise voltage	T_A = 25°C, B =10 Hz to 100 kHz		10		µV/V_O
R_O	Output resistance	f = 1 kHz		18		mΩ
I_{sc}	Short circuit current	V_I = 35 V, T_A = 25°C		0.2		A
I_{scp}	Short circuit peak current	T_J = 25°C		2.2		A
$\Delta V_O/\Delta T$	Output voltage drift			-0.8		mV/°C

1. Load and line regulation are specified at constant junction temperature. Changes in V_O due to heating effects must be taken into account separately. Pulse testing with low duty cycle is used.

V_I = 19 V, I_O = 1 A, T_J = 0 to 125 °C (L7812AC), T_J = -40 to 125 °C (L7812AB), unless otherwise specified.

Table 9. Electrical characteristics of L7812A

Symbol	Parameter	Test conditions	Min.	Typ.	Max.	Unit
V_O	Output voltage	T_J = 25°C	11.75	12	12.25	V
V_O	Output voltage	I_O = 5 mA to 1 A, V_I = 14.8 to 25 V	11.5	12	12.5	V
V_O	Output voltage	I_O = 1 A, V_I = 25 to 27 V, T_J = 25°C	11.5	12	12.5	V
ΔV_O (1)	Line regulation	V_I = 14.8 to 30 V, I_O = 500 mA, T_J = 25°C		13	120	mV
		V_I = 16 to 12 V		16	120	mV
		V_I = 16 to 12 V, T_J = 25°C		6	60	mV
		V_I = 14.5 to 27 V, T_J = 25°C		13	120	mV
ΔV_O (1)	Load regulation	I_O = 5 mA to 1 A		25	100	mV
		I_O = 5 mA to 1.5 A, T_J = 25°C		30	100	
		I_O = 250 to 750 mA		10	50	
I_q	Quiescent current	T_J = 25°C		4.4	6	mA
					6	mA
ΔI_q	Quiescent current change	V_I = 15 to 30 V, I_O = 500 mA			0.8	mA
		V_I = 14.8 to 27 V, T_J = 25°C			0.8	mA
		I_O = 5 mA to 1 A			0.5	mA
SVR	Supply voltage rejection	V_I = 15 to 25 V, f = 120 Hz, I_O = 500 mA		60		dB
V_d	Dropout voltage	I_O = 1 A, T_J = 25°C		2		V
eN	Output noise voltage	T_A = 25°C, B = 10 Hz to 100 kHz		10		$\mu V/V_O$
R_O	Output resistance	f = 1 kHz		18		mΩ
I_{sc}	Short circuit current	V_I = 35 V, T_A = 25°C		0.2		A
I_{scp}	Short circuit peak current	T_J = 25°C		2.2		A
$\Delta V_O/\Delta T$	Output voltage drift			-1		mV/°C

1. Load and line regulation are specified at constant junction temperature. Changes in V_O due to heating effects must be taken into account separately. Pulse testing with low duty cycle is used.

V_I = 23 V, I_O = 1 A, T_J = 0 to 125 °C (L7815AC), T_J = -40 to 125 °C (L7815AB), unless otherwise specified.

Table 10. Electrical characteristics of L7815A

Symbol	Parameter	Test conditions	Min.	Typ.	Max.	Unit
V_O	Output voltage	T_J = 25°C	14.7	15	15.3	V
V_O	Output voltage	I_O = 5 mA to 1 A, V_I = 17.9 to 28 V	14.4	15	15.6	V
V_O	Output voltage	I_O = 1 A, V_I = 28 to 30 V, T_J = 25°C	14.4	15	15.6	V
ΔV_O (1)	Line regulation	V_I = 17.9 to 30 V, I_O = 500 mA, T_J = 25°C		13	150	mV
		V_I = 20 to 26 V		16	150	mV
		V_I = 20 to 26 V, T_J = 25°C		6	75	mV
		V_I = 17.5 to 30 V, T_J = 25°C		13	150	mV
ΔV_O (1)	Load regulation	I_O = 5 mA to 1 A		25	100	mV
		I_O = 5 mA to 1.5 A, T_J = 25°C		30	100	
		I_O = 250 to 750 mA		10	50	
I_q	Quiescent current	T_J = 25°C		4.4	6	mA
					6	mA
ΔI_q	Quiescent current change	V_I = 17.5 to 30 V, I_O = 500 mA			0.8	mA
		V_I = 17.5 to 30 V, T_J = 25°C			0.8	mA
		I_O = 5 mA to 1 A			0.5	mA
SVR	Supply voltage rejection	V_I = 18.5 to 28.5 V, f = 120 Hz, I_O = 500 mA		58		dB
V_d	Dropout voltage	I_O = 1 A, T_J = 25°C		2		V
eN	Output noise voltage	T_A = 25°C, B = 10Hz to 100 kHz		10		$\mu V/V_O$
R_O	Output resistance	f = 1 kHz		19		mΩ
I_{sc}	Short circuit current	V_I = 35 V, T_A = 25°C		0.2		A
I_{scp}	Short circuit peak current	T_J = 25°C		2.2		A
$\Delta V_O/\Delta T$	Output voltage drift			-1		mV/°C

1. Load and line regulation are specified at constant junction temperature. Changes in V_O due to heating effects must be taken into account separately. Pulse testing with low duty cycle is used.

V_I = 33 V, I_O = 1 A, T_J = 0 to 125 °C (L7824AC), T_J = -40 to 125 °C (L7824AB), unless otherwise specified.

Table 11. Electrical characteristics of L7824A

Symbol	Parameter	Test conditions	Min.	Typ.	Max.	Unit
V_O	Output voltage	T_J = 25°C	23.5	24	24.5	V
V_O	Output voltage	I_O = 5 mA to 1 A, V_I = 27.3 to 37 V	23	24	25	V
V_O	Output voltage	I_O = 1 A, V_I = 37 to 38 V, T_J = 25°C	23	24	25	V
ΔV_O (1)	Line regulation	V_I = 27 to 38 V, I_O = 500 mA, T_J = 25°C		31	240	mV
		V_I = 30 to 36 V		35	200	mV
		V_I = 30 to 36 V, T_J = 25°C		14	120	mV
		V_I = 26.7 to 38 V, T_J = 25°C		31	240	mV
ΔV_O (1)	Load regulation	I_O = 5 mA to 1 A		25	100	mV
		I_O = 5 mA to 1.5 A, T_J = 25°C		30	100	
		I_O = 250 to 750 mA		10	50	
I_q	Quiescent current	T_J = 25°C		4.6	6	mA
					6	mA
ΔI_q	Quiescent current change	V_I = 27.3 to 38 V, I_O = 500 mA			0.8	mA
		V_I = 27.3 to 38 V, T_J = 25°C			0.8	mA
		I_O = 5 mA to 1 A			0.5	mA
SVR	Supply voltage rejection	V_I = 28 to 38 V, f = 120 Hz, I_O = 500 mA		54		dB
V_d	Dropout voltage	I_O = 1 A, T_J = 25°C		2		V
eN	Output noise voltage	T_A = 25°C, B = 10 Hz to 100 kHz		10		µV/V_O
R_O	Output resistance	f = 1 kHz		20		mΩ
I_{sc}	Short circuit current	V_I = 35 V, T_A = 25°C		0.2		A
I_{scp}	Short circuit peak current	T_J = 25°C		2.2		A
$\Delta V_O/\Delta T$	Output voltage drift			-1.5		mV/°C

1. Load and line regulation are specified at constant junction temperature. Changes in V_O due to heating effects must be taken into account separately. Pulse testing with low duty cycle is used.

Refer to the test circuits, T_J = 0 to 125 °C, V_I = 10 V, I_O = 500 mA, C_I = 0.33 µF, C_O = 0.1 µF unless otherwise specified.

Table 12. Electrical characteristics of L7805C

Symbol	Parameter	Test conditions	Min.	Typ.	Max.	Unit
V_O	Output voltage	T_J = 25°C	4.8	5	5.2	V
V_O	Output voltage	I_O = 5 mA to 1 A, V_I = 7 to 18 V	4.75	5	5.25	V
V_O	Output voltage	I_O = 1 A, V_I = 18 to 20V, T_J = 25°C	4.75	5	5.25	V
ΔV_O(1)	Line regulation	V_I = 7 to 25 V, T_J = 25°C		3	100	mV
		V_I = 8 to 12 V, T_J = 25°C		1	50	
ΔV_O(1)	Load regulation	I_O = 5 mA to 1.5 A, T_J = 25°C			100	mV
		I_O = 250 to 750 mA, T_J = 25°C			50	
I_d	Quiescent current	T_J = 25°C			8	mA
ΔI_d	Quiescent current change	I_O = 5 mA to 1 A			0.5	mA
		V_I = 7 to 23 V			0.8	
$\Delta V_O/\Delta T$	Output voltage drift	I_O = 5 mA		-1.1		mV/°C
eN	Output noise voltage	B = 10 Hz to 100 kHz, T_J = 25°C		40		µV/V_O
SVR	Supply voltage rejection	V_I = 8 to 18 V, f = 120 Hz	62			dB
V_d	Dropout voltage	I_O = 1 A, T_J = 25°C		2		V
R_O	Output resistance	f = 1 kHz		17		mΩ
I_{sc}	Short circuit current	V_I = 35 V, T_J = 25°C		0.75		A
I_{scp}	Short circuit peak current	T_J = 25°C		2.2		A

1. Load and line regulation are specified at constant junction temperature. Changes in V_O due to heating effects must be taken into account separately. Pulse testing with low duty cycle is used.

Refer to the test circuits, T_J = 0 to 125 °C, V_I = 11 V, I_O = 500 mA, C_I = 0.33 µF, C_O = 0.1 µF unless otherwise specified.

Table 13. Electrical characteristics of L7806C

Symbol	Parameter	Test conditions	Min.	Typ.	Max.	Unit
V_O	Output voltage	T_J = 25°C	5.75	6	6.25	V
V_O	Output voltage	I_O = 5 mA to 1 A, V_I = 8 to 19 V	5.7	6	6.3	V
V_O	Output voltage	I_O = 1 A, V_I = 19 to 21 V, T_J = 25°C	5.7	6	6.3	V
ΔV_O(1)	Line regulation	V_I = 8 to 25 V, T_J = 25°C			120	mV
		V_I = 9 to 13 V, T_J = 25°C			60	
ΔV_O(1)	Load regulation	I_O = 5 mA to 1.5 A, T_J = 25°C			120	mV
		I_O = 250 to 750 mA, T_J = 25°C			60	
I_d	Quiescent current	T_J = 25°C			8	mA
ΔI_d	Quiescent current change	I_O = 5 mA to 1 A			0.5	mA
		V_I = 8 to 24 V			1.3	
$\Delta V_O/\Delta T$	Output voltage drift	I_O = 5 mA		-0.8		mV/°C
eN	Output noise voltage	B = 10 Hz to 100 kHz, T_J = 25°C		45		µV/V_O
SVR	Supply voltage rejection	V_I = 9 to 19 V, f = 120 Hz	59			dB
V_d	Dropout voltage	I_O = 1 A, T_J = 25°C		2		V
R_O	Output resistance	f = 1 kHz		19		mΩ
I_{sc}	Short circuit current	V_I = 35 V, T_J = 25°C		0.55		A
I_{scp}	Short circuit peak current	T_J = 25°C		2.2		A

1. Load and line regulation are specified at constant junction temperature. Changes in V_O due to heating effects must be taken into account separately. Pulse testing with low duty cycle is used.

Refer to the test circuits, T_J = 0 to 125 °C, V_I = 14 V, I_O = 500 mA, C_I = 0.33 µF, C_O = 0.1 µF unless otherwise specified.

Table 14. Electrical characteristics of L7808C

Symbol	Parameter	Test conditions	Min.	Typ.	Max.	Unit
V_O	Output voltage	T_J = 25°C	7.7	8	8.3	V
V_O	Output voltage	I_O = 5 mA to 1 A, V_I = 10.5 to 21 V	7.6	8	8.4	V
V_O	Output voltage	I_O = 1 A, V_I = 21 to 25 V, T_J = 25°C	7.6	8	8.4	V
ΔV_O(1)	Line regulation	V_I = 10.5 to 25 V, T_J = 25°C			160	mV
		V_I = 11 to 17 V, T_J = 25°C			80	
ΔV_O(1)	Load regulation	I_O = 5 mA to 1.5 A, T_J = 25°C			160	mV
		I_O = 250 to 750 mA, T_J = 25°C			80	
I_d	Quiescent current	T_J = 25°C			8	mA
ΔI_d	Quiescent current change	I_O = 5 mA to 1 A			0.5	mA
		V_I = 10.5 to 25 V			1	
$\Delta V_O/\Delta T$	Output voltage drift	I_O = 5 mA		-0.8		mV/°C
eN	Output noise voltage	B = 10 Hz to 100 kHz, T_J = 25°C		52		µV/V_O
SVR	Supply voltage rejection	V_I = 11.5 to 21.5 V, f = 120 Hz	56			dB
V_d	Dropout voltage	I_O = 1 A, T_J = 25°C		2		V
R_O	Output resistance	f = 1 kHz		16		mΩ
I_{sc}	Short circuit current	V_I = 35 V, T_J = 25°C		0.45		A
I_{scp}	Short circuit peak current	T_J = 25°C		2.2		A

1. Load and line regulation are specified at constant junction temperature. Changes in V_O due to heating effects must be taken into account separately. Pulse testing with low duty cycle is used.

Refer to the test circuits, T_J = 0 to 125 °C, V_I = 14.5 V, I_O = 500 mA, C_I = 0.33 µF, C_O = 0.1 µF unless otherwise specified.

Table 15. Electrical characteristics of L7885C

Symbol	Parameter	Test conditions	Min.	Typ.	Max.	Unit
V_O	Output voltage	T_J = 25°C	8.2	8.5	8.8	V
V_O	Output voltage	I_O = 5 mA to 1 A, V_I = 11 to 21.5 V	8.1	8.5	8.9	V
V_O	Output voltage	I_O = 1 A, V_I = 21.5 to 26 V, T_J = 25°C	8.1	8.5	8.9	V
ΔV_O(1)	Line regulation	V_I = 11 to 27 V, T_J = 25°C			160	mV
		V_I = 11.5 to 17.5 V, T_J = 25°C			80	
ΔV_O(1)	Load regulation	I_O = 5 mA to 1.5 A, T_J = 25°C			160	mV
		I_O = 250 to 750 mA, T_J = 25°C			80	
I_d	Quiescent current	T_J = 25°C			8	mA
ΔI_d	Quiescent current change	I_O = 5 mA to 1 A			0.5	mA
		V_I = 11 to 26 V			1	
$\Delta V_O/\Delta T$	Output voltage drift	I_O = 5 mA		-0.8		mV/°C
eN	Output noise voltage	B = 10 Hz to 100 kHz, T_J = 25°C		55		µV/V_O
SVR	Supply voltage rejection	V_I = 12 to 22 V, f = 120 Hz	56			dB
V_d	Dropout voltage	I_O = 1 A, T_J = 25°C		2		V
R_O	Output resistance	f = 1 kHz		16		mΩ
I_{sc}	Short circuit current	V_I = 35 V, T_J = 25°C		0.45		A
I_{scp}	Short circuit peak current	T_J = 25°C		2.2		A

1. Load and line regulation are specified at constant junction temperature. Changes in V_O due to heating effects must be taken into account separately. Pulse testing with low duty cycle is used.

Refer to the test circuits, T_J = 0 to 125 °C, V_I = 15 V, I_O = 500 mA, C_I = 0.33 µF, C_O = 0.1 µF unless otherwise specified.

Table 16. Electrical characteristics of L7809C

Symbol	Parameter	Test conditions	Min.	Typ.	Max.	Unit
V_O	Output voltage	T_J = 25°C	8.64	9	9.36	V
V_O	Output voltage	I_O = 5 mA to 1 A, V_I = 11.5 to 22 V	8.55	9	9.45	V
V_O	Output voltage	I_O = 1 A, V_I = 22 to 26 V, T_J = 25°C	8.55	9	9.45	V
ΔV_O(1)	Line regulation	V_I = 11.5 to 26 V, T_J = 25°C			180	mV
		V_I = 12 to 18 V, T_J = 25°C			90	
ΔV_O(1)	Load regulation	I_O = 5 mA to 1.5 A, T_J = 25°C			180	mV
		I_O = 250 to 750 mA, T_J = 25°C			90	
I_d	Quiescent current	T_J = 25°C			8	mA
ΔI_d	Quiescent current change	I_O = 5 mA to 1 A			0.5	mA
		V_I = 11.5 to 26 V			1	
$\Delta V_O/\Delta T$	Output voltage drift	I_O = 5 mA		-1		mV/°C
eN	Output noise voltage	B = 10 Hz to 100 kHz, T_J = 25°C		70		µV/V_O
SVR	Supply voltage rejection	V_I = 12 to 23 V, f = 120 Hz	55			dB
V_d	Dropout voltage	I_O = 1 A, T_J = 25°C		2		V
R_O	Output resistance	f = 1 kHz		17		mΩ
I_{sc}	Short circuit current	V_I = 35 V, T_J = 25°C		0.40		A
I_{scp}	Short circuit peak current	T_J = 25°C		2.2		A

1. Load and line regulation are specified at constant junction temperature. Changes in V_O due to heating effects must be taken into account separately. Pulse testing with low duty cycle is used.

Refer to the test circuits, T_J = 0 to 125 °C, V_I = 15 V, I_O = 500 mA, C_I = 0.33 µF, C_O = 0.1 µF unless otherwise specified.

Table 17. Electrical characteristics of L7810C

Symbol	Parameter	Test conditions	Min.	Typ.	Max.	Unit
V_O	Output voltage	T_J = 25°C	9.6	10	10.4	V
V_O	Output voltage	I_O = 5 mA to 1 A, V_I = 12.5 to 23 V	9.5	10	10.5	V
V_O	Output voltage	I_O = 1 A, V_I = 23 to 26 V, T_J = 25°C	9.5	10	10.5	V
ΔV_O(1)	Line regulation	V_I = 12.5 to 26 V, T_J = 25°C			200	mV
		V_I = 13.5 to 19 V, T_J = 25°C			100	
ΔV_O(1)	Load regulation	I_O = 5 mA to 1.5 A, T_J = 25°C			200	mV
		I_O = 250 to 750 mA, T_J = 25°C			100	
I_d	Quiescent current	T_J = 25°C			8	mA
ΔI_d	Quiescent current change	I_O = 5 mA to 1 A			0.5	mA
		V_I = 12.5 to 26 V			1	
$\Delta V_O/\Delta T$	Output voltage drift	I_O = 5 mA		-1		mV/°C
eN	Output noise voltage	B = 10 Hz to 100 kHz, T_J = 25°C		70		µV/V_O
SVR	Supply voltage rejection	V_I = 13 to 23 V, f = 120 Hz	55			dB
V_d	Dropout voltage	I_O = 1 A, T_J = 25°C		2		V
R_O	Output resistance	f = 1 kHz		17		mΩ
I_{sc}	Short circuit current	V_I = 35 V, T_J = 25°C		0.40		A
I_{scp}	Short circuit peak current	T_J = 25°C		2.2		A

1. Load and line regulation are specified at constant junction temperature. Changes in V_O due to heating effects must be taken into account separately. Pulse testing with low duty cycle is used.

Refer to the test circuits, T_J = 0 to 125 °C, V_I = 19 V, I_O = 500 mA, C_I = 0.33 µF, C_O = 0.1 µF unless otherwise specified.

Table 18. Electrical characteristics of L7812C

Symbol	Parameter	Test conditions	Min.	Typ.	Max.	Unit
V_O	Output voltage	T_J = 25°C	11.5	12	12.5	V
V_O	Output voltage	I_O = 5 mA to 1 A, V_I = 14.5 to 25 V	11.4	12	12.6	V
V_O	Output voltage	I_O = 1 A, V_I = 25 to 27 V, T_J = 25°C	11.4	12	12.6	V
ΔV_O(1)	Line regulation	V_I = 14.5 to 30 V, T_J = 25°C			240	mV
		V_I = 16 to 22 V, T_J = 25°C			120	
ΔV_O(1)	Load regulation	I_O = 5 mA to 1.5 A, T_J = 25°C			240	mV
		I_O = 250 to 750 mA, T_J = 25°C			120	
I_d	Quiescent current	T_J = 25°C			8	mA
ΔI_d	Quiescent current change	I_O = 5 mA to 1 A			0.5	mA
		V_I = 14.5 to 30 V			1	
$\Delta V_O/\Delta T$	Output voltage drift	I_O = 5 mA		-1		mV/°C
eN	Output noise voltage	B = 10 Hz to 100 kHz, T_J = 25°C		75		µV/V_O
SVR	Supply voltage rejection	V_I = 15 to 25 V, f = 120 Hz	55			dB
V_d	Dropout voltage	I_O = 1 A, T_J = 25°C		2		V
R_O	Output resistance	f = 1 kHz		18		mΩ
I_{sc}	Short circuit current	V_I = 35 V, T_J = 25°C		0.35		A
I_{scp}	Short circuit peak current	T_J = 25°C		2.2		A

1. Load and line regulation are specified at constant junction temperature. Changes in V_O due to heating effects must be taken into account separately. Pulse testing with low duty cycle is used.

Refer to the test circuits, T_J = 0 to 125 °C, V_I = 23 V, I_O = 500 mA, C_I = 0.33 µF, C_O = 0.1 µF unless otherwise specified.

Table 19. Electrical characteristics of L7815C

Symbol	Parameter	Test conditions	Min.	Typ.	Max.	Unit
V_O	Output voltage	T_J = 25°C	14.4	15	15.6	V
V_O	Output voltage	I_O = 5 mA to 1 A, V_I = 17.5 to 28 V	14.25	15	15.75	V
V_O	Output voltage	I_O = 1 A, V_I = 28 to 30 V, T_J = 25°C	14.25	15	15.75	V
ΔV_O(1)	Line regulation	V_I = 17.5 to 30 V, T_J = 25°C			300	mV
		V_I = 20 to 26 V, T_J = 25°C			150	
ΔV_O(1)	Load regulation	I_O = 5 mA to 1.5 A, T_J = 25°C			300	mV
		I_O = 250 to 750 mA, T_J = 25°C			150	
I_d	Quiescent current	T_J = 25°C			8	mA
ΔI_d	Quiescent current change	I_O = 5 mA to 1A			0.5	mA
		V_I = 17.5 to 30 V			1	
$\Delta V_O/\Delta T$	Output voltage drift	I_O = 5 mA		-1		mV/°C
eN	Output noise voltage	B = 10 Hz to 100kHz, T_J = 25°C		90		µV/V_O
SVR	Supply voltage rejection	V_I = 18.5 to 28.5 V, f = 120 Hz	54			dB
V_d	Dropout voltage	I_O = 1 A, T_J = 25°C		2		V
R_O	Output resistance	f = 1 kHz		19		mΩ
I_{sc}	Short circuit current	V_I = 35 V, T_J = 25°C		0.23		A
I_{scp}	Short circuit peak current	T_J = 25°C		2.2		A

1. Load and line regulation are specified at constant junction temperature. Changes in V_O due to heating effects must be taken into account separately. Pulse testing with low duty cycle is used.

Refer to the test circuits, T_J = 0 to 125 °C, V_I = 26 V, I_O = 500 mA, C_I = 0.33 µF, C_O = 0.1 µF unless otherwise specified.

Table 20. Electrical characteristics of L7818C

Symbol	Parameter	Test conditions	Min.	Typ.	Max.	Unit
V_O	Output voltage	T_J = 25°C	17.3	18	18.7	V
V_O	Output voltage	I_O = 5 mA to 1 A, V_I = 21 to 31 V	17.1	18	18.9	V
V_O	Output voltage	I_O = 1 A, V_I = 31 to 33 V, T_J = 25°C	17.1	18	18.9	V
ΔV_O(1)	Line regulation	V_I = 21 to 33 V, T_J = 25°C			360	mV
		V_I = 24 to 30 V, T_J = 25°C			180	
ΔV_O(1)	Load regulation	I_O = 5 mA to 1.5 A, T_J = 25°C			360	mV
		I_O = 250 to 750 mA, T_J = 25°C			180	
I_d	Quiescent current	T_J = 25°C			8	mA
ΔI_d	Quiescent current change	I_O = 5 mA to 1 A			0.5	mA
		V_I = 21 to 33 V			1	
$\Delta V_O/\Delta T$	Output voltage drift	I_O = 5 mA		-1		mV/°C
eN	Output noise voltage	B = 10 Hz to 100 kHz, T_J = 25°C		110		µV/V_O
SVR	Supply voltage rejection	V_I = 22 to 32 V, f = 120 Hz	53			dB
V_d	Dropout voltage	I_O = 1 A, T_J = 25°C		2		V
R_O	Output resistance	f = 1 kHz		22		mΩ
I_{sc}	Short circuit current	V_I = 35 V, T_J = 25°C		0.20		A
I_{scp}	Short circuit peak current	T_J = 25°C		2.1		A

1. Load and line regulation are specified at constant junction temperature. Changes in V_O due to heating effects must be taken into account separately. Pulse testing with low duty cycle is used.

Refer to the test circuits, T_J = 0 to 125 °C, V_I = 28 V, I_O = 500 mA, C_I = 0.33 µF, C_O = 0.1 µF unless otherwise specified.

Table 21. Electrical characteristics of L7820C

Symbol	Parameter	Test conditions	Min.	Typ.	Max.	Unit
V_O	Output voltage	T_J = 25°C	19.2	20	20.8	V
V_O	Output voltage	I_O = 5 mA to 1 A, V_I = 23 to 33 V	19	20	21	V
V_O	Output voltage	I_O = 1 A, V_I = 33 to 35 V, T_J = 25°C	19	20	21	V
ΔV_O(1)	Line regulation	V_I = 22.5 to 35 V, T_J = 25°C			400	mV
		V_I = 26 to 32 V, T_J = 25°C			200	
ΔV_O(1)	Load regulation	I_O = 5 mA to 1.5 A, T_J = 25°C			400	mV
		I_O = 250 to 750 mA, T_J = 25°C			200	
I_d	Quiescent current	T_J = 25°C			8	mA
ΔI_d	Quiescent current change	I_O = 5 mA to 1 A			0.5	mA
		V_I = 23 to 35 V			1	
$\Delta V_O/\Delta T$	Output voltage drift	I_O = 5 mA		-1		mV/°C
eN	Output noise voltage	B = 10 Hz to 100 kHz, T_J = 25°C		150		µV/V_O
SVR	Supply voltage rejection	V_I = 24 to 35 V, f = 120 Hz	52			dB
V_d	Dropout voltage	I_O = 1 A, T_J = 25°C		2		V
R_O	Output resistance	f = 1 kHz		24		mΩ
I_{sc}	Short circuit current	V_I = 35 V, T_J = 25°C		0.18		A
I_{scp}	Short circuit peak current	T_J = 25°C		2.1		A

1. Load and line regulation are specified at constant junction temperature. Changes in V_O due to heating effects must be taken into account separately. Pulse testing with low duty cycle is used.

Refer to the test circuits, T_J = 0 to 125 °C, V_I = 33 V, I_O = 500 mA, C_I = 0.33 µF, C_O = 0.1 µF unless otherwise specified.

Table 22. Electrical characteristics of L7824C

Symbol	Parameter	Test conditions	Min.	Typ.	Max.	Unit
V_O	Output voltage	T_J = 25°C	23	24	25	V
V_O	Output voltage	I_O = 5 mA to 1 A, V_I = 27 to 37 V	22.8	24	25.2	V
V_O	Output voltage	I_O = 1 A, V_I = 37 to 38 V, T_J = 25°C	22.8	24	25.2	V
ΔV_O(1)	Line regulation	V_I = 27 to 38 V, T_J = 25°C			480	mV
		V_I = 30 to 36 V, T_J = 25°C			240	
ΔV_O(1)	Load regulation	I_O = 5 mA to 1.5 A, T_J = 25°C			480	mV
		I_O = 250 to 750 mA, T_J = 25°C			240	
I_d	Quiescent current	T_J = 25°C			8	mA
ΔI_d	Quiescent current change	I_O = 5 mA to 1 A			0.5	mA
		V_I = 27 to 38 V			1	
$\Delta V_O/\Delta T$	Output voltage drift	I_O = 5 mA		-1.5		mV/°C
eN	Output noise voltage	B = 10 Hz to 100 kHz, T_J = 25°C		170		µV/V_O
SVR	Supply voltage rejection	V_I = 28 to 38 V, f = 120 Hz	50			dB
V_d	Dropout voltage	I_O = 1 A, T_J = 25°C		2		V
R_O	Output resistance	f = 1 kHz		28		mΩ
I_{sc}	Short circuit current	V_I = 35 V, T_J = 25°C		0.15		A
I_{scp}	Short circuit peak current	T_J = 25°C		2.1		A

1. Load and line regulation are specified at constant junction temperature. Changes in V_O due to heating effects must be taken into account separately. Pulse testing with low duty cycle is used.

6 Application information

6.1 Design consideration

The L78xx Series of fixed voltage regulators are designed with thermal overload protection that shuts down the circuit when subjected to an excessive power overload condition, internal short-circuit protection that limits the maximum current the circuit will pass, and output transistor safe-area compensation that reduces the output short-circuit current as the voltage across the pass transistor is increased. In many low current applications, compensation capacitors are not required. However, it is recommended that the regulator input be bypassed with capacitor if the regulator is connected to the power supply filter with long lengths, or if the output load capacitance is large. An input bypass capacitor should be selected to provide good high frequency characteristics to insure stable operation under all load conditions. A 0.33 µF or larger tantalum, mylar or other capacitor having low internal impedance at high frequencies should be chosen. The bypass capacitor should be mounted with the shortest possible leads directly across the regulators input terminals. Normally good construction techniques should be used to minimize ground loops and lead resistance drops since the regulator has no external sense lead.

The addition of an operational amplifier allows adjustment to higher or intermediate values while retaining regulation characteristics. The minimum voltage obtained with the arrangement is 2 V greater than the regulator voltage.

The circuit of *Figure 13* can be modified to provide supply protection against short circuit by adding a short circuit sense resistor, RSC, and an additional PNP transistor. The current sensing PNP must be able to handle the short circuit current of the three terminal regulator Therefore a four ampere plastic power transistor is specified.

Figure 8. Fixed output regulator

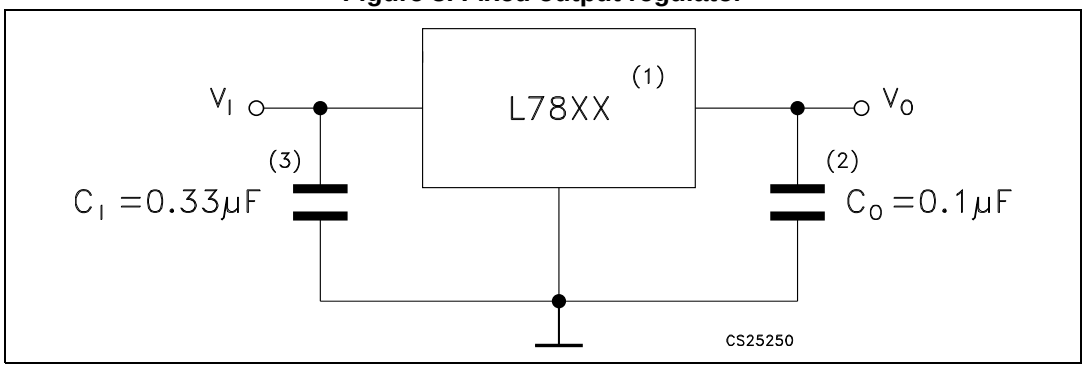

1. To specify an output voltage, substitute voltage value for "XX".
2. Although no output capacitor is need for stability, it does improve transient response.
3. Required if regulator is locate an appreciable distance from power supply filter.

Figure 9. Current regulator

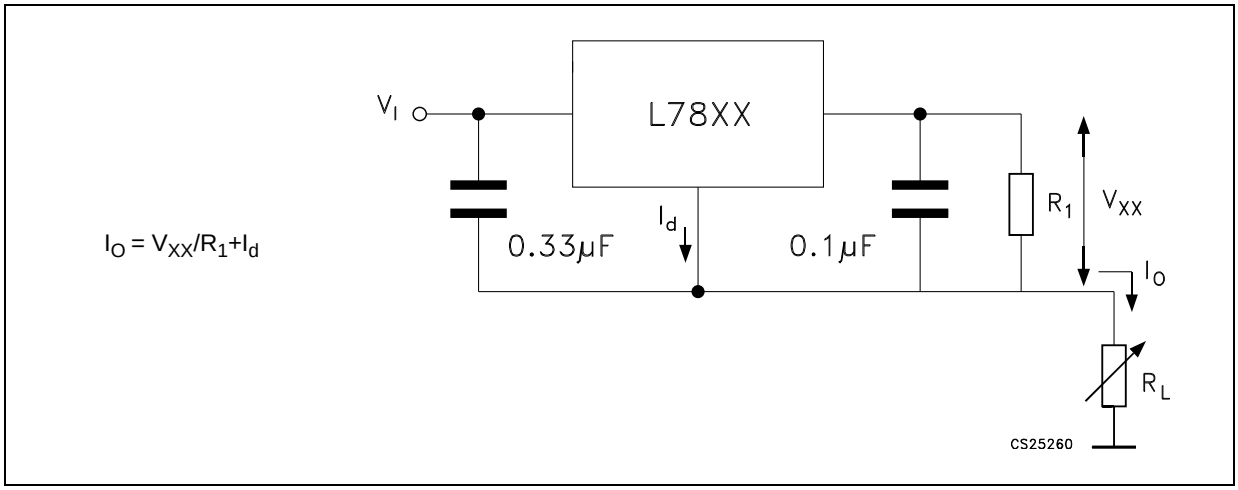

Figure 10. Circuit for increasing output voltage

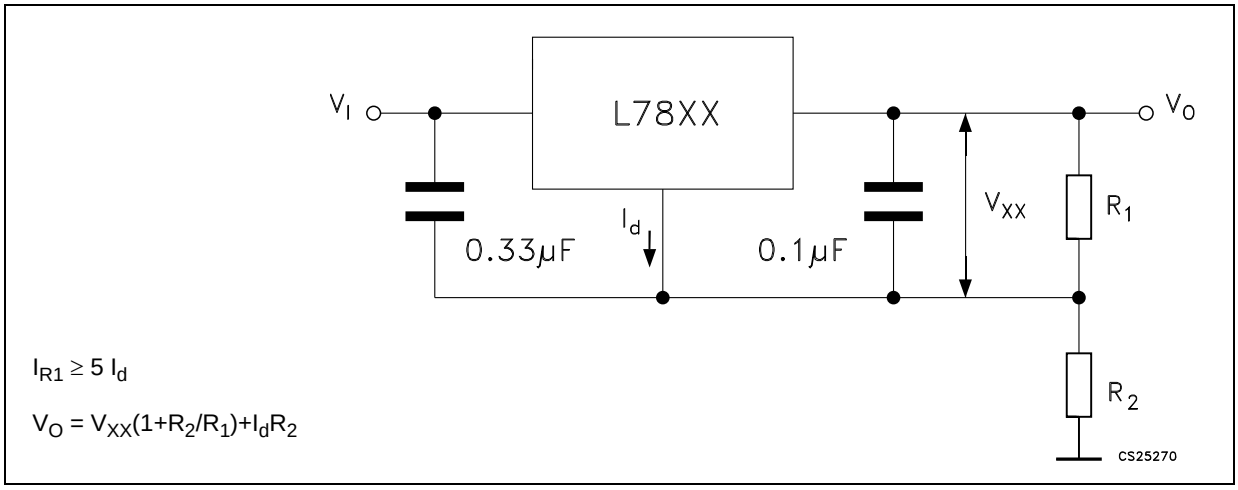

Figure 11. Adjustable output regulator (7 to 30 V)

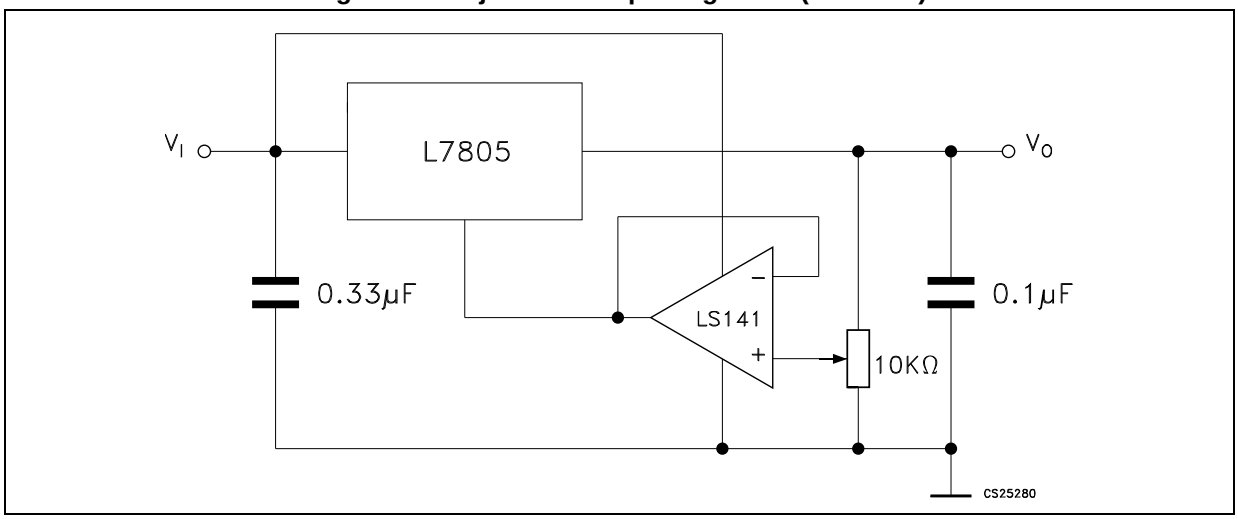

Figure 12. 0.5 to 10 V regulator

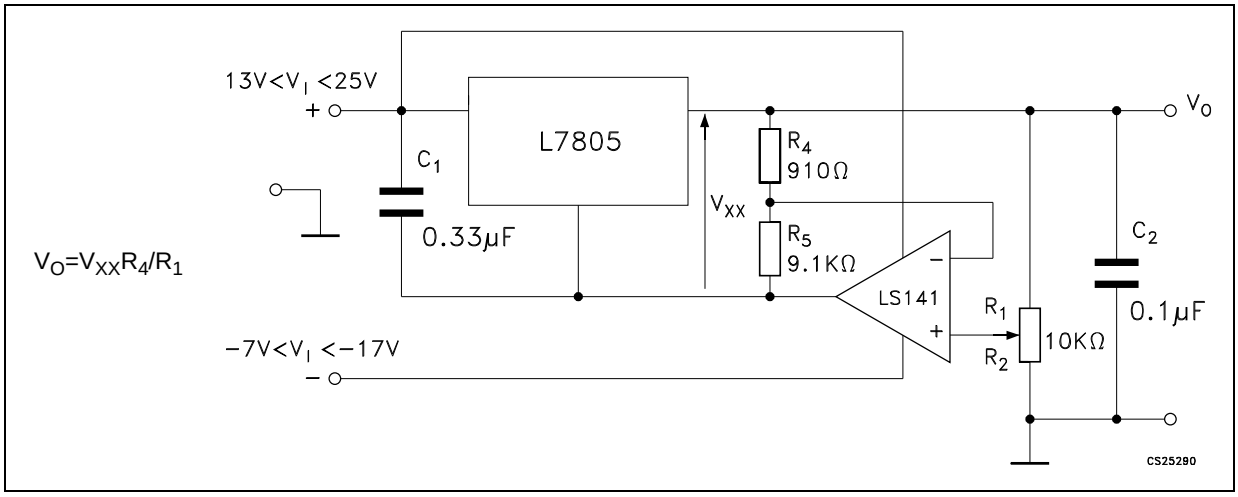

Figure 13. High current voltage regulator

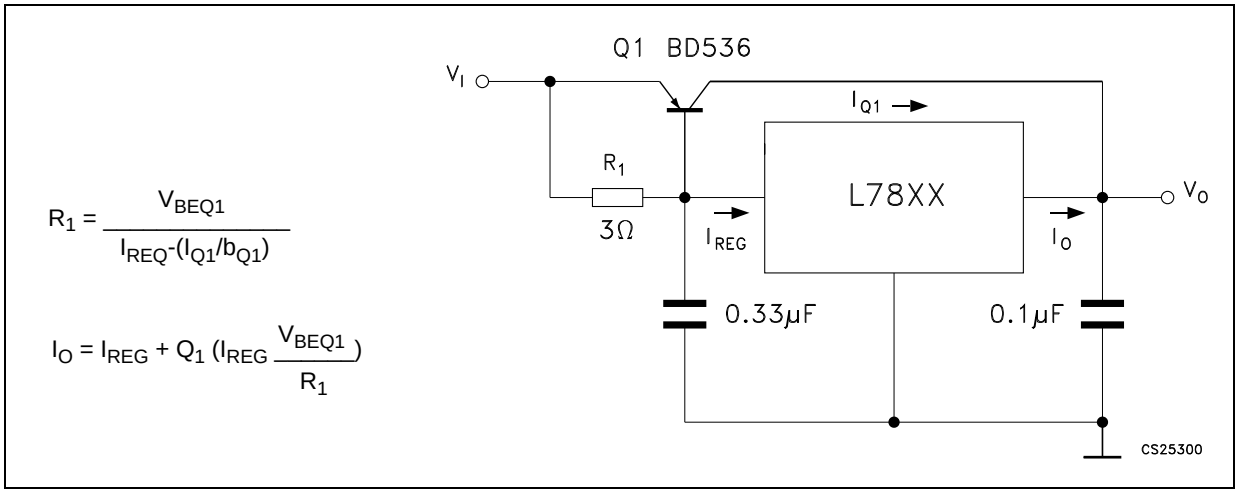

Figure 14. High output current with short circuit protection

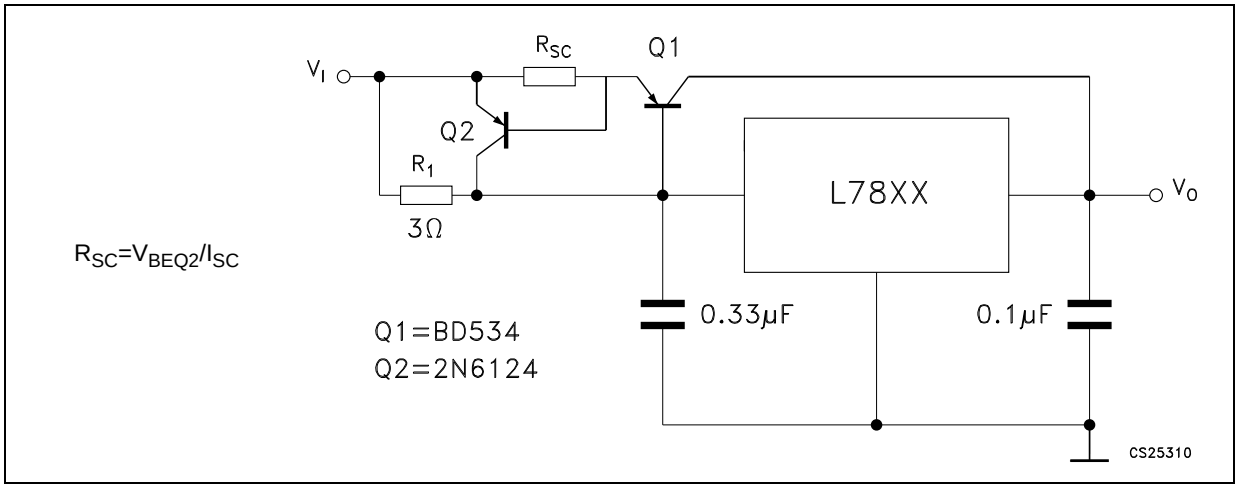

Figure 15. Tracking voltage regulator

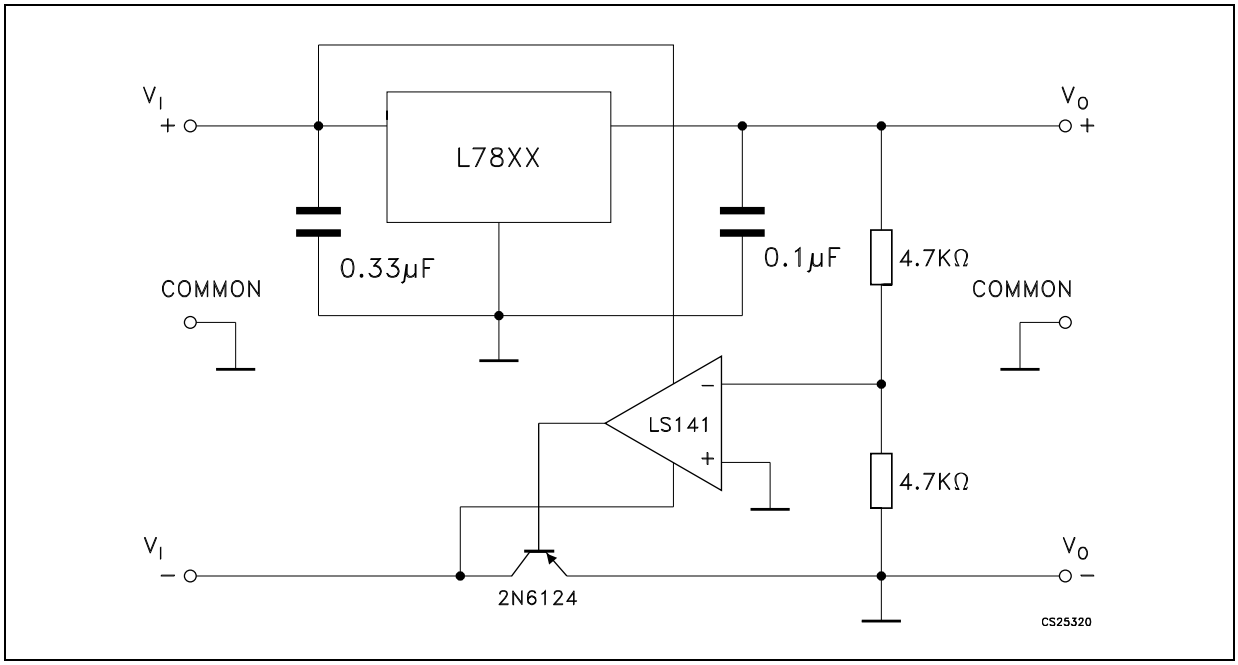

Figure 16. Split power supply (± 15 V - 1 A)

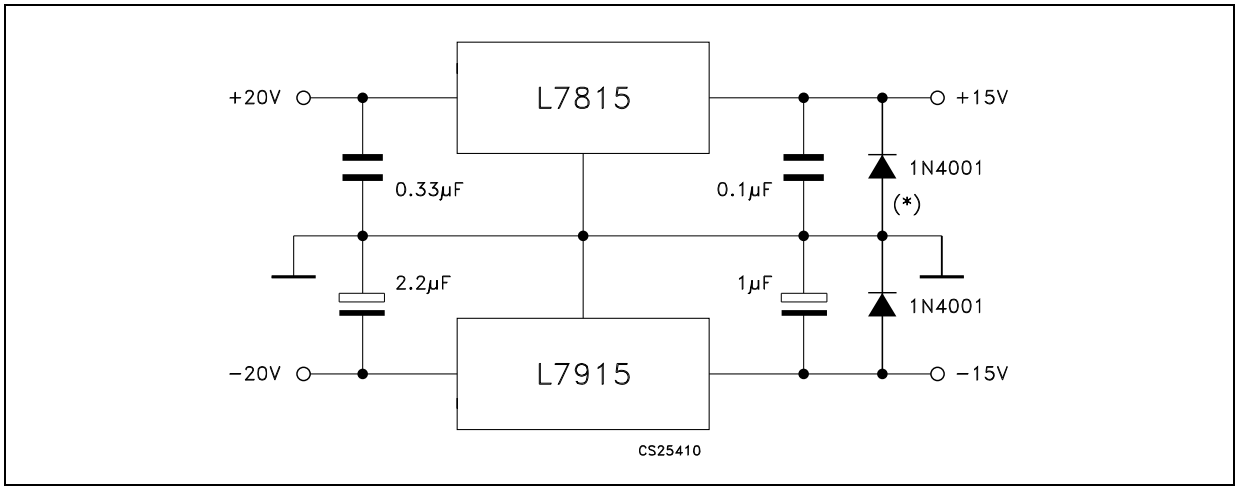

* Against potential latch-up problems.

Figure 17. Negative output voltage circuit

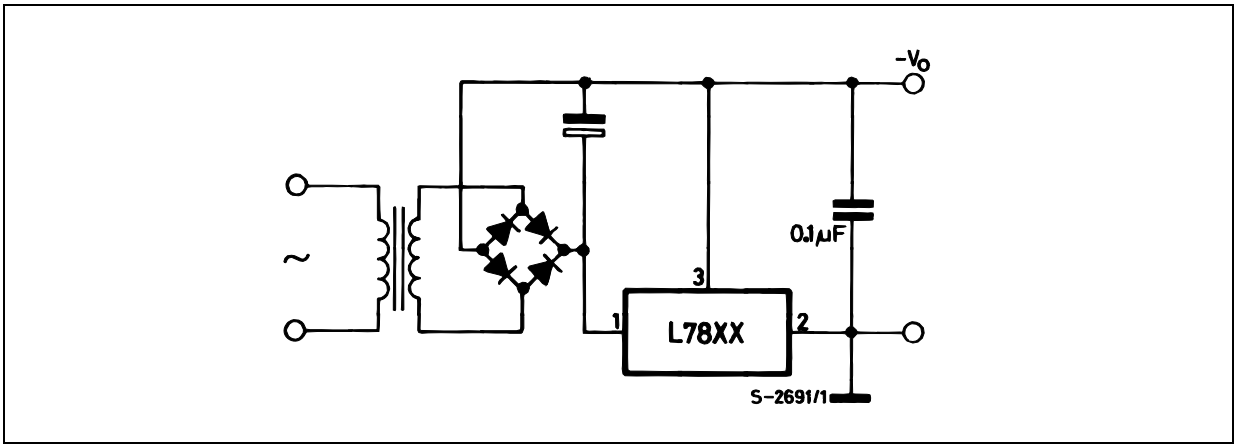

Figure 18. Switching regulator

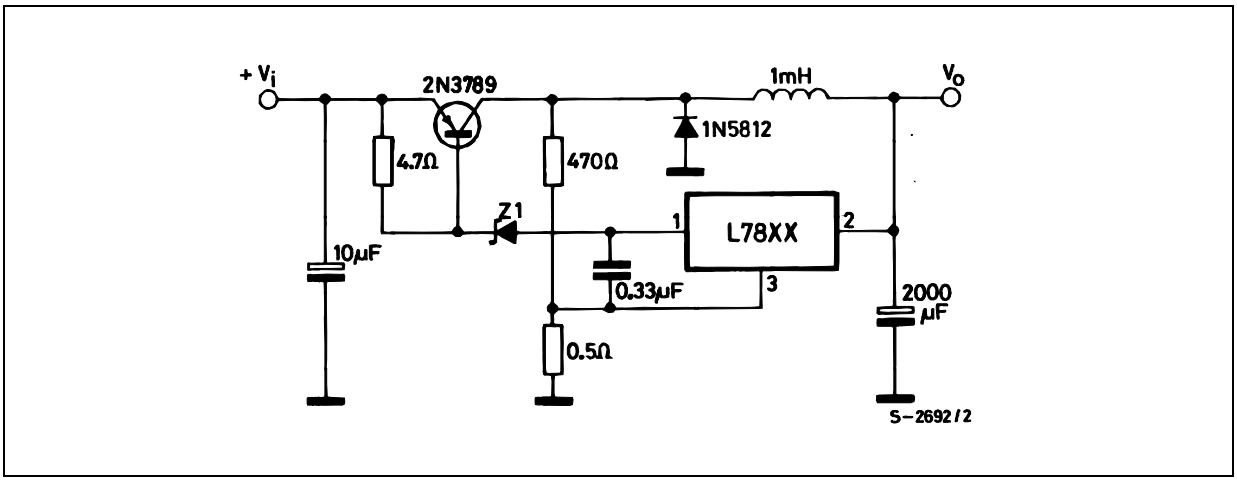

Figure 19. High input voltage circuit (configuration 1)

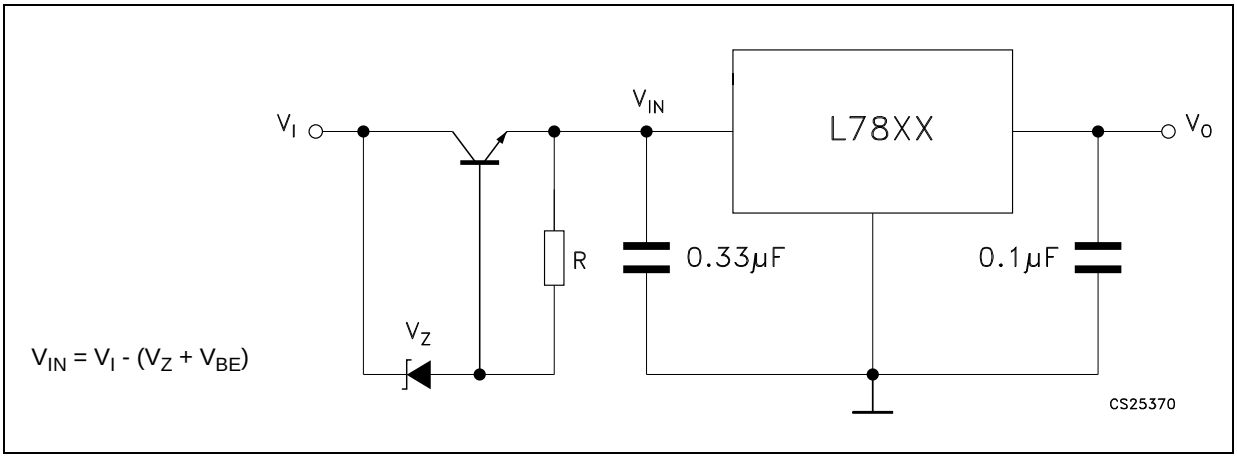

Figure 20. High input voltage circuit (configuration 2)

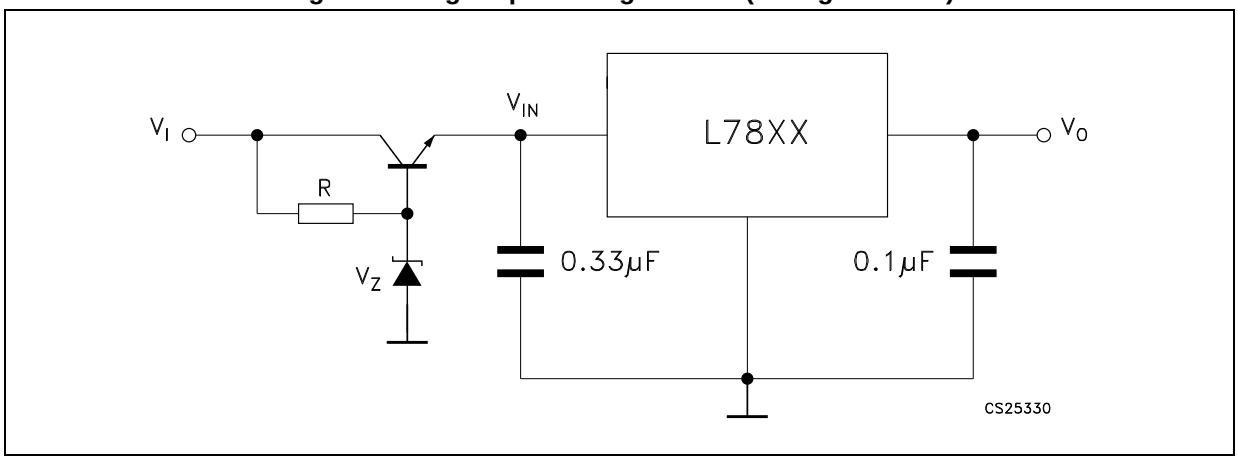

Figure 21. High output voltage regulator

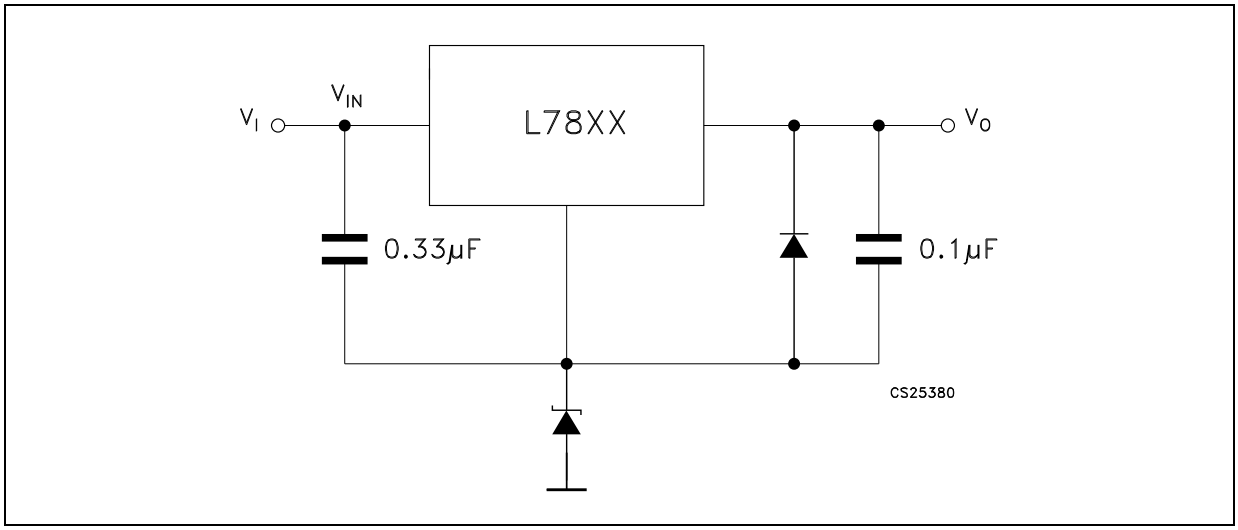

Figure 22. High input and output voltage

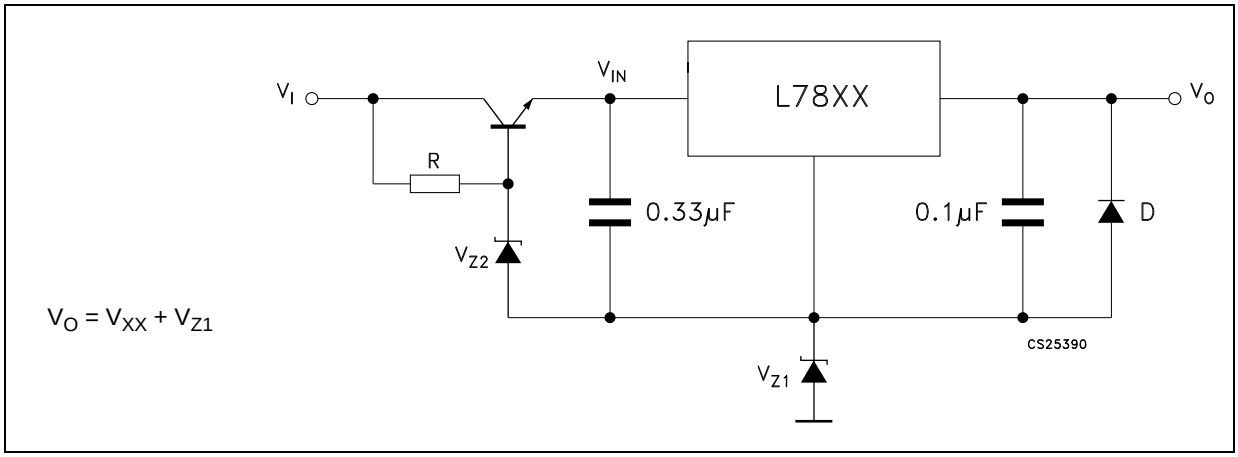

Figure 23. Reducing power dissipation with dropping resistor

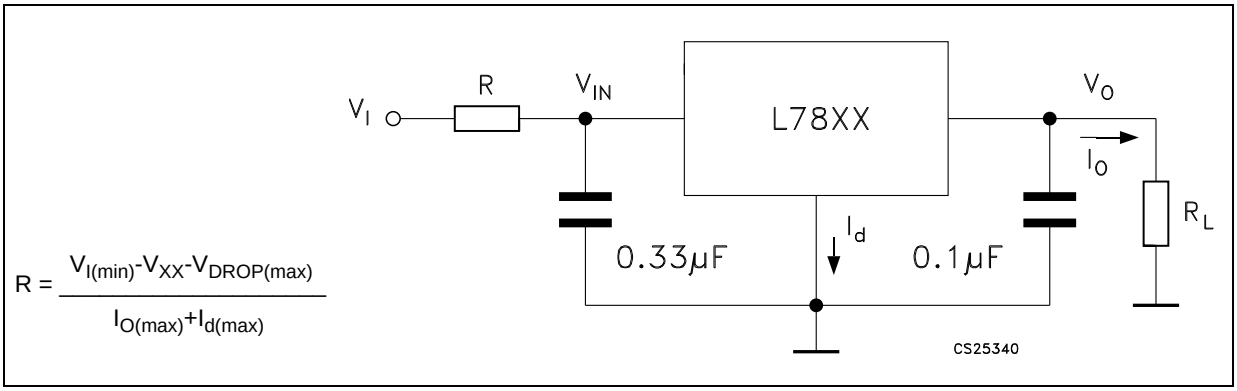

Figure 24. Remote shutdown

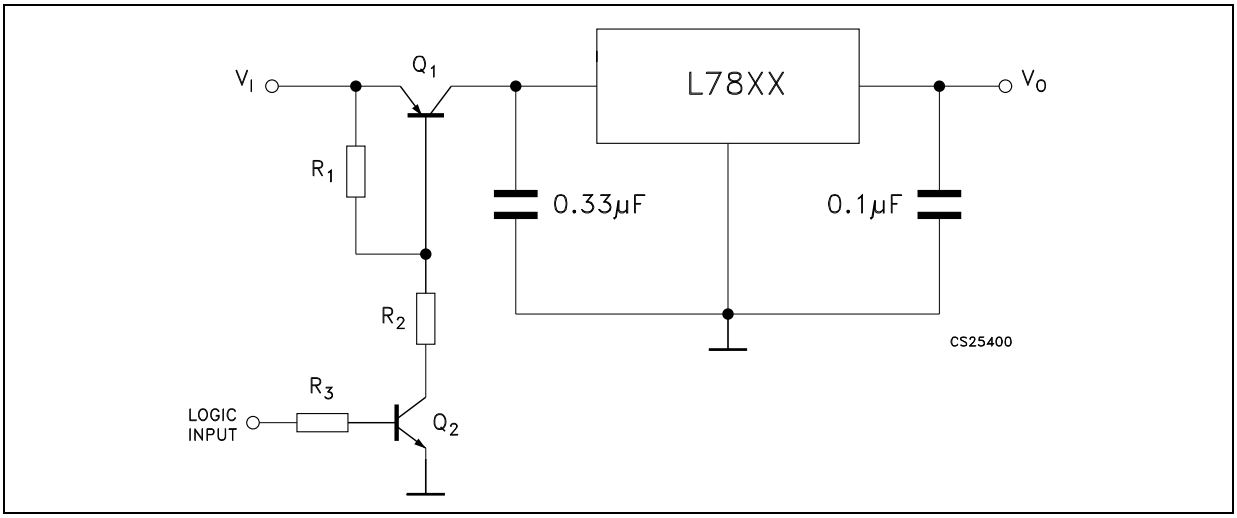

Figure 25. Power AM modulator (unity voltage gain, $I_O \leq 0.5$)

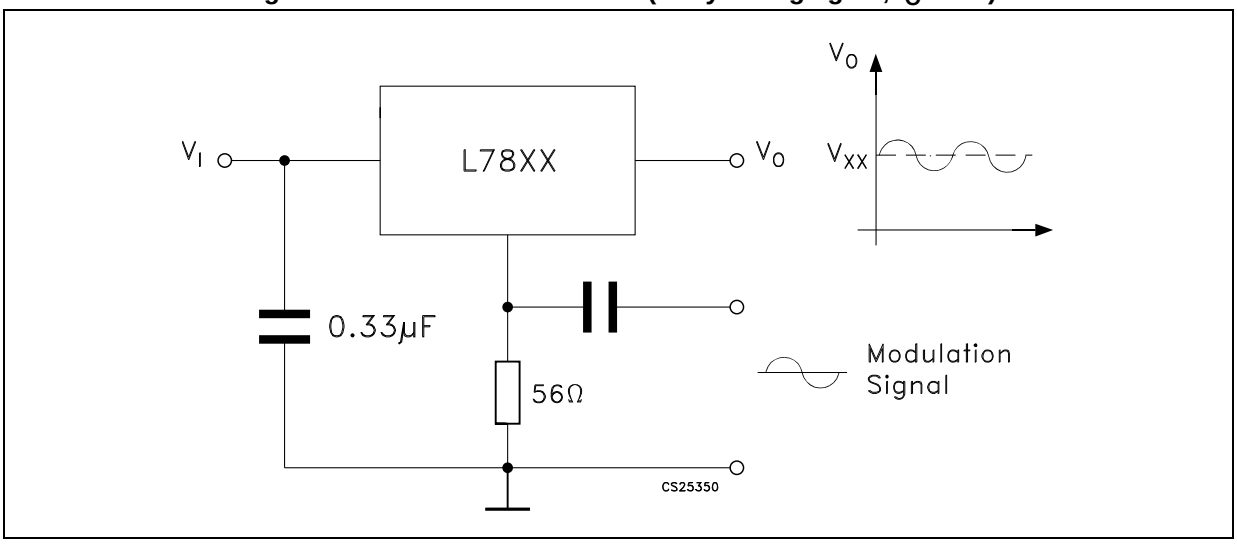

Note: The circuit performs well up to 100 kHz.

Figure 26. Adjustable output voltage with temperature compensation

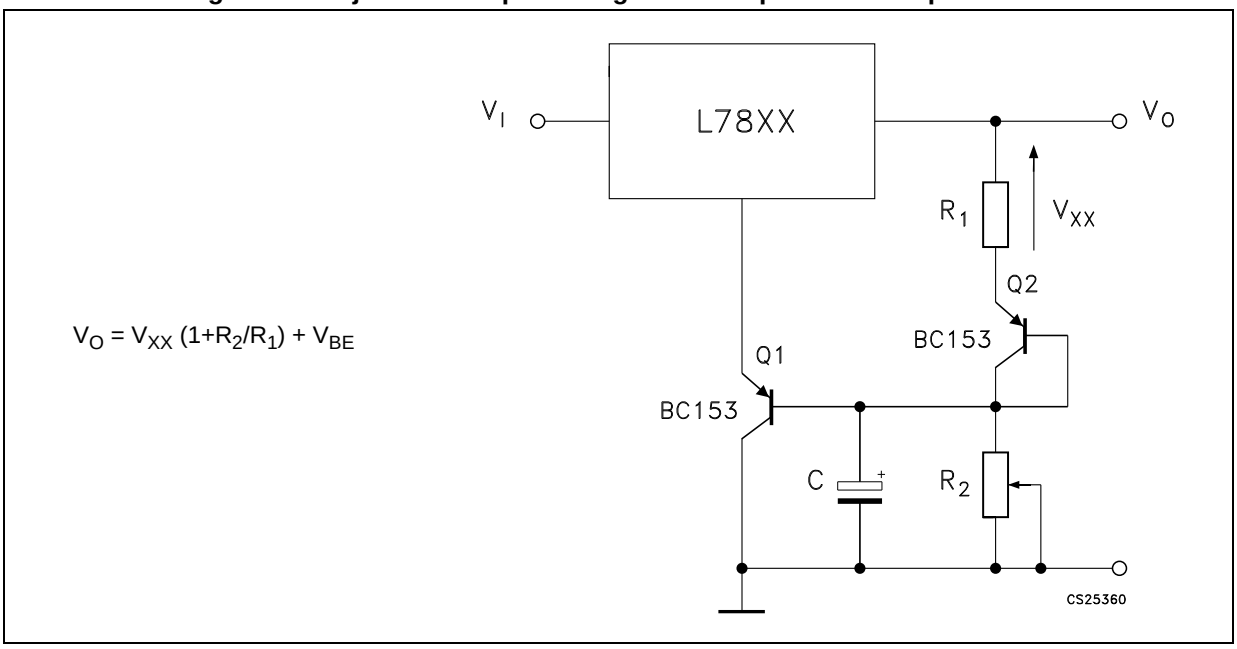

Note: Q_2 is connected as a diode in order to compensate the variation of the Q_1 V_{BE} with the temperature. C allows a slow rise time of the V_O.

Figure 27. Light controllers ($V_{O(min)} = V_{XX} + V_{BE}$)

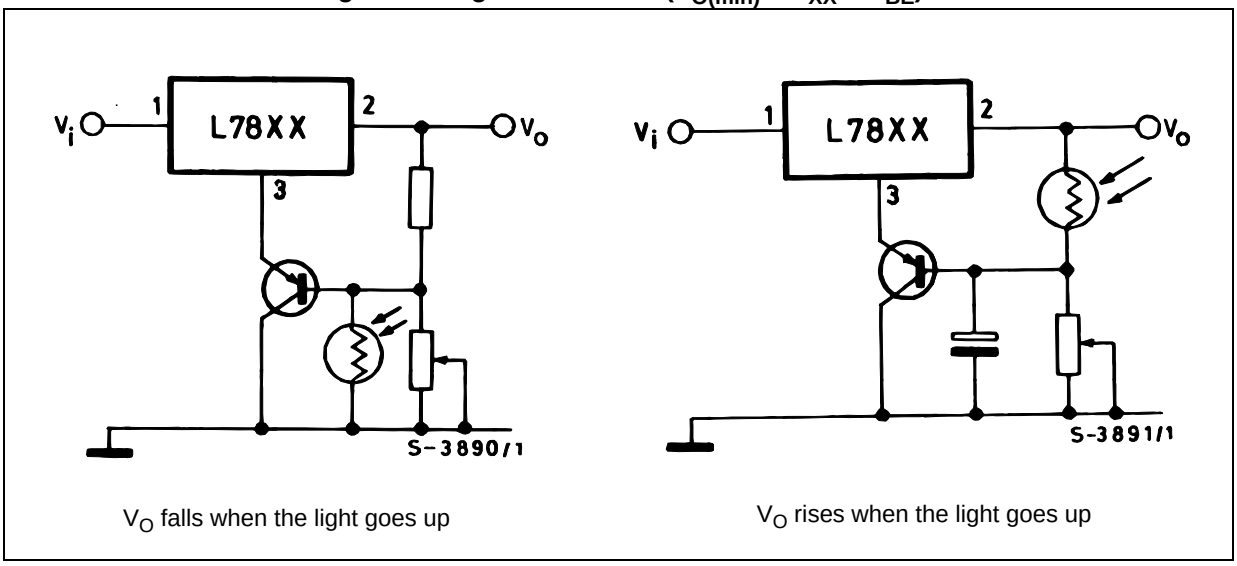

Figure 28. Protection against input short-circuit with high capacitance loads

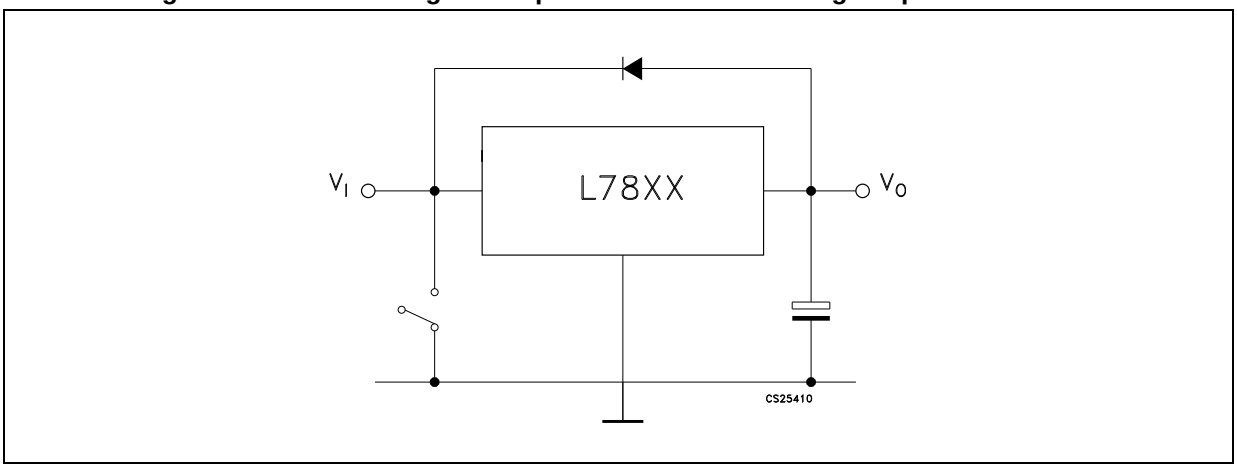

Note: Application with high capacitance loads and an output voltage greater than 6 volts need an external diode (see Figure 23 on page 34) to protect the device against input short circuit. In this case the input voltage falls rapidly while the output voltage decrease slowly. The capacitance discharges by means of the base-emitter junction of the series pass transistor in the regulator. If the energy is sufficiently high, the transistor may be destroyed. The external diode by-passes the current from the IC to ground.

7 Typical performance

Figure 29. Dropout voltage vs. junction temperature

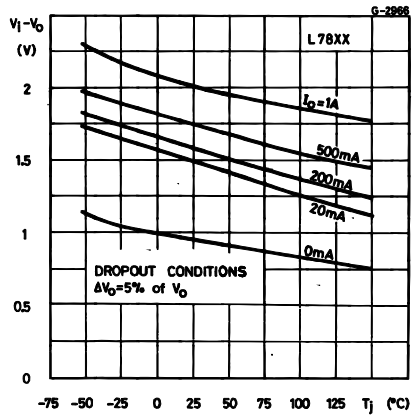

Figure 30. Peak output current vs. input/output differential voltage

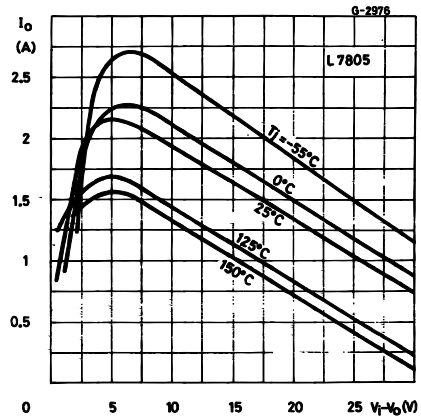

Figure 31. Supply voltage rejection vs. frequency

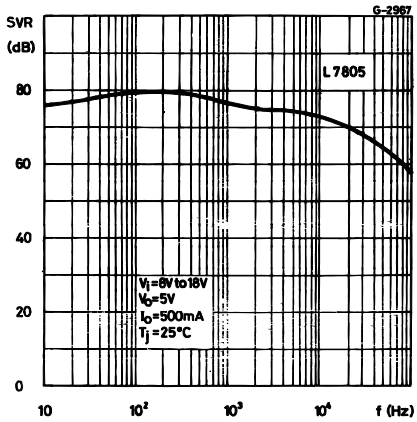

Figure 32. Output voltage vs. junction temperature

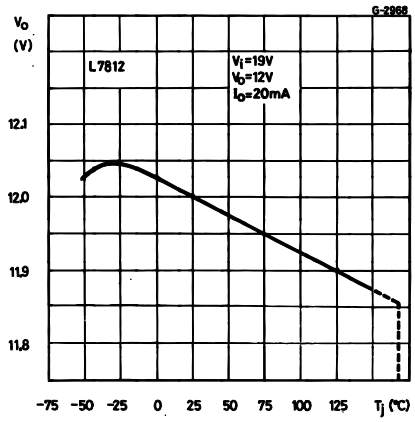

Figure 33. Output impedance vs. frequency

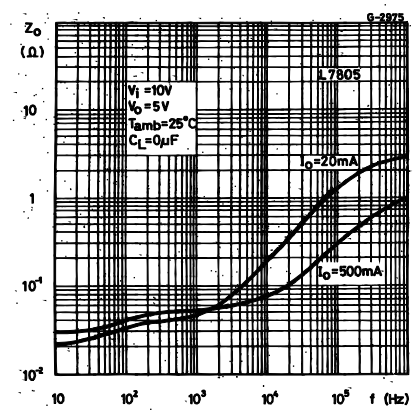

Figure 34. Quiescent current vs. junction temp.

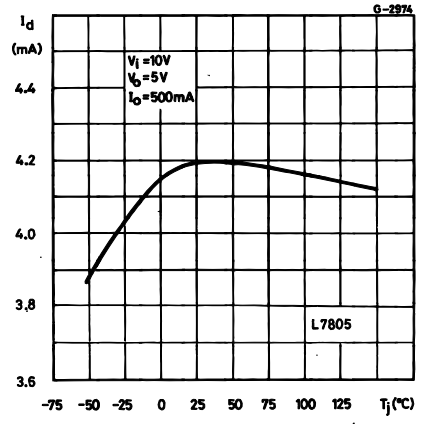

Figure 35. Load transient response

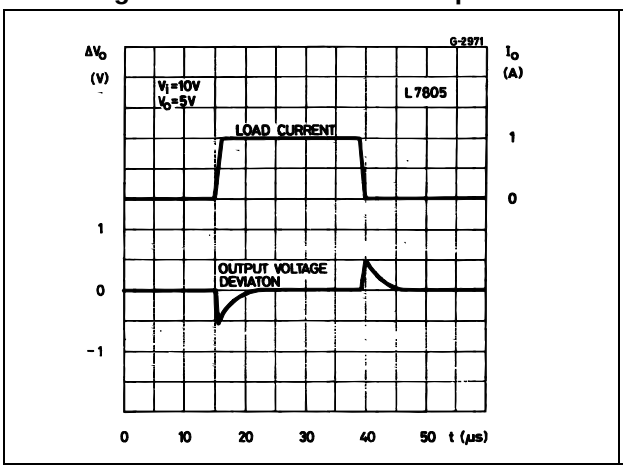

Figure 36. Line transient response

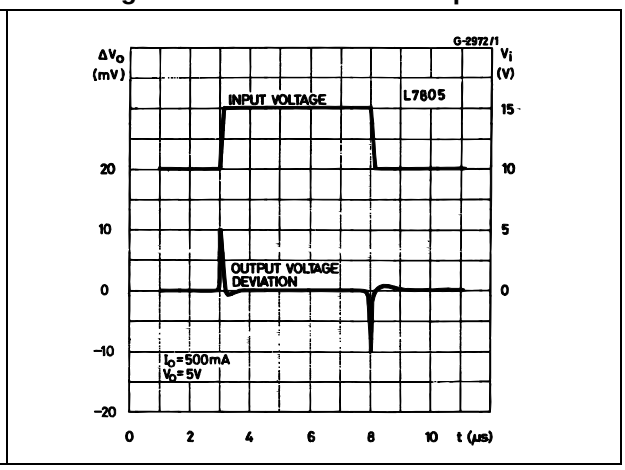

Figure 37. Quiescent current vs. input voltage

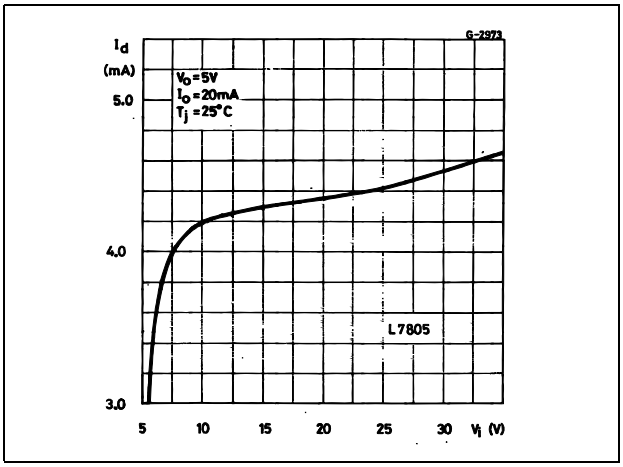

8 Package mechanical data

In order to meet environmental requirements, ST offers these devices in different grades of ECOPACK® packages, depending on their level of environmental compliance. ECOPACK® specifications, grade definitions and product status are available at: *www.st.com*. ECOPACK® is an ST trademark.

Table 23. TO-220 mechanical data

Dim.	Type STD - ST Dual Gauge			Type STD - ST Single Gauge		
	mm.			mm.		
	Min.	Typ.	Max.	Min.	Typ.	Max.
A	4.40		4.60	4.40		4.60
b	0.61		0.88	0.61		0.88
b1	1.14		1.70	1.14		1.70
c	0.48		0.70	0.48		0.70
D	15.25		15.75	15.25		15.75
D1		1.27				
E	10.00		10.40	10.00		10.40
e	2.40		2.70	2.40		2.70
e1	4.95		5.15	4.95		5.15
F	1.23		1.32	0.51		0.60
H1	6.20		6.60	6.20		6.60
J1	2.40		2.72	2.40		2.72
L	13.00		14.00	13.00		14.00
L1	3.50		3.93	3.50		3.93
L20		16.40			16.40	
L30		28.90			28.90	
∅P	3.75		3.85	3.75		3.85
Q	2.65		2.95	2.65		2.95

In spite of some difference in tolerances, the packages are compatible.

Figure 38. Drawing dimension TO-220 (type STD-ST Dual Gauge)

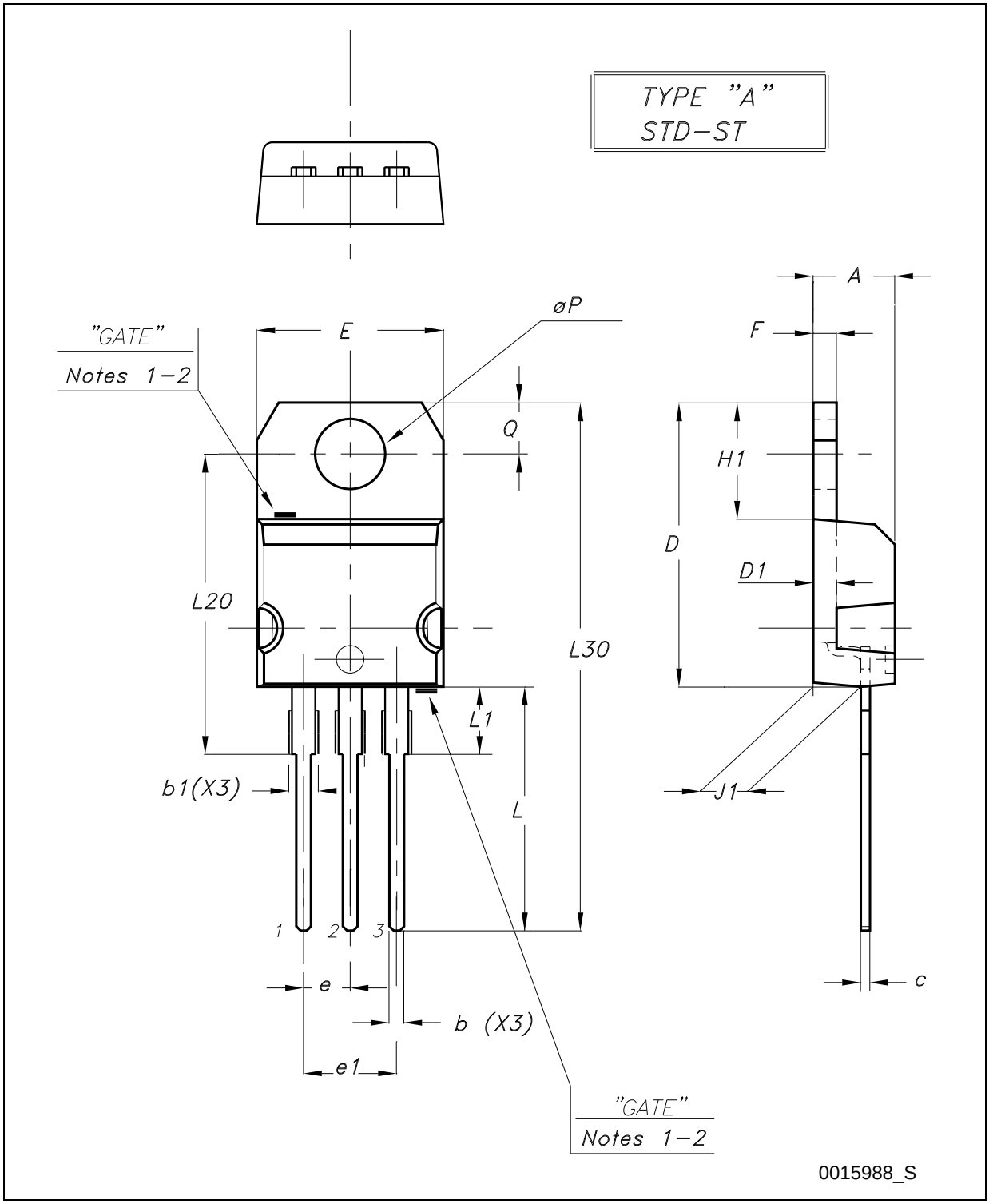

Note: 1 Maximum resin gate protrusion: 0.5 mm.

2 Resin gate position is accepted in each of the two positions shown on the drawing, or their symmetrical.

Figure 39. Drawing dimension TO-220 (type STD-ST Single Gauge)

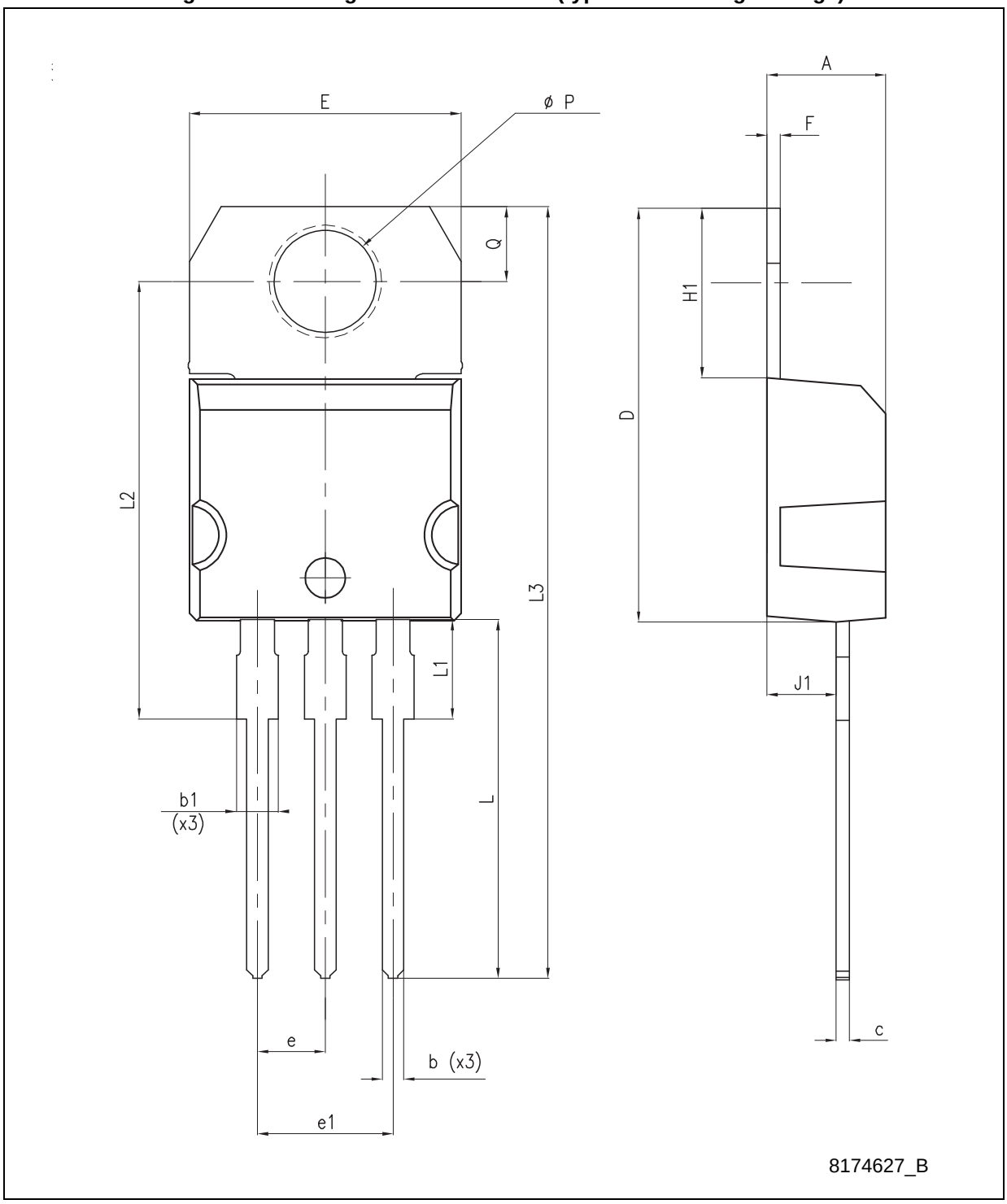

Figure 40. Drawing dimension tube for TO-220 Dual Gauge (mm.)

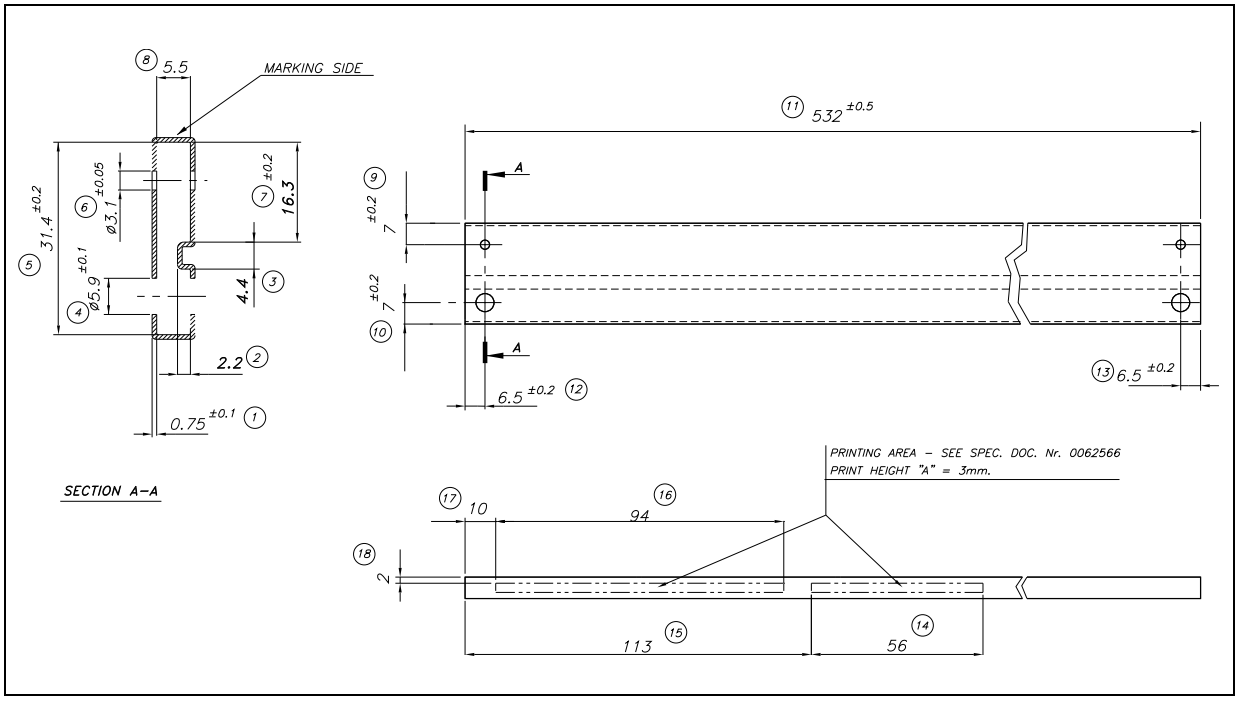

Figure 41. Drawing dimension tube for TO-220 Single Gauge (mm.)

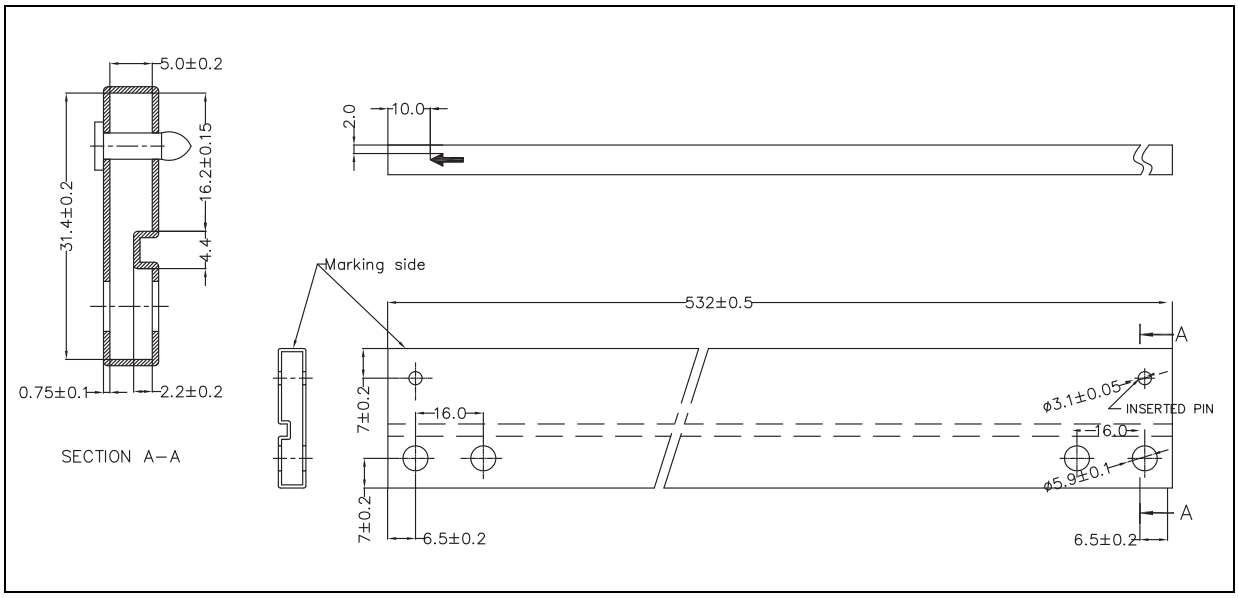

Figure 42. Drawing dimension TO-220FP

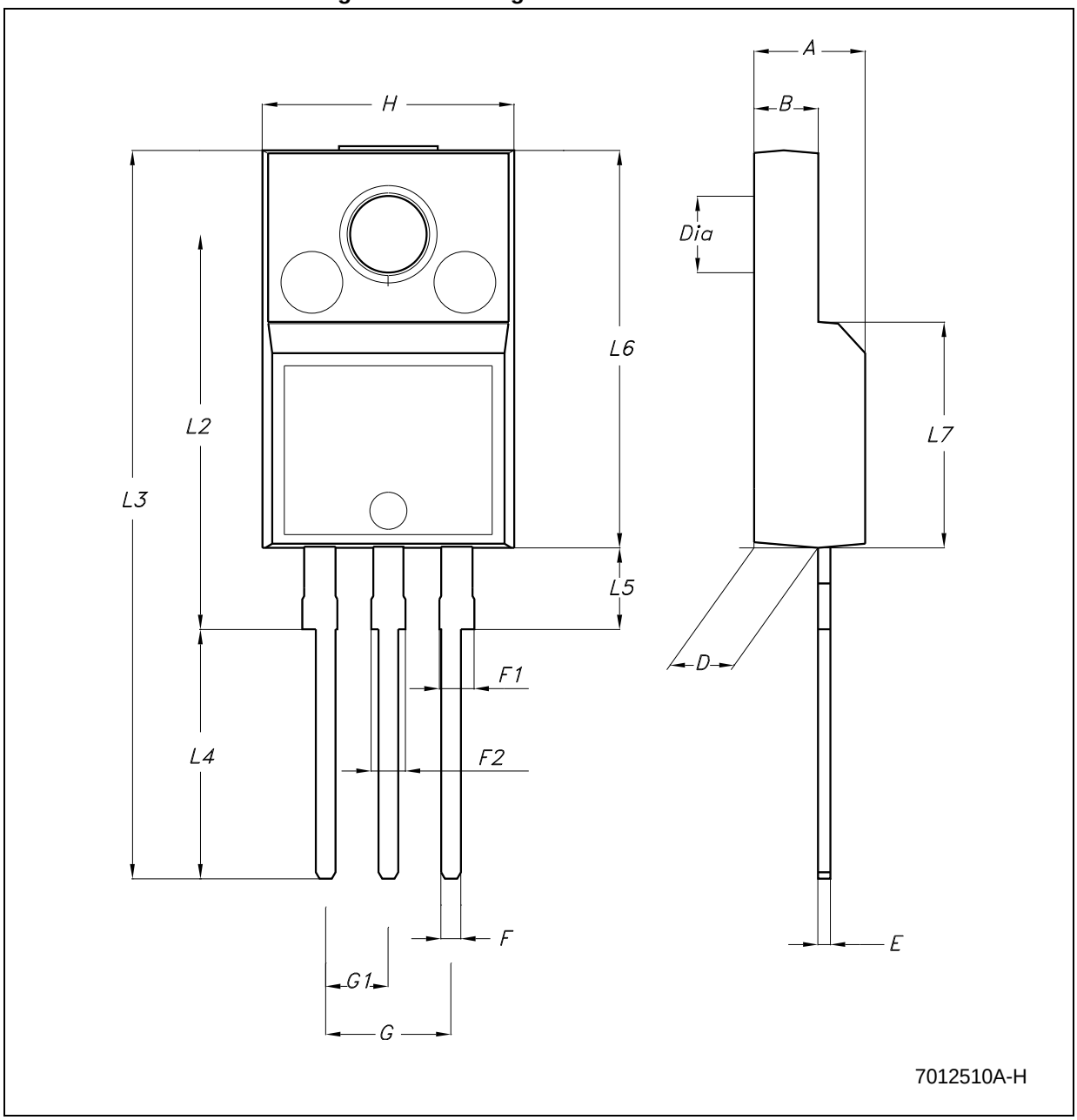

Table 24. TO-220FP mechanical data

Dim.	mm.			inch.		
	Min.	Typ.	Max.	Min.	Typ.	Max.
A	4.40		4.60	0.173		0.181
B	2.5		2.7	0.098		0.106
D	2.5		2.75	0.098		0.108
E	0.45		0.70	0.017		0.027
F	0.75		1	0.030		0.039
F1	1.15		1.50	0.045		0.059
F2	1.15		1.50	0.045		0.059
G	4.95		5.2	0.194		0.204
G1	2.4		2.7	0.094		0.106
H	10.0		10.40	0.393		0.409
L2		16			0.630	
L3	28.6		30.6	1.126		1.204
L4	9.8		10.6	0.385		0.417
L5	2.9		3.6	0.114		0.142
L6	15.9		16.4	0.626		0.645
L7	9		9.3	0.354		0.366
DIA.	3		3.2	0.118		0.126

Figure 43. Drawing dimension TO-3

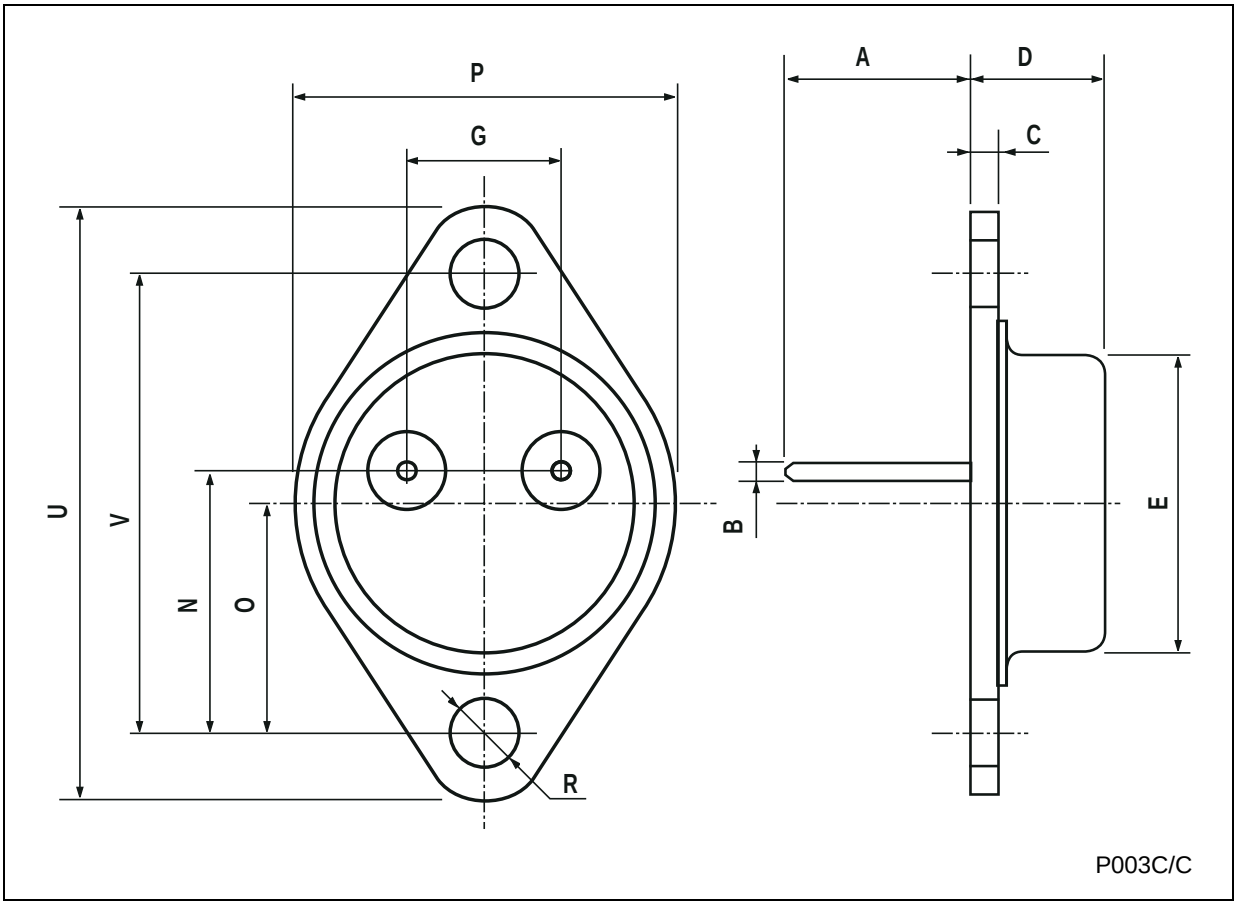

Table 25. TO-3 mechanical data

Dim.	mm.			inch.		
	Min.	Typ.	Max.	Min.	Typ.	Max.
A		11.85			0.466	
B	0.96	1.05	1.10	0.037	0.041	0.043
C			1.70			0.066
D			8.7			0.342
E			20.0			0.787
G		10.9			0.429	
N		16.9			0.665	
P			26.2			1.031
R	3.88		4.09	0.152		0.161
U			39.5			1.555
V		30.10			1.185	

Figure 44. Drawing dimension DPAK

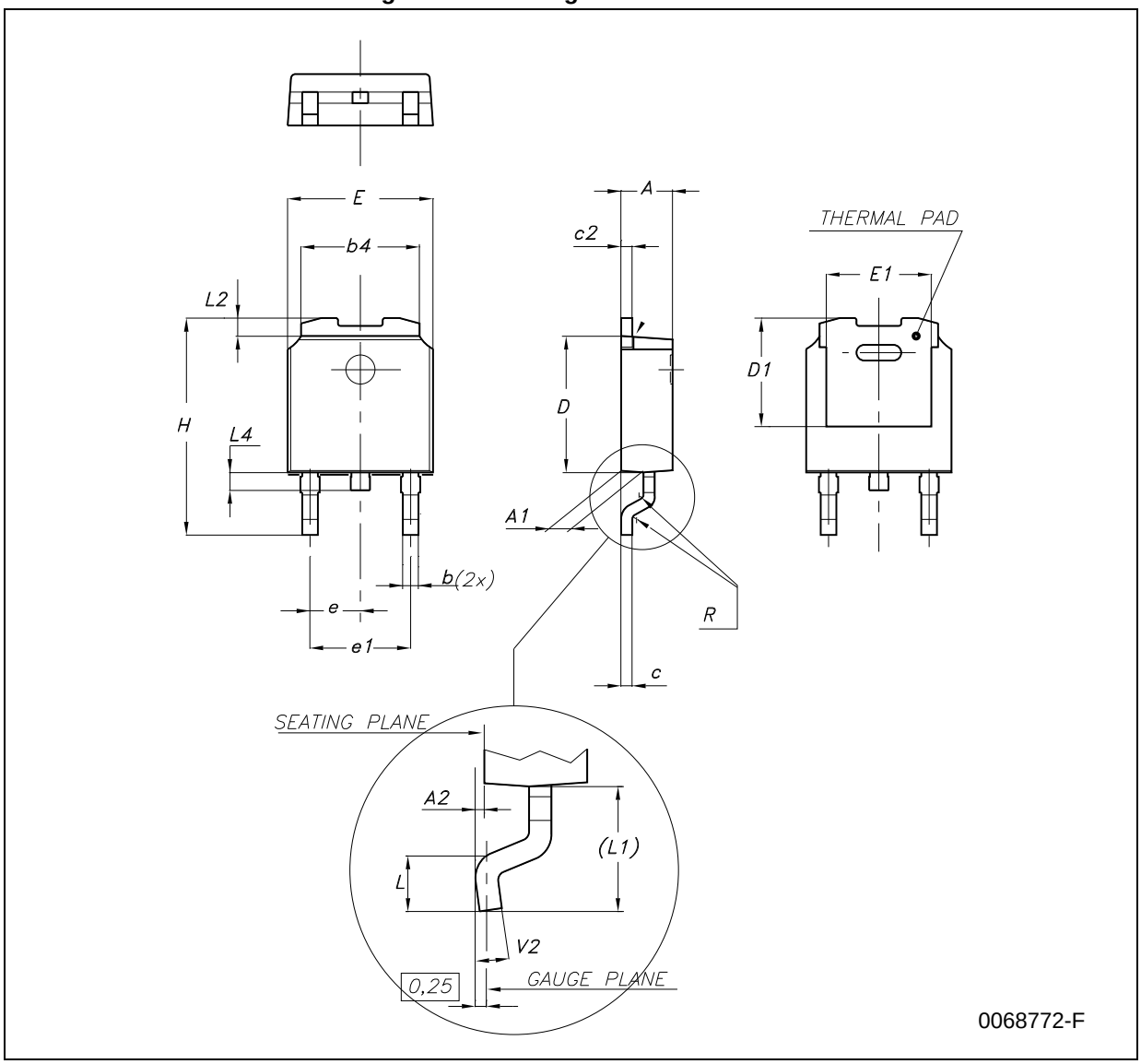

Table 26. DPAK mechanical data

Dim.	mm.			inch.		
	Min.	Typ.	Max.	Min.	Typ.	Max.
A	2.2		2.4	0.086		0.094
A1	0.9		1.1	0.035		0.043
A2	0.03		0.23	0.001		0.009
B	0.64		0.9	0.025		0.035
b4	5.2		5.4	0.204		0.212
C	0.45		0.6	0.017		0.023
C2	0.48		0.6	0.019		0.023
D	6		6.2	0.236		0.244
D1		5.1			0.200	
E	6.4		6.6	0.252		0.260
E1		4.7			0.185	
e		2.28			0.090	
e1	4.4		4.6	0.173		0.181
H	9.35		10.1	0.368		0.397
L	1			0.039		
(L1)		2.8			0.110	
L2		0.8			0.031	
L4	0.6		1	0.023		0.039
R		0.2			0.008	
V2	0°		8°	0°		8°

Figure 45. Drawing dimension tape and reel for DPAK

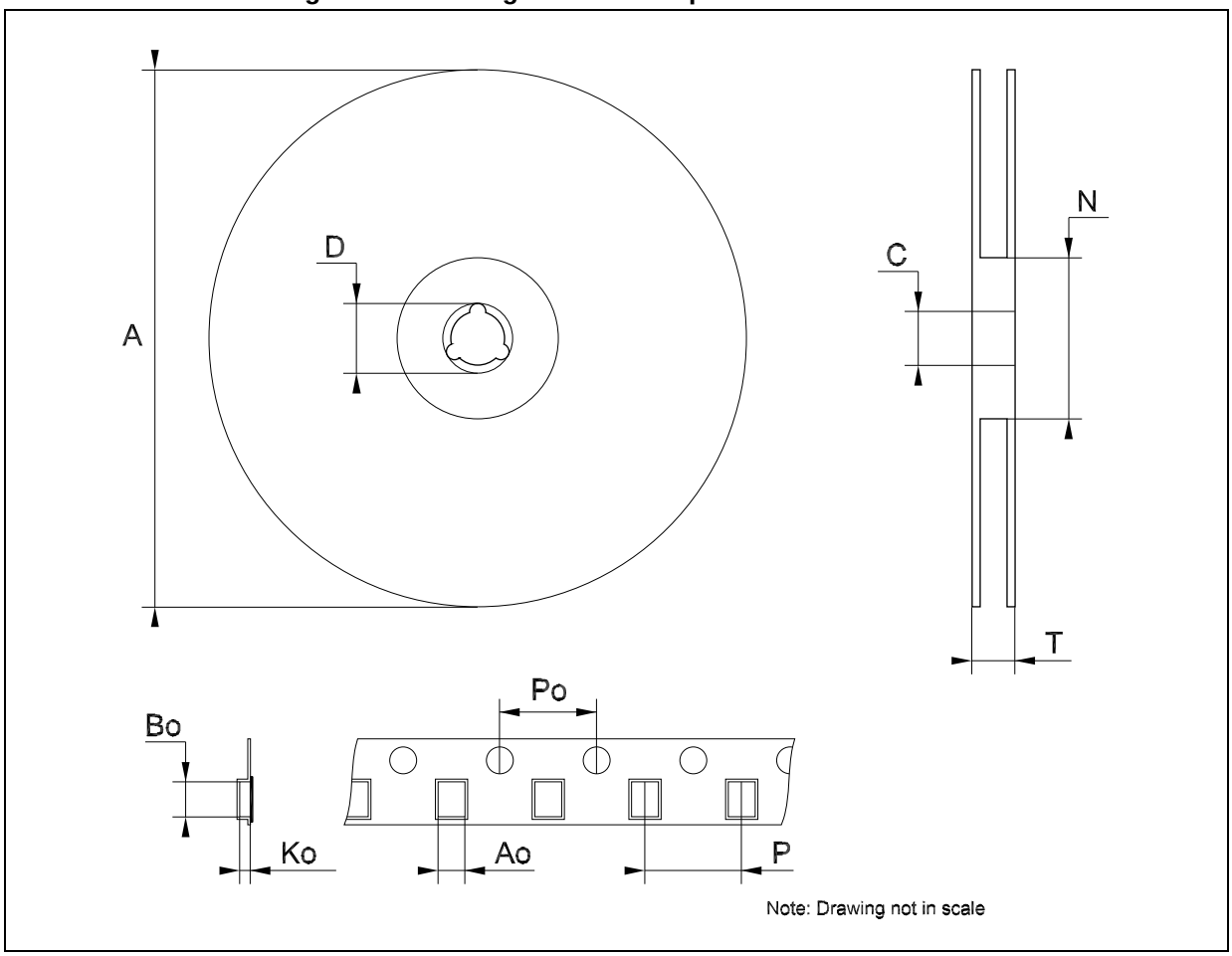

Table 27. Tape and reel DPAK mechanical data

Dim.	mm.			inch.		
	Min.	Typ.	Max.	Min.	Typ.	Max.
A			330			12.992
C	12.8	13.0	13.2	0.504	0.512	0.519
D	20.2			0.795		
N	60			2.362		
T			22.4			0.882
Ao	6.80	6.90	7.00	0.268	0.272	0.2.76
Bo	10.40	10.50	10.60	0.409	0.413	0.417
Ko	2.55	2.65	2.75	0.100	0.104	0.105
Po	3.9	4.0	4.1	0.153	0.157	0.161
P	7.9	8.0	8.1	0.311	0.315	0.319

Figure 46. Drawing dimension D²PAK (type STD-ST)

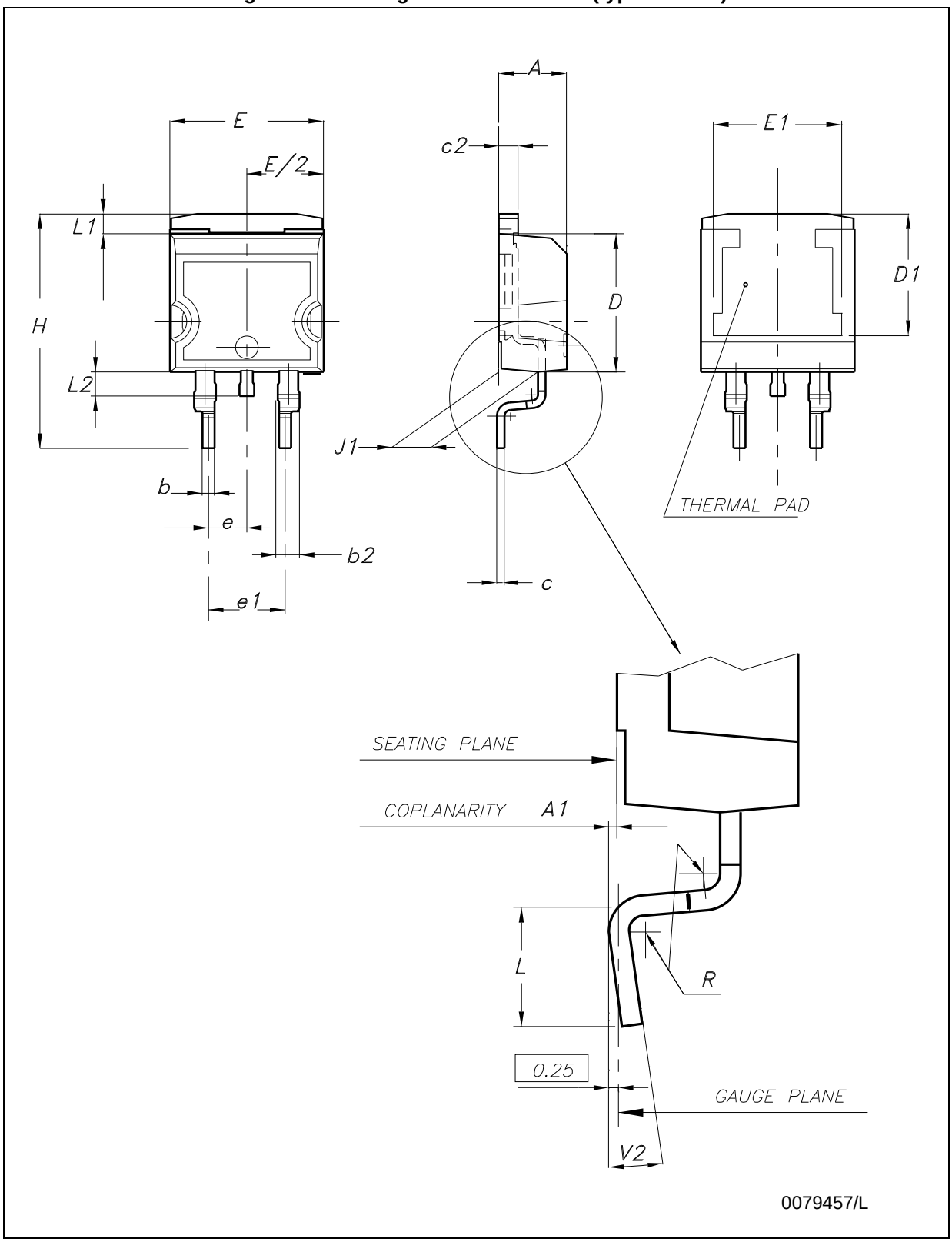

Figure 47. Drawing dimension D²PAK (type WOOSEOK-Subcon.)

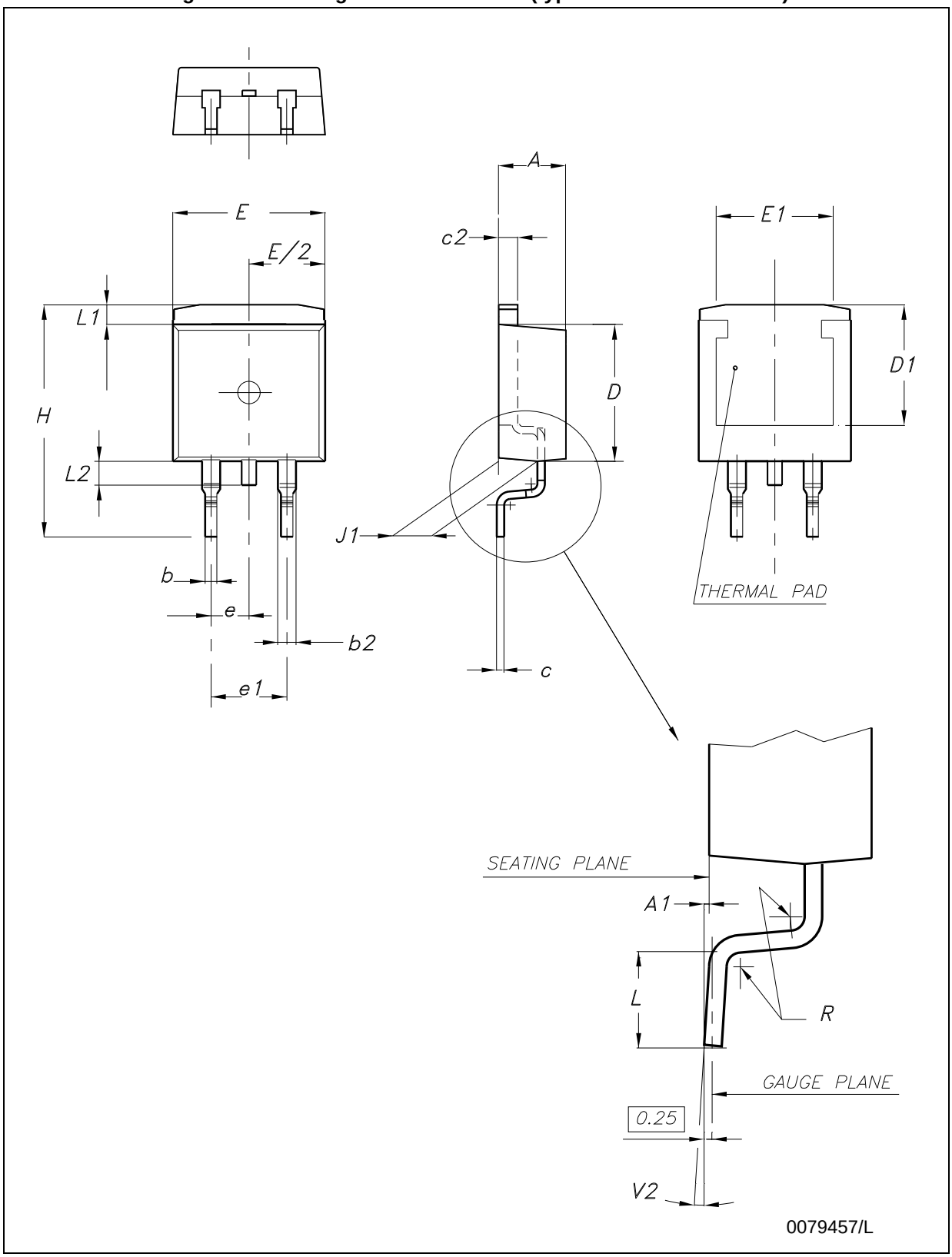

Table 28. D²PAK mechanical data

Dim.	Type STD-ST			Type WOOSEOK-Subcon.		
	mm.			mm.		
	Min.	Typ.	Max.	Min.	Typ.	Max.
A	4.40		4.60	4.30		4.70
A1	0.03		0.23	0		0.20
b	0.70		0.93	0.70		0.90
b2	1.14		1.70	1.17		1.37
c	0.45		0.60	0.45	0.50	0.60
c2	1.23		1.36	1.25	1.30	1.40
D	8.95		9.35	9	9.20	9.40
D1	7.50			7.50		
E	10		10.40	9.80		10.20
E1	8.50			7.50		
e		2.54			2.54	
e1	4.88		5.28		5.08	
H	15		15.85	15	15.30	15.60
J1	2.49		2.69	2.20		2.60
L	2.29		2.79	1.79		2.79
L1	1.27		1.40	1		1.40
L2	1.30		1.75	1.20		1.60
R		0.4			0.30	
V2	0°		8°	0°		3°

Note: The D²PAK package coming from the subcontractor Wooseok is fully compatible with the ST's package suggested footprint.

Figure 48. D²PAK footprint recommended data

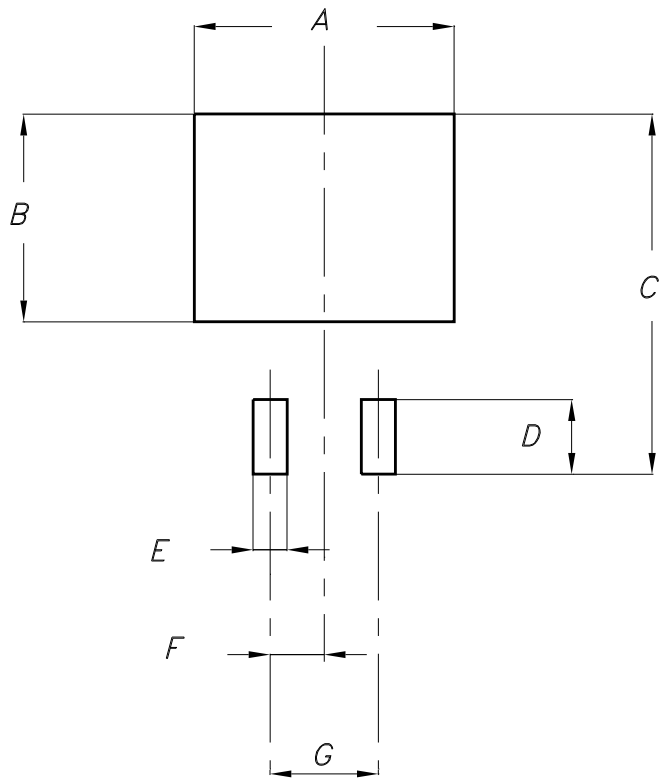

Table 29. D²PAK footprint data

Values		
Dim.	**mm.**	**inch.**
A	12.20	0.480
B	9.75	0.384
C	16.90	0.665
D	3.50	0.138
E	1.60	0.063
F	2.54	0.100
G	5.08	0.200

Table 30. Tape and reel D²PAK mechanical data

Dim.	mm.			inch.		
	Min.	Typ.	Max.	Min.	Typ.	Max.
A			180			7.086
C	12.8	13.0	13.2	0.504	0.512	0.519
D	20.2			0.795		
N	60			2.362		
T			14.4			0.567
Ao	10.50	10.6	10.70	0.413	0.417	0.421
Bo	15.70	15.80	15.90	0.618	0.622	0.626
Ko	4.80	4.90	5.00	0.189	0.193	0.197
Po	3.9	4.0	4.1	0.153	0.157	0.161
P	11.9	12.0	12.1	0.468	0.472	0.476

Figure 49. Drawing dimension tape and reel for D²PAK

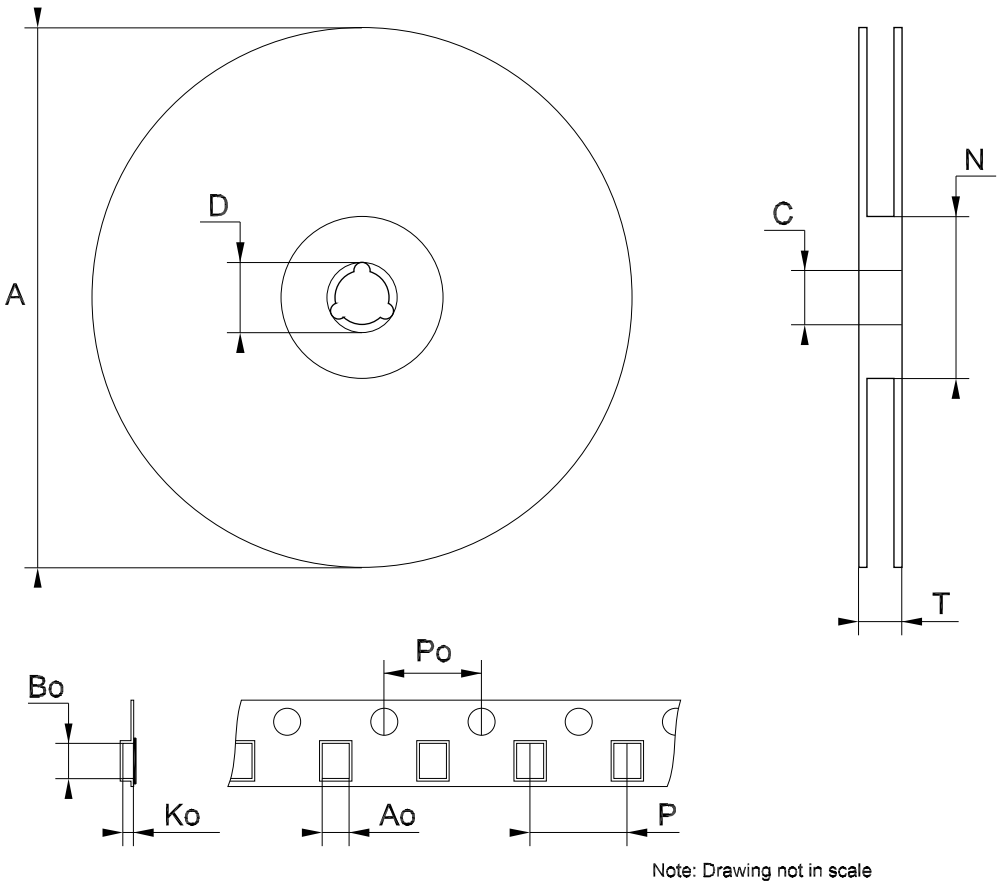

9 Order codes

Table 31. Order codes

Part numbers	Order codes					
	TO-220	DPAK	D²PAK	TO-220FP	TO-3	Output voltages
L7805					L7805T	5 V
L7805C	L7805CV	L7805CDT-TR	L7805CD2T-TR	L7805CP	L7805CT	5 V
	L7805CV-DG (1)					5 V
L7805AB	L7805ABV		L7805ABD2T-TR	L7805ABP		5 V
	L7805ABV-DG (1)					5 V
L7805AC	L7805ACV		L7805ACD2T-TR	L7805ACP		5 V
	L7805ACV-DG (1)					5 V
L7806C	L7806CV		L7806CD2T-TR		L7806CT	6 V
	L7806CV-DG (1)					6 V
L7806AB	L7806ABV		L7806ABD2T-TR			6 V
	L7806ABV-DG (1)					6 V
L7806AC	L7806ACV					6 V
	L7806ACV-DG (1)					6 V
L7808C	L7808CV		L7808CD2T-TR			8 V
	L7808CV-DG (1)					8 V
L7808AB	L7808ABV		L7808ABD2T-TR			8 V
	L7808ABV-DG (1)					8 V
L7808AC	L7808ACV					8 V
	L7808ACV-DG (1)					8 V
L7885C	L7885CV		L7885CD2T-TR (2)	L7885CP (2)	L7885CT (2)	8.5 V
L7809C	L7809CV		L7809CD2T-TR	L7809CP		9 V
	L7809CV-DG (1)					9 V
L7809AB	L7809ABV		L7809ABD2T-TR			9 V
L7809AC	L7809ACV					9 V
L7812C	L7812CV		L7812CD2T-TR	L7812CP	L7812CT	12 V
	L7812CV-DG (1)					12 V
L7812AB	L7812ABV		L7812ABD2T-TR			12 V
	L7812ABV-DG (1)					12 V
L7812AC	L7812ACV		L7812ACD2T-TR			12 V
	L7812ACV-DG (1)					12 V

Table 31. Order codes

Part numbers	Order codes					
	TO-220	DPAK	D²PAK	TO-220FP	TO-3	Output voltages
L7815C	L7815CV		L7815CD2T-TR	L7815CP	L7815CT	15 V
	L7815CV-DG (1)					15 V
L7815AB	L7815ABV		L7815ABD2T-TR			15 V
	L7815ABV-DG (1)					15 V
L7815AC	L7815ACV		L7815ACD2T-TR			15 V
	L7815ACV-DG (1)					15 V
L7818C	L7818CV		L7818CD2T-TR (2)		L7818CT	18 V
	L7818CV-DG (1)					18 V
L7824C	L7824CV		L7824CD2T-TR	L7824CP	L7824CT	24 V
	L7824CV-DG (1)					24 V
L7824AB	L7824ABV					24 V
	L7824ABV-DG (1)					24 V
L7824AC	L7824ACV					24 V
	L7824ACV-DG (1)					24 V

1. TO-220 Dual Gauge frame.
2. Available on request.

10 Revision history

Table 32. Document revision history

Date	Revision	Changes
21-Jun-2004	12	Document updating.
03-Aug-2006	13	Order codes has been updated and new template.
19-Jan-2007	14	D²PAK mechanical data has been updated and add footprint data.
31-May-2007	15	Order codes has been updated.
29-Aug-2007	16	Added *Table 1* in cover page.
11-Dec-2007	17	Modified: *Table 31*.
06-Feb-2008	18	Added: TO-220 mechanical data *Figure 38 on page 40* , *Figure 39 on page 41*, and *Table 23 on page 39*. Modified: *Table 31 on page 54*.
18-Mar-2008	19	Added: *Table 26: DPAK mechanical data on page 47*, *Table 27: Tape and reel DPAK mechanical data on page 48*. Modified: *Table 31 on page 54*.
26-Jan-2010	20	Modified *Table 1 on page 1* and *Table 23 on page 39*, added: *Figure 38 on page 40* and *Figure 39 on page 41*, *Figure 40 on page 42* and *Figure 41 on page 42*.
04-Mar-2010	21	Added notes *Figure 38 on page 40*.
08-Sep-2010	22	Modified *Table 31 on page 54*.
23-Nov-2010	23	Added: T_J = 25 °C test condition in ΔV_O on *Table 5*, *6*, *7*, *8*, *9*, *10* and *Table 11*.
16-Sep-2011	24	Modified title on page 1.
30-Nov-2011	25	Added: order codes L7805CV-DG, L7806CV-DG, L7808ABV-DG, L7812CV-DG and L7815CV-DG *Table 31 on page 54*.
08-Feb-2012	26	Added: order codes L7805ACV-DG, L7805ABV-DG, L7806ABV-DG, L7808CV-DG, L7809CV-DG, L7812ACV-DG, L7818CV-DG, L7824CV-DG *Table 31 on page 54*.
27-Mar-2012	27	Added: order codes L7812ABV-DG, L7815ABV-DG *Table 31 on page 54*.
27-Apr-2012	28	Modified: V_I = 10.4 to 23 V ==> V_I = 11.4 to 23 V test conditon value Line regulation *Table 8 on page 13*.
10-May-2012	29	Added: order codes L7806ACV-DG, L7808ACV-DG, L7815ACV-DG, L7824ABV-DG and L7824ACV-DG *Table 31 on page 54*.
19-Sep-2012	30	Modified load regulation units from V to mV in *Table 5* to *Table 11*.
12-Mar-2013	31	Modified: V_O output voltage at 25 °C min. value 14.4 V *Table 19 on page 24*.

Please Read Carefully:

Information in this document is provided solely in connection with ST products. STMicroelectronics NV and its subsidiaries (“ST”) reserve the right to make changes, corrections, modifications or improvements, to this document, and the products and services described herein at any time, without notice.

All ST products are sold pursuant to ST’s terms and conditions of sale.

Purchasers are solely responsible for the choice, selection and use of the ST products and services described herein, and ST assumes no liability whatsoever relating to the choice, selection or use of the ST products and services described herein.

No license, express or implied, by estoppel or otherwise, to any intellectual property rights is granted under this document. If any part of this document refers to any third party products or services it shall not be deemed a license grant by ST for the use of such third party products or services, or any intellectual property contained therein or considered as a warranty covering the use in any manner whatsoever of such third party products or services or any intellectual property contained therein.

UNLESS OTHERWISE SET FORTH IN ST’S TERMS AND CONDITIONS OF SALE ST DISCLAIMS ANY EXPRESS OR IMPLIED WARRANTY WITH RESPECT TO THE USE AND/OR SALE OF ST PRODUCTS INCLUDING WITHOUT LIMITATION IMPLIED WARRANTIES OF MERCHANTABILITY, FITNESS FOR A PARTICULAR PURPOSE (AND THEIR EQUIVALENTS UNDER THE LAWS OF ANY JURISDICTION), OR INFRINGEMENT OF ANY PATENT, COPYRIGHT OR OTHER INTELLECTUAL PROPERTY RIGHT.

ST PRODUCTS ARE NOT AUTHORIZED FOR USE IN WEAPONS. NOR ARE ST PRODUCTS DESIGNED OR AUTHORIZED FOR USE IN: (A) SAFETY CRITICAL APPLICATIONS SUCH AS LIFE SUPPORTING, ACTIVE IMPLANTED DEVICES OR SYSTEMS WITH PRODUCT FUNCTIONAL SAFETY REQUIREMENTS; (B) AERONAUTIC APPLICATIONS; (C) AUTOMOTIVE APPLICATIONS OR ENVIRONMENTS, AND/OR (D) AEROSPACE APPLICATIONS OR ENVIRONMENTS. WHERE ST PRODUCTS ARE NOT DESIGNED FOR SUCH USE, THE PURCHASER SHALL USE PRODUCTS AT PURCHASER’S SOLE RISK, EVEN IF ST HAS BEEN INFORMED IN WRITING OF SUCH USAGE, UNLESS A PRODUCT IS EXPRESSLY DESIGNATED BY ST AS BEING INTENDED FOR “AUTOMOTIVE, AUTOMOTIVE SAFETY OR MEDICAL” INDUSTRY DOMAINS ACCORDING TO ST PRODUCT DESIGN SPECIFICATIONS. PRODUCTS FORMALLY ESCC, QML OR JAN QUALIFIED ARE DEEMED SUITABLE FOR USE IN AEROSPACE BY THE CORRESPONDING GOVERNMENTAL AGENCY.

Resale of ST products with provisions different from the statements and/or technical features set forth in this document shall immediately void any warranty granted by ST for the ST product or service described herein and shall not create or extend in any manner whatsoever, any liability of ST.

ST and the ST logo are trademarks or registered trademarks of ST in various countries.
Information in this document supersedes and replaces all information previously supplied.
The ST logo is a registered trademark of STMicroelectronics. All other names are the property of their respective owners.

© 2013 STMicroelectronics - All rights reserved

STMicroelectronics group of companies

Australia - Belgium - Brazil - Canada - China - Czech Republic - Finland - France - Germany - Hong Kong - India - Israel - Italy - Japan - Malaysia - Malta - Morocco - Philippines - Singapore - Spain - Sweden - Switzerland - United Kingdom - United States of America

www.st.com

Общество с ограниченной ответственностью «МосЧип» ИНН 7719860671 / КПП 771901001
Адрес: 105318, г.Москва, ул.Щербаковская д.3, офис 1107

Данный компонент на территории Российской Федерации

Вы можете приобрести в компании MosChip.

Для оперативного оформления запроса Вам необходимо перейти по данной ссылке:

http://moschip.ru/get-element

Вы можете разместить у нас заказ для любого Вашего проекта, будь то серийное производство или разработка единичного прибора.

В нашем ассортименте представлены ведущие мировые производители активных и пассивных электронных компонентов.

Нашей специализацией является поставка электронной компонентной базы двойного назначения, продукции таких производителей как XILINX, Intel (ex.ALTERA), Vicor, Microchip, Texas Instruments, Analog Devices, Mini-Circuits, Amphenol, Glenair.

Сотрудничество с глобальными дистрибьюторами электронных компонентов, предоставляет возможность заказывать и получать с международных складов практически любой перечень компонентов в оптимальные для Вас сроки.

На всех этапах разработки и производства наши партнеры могут получить квалифицированную поддержку опытных инженеров.

Система менеджмента качества компании отвечает требованиям в соответствии с ГОСТ Р ИСО 9001, ГОСТ РВ 0015-002 и ЭС РД 009

Офис по работе с юридическими лицами:

105318, г.Москва, ул.Щербаковская д.3, офис 1107, 1118, ДЦ «Щербаковский»

Телефон: +7 495 668-12-70 (многоканальный)

Факс: +7 495 668-12-70 (доб.304)

E-mail: info@moschip.ru

Skype отдела продаж:
moschip.ru
moschip.ru_4
moschip.ru_6
moschip.ru_9