PCIxx12 Single Socket CardBus Controller with Integrated 1394a-2000 OHCI Two-Port PHY/Link-Layer Controller

Data Manual

Includes: PCI4512GHK, PCI4512ZHK, PCI6412GHK, PCI6412ZHK, PCI6612GHK, PCI6612ZHK, PCI7402GHK, PCI7402ZHK, PCI7412GHK, PCI7412ZHK, PCI7612GHK, PCI7612ZHK, PCI8402GHK, PCI8402ZHK, PCI8412GHK, PCI8412ZHK

Literature Number: SCPS110
September 2005

PRINTED WITH SOY INK™

TEXAS INSTRUMENTS

Printed on Recycled Paper

IMPORTANT NOTICE

Texas Instruments Incorporated and its subsidiaries (TI) reserve the right to make corrections, modifications, enhancements, improvements, and other changes to its products and services at any time and to discontinue any product or service without notice. Customers should obtain the latest relevant information before placing orders and should verify that such information is current and complete. All products are sold subject to TI's terms and conditions of sale supplied at the time of order acknowledgment.

TI warrants performance of its hardware products to the specifications applicable at the time of sale in accordance with TI's standard warranty. Testing and other quality control techniques are used to the extent TI deems necessary to support this warranty. Except where mandated by government requirements, testing of all parameters of each product is not necessarily performed.

TI assumes no liability for applications assistance or customer product design. Customers are responsible for their products and applications using TI components. To minimize the risks associated with customer products and applications, customers should provide adequate design and operating safeguards.

TI does not warrant or represent that any license, either express or implied, is granted under any TI patent right, copyright, mask work right, or other TI intellectual property right relating to any combination, machine, or process in which TI products or services are used. Information published by TI regarding third-party products or services does not constitute a license from TI to use such products or services or a warranty or endorsement thereof. Use of such information may require a license from a third party under the patents or other intellectual property of the third party, or a license from TI under the patents or other intellectual property of TI.

Reproduction of information in TI data books or data sheets is permissible only if reproduction is without alteration and is accompanied by all associated warranties, conditions, limitations, and notices. Reproduction of this information with alteration is an unfair and deceptive business practice. TI is not responsible or liable for such altered documentation.

Resale of TI products or services with statements different from or beyond the parameters stated by TI for that product or service voids all express and any implied warranties for the associated TI product or service and is an unfair and deceptive business practice. TI is not responsible or liable for any such statements.

Following are URLs where you can obtain information on other Texas Instruments products and application solutions:

Products		**Applications**	
Amplifiers	amplifier.ti.com	Audio	www.ti.com/audio
Data Converters	dataconverter.ti.com	Automotive	www.ti.com/automotive
DSP	dsp.ti.com	Broadband	www.ti.com/broadband
Interface	interface.ti.com	Digital Control	www.ti.com/digitalcontrol
Logic	logic.ti.com	Military	www.ti.com/military
Power Mgmt	power.ti.com	Optical Networking	www.ti.com/opticalnetwork
Microcontrollers	microcontroller.ti.com	Security	www.ti.com/security
		Telephony	www.ti.com/telephony
		Video & Imaging	www.ti.com/video
		Wireless	www.ti.com/wireless

Mailing Address: Texas Instruments
Post Office Box 655303 Dallas, Texas 75265

Copyright © 2005, Texas Instruments Incorporated

Contents

Section		Page
1	**PCIxx12 Features**	**1**
2	**Introduction**	**3**
2.1	Controller Functional Description	4
2.1.1	PCI4512 Controller	4
2.1.2	PCI6412 Controller	4
2.1.3	PCI6612 Controller	5
2.1.4	PCI7402 Controller	5
2.1.5	PCI7412 Controller	6
2.1.6	PCI7612 Controller	6
2.1.7	PCI8402 Controller	7
2.1.8	PCI8412 Controller	7
2.1.9	Multifunctional Terminals	8
2.1.10	PCI Bus Power Management	8
2.1.11	Power Switch Interface	8
2.2	Related Documents	8
2.3	Trademarks	9
2.4	Document Conventions	9
2.5	Terms and Definitions	10
2.6	Ordering Information	11
2.7	PCIxx12 Data Manual Document History	11
2.8	Terminal Assignments	11
2.9	Detailed Terminal Descriptions	28
3	**Principles of Operation**	**43**
3.1	Power Supply Sequencing	43
3.2	I/O Characteristics	44
3.3	Clamping Voltages	44
3.4	Peripheral Component Interconnect (PCI) Interface	44
3.4.1	1394 PCI Bus Master	44
3.4.2	Device Resets	45
3.4.3	Serial EEPROM I^2C Bus	45
3.4.4	Function 0 (CardBus) Subsystem Identification	46
3.4.5	Function 1 (OHCI 1394) Subsystem Identification	47
3.4.6	Function 2 (Flash Media) Subsystem Identification	47
3.4.7	Function 3 (SD Host) Subsystem Identification	47
3.4.8	Function 4 (Smart Card) Subsystem Identification	47
3.5	PC Card Applications	47
3.5.1	PC Card Insertion/Removal and Recognition	48
3.5.2	Low Voltage CardBus Card Detection	48
3.5.3	PC Card Detection	48
3.5.4	Flash Media and Smart Card Detection	49
3.5.5	Power Switch Interface	50
3.5.6	Internal Ring Oscillator	51
3.5.7	Integrated Pullup Resistors for PC Card Interface	51
3.5.8	SPKROUT and CAUDPWM Usage	51
3.5.9	LED Socket Activity Indicators	51
3.5.10	CardBus Socket Registers	52
3.5.11	48-MHz Clock Requirements	52

Section Page

3.6 Serial EEPROM Interface 53
3.6.1 Serial-Bus Interface Implementation 53
3.6.2 Accessing Serial-Bus Devices Through Software 53
3.6.3 Serial-Bus Interface Protocol 53
3.6.4 Serial-Bus EEPROM Application 55
3.7 Programmable Interrupt Subsystem 58
3.7.1 PC Card Functional and Card Status Change Interrupts 58
3.7.2 Interrupt Masks and Flags 60
3.7.3 Using Parallel IRQ Interrupts 60
3.7.4 Using Parallel PCI Interrupts 61
3.7.5 Using Serialized IRQSER Interrupts 61
3.7.6 SMI Support in the PCIxx12 Controller 62
3.8 Power-Management Overview 62
3.8.1 1394 Power Management (Function 1) 63
3.8.2 Integrated Low-Dropout Voltage Regulator (LDO-VR) 63
3.8.3 Clock Run Protocol 64
3.8.4 CardBus PC Card Power Management 64
3.8.5 16-Bit PC Card Power Management 65
3.8.6 Suspend Mode 65
3.8.7 Requirements for Suspend Mode 66
3.8.8 Ring Indicate 66
3.8.9 PCI Power Management 67
3.8.10 CardBus Bridge Power Management 68
3.8.11 ACPI Support 69
3.8.12 Master List of PME Context Bits and Global Reset-Only Bits 69
3.9 IEEE 1394 Application Information 72
3.9.1 PHY Port Cable Connection 72
3.9.2 Crystal Selection 73
3.9.3 Bus Reset 74
4 PC Card Controller Programming Model 76
4.1 PCI Configuration Register Map (Function 0) 76
4.2 Vendor ID Register 77
4.3 Device ID Register Function 0 77
4.4 Command Register 78
4.5 Status Register 79
4.6 Revision ID Register 80
4.7 Class Code Register 80
4.8 Cache Line Size Register 80
4.9 Latency Timer Register 80
4.10 Header Type Register 81
4.11 BIST Register 81
4.12 CardBus Socket Registers/ExCA Base Address Register 81
4.13 Capability Pointer Register 81
4.14 Secondary Status Register 82
4.15 PCI Bus Number Register 82
4.16 CardBus Bus Number Register 83
4.17 Subordinate Bus Number Register 83
4.18 CardBus Latency Timer Register 83

4.19 CardBus Memory Base Registers 0, 1 84
4.20 CardBus Memory Limit Registers 0, 1 84
4.21 CardBus I/O Base Registers 0, 1 85
4.22 CardBus I/O Limit Registers 0, 1 85
4.23 Interrupt Line Register 86
4.24 Interrupt Pin Register 86
4.25 Bridge Control Register 87
4.26 Subsystem Vendor ID Register 88
4.27 Subsystem ID Register 88
4.28 PC Card 16-Bit I/F Legacy-Mode Base-Address Register 88
4.29 System Control Register 89
4.30 General Control Register 91
4.31 General-Purpose Event Status Register 93
4.32 General-Purpose Event Enable Register 93
4.33 General-Purpose Input Register 94
4.34 General-Purpose Output Register 94
4.35 Multifunction Routing Status Register 95
4.36 Retry Status Register 96
4.37 Card Control Register 97
4.38 Device Control Register 98
4.39 Diagnostic Register 99
4.40 Capability ID Register 99
4.41 Next Item Pointer Register 99
4.42 Power Management Capabilities Register 100
4.43 Power Management Control/Status Register 101
4.44 Power Management Control/Status Bridge Support Extensions Register 102
4.45 Power-Management Data Register 102
4.46 Serial Bus Data Register 103
4.47 Serial Bus Index Register 103
4.48 Serial Bus Slave Address Register 104
4.49 Serial Bus Control/Status Register 104
5 ExCA Compatibilty Registers (Function 0) 106
5.1 ExCA Identification and Revision Register 110
5.2 ExCA Interface Status Register 111
5.3 ExCA Power Control Register 112
5.4 ExCA Interrupt and General Control Register 113
5.5 ExCA Card Status-Change Register 114
5.6 ExCA Card Status-Change Interrupt Configuration Register 115
5.7 ExCA Address Window Enable Register 116
5.8 ExCA I/O Window Control Register 117
5.9 ExCA I/O Windows 0 and 1 Start-Address Low-Byte Registers 118
5.10 ExCA I/O Windows 0 and 1 Start-Address High-Byte Registers 118
5.11 ExCA I/O Windows 0 and 1 End-Address Low-Byte Registers 118
5.12 ExCA I/O Windows 0 and 1 End-Address High-Byte Registers 119
5.13 ExCA Memory Windows 0−4 Start-Address Low-Byte Registers 119
5.14 ExCA Memory Windows 0−4 Start-Address High-Byte Registers 120
5.15 ExCA Memory Windows 0−4 End-Address Low-Byte Registers 120
5.16 ExCA Memory Windows 0−4 End-Address High-Byte Registers 121

Section Page

5.17 ExCA Memory Windows 0−4 Offset-Address Low-Byte Registers 121
5.18 ExCA Memory Windows 0−4 Offset-Address High-Byte Registers 122
5.19 ExCA Card Detect and General Control Register 123
5.20 ExCA Global Control Register 124
5.21 ExCA I/O Windows 0 and 1 Offset-Address Low-Byte Registers 124
5.22 ExCA I/O Windows 0 and 1 Offset-Address High-Byte Registers 125
5.23 ExCA Memory Windows 0−4 Page Registers 125
6 CardBus Socket Registers (Function 0) 126
6.1 Socket Event Register 127
6.2 Socket Mask Register 128
6.3 Socket Present State Register 129
6.4 Socket Force Event Register 131
6.5 Socket Control Register 132
6.6 Socket Power Management Register 133
7 OHCI Controller Programming Model 134
7.1 Vendor ID Register 135
7.2 Device ID Register 135
7.3 Command Register 136
7.4 Status Register 137
7.5 Class Code and Revision ID Register 138
7.6 Latency Timer and Class Cache Line Size Register 138
7.7 Header Type and BIST Register 139
7.8 OHCI Base Address Register 139
7.9 TI Extension Base Address Register 140
7.10 CardBus CIS Base Address Register 140
7.11 CardBus CIS Pointer Register 141
7.12 Subsystem Identification Register 141
7.13 Power Management Capabilities Pointer Register 141
7.14 Interrupt Line Register 142
7.15 Interrupt Pin Register 142
7.16 Minimum Grant and Maximum Latency Register 143
7.17 OHCI Control Register 143
7.18 Capability ID and Next Item Pointer Registers 144
7.19 Power Management Capabilities Register 145
7.20 Power Management Control and Status Register 146
7.21 Power Management Extension Registers 146
7.22 PCI PHY Control Register 147
7.23 PCI Miscellaneous Configuration Register 148
7.24 Link Enhancement Control Register 149
7.25 Subsystem Access Register 150
7.26 GPIO Control Register 151
8 OHCI Registers 153
8.1 OHCI Version Register 156
8.2 GUID ROM Register 156
8.3 Asynchronous Transmit Retries Register 157
8.4 CSR Data Register 157
8.5 CSR Compare Register 158
8.6 CSR Control Register 158

8.7 Configuration ROM Header Register 159
8.8 Bus Identification Register 159
8.9 Bus Options Register 160
8.10 GUID High Register 161
8.11 GUID Low Register 161
8.12 Configuration ROM Mapping Register 161
8.13 Posted Write Address Low Register 162
8.14 Posted Write Address High Register 162
8.15 Vendor ID Register 162
8.16 Host Controller Control Register 163
8.17 Self-ID Buffer Pointer Register 164
8.18 Self-ID Count Register 165
8.19 Isochronous Receive Channel Mask High Register 166
8.20 Isochronous Receive Channel Mask Low Register 167
8.21 Interrupt Event Register 168
8.22 Interrupt Mask Register 170
8.23 Isochronous Transmit Interrupt Event Register 172
8.24 Isochronous Transmit Interrupt Mask Register 172
8.25 Isochronous Receive Interrupt Event Register 173
8.26 Isochronous Receive Interrupt Mask Register 173
8.27 Initial Bandwidth Available Register 174
8.28 Initial Channels Available High Register 174
8.29 Initial Channels Available Low Register 175
8.30 Fairness Control Register 175
8.31 Link Control Register 176
8.32 Node Identification Register 177
8.33 PHY Layer Control Register 178
8.34 Isochronous Cycle Timer Register 178
8.35 Asynchronous Request Filter High Register 179
8.36 Asynchronous Request Filter Low Register 181
8.37 Physical Request Filter High Register 182
8.38 Physical Request Filter Low Register 184
8.39 Physical Upper Bound Register (Optional Register) 184
8.40 Asynchronous Context Control Register 185
8.41 Asynchronous Context Command Pointer Register 186
8.42 Isochronous Transmit Context Control Register 187
8.43 Isochronous Transmit Context Command Pointer Register 188
8.44 Isochronous Receive Context Control Register 188
8.45 Isochronous Receive Context Command Pointer Register 189
8.46 Isochronous Receive Context Match Register 190
9 TI Extension Registers 191
9.1 DV and MPEG2 Timestamp Enhancements 191
9.2 Isochronous Receive Digital Video Enhancements 192
9.3 Isochronous Receive Digital Video Enhancements Register 192
9.4 Link Enhancement Register 194
9.5 Timestamp Offset Register 195
10 PHY Register Configuration 196
10.1 Base Registers 196

Section Page

10.2 Port Status Register 199
10.3 Vendor Identification Register 200
10.4 Vendor-Dependent Register 201
10.5 Power-Class Programming 202
11 Flash Media Controller Programming Model 203
11.1 Vendor ID Register 203
11.2 Device ID Register 204
11.3 Command Register 204
11.4 Status Register 205
11.5 Class Code and Revision ID Register 206
11.6 Latency Timer and Class Cache Line Size Register 206
11.7 Header Type and BIST Register 207
11.8 Flash Media Base Address Register 207
11.9 Subsystem Vendor Identification Register 207
11.10 Subsystem Identification Register 208
11.11 Capabilities Pointer Register 208
11.12 Interrupt Line Register 208
11.13 Interrupt Pin Register 209
11.14 Minimum Grant Register 209
11.15 Maximum Latency Register 210
11.16 Capability ID and Next Item Pointer Registers 210
11.17 Power-Management Capabilities Register 211
11.18 Power-Management Control and Status Register 212
11.19 Power-Management Bridge Support Extension Register 212
11.20 Power-Management Data Register 212
11.21 General Control Register 213
11.22 Subsystem Access Register 214
11.23 Diagnostic Register 214
12 SD Host Controller Programming Model 215
12.1 Vendor ID Register 216
12.2 Device ID Register 216
12.3 Command Register 217
12.4 Status Register 218
12.5 Class Code and Revision ID Register 219
12.6 Latency Timer and Class Cache Line Size Register 219
12.7 Header Type and BIST Register 220
12.8 SD Host Base Address Register 220
12.9 Subsystem Vendor Identification Register 221
12.10 Subsystem Identification Register 221
12.11 Capabilities Pointer Register 221
12.12 Interrupt Line Register 221
12.13 Interrupt Pin Register 222
12.14 Minimum Grant Register 222
12.15 Maximum Latency Register 223
12.16 Slot Information Register 223
12.17 Capability ID and Next Item Pointer Registers 223
12.18 Power-Management Capabilities Register 224
12.19 Power-Management Control and Status Register 225

12.20 Power-Management Bridge Support Extension Register . . . 225
12.21 Power-Management Data Register . . . 225
12.22 General Control Register . . . 226
12.23 Subsystem Access Register . . . 226
12.24 Diagnostic Register . . . 227
12.25 Slot 0 3.3-V Maximum Current Register . . . 227
13 Smart Card Controller Programming Model . . . 228
13.1 Vendor ID Register . . . 229
13.2 Device ID Register . . . 229
13.3 Command Register . . . 230
13.4 Status Register . . . 231
13.5 Class Code and Revision ID Register . . . 232
13.6 Latency Timer and Class Cache Line Size Register . . . 232
13.7 Header Type and BIST Register . . . 233
13.8 Smart Card Base Address Register 0 . . . 233
13.9 Smart Card Base Address Register 1 . . . 234
13.10 Subsystem Vendor Identification Register . . . 234
13.11 Subsystem Identification Register . . . 234
13.12 Capabilities Pointer Register . . . 234
13.13 Interrupt Line Register . . . 235
13.14 Interrupt Pin Register . . . 235
13.15 Minimum Grant Register . . . 235
13.16 Maximum Latency Register . . . 236
13.17 Capability ID and Next Item Pointer Registers . . . 236
13.18 Power-Management Capabilities Register . . . 237
13.19 Power-Management Control and Status Register . . . 238
13.20 Power-Management Bridge Support Extension Register . . . 238
13.21 Power-Management Data Register . . . 238
13.22 General Control Register . . . 239
13.23 Subsystem ID Alias Register . . . 239
13.24 Class Code Alias Register . . . 240
13.25 Smart Card Configuration 1 Register . . . 240
13.26 Smart Card Configuration 2 Register . . . 241
14 Electrical Characteristics . . . 242
14.1 Absolute Maximum Ratings Over Operating Temperature Ranges . . . 242
14.2 Recommended Operating Conditions . . . 242
14.3 Electrical Characteristics Over Recommended Operating Conditions . . . 244
14.4 Electrical Characteristics Over Recommended Ranges of Operating Conditions . . . 244
14.4.1 Device . . . 244
14.4.2 Driver . . . 245
14.4.3 Receiver . . . 245
14.5 PCI Clock/Reset Timing Requirements Over Recommended Ranges of Supply Voltage and Operating Free-Air Temperature . . . 245
14.6 Switching Characteristics for PHY Port Interface . . . 246
14.7 Operating, Timing, and Switching Characteristics of XI . . . 246
14.8 PCI Timing Requirements Over Recommended Ranges of Supply Voltage and Operating Free-Air Temperature . . . 246
14.9 Reset Timing . . . 248
15 Mechanical Data . . . 249

List of Figures

Figure		Page
2−1	PCI4512 GHK/ZHK-Package Terminal Diagram	12
2−2	PCI6412 GHK/ZHK-Package Terminal Diagram	13
2−3	PCI6612 GHK/ZHK-Package Terminal Diagram	14
2−4	PCI7402 GHK/ZHK-Package Terminal Diagram	15
2−5	PCI7412 GHK/ZHK-Package Terminal Diagram	16
2−6	PCI7612 GHK/ZHK-Package Terminal Diagram	17
2−7	PCI8402 GHK/ZHK-Package Terminal Diagram	18
2−8	PCI8412 GHK/ZHK-Package Terminal Diagram	19
3−1	PCIxx12 System Block Diagram	43
3−2	3-State Bidirectional Buffer	44
3−3	PCI Reset Requirement	45
3−4	Serial ROM Application	46
3−5	SPKROUT Connection to Speaker Driver	51
3−6	Sample LED Circuit	52
3−7	Serial-Bus Start/Stop Conditions and Bit Transfers	54
3−8	Serial-Bus Protocol Acknowledge	54
3−9	Serial-Bus Protocol—Byte Write	54
3−10	Serial-Bus Protocol—Byte Read	55
3−11	EEPROM Interface Doubleword Data Collection	55
3−12	IRQ Implementation	61
3−13	System Diagram Implementing CardBus Device Class Power Management	63
3−14	Signal Diagram of Suspend Function	65
3−15	$\overline{\text{RI_OUT}}$ Functional Diagram	66
3−16	Block Diagram of a Status/Enable Cell	69
3−17	TP Cable Connections	72
3−18	Typical Compliant DC Isolated Outer Shield Termination	72
3−19	Non-DC Isolated Outer Shield Termination	73
3−20	Load Capacitance for the PCIxx12 PHY	74
3−21	Recommended Crystal and Capacitor Layout	74
5−1	ExCA Register Access Through I/O	107
5−2	ExCA Register Access Through Memory	107
6−1	Accessing CardBus Socket Registers Through PCI Memory	126
14−1	Test Load Diagram	245
14−2	Cold Reset Sequence	247
14−3	Warm Reset Sequence	247
14−4	Contact Deactivation Sequence	248
14−5	Reset Timing Diagram	248

List of Tables

Table		Page
2−1	Functional Summary	3
2−2	Terms and Definitions	10
2−3	Signal Names by GHK Terminal Number	21
2−4	CardBus PC Card Signal Names Sorted Alphabetically	24
2−5	16-Bit PC Card Signal Names Sorted Alphabetically	26
2−6	Power Supply Terminals	29
2−7	Serial PC Card Power Switch Terminals	30
2−8	Parallel PC Card Power Switch Terminals	30
2−9	PCI System Terminals	30
2−10	PCI Address and Data Terminals	31
2−11	PCI Interface Control Terminals	32
2−12	Multifunction and Miscellaneous Terminals	33
2−13	16-Bit PC Card Address and Data Terminals	34
2−14	16-Bit PC Card Interface Control Terminals	35
2−15	CardBus PC Card Interface System Terminals	36
2−16	CardBus PC Card Address and Data Terminals	37
2−17	CardBus PC Card Interface Control Terminals	38
2−18	Reserved Terminals	38
2−19	IEEE 1394 Physical Layer Terminals	39
2−20	No Connect Terminals	39
2−21	SD/MMC Terminals	40
2−22	Memory Stick/PRO Terminals	40
2−23	Smart Media/XD Terminals	41
2−24	Smart Card Terminals	42
3−1	PCI Bus Support	44
3−2	PC Card—Card Detect and Voltage Sense Connections	49
3−3	TPS2228 Control Logic—xVPP/VCORE	50
3−4	TPS2228 Control Logic—xVCC	50
3−5	TPS2226 Control Logic—xVPP	50
3−6	TPS2226 Control Logic—xVCC	50
3−7	CardBus Socket Registers	52
3−8	PCIxx12 Registers Used to Program Serial-Bus Devices	53
3−9	EEPROM Loading Map	56
3−10	Interrupt Mask and Flag Registers	59
3−11	PC Card Interrupt Events and Description	59
3−12	Interrupt Pin Register Cross Reference	61
3−13	SMI Control	62
3−14	Requirements for Internal/External 1.5-V Core Power Supply	64
3−15	Power-Management Registers	67
3−16	Function 1 Power-Management Registers	68
3−17	Function 2 Power-Management Registers	68
3−18	Function 3 Power-Management Registers	68
3−19	Function 4 Power-Management Registers	68
4−1	Bit Field Access Tag Descriptions	76
4−2	Function 0 PCI Configuration Register Map	76
4−3	Command Register Description	78
4−4	Status Register Description	79

Table		Page
4−5	Secondary Status Register Description	82
4−6	Interrupt Pin Register Cross Reference	86
4−7	Bridge Control Register Description	87
4−8	System Control Register Description	89
4−9	General Control Register Description	91
4−10	General-Purpose Event Status Register Description	93
4−11	General-Purpose Event Enable Register Description	93
4−12	General-Purpose Input Register Description	94
4−13	General-Purpose Output Register Description	94
4−14	Multifunction Routing Status Register Description	95
4−15	Retry Status Register Description	96
4−16	Card Control Register Description	97
4−17	Device Control Register Description	98
4−18	Diagnostic Register Description	99
4−19	Power Management Capabilities Register Description	100
4−20	Power Management Control/Status Register Description	101
4−21	Power Management Control/Status Bridge Support Extensions Register Description	102
4−22	Serial Bus Data Register Description	103
4−23	Serial Bus Index Register Description	103
4−24	Serial Bus Slave Address Register Description	104
4−25	Serial Bus Control/Status Register Description	105
5−1	ExCA Registers and Offsets	108
5−2	ExCA Identification and Revision Register Description	110
5−3	ExCA Interface Status Register Description	111
5−4	ExCA Power Control Register Description—82365SL Support	112
5−5	ExCA Power Control Register Description—82365SL-DF Support	112
5−6	ExCA Interrupt and General Control Register Description	113
5−7	ExCA Card Status-Change Register Description	114
5−8	ExCA Card Status-Change Interrupt Configuration Register Description	115
5−9	ExCA Address Window Enable Register Description	116
5−10	ExCA I/O Window Control Register Description	117
5−11	ExCA Memory Windows 0−4 Start-Address High-Byte Registers Description	120
5−12	ExCA Memory Windows 0−4 End-Address High-Byte Registers Description	121
5−13	ExCA Memory Windows 0−4 Offset-Address High-Byte Registers Description	122
5−14	ExCA Card Detect and General Control Register Description	123
5−15	ExCA Global Control Register Description	124
6−1	CardBus Socket Registers	126
6−2	Socket Event Register Description	127
6−3	Socket Mask Register Description	128
6−4	Socket Present State Register Description	129
6−5	Socket Force Event Register Description	131
6−6	Socket Control Register Description	132
6−7	Socket Power Management Register Description	133
7−1	Function 1 Configuration Register Map	134
7−2	Command Register Description	136
7−3	Status Register Description	137
7−4	Class Code and Revision ID Register Description	138
7−5	Latency Timer and Class Cache Line Size Register Description	138

Table		Page
7−6	Header Type and BIST Register Description	139
7−7	OHCI Base Address Register Description	139
7−8	TI Base Address Register Description	140
7−9	CardBus CIS Base Address Register Description	140
7−10	Subsystem Identification Register Description	141
7−11	Interrupt Line Register Description	142
7−12	PCI Interrupt Pin Register—Read-Only INTPIN Per Function	142
7−13	Minimum Grant and Maximum Latency Register Description	143
7−14	OHCI Control Register Description	143
7−15	Capability ID and Next Item Pointer Registers Description	144
7−16	Power Management Capabilities Register Description	145
7−17	Power Management Control and Status Register Description	146
7−18	Power Management Extension Registers Description	146
7−19	PCI PHY Control Register Description	147
7−20	PCI Miscellaneous Configuration Register Description	148
7−21	Link Enhancement Control Register Description	149
7−22	Subsystem Access Register Description	150
8−1	OHCI Register Map	153
8−2	OHCI Version Register Description	156
8−3	GUID ROM Register Description	156
8−4	Asynchronous Transmit Retries Register Description	157
8−5	CSR Control Register Description	158
8−6	Configuration ROM Header Register Description	159
8−7	Bus Options Register Description	160
8−8	Configuration ROM Mapping Register Description	161
8−9	Posted Write Address Low Register Description	162
8−10	Posted Write Address High Register Description	162
8−11	Host Controller Control Register Description	163
8−12	Self-ID Count Register Description	165
8−13	Isochronous Receive Channel Mask High Register Description	166
8−14	Isochronous Receive Channel Mask Low Register Description	167
8−15	Interrupt Event Register Description	168
8−16	Interrupt Mask Register Description	170
8−17	Isochronous Transmit Interrupt Event Register Description	172
8−18	Isochronous Receive Interrupt Event Register Description	173
8−19	Initial Bandwidth Available Register Description	174
8−20	Initial Channels Available High Register Description	174
8−21	Initial Channels Available Low Register Description	175
8−22	Fairness Control Register Description	175
8−23	Link Control Register Description	176
8−24	Node Identification Register Description	177
8−25	PHY Control Register Description	178
8−26	Isochronous Cycle Timer Register Description	178
8−27	Asynchronous Request Filter High Register Description	179
8−28	Asynchronous Request Filter Low Register Description	181
8−29	Physical Request Filter High Register Description	182
8−30	Physical Request Filter Low Register Description	184
8−31	Asynchronous Context Control Register Description	185

Table		Page
8−32	Asynchronous Context Command Pointer Register Description	186
8−33	Isochronous Transmit Context Control Register Description	187
8−34	Isochronous Receive Context Control Register Description	188
8−35	Isochronous Receive Context Match Register Description	190
9−1	TI Extension Register Map	191
9−2	Isochronous Receive Digital Video Enhancements Register Description	192
9−3	Link Enhancement Register Description	194
9−4	Timestamp Offset Register Description	195
10−1	Base Register Configuration	196
10−2	Base Register Field Descriptions	197
10−3	Page 0 (Port Status) Register Configuration	199
10−4	Page 0 (Port Status) Register Field Descriptions	199
10−5	Page 1 (Vendor ID) Register Configuration	200
10−6	Page 1 (Vendor ID) Register Field Descriptions	200
10−7	Page 7 (Vendor-Dependent) Register Configuration	201
10−8	Page 7 (Vendor-Dependent) Register Field Descriptions	201
10−9	Power Class Descriptions	202
11−1	Function 2 Configuration Register Map	203
11−2	Command Register Description	204
11−3	Status Register Description	205
11−4	Class Code and Revision ID Register Description	206
11−5	Latency Timer and Class Cache Line Size Register Description	206
11−6	Header Type and BIST Register Description	207
11−7	Flash Media Base Address Register Description	207
11−8	PCI Interrupt Pin Register	209
11−9	Minimum Grant Register Description	209
11−10	Maximum Latency Register Description	210
11−11	Capability ID and Next Item Pointer Registers Description	210
11−12	Power-Management Capabilities Register Description	211
11−13	Power-Management Control and Status Register Description	212
11−14	General Control Register	213
11−15	Subsystem Access Register Description	214
11−16	Diagnostic Register Description	214
12−1	Function 3 Configuration Register Map	215
12−2	Command Register Description	217
12−3	Status Register Description	218
12−4	Class Code and Revision ID Register Description	219
12−5	Latency Timer and Class Cache Line Size Register Description	219
12−6	Header Type and BIST Register Description	220
12−7	SD Host Base Address Register Description	220
12−8	PCI Interrupt Pin Register	222
12−9	Minimum Grant Register Description	222
12−10	Maximum Latency Register Description	223
12−11	Maximum Latency Register Description	223
12−12	Capability ID and Next Item Pointer Registers Description	223
12−13	Power-Management Capabilities Register Description	224
12−14	Power-Management Control and Status Register Description	225
12−15	General Control Register	226

Table *Page*

12−16 Subsystem Access Register Description 227
12−17 Diagnostic Register Description 227
13−1 Function 4 Configuration Register Map 228
13−2 Command Register Description 230
13−3 Status Register Description 231
13−4 Class Code and Revision ID Register Description 232
13−5 Latency Timer and Class Cache Line Size Register Description 232
13−6 Header Type and BIST Register Description 233
13−7 PCI Interrupt Pin Register 235
13−8 Minimum Grant Register Description 235
13−9 Maximum Latency Register Description 236
13−10 Capability ID and Next Item Pointer Registers Description 236
13−11 Power-Management Capabilities Register Description 237
13−12 Power-Management Control and Status Register Description 238
13−13 General Control Register 239
13−14 Subsystem ID Alias Register Description 239
13−15 Smart Card Configuration 1 Register Description 241
13−16 Smart Card Configuration 2 Register Description 241

(This page has been left blank intentionally.)

1 PCIxx12 Features

- ***PC Card Standard* 8.1 Compliant**
- ***PCI Bus Power Management Interface Specification* 1.1 Compliant**
- ***Advanced Configuration and Power Interface (ACPI) Specification* 2.0 Compliant**
- ***PCI Local Bus Specification* Revision 2.3 Compliant**
- **Windows Logo Program Compliant**
- ***PCI Bus Interface Specification for PCI-to-CardBus Bridges***
- **Fully Compliant with Provisions of IEEE Std 1394-1995 for a High-Performance Serial Bus and IEEE Std 1394a-2000**
- **Fully Compliant with *1394 Open Host Controller Interface Specification* 1.1**
- **1.5-V Core Logic and 3.3-V I/O Cells with Internal Voltage Regulator to Generate 1.5-V Core V_{CC}**
- **Universal PCI Interfaces Compatible with 3.3-V and 5-V PCI Signaling Environments**
- **Supports PC Card or CardBus with Hot Insertion and Removal**
- **Supports 132-MBps Burst Transfers to Maximize Data Throughput on Both the PCI Bus and the CardBus**
- **Supports Serialized IRQ with PCI Interrupts**
- **Programmable Multifunction Terminals**
- **Many Interrupt Modes Supported**
- **Serial ROM Interface for Loading Subsystem ID and Subsystem Vendor ID**
- **ExCA-Compatible Registers Are Mapped in Memory or I/O Space**
- **Intel 82365SL-DF Register Compatible**
- **Supports Ring Indicate, $\overline{\text{SUSPEND}}$, and PCI $\overline{\text{CLKRUN}}$ Protocols**
- **Provides VGA/Palette Memory and I/O, and Subtractive Decoding Options, LED Activity Terminals**
- **Fully Interoperable with FireWire™ and i.LINK™ Implementations of IEEE Std 1394**
- **Compliant with Intel *Mobile Power Guideline 2000***
- **Full IEEE Std 1394a-2000 Support Includes: Connection Debounce, Arbitrated Short Reset, Multispeed Concatenation, Arbitration Acceleration, Fly-By Concatenation, and Port Disable/Suspend/Resume**
- **Power-Down Features to Conserve Energy in Battery-Powered Applications Include: Automatic Device Power Down During Suspend, PCI Power Management for Link-Layer, and Inactive Ports Powered Down, Ultralow-Power Sleep Mode**
- **Two IEEE Std 1394a-2000 Fully Compliant Cable Ports at 100M Bits/s, 200M Bits/s, and 400M Bits/s**
- **Cable Ports Monitor Line Conditions for Active Connection to Remote Node**
- **Cable Power Presence Monitoring**
- **Separate Cable Bias (TPBIAS) for Each Port**
- **Physical Write Posting of up to Three Outstanding Transactions**
- **PCI Burst Transfers and Deep FIFOs to Tolerate Large Host Latency**
- **External Cycle Timer Control for Customized Synchronization**
- **Extended Resume Signaling for Compatibility with Legacy DV Components**

MicroStar BGA is a trademark of Texas Instruments.
Other trademarks are the property of their respective owners.

- **PHY-Link Logic Performs System Initialization and Arbitration Functions**
- **PHY-Link Encode and Decode Functions Included for Data-Strobe Bit Level Encoding**
- **PHY-Link Incoming Data Resynchronized to Local Clock**
- **Low-Cost 24.576-MHz Crystal Provides Transmit and Receive Data at 100M Bits/s, 200M Bits/s, and 400M Bits/s**
- **Node Power Class Information Signaling for System Power Management**
- **Register Bits Give Software Control of Contender Bit, Power Class Bits, Link Active Control Bit, and IEEE Std 1394a-2000 Features**
- **Isochronous Receive Dual-Buffer Mode**
- **Out-Of-Order Pipelining for Asynchronous Transmit Requests**
- **Register Access Fail Interrupt When the PHY SCLK Is Not Active**
- **PCI Power-Management D0, D1, D2, and D3 Power States**
- **Initial Bandwidth Available and Initial Channels Available Registers**
- **$\overline{\text{PME}}$ Support Per *1394 Open Host Controller Interface Specification***
- **Advanced Submicron, Low-Power CMOS Technology**

2 Introduction

The Texas Instruments PCI4512 controller is an integrated single-socket PC Card controller, IEEE 1394 open HCI host controller and two-port PHY. This high-performance integrated solution provides the latest in PC Card and IEEE 1394 technology.

The Texas Instruments PCI6412 controller is an integrated single-socket PC Card controller and flash media controller. This high-performance integrated solution provides the latest in PC Card, SD, MMC, Memory Stick/PRO, SmartMedia, and xD technology.

The Texas Instruments PCI6612 controller is an integrated single-socket PC Card controller, Smart Card controller, and flash media controller. This high-performance integrated solution provides the latest in PC Card, Smart Card, SD, MMC, Memory Stick/PRO, SmartMedia, and xD technology.

The Texas Instruments PCI7402 controller is an integrated single-socket IEEE 1394 open HCI host controller and two-port PHY and flash media controller. This high-performance integrated solution provides the latest in IEEE 1394, SD, MMC, Memory Stick/PRO, SmartMedia, and xD technology.

The Texas Instruments PCI7412 controller is an integrated single-socket PC Card controller, IEEE 1394 open HCI host controller and two-port PHY, and flash media controller. This high-performance integrated solution provides the latest in PC Card, IEEE 1394, SD, MMC, Memory Stick/PRO, SmartMedia, and xD technology.

The Texas Instruments PCI7612 controller is an integrated single-socket PC Card controller, Smart Card controller, IEEE 1394 open HCI host controller and two-port PHY, and flash media controller. This high-performance integrated solution provides the latest in PC Card, Smart Card, IEEE 1394, SD, MMC, Memory Stick/PRO, SmartMedia, and xD technology.

The Texas Instruments PCI8402 controller is an integrated single-socket IEEE 1394 open HCI host controller and one-port PHY and flash media controller. This high-performance integrated solution provides the latest in IEEE 1394, SD, MMC, Memory Stick/PRO, SmartMedia, and xD technology.

The Texas Instruments PCI8412 controller is an integrated single-socket PC Card controller, IEEE 1394 open HCI host controller and one-port PHY, and flash media controller. This high-performance integrated solution provides the latest in PC Card, IEEE 1394, SD, MMC, Memory Stick/PRO, SmartMedia, and xD technology.

For the remainder of this document, the PCIxx12 controller refers to the PCI4512, PCI6412, PCI6612, PCI7402, PCI7412, PCI7612, PCI8402, and PCI8412 controllers.

Table 2−1 shows a summary of the PCIxx12 functions listed by controller.

Table 2−1. Functional Summary

Controller	Function 0 (CardBus)	Function 1 (1394 OHCI)	Function 2 (Flash Media)	Function 3 (SD Host)	Function 4 (Smart Card)
PCI4512	X	X			
PCI6412	X		X	X	
PCI6612	X		X	X	X
PCI7402		X	X	X	
PCI7412	X	X	X	X	
PCI7612	X	X	X	X	X
PCI8402		X	X	X	
PCI8412	X	X	X	X	

2.1 Controller Functional Description

2.1.1 PCI4512 Controller

The PCI4512 controller is a two-function PCI controller compliant with *PCI Local Bus Specification*, Revision 2.3.

Function 0 provides an independent PC Card socket controller compliant with the *PC Card Standard* (Release 8.1). The PCI4512 controller provides features that make it the best choice for bridging between the PCI bus and PC Cards, and supports Smart Card, 16-bit, CardBus, or USB custom card interface PC Cards, powered at 5 V or 3.3 V, as required.

All card signals are internally buffered to allow hot insertion and removal without external buffering. The PCI4512 controller is register compatible with the Intel 82365SL-DF ExCA controller. The PCI4512 internal data path logic allows the host to access 8-, 16-, and 32-bit cards using full 32-bit PCI cycles for maximum performance. Independent buffering and a pipeline architecture provide an unsurpassed performance level with sustained bursting. The PCI4512 controller can be programmed to accept posted writes to improve bus utilization.

Function 1 of the PCI4512 controller is compatible with IEEE Std 1394a-2000 and the latest *1394 Open Host Controller Interface Specification*. The chip provides the IEEE1394 link and 2-port PHY function and is compatible with data rates of 100, 200, and 400 Mbits per second. Deep FIFOs are provided to buffer 1394 data and accommodate large host bus latencies. The PCI4512 controller provides physical write posting and a highly tuned physical data path for SBP-2 performance.

2.1.2 PCI6412 Controller

The PCI6412 controller is a three-function PCI controller compliant with *PCI Local Bus Specification*, Revision 2.3.

Function 0 provides an independent PC Card socket controller compliant with the *PC Card Standard* (Release 8.1). The PCI6412 controller provides features that make it the best choice for bridging between the PCI bus and PC Cards, and supports Smart Card, 16-bit, CardBus, or USB custom card interface PC Cards, powered at 5 V or 3.3 V, as required.

All card signals are internally buffered to allow hot insertion and removal without external buffering. The PCI6412 controller is register compatible with the Intel 82365SL-DF ExCA controller. The PCI6412 internal data path logic allows the host to access 8-, 16-, and 32-bit cards using full 32-bit PCI cycles for maximum performance. Independent buffering and a pipeline architecture provide an unsurpassed performance level with sustained bursting. The PCI6412 controller can be programmed to accept posted writes to improve bus utilization.

Function 2 of the PCI6412 controller is a PCI-based Flash Media controller that supports Memory Stick, Memory Stick-Pro, SmartMedia, xD, SD, and MMC cards. This function controls communication with these Flash Media cards through a dedicated Flash Media socket. In addition, this function includes DMA capabilities for improved Flash Media performance.

Function 3 of the PCI6412 controller is a PCI-based SD host controller that supports MMC, SD, and SDIO cards. This function controls communication with these Flash Media cards through a dedicated Flash Media socket. In addition, this function is compliant with the *SD Host Controller Standard Specification* and includes DMA capabilities, support for high-speed mode, and support for SD suspend/resume.

2.1.3 PCI6612 Controller

The PCI6612 controller is a four-function PCI controller compliant with *PCI Local Bus Specification*, Revision 2.3.

Function 0 provides an independent PC Card socket controller compliant with the *PC Card Standard* (Release 8.1). The PCI6612 controller provides features that make it the best choice for bridging between the PCI bus and PC Cards, and supports Smart Card, 16-bit, CardBus, or USB custom card interface PC Cards, powered at 5 V or 3.3 V, as required.

All card signals are internally buffered to allow hot insertion and removal without external buffering. The PCI6612 controller is register compatible with the Intel 82365SL-DF ExCA controller. The PCI6612 internal data path logic allows the host to access 8-, 16-, and 32-bit cards using full 32-bit PCI cycles for maximum performance. Independent buffering and a pipeline architecture provide an unsurpassed performance level with sustained bursting. The PCI6612 controller can be programmed to accept posted writes to improve bus utilization.

Function 2 of the PCI6612 controller is a PCI-based Flash Media controller that supports Memory Stick, Memory Stick-Pro, SmartMedia, xD, SD, and MMC cards. This function controls communication with these Flash Media cards through a dedicated Flash Media socket. In addition, this function includes DMA capabilities for improved Flash Media performance.

Function 3 of the PCI6612 controller is a PCI-based SD host controller that supports MMC, SD, and SDIO cards. This function controls communication with these Flash Media cards through a dedicated Flash Media socket. In addition, this function is compliant with the *SD Host Controller Standard Specification* and includes DMA capabilities, support for high-speed mode, and support for SD suspend/resume.

Function 4 of the PCI6612 controller is a PCI-based Smart Card controller used for communication with Smart Cards inserted in PC Card adapters. Utilizing Smart Card technology from Gemplus, this function provides compatibility with many different types of Smart Cards.

2.1.4 PCI7402 Controller

The PCI7402 controller is a four-function PCI controller compliant with *PCI Local Bus Specification*, Revision 2.3.

Function 0 is a dummy PC Card controller function. The PC Card socket is non-functional and the pins associated with the PC card socket may be left unconnected. The function is required for device enumeration and is provided for BIOS compatibility with existing devices. The PC Card function may be hidden from the OS by the BIOS.

Function 1 of the PCI7402 controller is compatible with IEEE Std 1394a-2000 and the latest *1394 Open Host Controller Interface Specification*. The chip provides the IEEE1394 link and 2-port PHY function and is compatible with data rates of 100, 200, and 400 Mbits per second. Deep FIFOs are provided to buffer 1394 data and accommodate large host bus latencies. The PCI7402 controller provides physical write posting and a highly tuned physical data path for SBP-2 performance.

Function 2 of the PCI7402 controller is a PCI-based Flash Media controller that supports Memory Stick, Memory Stick-Pro, SmartMedia, xD, SD, and MMC cards. This function controls communication with these Flash Media cards through a dedicated Flash Media socket. In addition, this function includes DMA capabilities for improved Flash Media performance.

Function 3 of the PCI7402 controller is a PCI-based SD host controller that supports MMC, SD, and SDIO cards. This function controls communication with these Flash Media cards through a dedicated Flash Media socket. In addition, this function is compliant with the *SD Host Controller Standard Specification* and includes DMA capabilities, support for high-speed mode, and support for SD suspend/resume.

2.1.5 PCI7412 Controller

The PCI7412 controller is a four-function PCI controller compliant with *PCI Local Bus Specification*, Revision 2.3.

Function 0 provides an independent PC Card socket controller compliant with the *PC Card Standard* (Release 8.1). The PCI7412 controller provides features that make it the best choice for bridging between the PCI bus and PC Cards, and supports 16-bit, CardBus, or USB custom card interface PC Cards, powered at 5 V or 3.3 V, as required.

All card signals are internally buffered to allow hot insertion and removal without external buffering. The PCI7412 controller is register compatible with the Intel 82365SL-DF ExCA controller. The PCI7412 internal data path logic allows the host to access 8-, 16-, and 32-bit cards using full 32-bit PCI cycles for maximum performance. Independent buffering and a pipeline architecture provide an unsurpassed performance level with sustained bursting. The PCI7412 controller can be programmed to accept posted writes to improve bus utilization.

Function 1 of the PCI7412 controller is compatible with IEEE Std 1394a-2000 and the latest *1394 Open Host Controller Interface Specification*. The chip provides the IEEE1394 link and 2-port PHY function and is compatible with data rates of 100, 200, and 400 Mbits per second. Deep FIFOs are provided to buffer 1394 data and accommodate large host bus latencies. The PCI7412 controller provides physical write posting and a highly tuned physical data path for SBP-2 performance.

Function 2 of the PCI7412 controller is a PCI-based Flash Media controller that supports Memory Stick, Memory Stick-Pro, SmartMedia, xD, SD, and MMC cards. This function controls communication with these Flash Media cards through a dedicated Flash Media socket. In addition, this function includes DMA capabilities for improved Flash Media performance.

Function 3 of the PCI7412 controller is a PCI-based SD host controller that supports MMC, SD, and SDIO cards. This function controls communication with these Flash Media cards through a dedicated Flash Media socket. In addition, this function is compliant with the *SD Host Controller Standard Specification* and includes DMA capabilities, support for high-speed mode, and support for SD suspend/resume.

2.1.6 PCI7612 Controller

The PCI7612 controller is a five-function PCI controller compliant with *PCI Local Bus Specification*, Revision 2.3.

Function 0 provides an independent PC Card socket controller compliant with the *PC Card Standard* (Release 8.1). The PCI7612 controller provides features that make it the best choice for bridging between the PCI bus and PC Cards, and supports Smart Card, 16-bit, CardBus, or USB custom card interface PC Cards, powered at 5 V or 3.3 V, as required.

All card signals are internally buffered to allow hot insertion and removal without external buffering. The PCI7612 controller is register compatible with the Intel 82365SL-DF ExCA controller. The PCI7612 internal data path logic allows the host to access 8-, 16-, and 32-bit cards using full 32-bit PCI cycles for maximum performance. Independent buffering and a pipeline architecture provide an unsurpassed performance level with sustained bursting. The PCI7612 controller can be programmed to accept posted writes to improve bus utilization.

Function 1 of the PCI7612 controller is compatible with IEEE Std 1394a-2000 and the latest *1394 Open Host Controller Interface Specification*. The chip provides the IEEE1394 link and 2-port PHY function and is compatible with data rates of 100, 200, and 400 Mbits per second. Deep FIFOs are provided to buffer 1394 data and accommodate large host bus latencies. The PCI7612 controller provides physical write posting and a highly tuned physical data path for SBP-2 performance.

Function 2 of the PCI7612 controller is a PCI-based Flash Media controller that supports Memory Stick, Memory Stick-Pro, SmartMedia, xD, SD, and MMC cards. This function controls communication with these Flash Media cards through a dedicated Flash Media socket. In addition, this function includes DMA capabilities for improved Flash Media performance.

Function 3 of the PCI7612 controller is a PCI-based SD host controller that supports MMC, SD, and SDIO cards. This function controls communication with these Flash Media cards through a dedicated Flash Media socket. In addition, this function is compliant with the *SD Host Controller Standard Specification* and includes DMA capabilities, support for high-speed mode, and support for SD suspend/resume.

Function 4 of the PCI7612 controller is a PCI-based Smart Card controller used for communication with Smart Cards inserted in PC Card adapters. Utilizing Smart Card technology from Gemplus, this function provides compatibility with many different types of Smart Cards.

2.1.7 PCI8402 Controller

The PCI8402 controller is a four-function PCI controller compliant with *PCI Local Bus Specification*, Revision 2.3.

Function 0 is a dummy PC Card controller function. The PC Card socket is non-functional and the pins associated with the PC card socket may be left unconnected. The function is required for device enumeration and is provided for BIOS compatibility with existing devices. The PC Card function may be hidden from the OS by the BIOS.

Function 1 of the PCI8402 controller is compatible with IEEE Std 1394a-2000 and the latest *1394 Open Host Controller Interface Specification*. The chip provides the IEEE1394 link and 1-port PHY function and is compatible with data rates of 100, 200, and 400 Mbits per second. Deep FIFOs are provided to buffer 1394 data and accommodate large host bus latencies. The PCI8402 controller provides physical write posting and a highly tuned physical data path for SBP-2 performance.

Function 2 of the PCI8402 controller is a PCI-based Flash Media controller that supports Memory Stick, Memory Stick-Pro, SmartMedia, xD, SD, and MMC cards. This function controls communication with these Flash Media cards through a dedicated Flash Media socket. In addition, this function includes DMA capabilities for improved Flash Media performance.

Function 3 of the PCI8402 controller is a PCI-based SD host controller that supports MMC, SD, and SDIO cards. This function controls communication with these Flash Media cards through a dedicated Flash Media socket. In addition, this function is compliant with the *SD Host Controller Standard Specification* and includes DMA capabilities, support for high-speed mode, and support for SD suspend/resume.

2.1.8 PCI8412 Controller

The PCI8412 controller is a four-function PCI controller compliant with *PCI Local Bus Specification*, Revision 2.3.

Function 0 provides an independent PC Card socket controller compliant with the *PC Card Standard* (Release 8.1). The PCI8412 controller provides features that make it the best choice for bridging between the PCI bus and PC Cards, and supports Smart Card, 16-bit, CardBus, or USB custom card interface PC Cards, powered at 5 V or 3.3 V, as required.

All card signals are internally buffered to allow hot insertion and removal without external buffering. The PCI8412 controller is register compatible with the Intel 82365SL-DF ExCA controller. The PCI8412 internal data path logic allows the host to access 8-, 16-, and 32-bit cards using full 32-bit PCI cycles for maximum performance. Independent buffering and a pipeline architecture provide an unsurpassed performance level with sustained bursting. The PCI8412 controller can be programmed to accept posted writes to improve bus utilization.

Function 1 of the PCI8412 controller is compatible with IEEE Std 1394a-2000 and the latest *1394 Open Host Controller Interface Specification*. The chip provides the IEEE1394 link and 1-port PHY function and is compatible with data rates of 100, 200, and 400 Mbits per second. Deep FIFOs are provided to buffer 1394 data and accommodate large host bus latencies. The PCI8412 controller provides physical write posting and a highly tuned physical data path for SBP-2 performance.

Function 2 of the PCI8412 controller is a PCI-based Flash Media controller that supports Memory Stick, Memory Stick-Pro, SmartMedia, xD, SD, and MMC cards. This function controls communication with these Flash Media cards through a dedicated Flash Media socket. In addition, this function includes DMA capabilities for improved Flash Media performance.

Function 3 of the PCI8412 controller is a PCI-based SD host controller that supports MMC, SD, and SDIO cards. This function controls communication with these Flash Media cards through a dedicated Flash Media socket. In addition, this function is compliant with the *SD Host Controller Standard Specification* and includes DMA capabilities, support for high-speed mode, and support for SD suspend/resume.

2.1.9 Multifunctional Terminals

Various implementation-specific functions and general-purpose inputs and outputs are provided through eight multifunction terminals. These terminals present a system with options in serial and parallel interrupts, PC Card activity indicator LEDs, flash media LEDs, and other platform-specific signals. PCI-compliant general-purpose events may be programmed and controlled through the multifunction terminals, and an ACPI-compliant programming interface is included for the general-purpose inputs and outputs.

2.1.10 PCI Bus Power Management

The PCIxx12 controller is compliant with the latest *PCI Bus Power Management Specification*, and provides several low-power modes, which enable the host power system to further reduce power consumption.

2.1.11 Power Switch Interface

The PCIxx12 controller supports both the three-pin serial interface compatible with the Texas Instruments TPS2228 (default), TPS2226, TPS2224, and TPS2223A power switches and the four-pin parallel interface compatible with the Texas Instruments TPS2211A and TPS2212 power switches.

The interface mode is selected by strapping the RSVD/VD0/$\overline{\text{VCCD1}}$ terminal either high (three-pin serial mode) or low (four-pin parallel mode). Note that when using the four-pin parallel mode the Smart Card and Flash Media sockets must be powered via discrete power switches. All of the power switches provide power to the CardBus socket on the PCIxx12 controller. The power to each dedicated flash media socket is controlled through separate power control pins or it may be configured to source power through BVCC of a dual-socket PCMCIA power switch. The power to the dedicated Smart Card socket is controlled through a separate power control pin that can control an external 5-V power switch or it may be configured to source power through BVPP of a dual-socket PCMCIA power switch. Each of the dedicated power control pins can be connected to an external power switch.

2.2 Related Documents

- *Advanced Configuration and Power Interface (ACPI) Specification* (Revision 2.0)
- *1394 Open Host Controller Interface Specification* (Release 1.1)
- *IEEE Standard for a High Performance Serial Bus* (IEEE Std 1394-1995)
- *IEEE Standard for a High Performance Serial Bus—Amendment 1* (IEEE Std 1394a-2000)
- *PC Card Standard* (Release 8.1)
- *PCI Bus Power Management Interface Specification* (Revision 1.1)
- *Serial Bus Protocol 2* (SBP-2)
- *Serialized IRQ Support for PCI Systems*
- *PCI Mobile Design Guide*
- *PCI Bus Power Management Interface Specification for PCI to CardBus Bridges*

- *PCI to PCMCIA CardBus Bridge Register Description*
- Texas Instruments TPS2224 and TPS2226 product data sheet, SLVS317
- Texas Instruments TPS2223A product data sheet, SLVS428
- Texas Instruments TPS2228 product data sheet, SLVS419
- *PCI Local Bus Specification* (Revision 2.3)
- PCMCIA Proposal (262)
- The Multimedia Card System Specification, Version 3.31
- SD Memory Card Specifications, SD Group, March 2000
- Memory Stick Format Specification, Version 2.0 (Memory Stick-Pro)
- ISO Standards for Identification Cards ISO/IEC 7816
- SD Host Controller Standard Specification, rev. 1.0
- Memory Stick Format Specification, Sony Confidential, ver. 2.0
- SmartMedia Standard 2000, May 19, 2000

2.3 Trademarks

Intel is a trademark of Intel Corporation.

TI and MicroStar BGA are trademarks of Texas Instruments.

FireWire is a trademark of Apple Computer, Inc.

i.LINK is a trademark of Sony Corporation of America.

Memory Stick is a trademark of Sony Kabushiki Kaisha TA Sony Corporation, Japan.

Other trademarks are the property of their respective owners.

2.4 Document Conventions

Throughout this data manual, several conventions convey information. These conventions are listed below:

1. To identify a binary number or field, a lower case b follows the numbers. For example: 000b is a 3-bit binary field.
2. To identify a hexadecimal number or field, a lower case h follows the numbers. For example: 8AFh is a 12-bit hexadecimal field.
3. All other numbers that appear in this document that do not have either a b or h following the number are assumed to be decimal format.
4. If the signal or terminal name has a bar above the name (for example, $\overline{\text{GRST}}$), then this indicates the logical NOT function. When asserted, this signal is a logic low, 0, or 0b.
5. RSVD indicates that the referenced item is reserved.
6. In Sections 4 through 13, the configuration space for the controller is defined. For each register bit, the software access method is identified in an access column. The legend for this access column includes the following entries:

   r – read-only access

   ru – read-only access with updates by the controller internal hardware

rw – read and write access

rcu – read access with the option to clear an asserted bit with a write-back of 1b including updates by the controller internal hardware.

2.5 Terms and Definitions

Terms and definitions used in this document are given in Table 2−2.

Table 2−2. Terms and Definitions

TERM	DEFINITIONS
AT	AT (advanced technology, as in PC AT) attachment interface
CIS	Card information structure. Tuple list defined by the PC Card standard to communicate card information to the host computer.
CSR	Control and status register
Flash Media	SmartMedia, Memory Stick, MS/PRO, xD, MMC, or SD/MMC Flash operating in an ATA compatible mode
ISO/IEC 7816	The Smart Card standard
Memory Stick™	A small-form-factor flash interface that is defined, promoted, and licensed by Sony
Memory Stick Pro™	Memory Stick Version 2.0, same physical dimensions of MS with higher speed data exchange and higher data capacity than conventional Memory Stick.
MMC	MultiMediaCard. Specified by the MMC Association, and scope is encompassed by the SD Flash specification.
OHCI	Open host controller interface
PCMCIA	Personal Computer Memory Card International Association. Standards body that governs the PC Card standards.
RSVD	Reserved for future use
SD Flash	Secure Digital Flash. Standard governed by the SD Association.
Smart Card	The name applied to ID cards containing integrated circuits, as defined by ISO/IEC 7816-1
SPI	Serial peripheral interface, a general-purpose synchronous serial interface. For more information, see the *Multimedia Card System Specification*, version 3.2.
SSFDC	Solid State Floppy Disk Card. The SSFDC Forum specifies SmartMedia.
TI Smart Card driver	A qualified software component provided by Texas Instruments that loads when an UltraMedia-based Smart Card adapter is inserted into a PC Card slot. This driver is logically attached to a CIS provided by the PCI7621 when the adapter and media are both inserted.
UltraMedia™	*De facto* industry standard promoted by Texas Instruments that integrates CardBus, Smart Card, Memory Stick, MultiMediaCard/Secure Digital and SmartMedia functionality into one controller.
xD	Extreme Digital, small form factor flash based on SmartMedia cards, developed by Fuji Film and Olympus Optical.

2.6 Ordering Information

ORDERING NUMBER	NAME	PACKAGE	COMMENT
PCI4512GHK	Single Socket CardBus Controller with Integrated 1394a-2000 OHCI Two-Port PHY/Link-Layer Controller	216-ball PBGA	Standard lead (Pb) device
PCI4512ZHK		216-ball PBGA	Lead-free (Pb-free) device
PCI6412GHK	Single Socket CardBus Controller with Dedicated Flash Media Socket	216-ball PBGA	Standard lead (Pb) device
PCI6412ZHK		216-ball PBGA	Lead-free (Pb-free) device
PCI6612GHK	Single Socket CardBus Controller with Dedicated Flash Media and Smart Card Sockets	216-ball PBGA	Standard lead (Pb) device
PCI6612ZHK		216-ball PBGA	Lead-free (Pb-free) device
PCI7402GHK	Single Socket CardBus Controller with Integrated 1394a-2000 OHCI Two-Port PHY/Link-Layer Controller with Dedicated Flash Media Socket	216-ball PBGA	Standard lead (Pb) device
PCI7402ZHK		216-ball PBGA	Lead-free (Pb-free) device
PCI7412GHK	Single Socket CardBus Controller with Integrated 1394a-2000 OHCI Two-Port PHY/Link-Layer Controller with Dedicated Flash Media Socket	216-ball PBGA	Standard lead (Pb) device
PCI7412ZHK		216-ball PBGA	Lead-free (Pb-free) device
PCI7612GHK	Single Socket CardBus Controller with Integrated 1394a-2000 OHCI Two-Port PHY/Link-Layer Controller with Dedicated Flash Media and Smart Card Sockets	216-ball PBGA	Standard lead (Pb) device
PCI7612ZHK		216-ball PBGA	Lead-free (Pb-free) device
PCI8402GHK	Single Socket CardBus Controller with Integrated 1394a-2000 OHCI One-Port PHY/Link-Layer Controller with Dedicated Flash Media Socket	216-ball PBGA	Standard lead (Pb) device
PCI8402ZHK		216-ball PBGA	Lead-free (Pb-free) device
PCI8412GHK	Single Socket CardBus Controller with Integrated 1394a-2000 OHCI One-Port PHY/Link-Layer Controller with Dedicated Flash Media Socket	216-ball PBGA	Standard lead (Pb) device
PCI8412ZHK		216-ball PBGA	Lead-free (Pb-free) device

2.7 PCIxx12 Data Manual Document History

DATE	PAGE NUMBER	REVISION
05/2005	All	Draft copy

2.8 Terminal Assignments

The PCIxx12 controller is available in the 216-terminal MicroStar BGA™ package (GHK) or the 216-terminal lead-free (Pb, atomic number 82) MicroStar BGA™ package (ZHK). Figure 2−1 is a terminal diagram of the PCI4512 package. Figure 2−2 is a terminal diagram of the PCI6412 package. Figure 2−3 is a terminal diagram of the PCI6612 package. Figure 2−4 is a terminal diagram of the PCI7402 package. Figure 2−5 is a terminal diagram of the PCI7412 package. Figure 2−6 is a terminal diagram of the PCI7612 package. Figure 2−7 is a terminal diagram of the PCI8402 package. Figure 2−8 is a terminal diagram of the PCI8412 package.

	1	2	3	4	5	6	7	8	9	10	11	12	13	14	15	16	17	18	19
W				AD16	TRDY	SERR	AD15	VCCP	AD11	C/BE0	AD4	NC	TPB0N	TPA0N	TPB1N	TPA1N	TPBIAS 1		
V					IRDY	STOP	C/BE1	AD12	AD10	AD7	AD3	NC	TPB0P	TPA0P	TPB1P	TPA1P			
U					C/BE2	DEV-SEL	PAR	AD13	AD9	AD6	AD2	NC	AGND	AGND	AVDD_ _33				VDD PLL_33
T	AD18	AD17																R0	R1
R	AD22	AD21	AD19			FRAME	PERR	AD14	AD8	AD5	AD0	CPS	TPBIAS 0	AGND			VSSPLL	XO	XI
P	VCCP	C/BE3	AD23		AD20	VCC	GND	VCC	GND	VCC	AD1	TEST0	AVDD_ _33	AVDD_ _33	VDD PLL_15		PHY_ TEST_ MA		CAD0 // D3
N	AD26	AD25	AD24		IDSEL	GND									CCD1 // CD1		CAD2 // D11	CAD1 // D4	CAD4 // D12
M	AD31	AD30	AD29		AD27	AD28								GND	CAD3 // D5		CAD6 // D13	CAD5 // D6	RSVD // D14
L	PCLK	GNT	REQ		RI_OUT / PME	VCC								VCC	CAD9 // A10		CC/ BE0 // CE1	CAD8 // D15	CAD7 // D7
K	VR_ PORT	VR_EN	PRST		GRST	GND								GND	CAD12 // A11		CAD11 // OE	CAD10 // CE2	VR_ PORT
J	MFUNC 4	MFUNC 5	MFUNC 6		SUS-PEND	VCC								VCC	CAD14 // A9		CAD15 // IOWR	CAD13 // IORD	VCCCB
H	MFUNC 3	MFUNC 2	SPKR OUT		MFUNC 1	GND								CPAR // A13	CBLOCK // A19		RSVD // A18	CC/ BE1 // A8	CAD16 // A17
G	MFUNC 0	SCL	SDA		RSVD	VCC								GND	CTRDY // A22		CGNT // WE	CSTOP // A20	CPERR // A14
F	GND	RSVD	RSVD		RSVD	VCC	GND	RSVD	VCC	GND	CAD29 // D1	VCC	GND	VCC	CAD17 // A24		CIRDY // A15	CCLK // A16	CDEV-SEL // A21
E	RSVD	RSVD	RSVD		NC	RSVD	RSVD	RSVD	RSVD	USB_ EN	CAD28 // D8	CINT // READY (IREQ)	CC/ BE3 // REG	CAD21 // A5			CAD18 // A7	CC/ BE2 // A12	CFRAME // A23
D	RSVD																		CAD19 // A25
C				RSVD / VD0 / VCCD1	RSVD	RSVD	RSVD	RSVD	LATCH / VD3 / VPPD0	CAD31 // D10	CAD27 // D0	CSERR // WAIT	CAD25 // A1	CREQ // IN-PACK	CRST // RE-SET				
B				RSVD	RSVD	RSVD	RSVD	RSVD	DATA / VD2 / VPPD1	RSVD // D2	CCD2 // CD2	CAU-DIO // BVD2 (SPKR)	CAD26 // A0	CAD23 // A3	CAD22 // A4	CVS2 // VS2			
A			RSVD	RSVD	RSVD	RSVD	RSVD	RSVD	CLOCK / VD1 / VCCD0	CAD30 // D9	CCLK RUN // WP (IOIS16)	CSTS CHG // BVD1 (STSCHG/RI)	CVS1 // VS1	CAD24 // A2	VCCCB	CAD20 // A6			
	1	2	3	4	5	6	7	8	9	10	11	12	13	14	15	16	17	18	19

Figure 2−1. PCI4512 GHK/ZHK-Package Terminal Diagram

	1	2	3	4	5	6	7	8	9	10	11	12	13	14	15	16	17	18	19
W				AD16	TRDY	SERR	AD15	VCCP	AD11	C/BE0	AD4	NC	RSVD	RSVD	RSVD	RSVD	RSVD		
V					IRDY	STOP	C/BE1	AD12	AD10	AD7	AD3	NC	RSVD	RSVD	RSVD	RSVD			
U					C/BE2	DEV-SEL	PAR	AD13	AD9	AD6	AD2	NC	GND	GND	VCC				VCC
T	AD18	AD17																GND	GND
R	AD22	AD21	AD19			FRAME	PERR	AD14	AD8	AD5	AD0	GND	RSVD	GND			GND	RSVD	RSVD
P	VCCP	C/BE3	AD23		AD20	VCC	GND	VCC	GND	VCC	AD1	TEST0	VCC	VCC	RSVD		PHY_ TEST_ MA		CAD0 // D3
N	AD26	AD25	AD24		IDSEL	GND									CCD1 // CD1		CAD2 // D11	CAD1 // D4	CAD4 // D12
M	AD31	AD30	AD29		AD27	AD28								GND	CAD3 // D5		CAD6 // D13	CAD5 // D6	RSVD // D14
L	PCLK	GNT	REQ		RI_OUT / PME	VCC								VCC	CAD9 // A10		CC/ BE0 // CE1	CAD8 // D15	CAD7 // D7
K	VR_ PORT	VR_EN	PRST		GRST	GND								GND	CAD12 // A11		CAD11 // OE	CAD10 // CE2	VR_ PORT
J	MFUNC 4	MFUNC 5	MFUNC 6		SUS-PEND	VCC								VCC	CAD14 // A9		CAD15 // IOWR	CAD13 // IORD	VCCCB
H	MFUNC 3	MFUNC 2	SPKR OUT		MFUNC 1	GND								CPAR // A13	CBLOCK // A19		RSVD // A18	CC/ BE1 // A8	CAD16 // A17
G	MFUNC 0	SCL	SDA		RSVD	VCC								GND	CTRDY // A22		CGNT // WE	CSTOP // A20	CPERR // A14
F	CLK_48	RSVD	RSVD		RSVD	VCC	GND	MC_ PWR_ CTRL_ 1 / SM_R/B	VCC	GND	CAD29 // D1	VCC	GND	VCC	CAD17 // A24		CIRDY // A15	CCLK // A16	CDEV-SEL // A21
E	RSVD	RSVD	RSVD		NC	SD_ DAT3 / SM_D7	SD_WP / SM_CE	MS_BS / SD_ CMD / SM_WE	SD_CD	USB_ EN	CAD28 // D8	CINT // READY (IREQ)	CC/ BE3 // REG	CAD21 // A5			CAD18 // A7	CC/ BE2 // A12	CFRAME // A23
D	RSVD																		CAD19 // A25
C				RSVD / VD0 / VCCD1	SD_ CMD / SM_ ALE	SD_ DAT0 / SM_D4	MS_ DATA1 / SD_ DAT1 / SM_D1	MC_ PWR_ CTRL_ 0	LATCH / VD3 / VPPD0	CAD31 // D10	CAD27 // D0	CSERR // WAIT	CAD25 // A1	CREQ // IN-PACK	CRST // RE-SET				
B				SM_ CLE	SD_ DAT2 / SM_D6	MS_ DATA3 / SD_ DAT3 / SM_D3	MS_ SDIO (DATA0) / SD_ DAT0 / SM_D0	SM_CD	DATA / VD2 / VPPD1	RSVD // D2	CCD2 // CD2	CAU-DIO // BVD2 (SPKR)	CAD26 // A0	CAD23 // A3	CAD22 // A4	CVS2 // VS2			
A			XD_CD / SM_ PHYS_ WP	SD_ CLK / SM_RE	SD_ DAT1 / SM_D5	MS_ DATA2 / SD_ DAT2 / SM_D2	MS_ CLK / SD_ CLK / SM_EL_ WP	MS_CD	CLOCK / VD1 / VCCD0	CAD30 // D9	CCLK RUN // WP (IOIS16)	CSTS CHG // BVD1 (STSC HG/RI)	CVS1 // VS1	CAD24 // A2	VCCCB	CAD20 // A6			
	1	2	3	4	5	6	7	8	9	10	11	12	13	14	15	16	17	18	19

Figure 2−2. PCI6412 GHK/ZHK-Package Terminal Diagram

	1	2	3	4	5	6	7	8	9	10	11	12	13	14	15	16	17	18	19
W				AD16	TRDY	SERR	AD15	VCCP	AD11	C/BE0	AD4	NC	RSVD	RSVD	RSVD	RSVD	RSVD		
V					IRDY	STOP	C/BE1	AD12	AD10	AD7	AD3	NC	RSVD	RSVD	RSVD	RSVD			
U					C/BE2	DEV-SEL	PAR	AD13	AD9	AD6	AD2	NC	GND	GND	VCC				VCC
T	AD18	AD17																GND	GND
R	AD22	AD21	AD19			FRAME	PERR	AD14	AD8	AD5	AD0	GND	RSVD	AGND			GND	RSVD	RSVD
P	VCCP	C/BE3	AD23		AD20	VCC	GND	VCC	GND	VCC	AD1	TEST0	VCC	VCC	RSVD		PHY_TEST_MA		CAD0 // D3
N	AD26	AD25	AD24		IDSEL	GND									CCD1 // CD1		CAD2 // D11	CAD1 // D4	CAD4 // D12
M	AD31	AD30	AD29		AD27	AD28								GND	CAD3 // D5		CAD6 // D13	CAD5 // D6	RSVD // D14
L	PCLK	GNT	REQ		RI_OUT / PME	VCC								VCC	CAD9 // A10		CC/BE0 // CE1	CAD8 // D15	CAD7 // D7
K	VR_PORT	VR_EN	PRST		GRST	GND								GND	CAD12 // A11		CAD11 // OE	CAD10 // CE2	VR_PORT
J	MFUNC 4	MFUNC 5	MFUNC 6		SUS-PEND	VCC								VCC	CAD14 // A9		CAD15 // IOWR	CAD13 // IORD	VCCCB
H	MFUNC 3	MFUNC 2	SPKR OUT		MFUNC 1	GND								CPAR // A13	CBLOCK // A19		RSVD // A18	CC/BE1 // A8	CAD16 // A17
G	MFUNC 0	SCL	SDA		SC_PWR_CTRL	SC_VCC_5V								GND	CTRDY // A22		CGNT // WE	CSTOP // A20	CPERR // A14
F	CLK_48	SC_OC	SC_CD		SC_RST	VCC	GND	MC_PWR_CTRL_1 / SM_R/B	VCC	GND	CAD29 // D1	VCC	GND	VCC	CAD17 // A24		CIRDY // A15	CCLK // A16	CDEV-SEL // A21
E	SC_DATA	SC_CLK	SC_FCB		NC	SD_DAT3 / SM_D7 / SC_GPIO3	SD_WP / SM_CE	MS_BS / SD_CMD / SM_WE	SD_CD	USB_EN	CAD28 // D8	CINT // READY (IREQ)	CC/BE3 // REG	CAD21 // A5			CAD18 // A7	CC/BE2 // A12	CFRAME // A23
D	SC_RFU																		CAD19 // A25
C				RSVD / VD0 / VCCD1	SD_CMD / SM_ALE / SC_GPIO2	SD_DAT0 / SM_D4 / SC_GPIO6	MS_DATA1 / SD_DAT1 / SM_D1	MC_PWR_CTRL_0	LATCH / VD3 / VPPD0	CAD31 // D10	CAD27 // D0	CSERR // WAIT	CAD25 // A1	CREQ // IN-PACK	CRST // RE-SET				
B				SM_CLE / SC_GPIO0	SD_DAT2 / SM_D6 / SC_GPIO4	MS_DATA3 / SD_DAT3 / SM_D3	MS_SDIO (DATA0) / SD_DAT0 / SM_D0	SM_CD	DATA / VD2 / VPPD1	RSVD // D2	CCD2 // CD2	CAU-DIO // BVD2 (SPKR)	CAD26 // A0	CAD23 // A3	CAD22 // A4	CVS2 // VS2			
A			XD_CD / SM_PHYS_WP	SD_CLK / SM_RE / SC_GPIO1	SD_DAT1 / SM_D5 / SC_GPIO5	MS_DATA2 / SD_DAT2 / SM_D2	MS_CLK / SD_CLK / SM_EL_WP	MS_CD	CLOCK / VD1 / VCCD0	CAD30 // D9	CCLK RUN // WP (IOIS16)	CSTS CHG // BVD1 (STSCHG/RI)	CVS1 // VS1	CAD24 // A2	VCCCB	CAD20 // A6			
	1	2	3	4	5	6	7	8	9	10	11	12	13	14	15	16	17	18	19

Figure 2−3. PCI6612 GHK/ZHK-Package Terminal Diagram

	1	2	3	4	5	6	7	8	9	10	11	12	13	14	15	16	17	18	19
W				AD16	TRDY	SERR	AD15	VCCP	AD11	C/BE0	AD4	NC	TPB0N	TPA0N	TPB1N	TPA1N	TPBIAS 1		
V					IRDY	STOP	C/BE1	AD12	AD10	AD7	AD3	NC	TPB0P	TPA0P	TPB1P	TPA1P			
U					C/BE2	DEV-SEL	PAR	AD13	AD9	AD6	AD2	NC	AGND	AGND	AVDD_ _33				VDD PLL_33
T	AD18	AD17																R0	R1
R	AD22	AD21	AD19			FRAME	PERR	AD14	AD8	AD5	AD0	CPS	TPBIAS 0	AGND			VSSPLL	XO	XI
P	VCCP	C/BE3	AD23		AD20	VCC	GND	VCC	GND	VCC	AD1	TEST0	AVDD_ _33	AVDD_ _33	VDD PLL_15		PHY_ TEST_ MA		RSVD
N	AD26	AD25	AD24		IDSEL	GND									RSVD		RSVD	RSVD	RSVD
M	AD31	AD30	AD29		AD27	AD28								GND	RSVD		RSVD	RSVD	RSVD
L	PCLK	GNT	REQ		RI_OUT / PME	VCC								VCC	RSVD		RSVD	RSVD	RSVD
K	VR_ PORT	VR_EN	PRST		GRST	GND								GND	RSVD		RSVD	RSVD	VR_ PORT
J	MFUNC 4	MFUNC 5	MFUNC 6		SUS-PEND	VCC								VCC	RSVD		RSVD	RSVD	RSVD
H	MFUNC 3	MFUNC 2	SPKR OUT		MFUNC 1	GND								RSVD	RSVD		RSVD	RSVD	RSVD
G	MFUNC 0	SCL	SDA		RSVD	VCC								GND	RSVD		RSVD	RSVD	RSVD
F	CLK_48	RSVD	RSVD		RSVD	VCC	GND	MC_ PWR_ CTRL_ 1 / SM_R/B	VCC	GND	RSVD	VCC	GND	VCC	RSVD		RSVD	RSVD	RSVD
E	RSVD	RSVD	RSVD		NC	SD_ DAT3 / SM_D7	SD_WP / SM_CE	MS_BS / SD_ CMD / SM_WE	SD_CD	RSVD	RSVD	RSVD	RSVD	RSVD			RSVD	RSVD	RSVD
D	RSVD																		RSVD
C				RSVD / VD0 / VCCD1	SD_ CMD / SM_ ALE	SD_ DAT0 / SM_D4	MS_ DATA1 / SD_ DAT1 / SM_D1	MC_ PWR_ CTRL_ 0	LATCH / VD3 / VPPD0	RSVD	RSVD	RSVD	RSVD	RSVD	RSVD				
B				SM_ CLE	SD_ DAT2 / SM_D6	MS_ DATA3 / SD_ DAT3 / SM_D3	MS_ SDIO (DATA0) / SD_ DAT0 / SM_D0	SM_CD	DATA / VD2 / VPPD1	RSVD	RSVD	RSVD	RSVD	RSVD	RSVD	RSVD			
A			XD_CD / SM_ PHYS_ WP	SD_ CLK / SM_RE	SD_ DAT1 / SM_D5	MS_ DATA2 / SD_ DAT2 / SM_D2	MS_ CLK / SD_ CLK / SM_EL_ WP	MS_CD	CLOCK / VD1 / VCCD0	RSVD	RSVD	RSVD	RSVD	RSVD	RSVD	RSVD			
	1	2	3	4	5	6	7	8	9	10	11	12	13	14	15	16	17	18	19

Figure 2−4. PCI7402 GHK/ZHK-Package Terminal Diagram

	1	2	3	4	5	6	7	8	9	10	11	12	13	14	15	16	17	18	19
W				AD16	TRDY	SERR	AD15	VCCP	AD11	C/BE0	AD4	NC	TPB0N	TPA0N	TPB1N	TPA1N	TPBIAS 1		
V					IRDY	STOP	C/BE1	AD12	AD10	AD7	AD3	NC	TPB0P	TPA0P	TPB1P	TPA1P			
U					C/BE2	DEV-SEL	PAR	AD13	AD9	AD6	AD2	NC	AGND	AGND	AVDD_ _33				VDD PLL_33
T	AD18	AD17																R0	R1
R	AD22	AD21	AD19			FRAME	PERR	AD14	AD8	AD5	AD0	CPS	TPBIAS 0	AGND			VSSPLL	XO	XI
P	VCCP	C/BE3	AD23		AD20	VCC	GND	VCC	GND	VCC	AD1	TEST0	AVDD_ _33	AVDD_ _33	VDD PLL_15		PHY_ TEST_ MA		CAD0 // D3
N	AD26	AD25	AD24		IDSEL	GND									CCD1 // CD1		CAD2 // D11	CAD1 // D4	CAD4 // D12
M	AD31	AD30	AD29		AD27	AD28								GND	CAD3 // D5		CAD6 // D13	CAD5 // D6	RSVD // D14
L	PCLK	GNT	REQ		RI_OUT / PME	VCC								VCC	CAD9 // A10		CC/ BE0 // CE1	CAD8 // D15	CAD7 // D7
K	VR_ PORT	VR_EN	PRST		GRST	GND								GND	CAD12 // A11		CAD11 // OE	CAD10 // CE2	VR_ PORT
J	MFUNC 4	MFUNC 5	MFUNC 6		SUS-PEND	VCC								VCC	CAD14 // A9		CAD15 // IOWR	CAD13 // IORD	VCCCB
H	MFUNC 3	MFUNC 2	SPKR OUT		MFUNC 1	GND								CPAR // A13	CBLOCK // A19		RSVD // A18	CC/ BE1 // A8	CAD16 // A17
G	MFUNC 0	SCL	SDA		RSVD	VCC								GND	CTRDY // A22		CGNT // WE	CSTOP // A20	CPERR // A14
F	CLK_48	RSVD	RSVD		RSVD	VCC	GND	MC_ PWR_ CTRL_ 1 / SM_R/B	VCC	GND	CAD29 // D1	VCC	GND	VCC	CAD17 // A24		CIRDY // A15	CCLK // A16	CDEV-SEL // A21
E	RSVD	RSVD	RSVD		NC	SD_ DAT3 / SM_D7	SD_WP / SM_CE	MS_BS / SD_ CMD / SM_WE	SD_CD	USB_ EN	CAD28 // D8	CINT // READY (IREQ)	CC/ BE3 // REG	CAD21 // A5			CAD18 // A7	CC/ BE2 // A12	CFRAME // A23
D	RSVD																		CAD19 // A25
C				RSVD / VD0 / VCCD1	SD_ CMD / SM_ ALE	SD_ DAT0 / SM_D4	MS_ DATA1 / SD_ DAT1 / SM_D1	MC_ PWR_ CTRL_ 0	LATCH / VD3 / VPPD0	CAD31 // D10	CAD27 // D0	CSERR // WAIT	CAD25 // A1	CREQ // IN-PACK	CRST // RE-SET				
B				SM_ CLE	SD_ DAT2 / SM_D6	MS_ DATA3 / SD_ DAT3 / SM_D3	MS_ SDIO (DATA0) / SD_ DAT0 / SM_D0	SM_CD	DATA / VD2 / VPPD1	RSVD // D2	CCD2 // CD2	CAU-DIO // BVD2 (SPKR)	CAD26 // A0	CAD23 // A3	CAD22 // A4	CVS2 // VS2			
A			XD_CD / SM_ PHYS_ WP	SD_ CLK / SM_RE	SD_ DAT1 / SM_D5	MS_ DATA2 / SD_ DAT2 / SM_D2	MS_ CLK / SD_ CLK / SM_EL_ WP	MS_CD	CLOCK / VD1 / VCCD0	CAD30 // D9	CCLK RUN // WP (IOIS16)	CSTS CHG // BVD1 (STSC HG/RI)	CVS1 // VS1	CAD24 // A2	VCCCB	CAD20 // A6			
	1	2	3	4	5	6	7	8	9	10	11	12	13	14	15	16	17	18	19

Figure 2−5. PCI7412 GHK/ZHK-Package Terminal Diagram

	1	2	3	4	5	6	7	8	9	10	11	12	13	14	15	16	17	18	19
W				AD16	TRDY	SERR	AD15	VCCP	AD11	C/BE0	AD4	NC	TPB0N	TPA0N	TPB1N	TPA1N	TPBIAS 1		
V					IRDY	STOP	C/BE1	AD12	AD10	AD7	AD3	NC	TPB0P	TPA0P	TPB1P	TPA1P			
U					C/BE2	DEV-SEL	PAR	AD13	AD9	AD6	AD2	NC	AGND	AGND	AVDD_ _33				VDD PLL_33
T	AD18	AD17																R0	R1
R	AD22	AD21	AD19			FRAME	PERR	AD14	AD8	AD5	AD0	CPS	TPBIAS 0	AGND			VSSPLL	XO	XI
P	VCCP	C/BE3	AD23		AD20	VCC	GND	VCC	GND	VCC	AD1	TEST0	AVDD_ _33	AVDD_ _33	VDD PLL_15		PHY_ TEST_ MA		CAD0 // D3
N	AD26	AD25	AD24		IDSEL	GND									CCD1 // CD1		CAD2 // D11	CAD1 // D4	CAD4 // D12
M	AD31	AD30	AD29		AD27	AD28								GND	CAD3 // D5		CAD6 // D13	CAD5 // D6	RSVD // D14
L	PCLK	GNT	REQ		RI_OUT / PME	VCC								VCC	CAD9 // A10		CC/ BE0 // CE1	CAD8 // D15	CAD7 // D7
K	VR_ PORT	VR_EN	PRST		GRST	GND								GND	CAD12 // A11		CAD11 // OE	CAD10 // CE2	VR_ PORT
J	MFUNC 4	MFUNC 5	MFUNC 6		SUS-PEND	VCC								VCC	CAD14 // A9		CAD15 // IOWR	CAD13 // IORD	VCCCB
H	MFUNC 3	MFUNC 2	SPKR OUT		MFUNC 1	GND								CPAR // A13	CBLOCK // A19		RSVD // A18	CC/ BE1 // A8	CAD16 // A17
G	MFUNC 0	SCL	SDA		SC_ PWR_ CTRL	SC_ VCC_ 5V								GND	CTRDY // A22		CGNT // WE	CSTOP // A20	CPERR // A14
F	CLK_48	SC_OC	SC_CD		SC_ RST	VCC	GND	MC_ PWR_ CTRL_ 1 / SM_R/B	VCC	GND	CAD29 // D1	VCC	GND	VCC	CAD17 // A24		CIRDY // A15	CCLK // A16	CDEV-SEL // A21
E	SC_ DATA	SC_ CLK	SC_ FCB		NC	SD_ DAT3 / SM_D7 / SC_ GPIO3	SD_WP / SM_CE	MS_BS / SD_ CMD / SM_WE	SD_CD	USB_ EN	CAD28 // D8	CINT // READY (IREQ)	CC/ BE3 // REG	CAD21 // A5			CAD18 // A7	CC/ BE2 // A12	CFRAME // A23
D	SC_ RFU																		CAD19 // A25
C				RSVD / VD0 / VCCD1	SD_ CMD / SM_ ALE / SC_ GPIO2	SD_ DAT0 / SM_D4 / SC_ GPIO6	MS_ DATA1 / SD_ DAT1 / SM_D1	MC_ PWR_ CTRL_ 0	LATCH / VD3 / VPPD0	CAD31 // D10	CAD27 // D0	CSERR // WAIT	CAD25 // A1	CREQ // IN-PACK	CRST // RE-SET				
B				SM_ CLE / SC_ GPIO0	SD_ DAT2 / SM_D6 / SC_ GPIO4	MS_ DATA3 / SD_ DAT3 / SM_D3	MS_ SDIO (DATA0) / SD_ DAT0 / SM_D0	SM_CD	DATA / VD2 / VPPD1	RSVD // D2	CCD2 // CD2	CAU-DIO // BVD2 (SPKR)	CAD26 // A0	CAD23 // A3	CAD22 // A4	CVS2 // VS2		
A			XD_CD / SM_ PHYS_ WP	SD_ CLK / SM_RE / SC_ GPIO1	SD_ DAT1 / SM_D5 / SC_ GPIO5	MS_ DATA2 / SD_ DAT2 / SM_D2	MS_ CLK / SD_ CLK / SM_EL_ WP	MS_CD	CLOCK / VD1 / VCCD0	CAD30 // D9	CCLK RUN // WP (IOIS16)	CSTS CHG // BVD1 (STSCHG/RI)	CVS1 // VS1	CAD24 // A2	VCCCB	CAD20 // A6			
	1	2	3	4	5	6	7	8	9	10	11	12	13	14	15	16	17	18	19

Figure 2−6. PCI7612 GHK/ZHK-Package Terminal Diagram

	1	2	3	4	5	6	7	8	9	10	11	12	13	14	15	16	17	18	19
W				AD16	TRDY	SERR	AD15	VCCP	AD11	C/BE0	AD4	NC	TPB0N	TPA0N	RSVD	RSVD	RSVD		
V					IRDY	STOP	C/BE1	AD12	AD10	AD7	AD3	NC	TPB0P	TPA0P	RSVD	RSVD			
U					C/BE2	DEV-SEL	PAR	AD13	AD9	AD6	AD2	NC	AGND	AGND	AVDD_ _33				VDD PLL_33
T	AD18	AD17																R0	R1
R	AD22	AD21	AD19			FRAME	PERR	AD14	AD8	AD5	AD0	CPS	TPBIAS 0	AGND			VSSPLL	XO	XI
P	VCCP	C/BE3	AD23		AD20	VCC	GND	VCC	GND	VCC	AD1	TEST0	AVDD_ _33	AVDD_ _33	VDD PLL_15		PHY_ TEST_ MA		RSVD
N	AD26	AD25	AD24		IDSEL	GND									RSVD		RSVD	RSVD	RSVD
M	AD31	AD30	AD29		AD27	AD28								GND	RSVD		RSVD	RSVD	RSVD
L	PCLK	GNT	REQ		RI_OUT / PME	VCC								VCC	RSVD		RSVD	RSVD	RSVD
K	VR_ PORT	VR_EN	PRST		GRST	GND								GND	RSVD		RSVD	RSVD	VR_ PORT
J	MFUNC 4	MFUNC 5	MFUNC 6		SUS-PEND	VCC								VCC	RSVD		RSVD	RSVD	RSVD
H	MFUNC 3	MFUNC 2	SPKR OUT		MFUNC 1	GND								RSVD	RSVD		RSVD	RSVD	RSVD
G	MFUNC 0	SCL	SDA		RSVD	VCC								GND	RSVD		RSVD	RSVD	RSVD
F	CLK_48	RSVD	RSVD		RSVD	VCC	GND	MC_ PWR_ CTRL_ 1 / SM_R/B	VCC	GND	RSVD	VCC	GND	VCC	RSVD		RSVD	RSVD	RSVD
E	RSVD	RSVD	RSVD		NC	SD_ DAT3 / SM_D7	SD_WP / SM_CE	MS_BS / SD_ CMD / SM_WE	SD_CD	RSVD	RSVD	RSVD	RSVD	RSVD			RSVD	RSVD	RSVD
D	RSVD																		RSVD
C				RSVD / VD0 / VCCD1	SD_ CMD / SM_ ALE	SD_ DAT0 / SM_D4	MS_ DATA1 / SD_ DAT1 / SM_D1	MC_ PWR_ CTRL_ 0	LATCH / VD3 / VPPD0	RSVD	RSVD	RSVD	RSVD	RSVD	RSVD				
B				SM_ CLE	SD_ DAT2 / SM_D6	MS_ DATA3 / SD_ DAT3 / SM_D3	MS_ SDIO (DATA0) / SD_ DAT0 / SM_D0	SM_CD	DATA / VD2 / VPPD1	RSVD	RSVD	RSVD	RSVD	RSVD	RSVD	RSVD			
A			XD_CD / SM_ PHYS_ WP	SD_ CLK / SM_RE	SD_ DAT1 / SM_D5	MS_ DATA2 / SD_ DAT2 / SM_D2	MS_ CLK / SD_ CLK / SM_EL_ WP	MS_CD	CLOCK / VD1 / VCCD0	RSVD	RSVD	RSVD	RSVD	RSVD	RSVD	RSVD			
	1	2	3	4	5	6	7	8	9	10	11	12	13	14	15	16	17	18	19

Figure 2−7. PCI8402 GHK/ZHK-Package Terminal Diagram

	1	2	3	4	5	6	7	8	9	10	11	12	13	14	15	16	17	18	19
W				AD16	TRDY	SERR	AD15	VCCP	AD11	C/BE0	AD4	NC	TPB0N	TPA0N	RSVD	RSVD	RSVD		
V					IRDY	STOP	C/BE1	AD12	AD10	AD7	AD3	NC	TPB0P	TPA0P	RSVD	RSVD			
U					C/BE2	DEV-SEL	PAR	AD13	AD9	AD6	AD2	NC	AGND	AGND	AVDD_ _33				VDD PLL_33
T	AD18	AD17																R0	R1
R	AD22	AD21	AD19			FRAME	PERR	AD14	AD8	AD5	AD0	CPS	TPBIAS 0	AGND			VSSPLL	XO	XI
P	VCCP	C/BE3	AD23		AD20	VCC	GND	VCC	GND	VCC	AD1	TEST0	AVDD_ _33	AVDD_ _33	VDD PLL_15		PHY_ TEST_ MA		CAD0 // D3
N	AD26	AD25	AD24		IDSEL	GND									CCD1 // CD1		CAD2 // D11	CAD1 // D4	CAD4 // D12
M	AD31	AD30	AD29		AD27	AD28								GND	CAD3 // D5		CAD6 // D13	CAD5 // D6	RSVD // D14
L	PCLK	GNT	REQ		RI_OUT / PME	VCC								VCC	CAD9 // A10		CC/ BE0 // CE1	CAD8 // D15	CAD7 // D7
K	VR_ PORT	VR_EN	PRST		GRST	GND								GND	CAD12 // A11		CAD11 // OE	CAD10 // CE2	VR_ PORT
J	MFUNC 4	MFUNC 5	MFUNC 6		SUS-PEND	VCC								VCC	CAD14 // A9		CAD15 // IOWR	CAD13 // IORD	VCCCB
H	MFUNC 3	MFUNC 2	SPKR OUT		MFUNC 1	GND								CPAR // A13	CBLOCK // A19		RSVD // A18	CC/ BE1 // A8	CAD16 // A17
G	MFUNC 0	SCL	SDA		RSVD	VCC								GND	CTRDY // A22		CGNT // WE	CSTOP // A20	CPERR // A14
F	CLK_48	RSVD	RSVD		RSVD	VCC	GND	MC_ PWR_ CTRL_ 1 / SM_R/B	VCC	GND	CAD29 // D1	VCC	GND	VCC	CAD17 // A24		CIRDY // A15	CCLK // A16	CDEV-SEL // A21
E	RSVD	RSVD	RSVD		NC	SD_ DAT3 / SM_D7	SD_WP / SM_CE	MS_BS / SD_ CMD / SM_WE	SD_CD	USB_ EN	CAD28 // D8	CINT // READY (IREQ)	CC/ BE3 // REG	CAD21 // A5			CAD18 // A7	CC/ BE2 // A12	CFRAME // A23
D	RSVD																		CAD19 // A25
C				RSVD / VD0 / VCCD1	SD_ CMD / SM_ ALE	SD_ DAT0 / SM_D4	MS_ DATA1 / SD_ DAT1 / SM_D1	MC_ PWR_ CTRL_ 0	LATCH / VD3 / VPPD0	CAD31 // D10	CAD27 // D0	CSERR // WAIT	CAD25 // A1	CREQ // IN-PACK	CRST // RE-SET				
B				SM_ CLE	SD_ DAT2 / SM_D6	MS_ DATA3 / SD_ DAT3 / SM_D3	MS_ SDIO (DATA0) / SD_ DAT0 / SM_D0	SM_CD	DATA / VD2 / VPPD1	RSVD // D2	CCD2 // CD2	CAU-DIO // BVD2 (SPKR)	CAD26 // A0	CAD23 // A3	CAD22 // A4	CVS2 // VS2			
A			XD_CD / SM_ PHYS_ WP	SD_ CLK / SM_RE	SD_ DAT1 / SM_D5	MS_ DATA2 / SD_ DAT2 / SM_D2	MS_ CLK / SD_ CLK / SM_EL_ WP	MS_CD	CLOCK / VD1 / VCCD0	CAD30 // D9	CCLK RUN // WP (IOIS16)	CSTS CHG // BVD1 (STSC HG/RI)	CVS1 // VS1	CAD24 // A2	VCCCB	CAD20 // A6			
	1	2	3	4	5	6	7	8	9	10	11	12	13	14	15	16	17	18	19

Figure 2−8. PCI8412 GHK/ZHK-Package Terminal Diagram

Table 2−3 lists the terminal assignments arranged in terminal-number order, with corresponding signal names for both CardBus and 16-bit PC Cards for the PCIxx12 GHK packages. Table 2−4 and Table 2−5 list the terminal assignments arranged in alphanumerical order by signal name, with corresponding terminal numbers for the GHK package; Table 2−4 is for CardBus signal names and Table 2−5 is for 16-bit PC Card signal names.

Terminal E5 on the GHK package is an identification ball used for device orientation.

Table 2−3. Signal Names by GHK Terminal Number

TERMINAL NUMBER	SIGNAL NAME		TERMINAL NUMBER	SIGNAL NAME	
	CardBus PC Card	16-Bit PC Card		CardBus PC Card	16-Bit PC Card
A03	XD_CD / SM_PHYS_WP	XD_CD / SM_PHYS_WP	C11	CAD27	D0
A04	SD_CLK / SM_RE / SC_GPIO1	SD_CLK / SM_RE / SC_GPIO1	C12	CSERR	WAIT
A05	SD_DAT1 / SM_D5 / SC_GPIO5	SD_DAT1 / SM_D5 / SC_GPIO5	C13	CAD25	A1
A06	MS_DATA2 / SD_DAT2 / SM_D2	MS_DATA2 / SD_DAT2 / SM_D2	C14	CREQ	INPACK
A07	MS_CLK / SD_CLK / SM_EL_WP	MS_CLK / SD_CLK / SM_EL_WP	C15	CRST	RESET
A08	MS_CD	MS_CD	D01	SC_RFU	SC_RFU
A09	CLOCK / VD1 / VCCD0	CLOCK / VD1 / VCCD0	D19	CAD19	A25
A10	CAD30	D9	E01	SC_DATA	SC_DATA
A11	CCLKRUN	WP(IOIS16)	E02	SC_CLK	SC_CLK
A12	CSTSCHG	BVD1(STSCHG/RI)	E03	SC_FCB	SC_FCB
A13	CVS1	VS1	E05	NC	NC
A14	CAD24	A2	E06	SD_DAT3 / SM_D7 / SC_GPIO3	SD_DAT3 / SM_D7 / SC_GPIO3
A15	VCCCB	VCCCB	E07	SD_WP / SM_CE	SD_WP / SM_CE
A16	CAD20	A6	E08	MS_BS / SD_CMD / SM_WE	MS_BS / SD_CMD / SM_WE
B04	SM_CLE / SC_GPIO0	SM_CLE / SC_GPIO0	E09	SD_CD	SD_CD
B05	SD_DAT2 / SM_D6 / SC_GPIO4	SD_DAT2 / SM_D6 / SC_GPIO4	E10	USB_EN	USB_EN
B06	MS_DATA3 / SD_DAT3 / SM_D3	MS_DATA3 / SD_DAT3 / SM_D3	E11	CAD28	D8
B07	MS_SDIO(DATA0) / SD_DAT0 / SM_D0	MS_SDIO(DATA0) / SD_DAT0 / SM_D0	E12	CINT	READY(IREQ)
B08	SM_CD	SM_CD	E13	CC/BE3	REG
B09	DATA / VD2 / VPPD1	DATA / VD2 / VPPD1	E14	CAD21	A5
B10	RSVD	D2	E17	CAD18	A7
B11	CCD2	CD2	E18	CC/BE2	A12
B12	CAUDIO	BVD2(SPKR)	E19	CFRAME	A23
B13	CAD26	A0	F01	CLK_48	CLK_48
B14	CAD23	A3	F02	SC_OC	SC_OC
B15	CAD22	A4	F03	SC_CD	SC_CD
B16	CVS2	VS2	F05	SC_RST	SC_RST
C04	RSVD / VD0 / VCCD1	RSVD / VD0 / VCCD1	F06	VCC	VCC
C05	SD_CMD / SM_ALE / SC_GPIO2	SD_CMD / SM_ALE / SC_GPIO2	F07	GND	GND
C06	SD_DAT0 / SM_D4 / SC_GPIO6	SD_DAT0 / SM_D4 / SC_GPIO6	F08	MC_PWR_CTRL_1 / SM_R/B	MC_PWR_CTRL_1 / SM_R/B
C07	MS_DATA1 / SD_DAT1 / SM_D1	MS_DATA1 / SD_DAT1 / SM_D1	F09	VCC	VCC
C08	MC_PWR_CTRL_0	MC_PWR_CTRL_0	F10	GND	GND
C09	LATCH / VD3 / VPPD0	LATCH / VD3 / VPPD0	F11	CAD29	D1
C10	CAD31	D10	F12	VCC	VCC

Table 2−3. Signal Names by GHK Terminal Number (Continued)

TERMINAL NUMBER	SIGNAL NAME		TERMINAL NUMBER	SIGNAL NAME	
	CardBus PC Card	16-Bit PC Card		CardBus PC Card	16-Bit PC Card
F13	GND	GND	K17	CAD11	$\overline{OE}$
F14	VCC	VCC	K18	CAD10	$\overline{CE2}$
F15	CAD17	A24	K19	VR_PORT	VR_PORT
F17	$\overline{CIRDY}$	A15	L01	PCLK	PCLK
F18	CCLK	A16	L02	$\overline{GNT}$	$\overline{GNT}$
F19	$\overline{CDEVSEL}$	A21	L03	$\overline{REQ}$	$\overline{REQ}$
G01	MFUNC0	MFUNC0	L05	$\overline{RI_OUT}/\overline{PME}$	$\overline{RI_OUT}/\overline{PME}$
G02	SCL	SCL	L06	VCC	VCC
G03	SDA	SDA	L14	VCC	VCC
G05	SC_PWR_CTRL	SC_PWR_CTRL	L15	CAD9	A10
G06	SC_VCC_5V	SC_VCC_5V	L17	CC/$\overline{BE0}$	$\overline{CE1}$
G14	GND	GND	L18	CAD8	D15
G15	$\overline{CTRDY}$	A22	L19	CAD7	D7
G17	$\overline{CGNT}$	$\overline{WE}$	M01	AD31	AD31
G18	$\overline{CSTOP}$	A20	M02	AD30	AD30
G19	$\overline{CPERR}$	A14	M03	AD29	AD29
H01	MFUNC3	MFUNC3	M05	AD27	AD27
H02	MFUNC2	MFUNC2	M06	AD28	AD28
H03	SPKROUT	SPKROUT	M14	GND	GND
H05	MFUNC1	MFUNC1	M15	CAD3	D5
H06	GND	GND	M17	CAD6	D13
H14	CPAR	A13	M18	CAD5	D6
H15	$\overline{CBLOCK}$	A19	M19	RSVD	D14
H17	RSVD	A18	N01	AD26	AD26
H18	CC/$\overline{BE1}$	A8	N02	AD25	AD25
H19	CAD16	A17	N03	AD24	AD24
J01	MFUNC4	MFUNC4	N05	IDSEL	IDSEL
J02	MFUNC5	MFUNC5	N06	GND	GND
J03	MFUNC6	MFUNC6	N15	$\overline{CCD1}$	$\overline{CD1}$
J05	$\overline{SUSPEND}$	$\overline{SUSPEND}$	N17	CAD2	D11
J06	VCC	VCC	N18	CAD1	D4
J14	VCC	VCC	N19	CAD4	D12
J15	CAD14	A9	P01	VCCP	VCCP
J17	CAD15	$\overline{IOWR}$	P02	C/$\overline{BE3}$	C/$\overline{BE3}$
J18	CAD13	$\overline{IORD}$	P03	AD23	AD23
J19	VCCCB	VCCCB	P05	AD20	AD20
K01	VR_PORT	VR_PORT	P06	VCC	VCC
K02	$\overline{VR_EN}$	$\overline{VR_EN}$	P07	GND	GND
K03	$\overline{PRST}$	$\overline{PRST}$	P08	VCC	VCC
K05	$\overline{GRST}$	$\overline{GRST}$	P09	GND	GND
K06	GND	GND	P10	VCC	VCC
K14	GND	GND	P11	AD1	AD1
K15	CAD12	A11	P12	TEST0	TEST0

Table 2−3. Signal Names by GHK Terminal Number (Continued)

TERMINAL NUMBER	SIGNAL NAME		TERMINAL NUMBER	SIGNAL NAME	
	CardBus PC Card	16-Bit PC Card		CardBus PC Card	16-Bit PC Card
P13	AVDD_33	AVDD_33	U12	NC	NC
P14	AVDD_33	AVDD_33	U13	AGND	AGND
P15	VDDPLL_15	VDDPLL_15	U14	AGND	AGND
P17	PHY_TEST_MA	PHY_TEST_MA	U15	AVDD_33	AVDD_33
P19	CAD0	D3	U19	VDDPLL_33	VDDPLL_33
R01	AD22	AD22	V05	$\overline{\text{IRDY}}$	$\overline{\text{IRDY}}$
R02	AD21	AD21	V06	$\overline{\text{STOP}}$	$\overline{\text{STOP}}$
R03	AD19	AD19	V07	C/$\overline{\text{BE1}}$	C/$\overline{\text{BE1}}$
R06	$\overline{\text{FRAME}}$	$\overline{\text{FRAME}}$	V08	AD12	AD12
R07	$\overline{\text{PERR}}$	$\overline{\text{PERR}}$	V09	AD10	AD10
R08	AD14	AD14	V10	AD7	AD7
R09	AD8	AD8	V11	AD3	AD3
R10	AD5	AD5	V12	NC	NC
R11	AD0	AD0	V13	TPB0P	TPB0P
R12	CPS	CPS	V14	TPA0P	TPA0P
R13	TPBIAS0	TPBIAS0	V15	TPB1P	TPB1P
R14	AGND	AGND	V16	TPA1P	TPA1P
R17	VSSPLL	VSSPLL	W04	AD16	AD16
R18	XO	XO	W05	$\overline{\text{TRDY}}$	$\overline{\text{TRDY}}$
R19	XI	XI	W06	$\overline{\text{SERR}}$	$\overline{\text{SERR}}$
T01	AD18	AD18	W07	AD15	AD15
T02	AD17	AD17	W08	VCCP	VCCP
T18	R0	R0	W09	AD11	AD11
T19	R1	R1	W10	C/$\overline{\text{BE0}}$	C/$\overline{\text{BE0}}$
U05	C/$\overline{\text{BE2}}$	C/$\overline{\text{BE2}}$	W11	AD4	AD4
U06	$\overline{\text{DEVSEL}}$	$\overline{\text{DEVSEL}}$	W12	NC	NC
U07	PAR	PAR	W13	TPB0N	TPB0N
U08	AD13	AD13	W14	TPA0N	TPA0N
U09	AD9	AD9	W15	TPB1N	TPB1N
U10	AD6	AD6	W16	TPA1N	TPA1N
U11	AD2	AD2	W17	TPBIAS1	TPBIAS1

Table 2−4. CardBus PC Card Signal Names Sorted Alphabetically

SIGNAL NAME	TERMINAL NUMBER	SIGNAL NAME	TERMINAL NUMBER	SIGNAL NAME	TERMINAL NUMBER
AD0	R11	CAD5	M18	$\overline{\text{CGNT}}$	G17
AD1	P11	CAD6	M17	$\overline{\text{CINT}}$	E12
AD2	U11	CAD7	L19	$\overline{\text{CIRDY}}$	F17
AD3	V11	CAD8	L18	CLK_48	F01
AD4	W11	CAD9	L15	CLOCK / VD1 / $\overline{\text{VCCD0}}$	A09
AD5	R10	CAD10	K18	CPAR	H14
AD6	U10	CAD11	K17	$\overline{\text{CPERR}}$	G19
AD7	V10	CAD12	K15	CPS	R12
AD8	R09	CAD13	J18	$\overline{\text{CREQ}}$	C14
AD9	U09	CAD14	J15	$\overline{\text{CRST}}$	C15
AD10	V09	CAD15	J17	$\overline{\text{CSERR}}$	C12
AD11	W09	CAD16	H19	$\overline{\text{CSTOP}}$	G18
AD12	V08	CAD17	F15	CSTSCHG	A12
AD13	U08	CAD18	E17	$\overline{\text{CTRDY}}$	G15
AD14	R08	CAD19	D19	CVS1	A13
AD15	W07	CAD20	A16	CVS2	B16
AD16	W04	CAD21	E14	DATA / VD2 / VPPD1	B09
AD17	T02	CAD22	B15	$\overline{\text{DEVSEL}}$	U06
AD18	T01	CAD23	B14	$\overline{\text{FRAME}}$	R06
AD19	R03	CAD24	A14	GND	F07
AD20	P05	CAD25	C13	GND	F10
AD21	R02	CAD26	B13	GND	F13
AD22	R01	CAD27	C11	GND	G14
AD23	P03	CAD28	E11	GND	H06
AD24	N03	CAD29	F11	GND	K06
AD25	N02	CAD30	A10	GND	K14
AD26	N01	CAD31	C10	GND	M14
AD27	M05	CAUDIO	B12	GND	N06
AD28	M06	C/$\overline{\text{BE0}}$	W10	GND	P07
AD29	M03	C/$\overline{\text{BE1}}$	V07	GND	P09
AD30	M02	C/$\overline{\text{BE2}}$	U05	$\overline{\text{GNT}}$	L02
AD31	M01	C/$\overline{\text{BE3}}$	P02	$\overline{\text{GRST}}$	K05
AGND	R14	$\overline{\text{CBLOCK}}$	H15	IDSEL	N05
AGND	U13	CC/$\overline{\text{BE0}}$	L17	$\overline{\text{IRDY}}$	V05
AGND	U14	CC/$\overline{\text{BE1}}$	H18	LATCH / VD3 / VPPD0	C09
AVDD_33	P13	CC/$\overline{\text{BE2}}$	E18	MC_PWR_CTRL_0	C08
AVDD_33	P14	CC/$\overline{\text{BE3}}$	E13	MC_PWR_CTRL_1 / SM_R/$\overline{\text{B}}$	F08
AVDD_33	U15	$\overline{\text{CCD1}}$	N15	MFUNC0	G01
CAD0	P19	$\overline{\text{CCD2}}$	B11	MFUNC1	H05
CAD1	N18	CCLK	F18	MFUNC2	H02
CAD2	N17	$\overline{\text{CCLKRUN}}$	A11	MFUNC3	H01
CAD3	M15	$\overline{\text{CDEVSEL}}$	F19	MFUNC4	J01
CAD4	N19	$\overline{\text{CFRAME}}$	E19	MFUNC5	J02

Table 2−4. CardBus PC Card Signal Names Sorted Alphabetically (Continued)

SIGNAL NAME	TERMINAL NUMBER	SIGNAL NAME	TERMINAL NUMBER	SIGNAL NAME	TERMINAL NUMBER
MFUNC6	J03	SCL	G02	TPB0P	V13
MS_BS / SD_CMD / SM_WE	E08	SC_OC	F02	TPB1N	W15
MS_CD	A08	SC_PWR_CTRL	G05	TPB1P	V15
MS_CLK / SD_CLK / SM_EL_WP	A07	SC_RFU	D01	TRDY	W05
MS_DATA1 / SD_DAT1 / SM_D1	C07	SC_RST	F05	USB_EN	E10
MS_DATA2 / SD_DAT2 / SM_D2	A06	SC_VCC_5V	G06	VCC	F06
MS_DATA3 / SD_DAT3 / SM_D3	B06	SDA	G03	VCC	F09
MS_SDIO(DATA0) / SD_DAT0 / SM_D0	B07	SD_CD	E09	VCC	F12
NC	E05	SD_CLK / SM_RE / SC_GPIO1	A04	VCC	F14
NC	U12	SD_CMD / SM_ALE / SC_GPIO2	C05	VCC	J06
NC	V12	SD_DAT0 / SM_D4 / SC_GPIO6	C06	VCC	J14
NC	W12	SD_DAT1 / SM_D5 / SC_GPIO5	A05	VCC	L06
PAR	U07	SD_DAT2 / SM_D6 / SC_GPIO4	B05	VCC	L14
PCLK	L01	SD_DAT3 / SM_D7 / SC_GPIO3	E06	VCC	P06
PERR	R07	SD_WP / SM_CE	E07	VCC	P08
PHY_TEST_MA	P17	SERR	W06	VCC	P10
PRST	K03	SM_CD	B08	VCCCB	A15
REQ	L03	SM_CLE / SC_GPIO0	B04	VCCCB	J19
RI_OUT/PME	L05	SPKROUT	H03	VCCP	P01
RSVD	B10	STOP	V06	VCCP	W08
RSVD	H17	SUSPEND	J05	VDDPLL_15	P15
RSVD	M19	TEST0	P12	VDDPLL_33	U19
RSVD / VD0 / VCCD1	C04	TPA0N	W14	VR_EN	K02
R0	T18	TPA0P	V14	VR_PORT	K01
R1	T19	TPA1N	W16	VR_PORT	K19
SC_CD	F03	TPA1P	V16	VSSPLL	R17
SC_CLK	E02	TPBIAS0	R13	XD_CD / SM_PHYS_WP	A03
SC_DATA	E01	TPBIAS1	W17	XI	R19
SC_FCB	E03	TPB0N	W13	XO	R18

Table 2−5. 16-Bit PC Card Signal Names Sorted Alphabetically

SIGNAL NAME	TERMINAL NUMBER	SIGNAL NAME	TERMINAL NUMBER	SIGNAL NAME	TERMINAL NUMBER
AD0	R11	A4	B15	D5	M15
AD1	P11	A5	E14	D6	M18
AD2	U11	A6	A16	D7	L19
AD3	V11	A7	E17	D8	E11
AD4	W11	A8	H18	D9	A10
AD5	R10	A9	J15	D10	C10
AD6	U10	A10	L15	D11	N17
AD7	V10	A11	K15	D12	N19
AD8	R09	A12	E18	D13	M17
AD9	U09	A13	H14	D14	M19
AD10	V09	A14	G19	D15	L18
AD11	W09	A15	F17	$\overline{\text{FRAME}}$	R06
AD12	V08	A16	F18	GND	F07
AD13	U08	A17	H19	GND	F10
AD14	R08	A18	H17	GND	F13
AD15	W07	A19	H15	GND	G14
AD16	W04	A20	G18	GND	H06
AD17	T02	A21	F19	GND	K06
AD18	T01	A22	G15	GND	K14
AD19	R03	A23	E19	GND	M14
AD20	P05	A24	F15	GND	N06
AD21	R02	A25	D19	GND	P07
AD22	R01	BVD1($\overline{\text{STSCHG}}$/$\overline{\text{RI}}$)	A12	GND	P09
AD23	P03	BVD2($\overline{\text{SPKR}}$)	B12	$\overline{\text{GNT}}$	L02
AD24	N03	C/$\overline{\text{BE0}}$	W10	$\overline{\text{GRST}}$	K05
AD25	N02	C/$\overline{\text{BE1}}$	V07	IDSEL	N05
AD26	N01	C/$\overline{\text{BE2}}$	U05	$\overline{\text{INPACK}}$	C14
AD27	M05	C/$\overline{\text{BE3}}$	P02	$\overline{\text{IORD}}$	J18
AD28	M06	$\overline{\text{CD1}}$	N15	$\overline{\text{IOWR}}$	J17
AD29	M03	$\overline{\text{CD2}}$	B11	$\overline{\text{IRDY}}$	V05
AD30	M02	$\overline{\text{CE1}}$	L17	LATCH / VD3 / VPPD0	C09
AD31	M01	$\overline{\text{CE2}}$	K18	MC_PWR_CTRL_0	C08
AGND	R14	CLK_48	F01	MC_PWR_CTRL_1 / SM_R/$\overline{\text{B}}$	F08
AGND	U13	CLOCK / VD1 / $\overline{\text{VCCD0}}$	A09	MFUNC0	G01
AGND	U14	CPS	R12	MFUNC1	H05
AVDD_33	P13	DATA / VD2 / VPPD1	B09	MFUNC2	H02
AVDD_33	P14	$\overline{\text{DEVSEL}}$	U06	MFUNC3	H01
AVDD_33	U15	D0	C11	MFUNC4	J01
A0	B13	D1	F11	MFUNC5	J02
A1	C13	D2	B10	MFUNC6	J03
A2	A14	D3	P19	$\overline{\text{MS_CD}}$	A08
A3	B14	D4	N18	MS_B$\overline{\text{S}}$ / $\overline{\text{SD_}}$CMD / SM_WE	E08

Table 2−5. 16-Bit PC Card Signal Names Sorted Alphabetically (Continued)

SIGNAL NAME	TERMINAL NUMBER	SIGNAL NAME	TERMINAL NUMBER	SIGNAL NAME	TERMINAL NUMBER
MS_CLK / SD_CLK / SM_EL_WP	A07	SC_RFU	D01	USB_EN	E10
MS_DATA1 / SD_DAT1 / SM_D1	C07	SC_RST	F05	VCC	F06
MS_DATA2 / SD_DAT2 / SM_D2	A06	SC_VCC_5V	G06	VCC	F09
MS_DATA3 / SD_DAT3 / SM_D3	B06	SDA	G03	VCC	F12
MS_SDIO(DATA0) / SD_DAT0 / SM_D0	B07	SD_CD	E09	VCC	F14
NC	E05	SD_CLK / SM_RE / SC_GPIO1	A04	VCC	J06
NC	U12	SD_CMD / SM_ALE / SC_GPIO2	C05	VCC	J14
NC	V12	SD_DAT0 / SM_D4 / SC_GPIO6	C06	VCC	L06
NC	W12	SD_DAT1 / SM_D5 / SC_GPIO5	A05	VCC	L14
OE	K17	SD_DAT2 / SM_D6 / SC_GPIO4	B05	VCC	P06
PAR	U07	SD_DAT3 / SM_D7 / SC_GPIO3	E06	VCC	P08
PCLK	L01	SD_WP / SM_CE	E07	VCC	P10
PERR	R07	SERR	W06	VCCCB	A15
PHY_TEST_MA	P17	SM_CD	B08	VCCCB	J19
PRST	K03	SM_CLE / SC_GPIO0	B04	VCCP	P01
READY(IREQ)	E12	SPKROUT	H03	VCCP	W08
REG	E13	STOP	V06	VDDPLL_15	P15
REQ	L03	SUSPEND	J05	VDDPLL_33	U19
RI_OUT/PME	L05	TEST0	P12	VR_EN	K02
RESET	C15	TPA0N	W14	VR_PORT	K01
RSVD / VD0 / VCCD1	C04	TPA0P	V14	VR_PORT	K19
R0	T18	TPA1N	W16	VSSPLL	R17
R1	T19	TPA1P	V16	VS1	A13
SC_CD	F03	TPBIAS0	R13	VS2	B16
SC_CLK	E02	TPBIAS1	W17	WAIT	C12
SC_DATA	E01	TPB0N	W13	WE	G17
SC_FCB	E03	TPB0P	V13	WP(IOIS16)	A11
SCL	G02	TPB1N	W15	XD_CD / SM_PHYS_WP	A03
SC_OC	F02	TPB1P	V15	XI	R19
SC_PWR_CTRL	G05	TRDY	W05	XO	R18

2.9 Detailed Terminal Descriptions

Please see Table 2−6 through Table 2−24 for more detailed terminal descriptions. The following list defines the column headings and the abbreviations used in the detailed terminal description tables.

- I/O Type:
  - I = Digital input
  - O = Digital output
  - I/O = Digital input/output
  - AI = Analog input
  - PWR = Power
  - GND = Ground
- Input/Output Description:
  - AF = Analog feedthrough
  - TTLI1 = 5-V tolerant TTL input buffer
  - TTLI2 = 5-V tolerant TTL input buffer with hysteresis
  - TTLO1 = 5-V tolerant low−noise 4−mA TTL output buffer
  - PCII1 = 3.3-V PCI input buffer
  - PCII3 = Universal 5-V tolerant PCI input buffer
  - PCII4 = 5-V tolerant PCMCIA input buffer
  - PCII5 = 5-V Smart Card input buffer
  - PCII6 = 5-V tolerant PCMCIA input buffer, failsafe
  - PCII7 = 5-V tolerant PCIMCIA input buffer
  - PCIO1 = 3.3-V PCI output buffer
  - PCIO3 = Universal 5-V tolerant PCI output buffer
  - PCIO4 = 5-V tolerant PCMCIA output buffer
  - PCIO5 = 5-V Smart Card output buffer
  - PCIO6 = 5-V Smart Card output buffer
  - PCIO7 = 5-V tolerant PCMCIA output buffer
  - PCIO8 = 5-V Smart Card output buffer
  - LVCI1 = LVCMOS input buffer
  - LVCI2 = LVCMOS input buffer with hysteresis, failsafe
  - LVCI3 = LVCMOS input buffer with hysteresis
  - LVCO1 = Low-noise 4-mA LVCMOS output buffer
  - LVCO2 = Low-noise 4-mA LVCMOS open drain output buffer
  - LVCO3 = Low-noise 8-mA LVCMOS output buffer
  - TP = 1394a transceiver
- PU/PD signifies whether the terminal has an internal pullup or pulldown resistor. These pullups are disabled and enabled by design when appropriate to preserve power.
  - PD1 = 20-µA pulldown
  - PD2 = 100-µA pulldown
  - PU2 = 100-µA pullup
  - PU4 = 5-V tolerant 100-µA pullup
  - PU5 = 100-µA pullup

- SW1 = Switchable 50-µA pullup/200-µA pulldown implemented depending on situation
- SW2 = Switchable 100-µA pullup/100-µA pulldown implemented depending on situation
- SW3 = Switchable 200-µA pullup/200-µA pulldown implemented depending on situation

- Power Rail signifies which rail the terminal is clamped to for protection.
- External Components signifies any external components needed for normal operation.
- Pin Strapping (If Unused) signifies how the terminal must be implemented if its function is not needed.

The terminals are grouped in tables by functionality, such as PCI system function, power-supply function, etc. The terminal numbers are also listed for convenient reference.

Table 2−6. Power Supply Terminals

Output description, internal pullup/pulldown resistors, and the power rail designation are not applicable for the power supply terminals.

TERMINAL		DESCRIPTION	I/O TYPE	INPUT	EXTERNAL COMPONENTS	PIN STRAPPING (IF UNUSED)
NAME	NUMBER					
AGND	R14, U13, U14	Analog circuit ground terminals	GND			NA
AVDD_33	P13, P14, U15	Analog circuit power terminals. A parallel combination of high frequency decoupling capacitors near each terminal is suggested, such as 0.1 µF and 0.001 µF. Lower frequency 10-µF filtering capacitors are also recommended. These supply terminals are separated from VDDPLL_33 internal to the controller to provide noise isolation. They must be tied to a low-impedance point on the circuit board.	GND		0.1-µF, 0.001-µF, and 10-µF capacitors tied to AGND	NA
GND	F07, F10, F13, G14, H06, K06, K14, M14, N06, P07, P09	Digital ground terminal	GND			NA
V_{CC}	F06, F09, F12, F14, J06, J14, L06, L14, P06, P08, P10	Power supply terminal for I/O and internal voltage regulator	PWR		0.1-µF and 0.001-µF decoupling capacitors	NA
VCCCB	A15, J19	Clamp voltage for PC Card interface. Matches card signaling environment, 5 V or 3.3 V	PWR		0.1-µF capacitor tied to GND	Float
V_{CCP}	P01, W08	Clamp voltage for PCI and miscellaneous I/O, 5 V or 3.3 V	PWR			NA
VDDPLL_15	P15	1.5-V PLL circuit power terminal. An external capacitor (0.1 µF recommended) must be placed between terminals T18 and R17 (VSSPLL) when the internal voltage regulator is enabled ($\overline{VR_EN}$ = 0 V). When the internal voltage regulator is disabled, 1.5-V must be supplied to this terminal and a parallel combination of high frequency decoupling capacitors near the terminal is suggested, such as 0.1 µF and 0.001 µF. Lower frequency 10-µF filtering capacitors are also recommended.			0.1-µF, 0.001-µF, and 10-µF capacitors tied to VSSPLL	NA
VDDPLL_33	U19	3.3-V PLL circuit power terminal. A parallel combination of high frequency decoupling capacitors near the terminal is suggested, such as 0.1 µF and 0.001 µF. Lower frequency 10-µF filtering capacitors are also recommended. This supply terminal is separated from AVDD internal to the controller to provide noise isolation. It must be tied to a low-impedance point on the circuit board. When the internal voltage regulator is disabled ($\overline{VR_EN}$ = 3.3 V), no voltage is required to be supplied to this terminal.	PWR		0.1-µF, 0.001-µF, and 10-µF capacitors tied to VSSPLL	NA
$\overline{VR_EN}$	K02	Internal voltage regulator enable. Active low	AF		Pulled directly to GND	NA
VSSPLL	R17	PLL circuit ground terminal. This terminal must be tied to the low-impedance circuit board ground plane.	GND			NA
VR_PORT	K01, K19	1.5-V output from the internal voltage regulator	PWR		0.1-µF capacitor tied to GND	NA

Table 2−7. Serial PC Card Power Switch Terminals

Internal pullup/pulldown resistors, power rail designation, and pin strapping are not applicable for the power switch terminals.

TERMINAL		DESCRIPTION	I/O TYPE	INPUT	OUTPUT	EXTERNAL COMPONENTS
NAME	NO.					
CLOCK	A09	Power switch clock. Information on the DATA line is sampled at the rising edge of CLOCK. CLOCK defaults to an input, but can be changed to an output by using bit 27 (P2CCLK) in the system control register (offset 80h, see Section 4.29).	I/O	TTLI1	TTLO1	PCMCIA power switch
DATA	B09	Power switch data. DATA is used to communicate socket power control information serially to the power switch.	O		LVCO1	PCMCIA power switch
LATCH	C09	Power switch latch. LATCH is asserted by the controller to indicate to the power switch that the data on the DATA line is valid.	O		LVCO1	PCMCIA power switch

Table 2−8. Parallel PC Card Power Switch Terminals

Internal pullup/pulldown resistors, power rail designation, and pin strapping are not applicable for the power switch terminals.

TERMINAL		I/O	DESCRIPTION	INPUT	OUTPUT
NAME	NO.				
VD1/$\overline{\text{VCCD0}}$ VD0/$\overline{\text{VCCD1}}$	A09 C04	I/O	Logic controls to the TPS2211A PC Card power interface switch to control V_{CCCB}. RSVD/VD0/$\overline{\text{VCCD1}}$ (terminal C04) controls the power switch interface mode. If it is pulled up, the power switch interface uses the 3-pin serial power interface. If it is pulled down, the power switch interface uses the 4-pin parallel power switch interface.	TTLI1 LVCI1	TTLO1 LVCO1
VD3/VPPD0 VD2/VPPD1	C09 B09	O	Logic controls to the TPS2211A PC Card power interface switch to control VPP		LVCO1 LVCO1

Table 2−9. PCI System Terminals

Internal pullup/pulldown resistors and pin strapping are not applicable for the PCI terminals.

TERMINAL		DESCRIPTION	I/O TYPE	INPUT	POWER RAIL	EXTERNAL COMPONENTS
NAME	NO.					
$\overline{\text{GRST}}$	K05	Global reset. When the global reset is asserted, the $\overline{\text{GRST}}$ signal causes the controller to place all output buffers in a high-impedance state and reset all internal registers. When $\overline{\text{GRST}}$ is asserted, the controller is completely in its default state. For systems that require wake-up from D3, $\overline{\text{GRST}}$ is normally asserted only during initial boot. $\overline{\text{PRST}}$ must be asserted following initial boot so that PME context is retained when transitioning from D3 to D0. For systems that do not require wake-up from D3, $\overline{\text{GRST}}$ must be tied to $\overline{\text{PRST}}$. When the $\overline{\text{SUSPEND}}$ mode is enabled, the controller is protected from the $\overline{\text{GRST}}$, and the internal registers are preserved. All outputs are placed in a high-impedance state, but the contents of the registers are preserved.	I	LVCI2		Power-on reset or tied to $\overline{\text{PRST}}$
PCLK	L01	PCI bus clock. PCLK provides timing for all transactions on the PCI bus. All PCI signals are sampled at the rising edge of PCLK.	I	PCII3	V_{CCP}	
$\overline{\text{PRST}}$	K03	PCI bus reset. When the PCI bus reset is asserted, $\overline{\text{PRST}}$ causes the controller to place all output buffers in a high-impedance state and reset some internal registers. When $\overline{\text{PRST}}$ is asserted, the controller is completely nonfunctional. After $\overline{\text{PRST}}$ is deasserted, the controller is in a default state. When $\overline{\text{SUSPEND}}$ and $\overline{\text{PRST}}$ are asserted, the controller is protected from $\overline{\text{PRST}}$ clearing the internal registers. All outputs are placed in a high-impedance state, but the contents of the registers are preserved.	I	PCII3	V_{CCP}	

Table 2−10. PCI Address and Data Terminals

Internal pullup/pulldown resistors and pin strapping are not applicable for the PCI address and data terminals.

TERMINAL		DESCRIPTION	I/O TYPE	INPUT	OUTPUT	POWER RAIL
NAME	NO.					
AD31	M01	PCI address/data bus. These signals make up the multiplexed PCI address and data bus on the primary interface. During the address phase of a primary-bus PCI cycle, AD31−AD0 contain a 32-bit address or other destination information. During the data phase, AD31−AD0 contain data.	I/O	PCII3	PCIO3	V_{CCP}
AD30	M02					
AD29	M03					
AD28	M06					
AD27	M05					
AD26	N01					
AD25	N02					
AD24	N03					
AD23	P03					
AD22	R01					
AD21	R02					
AD20	P05					
AD19	R03					
AD18	T01					
AD17	T02					
AD16	W04					
AD15	W07					
AD14	R08					
AD13	U08					
AD12	V08					
AD11	W09					
AD10	V09					
AD09	U09					
AD08	R09					
AD07	V10					
AD06	U10					
AD05	R10					
AD04	W11					
AD03	V11					
AD02	U11					
AD01	P11					
AD00	R11					
C/$\overline{BE3}$	P02	PCI-bus commands and byte enables. These signals are multiplexed on the same PCI terminals. During the address phase of a primary-bus PCI cycle, C/$\overline{BE3}$−C/$\overline{BE0}$ define the bus command. During the data phase, this 4-bit bus is used as a byte enable. The byte enable determines which byte paths of the full 32-bit data bus carry meaningful data. C/$\overline{BE0}$ applies to byte 0 (AD7−AD0), C/$\overline{BE1}$ applies to byte 1 (AD15−AD8), C/$\overline{BE2}$ applies to byte 2 (AD23−AD16), and C/$\overline{BE3}$ applies to byte 3 (AD31−AD24).	I/O	PCII3	PCIO3	V_{CCP}
C/$\overline{BE2}$	U05					
C/$\overline{BE1}$	V07					
C/$\overline{BE0}$	W10					
PAR	U07	PCI-bus parity. In all PCI-bus read and write cycles, the controller calculates even parity across the AD31−AD0 and C/$\overline{BE3}$−C/$\overline{BE0}$ buses. As an initiator during PCI cycles, the controller outputs this parity indicator with a one-PCLK delay. As a target during PCI cycles, the controller compares its calculated parity to the parity indicator of the initiator. A compare error results in the assertion of a parity error ($\overline{PERR}$).	I/O	PCII3	PCIO3	V_{CCP}

Table 2−11. PCI Interface Control Terminals

Internal pullup/pulldown resistors and pin strapping are not applicable for the PCI interface control terminals.

TERMINAL		DESCRIPTION	I/O TYPE	INPUT	OUTPUT	POWER RAIL	EXTERNAL COMPONENTS
NAME	NO.						
$\overline{\text{DEVSEL}}$	U06	PCI device select. The controller asserts $\overline{\text{DEVSEL}}$ to claim a PCI cycle as the target device. As a PCI initiator on the bus, the controller monitors $\overline{\text{DEVSEL}}$ until a target responds. If no target responds before timeout occurs, then the controller terminates the cycle with an initiator abort.	I/O	PCII3	PCIO3	V_{CCP}	Pullup resistor per PCI specification
$\overline{\text{FRAME}}$	R06	PCI cycle frame. $\overline{\text{FRAME}}$ is driven by the initiator of a bus cycle. $\overline{\text{FRAME}}$ is asserted to indicate that a bus transaction is beginning, and data transfers continue while this signal is asserted. When $\overline{\text{FRAME}}$ is deasserted, the PCI bus transaction is in the final data phase.	I/O	PCII3	PCIO3	V_{CCP}	Pullup resistor per PCI specification
$\overline{\text{GNT}}$	L02	PCI bus grant. $\overline{\text{GNT}}$ is driven by the PCI bus arbiter to grant the controller access to the PCI bus after the current data transaction has completed. $\overline{\text{GNT}}$ may or may not follow a PCI bus request, depending on the PCI bus parking algorithm.	I	PCII3		V_{CCP}	
IDSEL	N05	Initialization device select. IDSEL selects the controller during configuration space accesses. IDSEL can be connected to one of the upper 24 PCI address lines on the PCI bus.	I	PCII3		V_{CCP}	
$\overline{\text{IRDY}}$	V05	PCI initiator ready. $\overline{\text{IRDY}}$ indicates the ability of the PCI bus initiator to complete the current data phase of the transaction. A data phase is completed on a rising edge of PCLK where both $\overline{\text{IRDY}}$ and $\overline{\text{TRDY}}$ are asserted. Until $\overline{\text{IRDY}}$ and $\overline{\text{TRDY}}$ are both sampled asserted, wait states are inserted.	I/O	PCII3	PCIO3	V_{CCP}	Pullup resistor per PCI specification
$\overline{\text{PERR}}$	R07	PCI parity error indicator. $\overline{\text{PERR}}$ is driven by a PCI controller to indicate that calculated parity does not match PAR when $\overline{\text{PERR}}$ is enabled through bit 6 of the command register (PCI offset 04h, see Section 4.4).	I/O	PCII3	PCIO3	V_{CCP}	Pullup resistor per PCI specification
$\overline{\text{REQ}}$	L03	PCI bus request. $\overline{\text{REQ}}$ is asserted by the controller to request access to the PCI bus as an initiator.	O		PCIO3	V_{CCP}	
$\overline{\text{SERR}}$	W06	PCI system error. $\overline{\text{SERR}}$ is an output that is pulsed from the controller when enabled through bit 8 of the command register (PCI offset 04h, see Section 4.4) indicating a system error has occurred. The controller need not be the target of the PCI cycle to assert this signal. When $\overline{\text{SERR}}$ is enabled in the command register, this signal also pulses, indicating that an address parity error has occurred on a CardBus interface.	O		PCIO3	V_{CCP}	Pullup resistor per PCI specification
$\overline{\text{STOP}}$	V06	PCI cycle stop signal. $\overline{\text{STOP}}$ is driven by a PCI target to request the initiator to stop the current PCI bus transaction. $\overline{\text{STOP}}$ is used for target disconnects and is commonly asserted by target devices that do not support burst data transfers.	I/O	PCII3	PCIO3	V_{CCP}	Pullup resistor per PCI specification
$\overline{\text{TRDY}}$	W05	PCI target ready. $\overline{\text{TRDY}}$ indicates the ability of the primary bus target to complete the current data phase of the transaction. A data phase is completed on a rising edge of PCLK when both $\overline{\text{IRDY}}$ and $\overline{\text{TRDY}}$ are asserted. Until both $\overline{\text{IRDY}}$ and $\overline{\text{TRDY}}$ are asserted, wait states are inserted.	I/O	PCII3	PCIO3	V_{CCP}	Pullup resistor per PCI specification

Table 2−12. Multifunction and Miscellaneous Terminals

The power rail designation is not applicable for the multifunction and miscellaneous terminals.

TERMINAL		DESCRIPTION	I/O TYPE	INPUT	OUTPUT	PU/ PD	EXTERNAL COMPONENTS	PIN STRAPPING (IF UNUSED)
NAME	NO.							
CLK_48	F01	A 48-MHz clock must be connected to this terminal.	I	LVCI1			48 MHz clock source	
MFUNC0	G01	Multifunction terminals 0−6. See Section 4.35, *Multifunction Routing Status Register*, for configuration details.	I/O	PCII3	PCIO3			10-kΩ to 47-kΩ pullup resistor
MFUNC1	H05		I/O	PCII3	PCIO3			10-kΩ to 47-kΩ pullup resistor
MFUNC2	H02		I/O	PCII3	PCIO3			10-kΩ to 47-kΩ pullup resistor
MFUNC3	H01		I/O	PCII3	PCIO3			10-kΩ to 47-kΩ pullup resistor
MFUNC4	J01		I/O	PCII3	PCIO3			10-kΩ to 47-kΩ pullup resistor
MFUNC5	J02		I/O	PCII3	PCIO3			10-kΩ to 47-kΩ pullup resistor
MFUNC6	J03		I/O	PCII3	PCIO3			10-kΩ to 47-kΩ pullup resistor
PHY_TEST_MA	P17	PHY test pin. Not for customer use. It must be pulled high with a 4.7-kΩ resistor.	I	LCVI1		PU2		NA
$\overline{\text{RI_OUT}}$ / $\overline{\text{PME}}$	L05	Ring indicate out and power management event output. This terminal provides an output for ring-indicate or $\overline{\text{PME}}$ signals.	O		LVCO2		Pullup resistor per PCI specification	NA
SCL	G02	Serial clock. At $\overline{\text{PRST}}$, the SCL signal is sampled to determine if a two-wire serial ROM is present. If the serial ROM is detected, then this terminal provides the serial clock signaling and is implemented as open-drain. For normal operation (a ROM is implemented in the design), this terminal must be pulled high to the ROM V_{DD} with a 2.7-kΩ resistor. Otherwise, it must be pulled low to ground with a 220-Ω resistor.	I/O	TTLI1	TTLO2		Pullup resistor per I^2C specification (value depends on EEPROM, typically 2.7 kΩ)	Tie to GND if not using EEPROM
SDA	G03	Serial data. This terminal is implemented as open-drain, and for normal operation (a ROM is implemented in the design), this terminal must be pulled high to the ROM V_{DD} with a 2.7-kΩ resistor. Otherwise, it must be pulled low to ground with a 220-Ω resistor.	I/O	TTLI1	TTLO2		Pullup resistor per I^2C specification (value depends on EEPROM, typically 2.7 kΩ)	Tie to GND if not using EEPROM
SPKROUT	H03	Speaker output. SPKROUT is the output to the host system that can carry $\overline{\text{SPKR}}$ or CAUDIO through the controller from the PC Card interface. SPKROUT is driven as the exclusive-OR combination of card $\overline{\text{SPKR}}$//CAUDIO inputs.	O		TTLO1		10-kΩ to 47-kΩ pulldown resistor	
$\overline{\text{SUSPEND}}$	J05	Suspend. $\overline{\text{SUSPEND}}$ protects the internal registers from clearing when the $\overline{\text{GRST}}$ or $\overline{\text{PRST}}$ signal is asserted. See Section 3.8.6, *Suspend Mode*, for details.	I	LVCI2			10-kΩ to 47-kΩ pullup resistor	10-kΩ to 47-kΩ pullup resistor
TEST0	P12	Terminal TEST0 is used for factory test of the controller and must be connected to ground for normal operation.	I/O	LVCI1		PD1		Tie to GND
$\overline{\text{USB_EN}}$	E10	USB enable. ThIs output terminal controlS an external CBT switch for the socket when an USB card is inserted into the socket.	O		LVCO1		CBT switch	Float

Table 2−13. 16-Bit PC Card Address and Data Terminals †

External components are not applicable for the 16-bit PC Card address and data terminals. If any 16-bit PC Card address and data terminal is unused, then the terminal may be left floating. For input, output, pullup, and pulldown information refer to information by terminal number in Table 2−15, Table 2−16, and Table 2−17.

TERMINAL		DESCRIPTION	I/O TYPE	POWER RAIL
NAME	NO.			
A25	D19	PC Card address. 16-bit PC Card address lines. A25 is the most significant bit.	O	V_{CCCB}
A24	F15			
A23	E19			
A22	G15			
A21	F19			
A20	G18			
A19	H15			
A18	H17			
A17	H19			
A16	F18			
A15	F17			
A14	G19			
A13	H14			
A12	E18			
A11	K15			
A10	L15			
A9	J15			
A8	H18			
A7	E17			
A6	A16			
A5	E14			
A4	B15			
A3	B14			
A2	A14			
A1	C13			
A0	B13			
D15	L18	PC Card data. 16-bit PC Card data lines. D15 is the most significant bit.	I/O	V_{CCCB}
D14	M19			
D13	M17			
D12	N19			
D11	N17			
D10	C10			
D9	A10			
D8	E11			
D7	L19			
D6	M18			
D5	M15			
D4	N18			
D3	P19			
D2	B10			
D1	F11			
D0	C11			

† These terminals are reserved for the PCI7402 and PCI8402 controllers.

Table 2−14. 16-Bit PC Card Interface Control Terminals †

External components are not applicable for the 16-bit PC Card interface control terminals. If any 16-bit PC Card interface control terminal is unused, then the terminal may be left floating. For input, output, pullup, and pulldown information refer to information by terminal number in Table 2−15, Table 2−16, and Table 2−17.

TERMINAL		DESCRIPTION	I/O TYPE	POWER RAIL
NAME	NO.			
BVD1 ($\overline{\text{STSCHG}}$/$\overline{\text{RI}}$)	A12	Battery voltage detect 1. BVD1 is generated by 16-bit memory PC Cards that include batteries. BVD1 is used with BVD2 as an indication of the condition of the batteries on a memory PC Card. Both BVD1 and BVD2 are high when the battery is good. When BVD2 is low and BVD1 is high, the battery is weak and must be replaced. When BVD1 is low, the battery is no longer serviceable and the data in the memory PC Card is lost. See Section 5.6, *ExCA Card Status-Change Interrupt Configuration Register*, for enable bits. See Section 5.5, *ExCA Card Status-Change Register*, and Section 5.2, *ExCA Interface Status Register*, for the status bits for this signal. Status change. $\overline{\text{STSCHG}}$ alerts the system to a change in the READY, write protect, or battery voltage dead condition of a 16-bit I/O PC Card. Ring indicate. $\overline{\text{RI}}$ is used by 16-bit modem cards to indicate a ring detection.	I	V_{CCCB}
BVD2 ($\overline{\text{SPKR}}$)	B12	Battery voltage detect 2. BVD2 is generated by 16-bit memory PC Cards that include batteries. BVD2 is used with BVD1 as an indication of the condition of the batteries on a memory PC Card. Both BVD1 and BVD2 are high when the battery is good. When BVD2 is low and BVD1 is high, the battery is weak and must be replaced. When BVD1 is low, the battery is no longer serviceable and the data in the memory PC Card is lost. See Section 5.6, *ExCA Card Status-Change Interrupt Configuration Register*, for enable bits. See Section 5.5, *ExCA Card Status-Change Register*, and Section 5.2, *ExCA Interface Status Register*, for the status bits for this signal. Speaker. $\overline{\text{SPKR}}$ is an optional binary audio signal available only when the card and socket have been configured for the 16-bit I/O interface. The audio signals from cards A and B are combined by the controller and are output on SPKROUT. DMA request. BVD2 can be used as the DMA request signal during DMA operations to a 16-bit PC Card that supports DMA. The PC Card asserts BVD2 to indicate a request for a DMA operation.	I	V_{CCCB}
$\overline{\text{CD1}}$ $\overline{\text{CD2}}$	N15 B11	Card detect 1 and card detect 2. $\overline{\text{CD1}}$ and $\overline{\text{CD2}}$ are internally connected to ground on the PC Card. When a PC Card is inserted into a socket, $\overline{\text{CD1}}$ and $\overline{\text{CD2}}$ are pulled low. For signal status, see Section 5.2, *ExCA Interface Status Register*.	I	
$\overline{\text{CE1}}$ $\overline{\text{CE2}}$	L17 K18	Card enable 1 and card enable 2. $\overline{\text{CE1}}$ and $\overline{\text{CE2}}$ enable even- and odd-numbered address bytes. $\overline{\text{CE1}}$ enables even-numbered address bytes, and $\overline{\text{CE2}}$ enables odd-numbered address bytes.	O	V_{CCCB}
$\overline{\text{INPACK}}$	C14	Input acknowledge. $\overline{\text{INPACK}}$ is asserted by the PC Card when it can respond to an I/O read cycle at the current address. DMA request. $\overline{\text{INPACK}}$ can be used as the DMA request signal during DMA operations from a 16-bit PC Card that supports DMA. If it is used as a strobe, then the PC Card asserts this signal to indicate a request for a DMA operation.	I	V_{CCCB}
$\overline{\text{IORD}}$	J18	I/O read. $\overline{\text{IORD}}$ is asserted by the controller to enable 16-bit I/O PC Card data output during host I/O read cycles. DMA write. $\overline{\text{IORD}}$ is used as the DMA write strobe during DMA operations from a 16-bit PC Card that supports DMA. The controller asserts $\overline{\text{IORD}}$ during DMA transfers from the PC Card to host memory.	O	V_{CCCB}
$\overline{\text{IOWR}}$	J17	I/O write. $\overline{\text{IOWR}}$ is driven low by the controller to strobe write data into 16-bit I/O PC Cards during host I/O write cycles. DMA read. $\overline{\text{IOWR}}$ is used as the DMA write strobe during DMA operations from a 16-bit PC Card that supports DMA. The controller asserts $\overline{\text{IOWR}}$ during transfers from host memory to the PC Card.	O	V_{CCCB}

† These terminals are reserved for the PCI7402 and PCI8402 controllers.

Table 2−14. 16-Bit PC Card Interface Control Terminals (Continued) †

TERMINAL NAME	TERMINAL NO.	DESCRIPTION	I/O TYPE	POWER RAIL
$\overline{OE}$	K17	Output enable. $\overline{OE}$ is driven low by the controller to enable 16-bit memory PC Card data output during host memory read cycles. DMA terminal count. $\overline{OE}$ is used as terminal count (TC) during DMA operations to a 16-bit PC Card that supports DMA. The controller asserts $\overline{OE}$ to indicate TC for a DMA write operation.	O	V_{CCCB}
READY ($\overline{IREQ}$)	E12	Ready. The ready function is provided when the 16-bit PC Card and the host socket are configured for the memory-only interface. READY is driven low by 16-bit memory PC Cards to indicate that the memory card circuits are busy processing a previous write command. READY is driven high when the 16-bit memory PC Card is ready to accept a new data transfer command. Interrupt request. $\overline{IREQ}$ is asserted by a 16-bit I/O PC Card to indicate to the host that a controller on the 16-bit I/O PC Card requires service by the host software. $\overline{IREQ}$ is high (deasserted) when no interrupt is requested.	I	V_{CCCB}
$\overline{REG}$	E13	Attribute memory select. $\overline{REG}$ remains high for all common memory accesses. When $\overline{REG}$ is asserted, access is limited to attribute memory ($\overline{OE}$ or $\overline{WE}$ active) and to the I/O space ($\overline{IORD}$ or $\overline{IOWR}$ active). Attribute memory is a separately accessed section of card memory and is generally used to record card capacity and other configuration and attribute information. DMA acknowledge. $\overline{REG}$ is used as a DMA acknowledge (DACK) during DMA operations to a 16-bit PC Card that supports DMA. The controller asserts $\overline{REG}$ to indicate a DMA operation. $\overline{REG}$ is used in conjunction with the DMA read ($\overline{IOWR}$) or DMA write ($\overline{IORD}$) strobes to transfer data.	O	V_{CCCB}
RESET	C15	PC Card reset. RESET forces a hard reset to a 16-bit PC Card.	O	V_{CCCB}
$\overline{VS1}$ $\overline{VS2}$	A13 B16	Voltage sense 1 and voltage sense 2. $\overline{VS1}$ and $\overline{VS2}$, when used in conjunction with each other, determine the operating voltage of the PC Card.	I/O	V_{CCCB}
$\overline{WAIT}$	C12	Bus cycle wait. $\overline{WAIT}$ is driven by a 16-bit PC Card to extend the completion of the memory or I/O cycle in progress.	I	V_{CCCB}
$\overline{WE}$	G17	Write enable. $\overline{WE}$ is used to strobe memory write data into 16-bit memory PC Cards. $\overline{WE}$ is also used for memory PC Cards that employ programmable memory technologies. DMA terminal count. $\overline{WE}$ is used as a TC during DMA operations to a 16-bit PC Card that supports DMA. The controller asserts $\overline{WE}$ to indicate the TC for a DMA read operation.	O	V_{CCCB}
WP ($\overline{IOIS16}$)	A11	Write protect. WP applies to 16-bit memory PC Cards. WP reflects the status of the write-protect switch on 16-bit memory PC Cards. For 16-bit I/O cards, WP is used for the 16-bit port ($\overline{IOIS16}$) function. I/O is 16 bits. $\overline{IOIS16}$ applies to 16-bit I/O PC Cards. $\overline{IOIS16}$ is asserted by the 16-bit PC Card when the address on the bus corresponds to an address to which the 16-bit PC Card responds, and the I/O port that is addressed is capable of 16-bit accesses. DMA request. WP can be used as the DMA request signal during DMA operations to a 16-bit PC Card that supports DMA. If used, then the PC Card asserts WP to indicate a request for a DMA operation.	I	V_{CCCB}

† These terminals are reserved for the PCI7402 and PCI8402 controllers.

Table 2−15. CardBus PC Card Interface System Terminals †

A 33-Ω to 47-Ω series damping resistor (per PC Card specification) is the only external component needed for terminal C16 (CCLK). If any CardBus PC Card interface system terminal is unused, then the terminal may be left floating.

TERMINAL NAME	TERMINAL NO.	DESCRIPTION	I/O TYPE	INPUT	OUTPUT	PU/PD	POWER RAIL
CCLK	F18	CardBus clock. CCLK provides synchronous timing for all transactions on the CardBus interface. All signals except $\overline{CRST}$, $\overline{CCLKRUN}$, $\overline{CINT}$, CSTSCHG, CAUDIO, $\overline{CCD2}$, $\overline{CCD1}$, CVS2, and CVS1 are sampled on the rising edge of CCLK, and all timing parameters are defined with the rising edge of this signal. CCLK operates at the PCI bus clock frequency, but it can be stopped in the low state or slowed down for power savings.	O		PCIO3		V_{CCCB}
$\overline{CCLKRUN}$	A11	CardBus clock run. $\overline{CCLKRUN}$ is used by a CardBus PC Card to request an increase in the CCLK frequency, and by the controller to indicate that the CCLK frequency is going to be decreased.	I/O	PCII4	PCIO4	PU3	V_{CCCB}
$\overline{CRST}$	C15	CardBus reset. $\overline{CRST}$ brings CardBus PC Card-specific registers, sequencers, and signals to a known state. When $\overline{CRST}$ is asserted, all CardBus PC Card signals are placed in a high-impedance state, and the controller drives these signals to a valid logic level. Assertion can be asynchronous to CCLK, but deassertion must be synchronous to CCLK.	O	PCII4	PCIO4	PU3	V_{CCCB}

† These terminals are reserved for the PCI7402 and PCI8402 controllers.

Table 2−16. CardBus PC Card Address and Data Terminals †

External components are not applicable for the 16-bit PC Card address and data terminals. If any CardBus PC Card address and data terminal is unused, then the terminal may be left floating.

TERMINAL		DESCRIPTION	I/O TYPE	INPUT	OUTPUT	POWER RAIL
NAME	NO.					
CAD31 CAD30 CAD29 CAD28 CAD27 CAD26 CAD25 CAD24 CAD23 CAD22 CAD21 CAD20 CAD19 CAD18 CAD17 CAD16 CAD15 CAD14 CAD13 CAD12 CAD11 CAD10 CAD9 CAD8 CAD7 CAD6 CAD5 CAD4 CAD3 CAD2 CAD1 CAD0	C10 A10 F11 E11 C11 B13 C13 A14 B14 B15 E14 A16 D19 E17 F15 H19 J17 J15 J18 K15 K17 K18 L15 L18 L19 M17 M18 N19 M15 N17 N18 P19	CardBus address and data. These signals make up the multiplexed CardBus address and data bus on the CardBus interface. During the address phase of a CardBus cycle, CAD31−CAD0 contain a 32-bit address. During the data phase of a CardBus cycle, CAD31−CAD0 contain data. CAD31 is the most significant bit.	I/O	PCII7	PCIO7	V_{CCCB}
CC/$\overline{BE3}$ CC/$\overline{BE2}$ CC/$\overline{BE1}$ CC/$\overline{BE0}$	E13 E18 H18 L17	CardBus bus commands and byte enables. CC/$\overline{BE3}$−CC/$\overline{BE0}$ are multiplexed on the same CardBus terminals. During the address phase of a CardBus cycle, CC/$\overline{BE3}$−CC/$\overline{BE0}$ define the bus command. During the data phase, this 4-bit bus is used as byte enables. The byte enables determine which byte paths of the full 32-bit data bus carry meaningful data. CC/$\overline{BE0}$ applies to byte 0 (CAD7−CAD0), CC/$\overline{BE1}$ applies to byte 1 (CAD15−CAD8), CC/$\overline{BE2}$ applies to byte 2 (CAD23−CAD16), and CC/$\overline{BE3}$ applies to byte 3 (CAD31−CAD24).	I/O	PCII7	PCIO7	V_{CCCB}
CPAR	H14	CardBus parity. In all CardBus read and write cycles, the controller calculates even parity across the CAD and CC/$\overline{BE}$ buses. As an initiator during CardBus cycles, the controller outputs CPAR with a one-CCLK delay. As a target during CardBus cycles, the controller compares its calculated parity to the parity indicator of the initiator; a compare error results in a parity error assertion.	I/O	PCII7	PCIO7	V_{CCCB}

† These terminals are reserved for the PCI7402 and PCI8402 controllers.

Table 2−17. CardBus PC Card Interface Control Terminals †

If any CardBus PC Card interface control terminal is unused, then the terminal may be left floating.

TERMINAL		DESCRIPTION	I/O TYPE	INPUT	OUTPUT	PU/ PD	POWER RAIL
NAME	NO.						
CAUDIO	B12	CardBus audio. CAUDIO is a digital input signal from a PC Card to the system speaker. The controller supports the binary audio mode and outputs a binary signal from the card to SPKROUT.	I/O	PCII4	PCIO4	PU3	V_{CCCB}
$\overline{\text{CBLOCK}}$	H15	CardBus lock. $\overline{\text{CBLOCK}}$ is used to gain exclusive access to a target.	I/O	PCII4	PCIO4	PU3	V_{CCCB}
$\overline{\text{CCD1}}$ $\overline{\text{CCD2}}$	N15 B11	CardBus detect 1 and CardBus detect 2. $\overline{\text{CCD1}}$ and $\overline{\text{CCD2}}$ are used in conjunction with CVS1 and CVS2 to identify card insertion and interrogate cards to determine the operating voltage and card type.	I	TTLI2		PU4	
$\overline{\text{CDEVSEL}}$	F19	CardBus device select. The controller asserts $\overline{\text{CDEVSEL}}$ to claim a CardBus cycle as the target device. As a CardBus initiator on the bus, the controller monitors $\overline{\text{CDEVSEL}}$ until a target responds. If no target responds before timeout occurs, then the controller terminates the cycle with an initiator abort.	I/O	PCII4	PCIO4	PU3	V_{CCCB}
$\overline{\text{CFRAME}}$	E19	CardBus cycle frame. $\overline{\text{CFRAME}}$ is driven by the initiator of a CardBus bus cycle. $\overline{\text{CFRAME}}$ is asserted to indicate that a bus transaction is beginning, and data transfers continue while this signal is asserted. When $\overline{\text{CFRAME}}$ is deasserted, the CardBus bus transaction is in the final data phase.	I/O	PCII7	PCIO7		V_{CCCB}
$\overline{\text{CGNT}}$	G17	CardBus bus grant. $\overline{\text{CGNT}}$ is driven by the controller to grant a CardBus PC Card access to the CardBus bus after the current data transaction has been completed.	I/O	PCII7	PCIO7		V_{CCCB}
$\overline{\text{CINT}}$	E12	CardBus interrupt. $\overline{\text{CINT}}$ is asserted low by a CardBus PC Card to request interrupt servicing from the host.	I/O	PCII4	PCIO4	PU3	V_{CCCB}
$\overline{\text{CIRDY}}$	F17	CardBus initiator ready. $\overline{\text{CIRDY}}$ indicates the ability of the CardBus initiator to complete the current data phase of the transaction. A data phase is completed on a rising edge of CCLK when both $\overline{\text{CIRDY}}$ and $\overline{\text{CTRDY}}$ are asserted. Until $\overline{\text{CIRDY}}$ and $\overline{\text{CTRDY}}$ are both sampled asserted, wait states are inserted.	I/O	PCII4	PCIO4	PU3	V_{CCCB}
$\overline{\text{CPERR}}$	G19	CardBus parity error. $\overline{\text{CPERR}}$ reports parity errors during CardBus transactions, except during special cycles. It is driven low by a target two clocks following the data cycle during which a parity error is detected.	I/O	PCII4	PCIO4	PU3	V_{CCCB}
$\overline{\text{CREQ}}$	C14	CardBus request. $\overline{\text{CREQ}}$ indicates to the arbiter that the CardBus PC Card desires use of the CardBus bus as an initiator.	I/O	PCII4	PCIO4	PU3	V_{CCCB}
$\overline{\text{CSERR}}$	C12	CardBus system error. $\overline{\text{CSERR}}$ reports address parity errors and other system errors that could lead to catastrophic results. $\overline{\text{CSERR}}$ is driven by the card synchronous to CCLK, but deasserted by a weak pullup; deassertion may take several CCLK periods. The controller can report $\overline{\text{CSERR}}$ to the system by assertion of $\overline{\text{SERR}}$ on the PCI interface.	I/O	PCII4	PCIO4	PU3	V_{CCCB}
$\overline{\text{CSTOP}}$	G18	CardBus stop. $\overline{\text{CSTOP}}$ is driven by a CardBus target to request the initiator to stop the current CardBus transaction. $\overline{\text{CSTOP}}$ is used for target disconnects, and is commonly asserted by target devices that do not support burst data transfers.	I/O	PCII4	PCIO4	PU3	V_{CCCB}
CSTSCHG	A12	CardBus status change. CSTSCHG alerts the system to a change in the card status, and is used as a wake-up mechanism.	I	PCII6		SW1	V_{CCCB}
$\overline{\text{CTRDY}}$	G15	CardBus target ready. $\overline{\text{CTRDY}}$ indicates the ability of the CardBus target to complete the current data phase of the transaction. A data phase is completed on a rising edge of CCLK, when both $\overline{\text{CIRDY}}$ and $\overline{\text{CTRDY}}$ are asserted; until this time, wait states are inserted.	I/O	PCII1	PCIO1	PU5	V_{CCCB}
CVS1 CVS2	A13 B16	CardBus voltage sense 1 and CardBus voltage sense 2. CVS1 and CVS2 are used in conjunction with $\overline{\text{CCD1}}$ and $\overline{\text{CCD2}}$ to identify card insertion and interrogate cards to determine the operating voltage and card type.	I/O	TTLI2	TTLO1	PU4	V_{CCCB}

† These terminals are reserved for the PCI7402 and PCI8402 controllers.

Table 2−18. Reserved Terminals

TERMINAL		DESCRIPTION	PIN STRAPPING
NAME	NUMBER		
RSVD	B10, H17, M19	Reserved (CardBus reserved)	Float

Table 2−19. IEEE 1394 Physical Layer Terminals †

Table 2−19 is only applicable to the PCI4512, PCI7402, PCI7412, PCI7612, PCI8402, and PCI8412 controllers.

TERMINAL		DESCRIPTION	I/O TYPE	INPUT	OUTPUT	EXTERNAL COMPONENTS	PIN STRAPPING (IF UNUSED)
NAME	NO.						
CPS	R12	Cable power status input. This terminal is normally connected to cable power through a 400-kΩ resistor. This circuit drives an internal comparator that is used to detect the presence of cable power. If CPS is not used to detect cable power, then this terminal must be pulled to GND.	AF			390-kΩ series resistor to BUSPOWER if providing power through the 1394 port	Tie to GND
R0 R1	T18 T19	Current-setting resistor terminals. These terminals are connected to an external resistance to set the internal operating currents and cable driver output currents. A resistance of 6.34 kΩ ±1% is required to meet the IEEE Std 1394-1995 output voltage limits.	AF			6.34-kΩ ±1% resistor between R0 and R1 per 1394 specification	Tie to GND
TPA0P TPA0N	V14 W14	Twisted-pair cable A differential signal terminals. Board trace lengths from each pair of positive and negative differential signal pins must be matched and as short as possible to the external load resistors and to the cable connector. For an unused port, TPA+ and TPA− can be left open.	I/O	TP	TP	1394 termination (see reference schematics)	Float
TPA1P TPA1N	V16 W16		I//O	TP	TP	1394 termination (see reference schematics)	Float
TPBIAS0 TPBIAS1	R13 W17	Twisted-pair bias output. This provides the 1.86-V nominal bias voltage needed for proper operation of the twisted-pair cable drivers and receivers and for signaling to the remote nodes that there is an active cable connection. Each of these pins must be decoupled with a 1.0-µF capacitor to ground.	AF			1394 termination (see reference schematics)	Float
TPB0P TPB0N	V13 W13	Twisted-pair cable B differential signal terminals. Board trace lengths from each pair of positive and negative differential signal pins must be matched and as short as possible to the external load resistors and to the cable connector. For an unused port, TPB+ and TPB− must be pulled to ground.	I/O	TP	TP	1394 termination (see reference schematics)	Float
TPB1P TPB1N	V15 W15		I/O	TP	TP	1394 termination (see reference schematics)	Float
XI XO	R19 R18	Crystal oscillator inputs. These pins connect to a 24.576-MHz parallel resonant fundamental mode crystal. The optimum values for the external shunt capacitors are dependent on the specifications of the crystal used (see Section 3.9.2, *Crystal Selection*). An external clock input can be connected to the XI terminal. When using an external clock input, the XO terminal must be left unconnected, and the clock must be supplied before the controller is taken out of reset. Refer to Section 3.9.2 for the operating characteristics of the XI terminal.	AF			24.576-MHz oscillator (see implementation guide)	Float

† These terminals are reserved for the PCI6412 and PCI6612 controllers.

Table 2−20. No Connect Terminals

TERMINAL		DESCRIPTION	PIN STRAPPING
NAME	NUMBER		
NC	U12, V12, W12	No connect. These terminals do not have a connection anywhere on this device.	Float
NC	E05	No connect. This terminal is an identification ball used for device orientation.	Float

Table 2−21. SD/MMC Terminals †

If any SD/MMC terminal is unused, then the terminal may be left floating.

TERMINAL		DESCRIPTION	I/O TYPE	INPUT	OUTPUT	PU/ PD	POWER RAIL	EXTERNAL COMPONENTS
NAME	NO.							
MC_PWR_CTRL_0 MC_PWR_CTRL_1	C08 F08	Media card power control for flash media sockets	O I/O	 LVCI1	LVCO1 LVCO1	 PU2	V_{CC} V_{CC}	Power switch or FET to turn power on to FM socket
$\overline{\text{SD_CD}}$	E09	SD/MMC card detect. This input is asserted when SD/MMC cards are inserted.	I	LVCI1	LVCO1	PU2	V_{CC}	
SD_CLK	A04 A07	SD flash clock. This output provides the SD/MMC clock, which operates at 16 MHz.	I/O	LVCI3 LVCI3	LVCO3 LVCO3	PU2	V_{CC} V_{CC}	
SD_CMD	C05, E08	SD flash command. This signal provides the SD command per the *SD Memory Card Specifications*.	I/O	LVCI1	LVCO1	SW2	V_{CC}	
SD_DAT3 SD_DAT2 SD_DAT1 SD_DAT0	E06, B06 B05, A06 A05, C07 C06, B07	SD flash data [3:0]. These signals provide the SD data path per the *SD Memory Card Specifications*.	I/O	LVCI1	LVCO1	SW2	V_{CC}	
SD_WP	E07	SD write protect data. This signal indicates that the media inserted in the socket is write protected.	I/O	LVCI1	LVCO1	PU2	V_{CC}	

† These terminals are reserved for the PCI4512 controller.

Table 2−22. Memory Stick/PRO Terminals †

If any Memory Stick/PRO terminal is unused, then the terminal may be left floating.

TERMINAL		DESCRIPTION	I/O TYPE	INPUT	OUTPUT	PU/ PD	POWER RAIL	EXTERNAL COMPONENTS
NAME	NO.							
MC_PWR_CTRL_0 MC_PWR_CTRL_1	C08 F08	Media card power control for flash media sockets	O I/O	 LVCI1	LVCO1 LVCO1	 PU2	V_{CC} V_{CC}	Power switch or FET to turn power on to FM socket
MS_BS	E08	Memory Stick bus state. This signal provides Memory Stick bus state information.	I/O	LVCI1	LVCO1	SW2	V_{CC}	
$\overline{\text{MS_CD}}$	A08	Media Card detect. This input is asserted when a Memory Stick or Memory Stick Pro media is inserted.	I	LVCI1		PU2	V_{CC}	
MS_CLK	A07	Memory Stick clock. This output provides the MS clock, which operates at 16 MHz.	I/O	LVCI3	LVCO3		V_{CC}	
MS_DATA3 MS_DATA2 MS_DATA1	B06 A06 C07	Memory Stick data [3:1]. These signals provide the Memory Stick data path.	I/O	LVCI1	LVCO1	SW2	V_{CC}	
MS_SDIO (DATA0)	B07	Memory Stick serial data I/O. This signal provides Memory Stick data input/output. Memory Stick data 0.	I/O	LVCI1	LVCO1	SW2	V_{CC}	

† These terminals are reserved for the PCI4512 controller.

Table 2−23. Smart Media/XD Terminals †

If any Smart Media/XD terminal is unused, then the terminal may be left floating.

TERMINAL		DESCRIPTION	I/O TYPE	INPUT	OUTPUT	PU/ PD	POWER RAIL	EXTERNAL PARTS
NAME	NO.							
MC_PWR_CTRL_0	C08	Media card power control for flash media sockets	O		LVCO1		V_{CC}	Power switch or FET to turn power on to FM socket
SM_ALE	C05	SmartMedia address latch enable. This signal functions as specified in the SmartMedia specification, and is used to latch addresses passed over SM_D7−SM_D0.	I/O	LVCI1	LVCO1	SW2	V_{CC}	
$\overline{\text{SM_CD}}$	B08	SmartMedia card detect. This input is asserted when SmartMedia cards are inserted.	I	LVCI1		PU2	V_{CC}	
$\overline{\text{SM_CE}}$	E07	SmartMedia card enable. This signal functions as specified in the SmartMedia specification, and is used to enable the media for a pending transaction.	I/O	LVCI1	LVCO1	PU2	V_{CC}	100-kΩ pullup resistor to V_{CC} for xD compliance
SM_CLE	B04	SmartMedia command latch enable. This signal functions as specified in the SmartMedia specification, and is used to latch commands passed over SM_D7−SM_D0.	I/O	LVCI1	LVCO1	PD2	V_{CC}	
SM_D7 SM_D6 SM_D5 SM_D4 SM_D3 SM_D2 SM_D1 SM_D0	E06 B05 A05 C06 B06 A06 C07 B07	SmartMedia data terminals. These signals pass data to and from the SmartMedia, and functions as specified in the SmartMedia specifications.	I/O	LVCI1	LVCO1	SW2	V_{CC}	
$\overline{\text{SM_EL_WP}}$	A07	SmartMedia electrical write protect	I/O	LVCI3	LVCO3		V_{CC}	
$\overline{\text{SM_PHYS_WP}}$	A03	SmartMedia physical write protect. This input comes from the write protect tab of the SmartMedia card.	I	LVCI1		PU2		
$\overline{\text{SM_RE}}$	A04	SmartMedia read enable. This signal functions as specified in the SmartMedia specification, and is used to latch a read transfer from the card.	I/O	LVCI1	LVCO1	PU2	V_{CC}	100-kΩ pullup resistor to V_{CC} for xD compliance
SM_R/$\overline{\text{B}}$	F08	SmartMedia read/busy. This signal functions as specified in the SmartMedia specification, and is used to pace data transfers to the card.	I/O	LVCI1	LVCO1	PU2	V_{CC}	10-kΩ to 47-kΩ pullup resistor to V_{CC} for xD compliance
$\overline{\text{SM_WE}}$	E08	SmartMedia write enable. This signal functions as specified in the SmartMedia specification, and is used to latch a write transfer to the card.	I/O	LVCI1	LVCO1	SW2	V_{CC}	100-kΩ pullup resistor to V_{CC} for xD compliance
$\overline{\text{XD_CD}}$	A03		I	LVCI1		PU2	V_{CC}	

† These terminals are reserved for the PCI4512 controller.

Table 2−24. Smart Card Terminals †

If any Smart Card terminal is unused, then the terminal may be left floating, except for SC_VCC_5V which must be connected to 5 V. Smart Card terminals are only functional in the PCI6612 and PCI7612 controllers.

TERMINAL		DESCRIPTION	I/O TYPE	INPUT	OUTPUT	PU/ PD	POWER RAIL	EXTERNAL PARTS
NAME	NO.							
$\overline{\text{SC_CD}}$	F03	Smart Card card detect. This input is asserted when Smart Cards are inserted.	I/O	LVCI1	LVCO1	PU2	VCC	
SC_CLK	E02	Smart Card clock. The controller drives a 3-MHz clock to the Smart Card interface when enabled.	O		PCIO8		SC_VCC_5V	Series resistor or 22 kΩ resistor to GND 68 pF capacitor to GND
SC_DATA	E01	Smart Card data input/output	I/O	PCII5	PCIO5	SW3	SC_VCC_5V	
SC_FCB	E03	Smart Card function code. The controller does not support synchronous Smart Cards as specified in ISO/IEC 7816-10, and this terminal is in a high-impedance state.	I/O	PCII5	PCIO5	SW3	SC_VCC_5V	
SC_GPIO6	C06	Smart Card general-purpose I/O terminals. These signals can be controlled by firmware and are used as control signals for an external Smart Card interface chip or level shifter.	I/O	LVCI1	LVCO1	SW2	VCC	
SC_GPIO5	A05			LVCI1	LVCO1	SW2	VCC	
SC_GPIO4	B05			LVCI1	LVCO1	SW2	VCC	
SC_GPIO3	E06			LVCI1	LVCO1	SW2	VCC	
SC_GPIO2	C05			LVCI1	LVCO1	SW2	VCC	
SC_GPIO1	A04			LVCI3	LVCO3	PU2	VCC	
SC_GPIO0	B04			LVCI3	LVCO3	PU2	VCC	
$\overline{\text{SC_OC}}$	F02	Smart Card overcurrent. This input comes from the Smart Card power switch.	I	LVCI1		PU2	VCC	
SC_PWR_CTRL	G05	Smart Card power control for the Smart Card socket	O		LVCO1		VCC	Power switch or FET to turn on power to FM socket
SC_RFU	D01	Smart Card reserved. This terminal is in a high-impedance state.	I/O	PCII5	PCIO5	SW3	SC_VCC_5V	
SC_RST	F05	Smart Card This signal starts and stops the Smart Card reset sequence. The controller asserts this reset when requested by the host.	O		PCIO6		SC_VCC_5V	
SC_VCC_5V	G06	Smart Card power terminal	PWR					

† These terminals are reserved for the PCI4512, PCI6412, PCI7402, PCI7412, PCI8402, and PCI8412 controllers.

3 Principles of Operation

The following sections give an overview of the PCIxx12 controller. Figure 3−1 shows the connections to the controller. The PCI interface includes all address/data and control signals for PCI protocol. The interrupt interface includes terminals for parallel PCI, parallel ISA, and serialized PCI and ISA signaling.

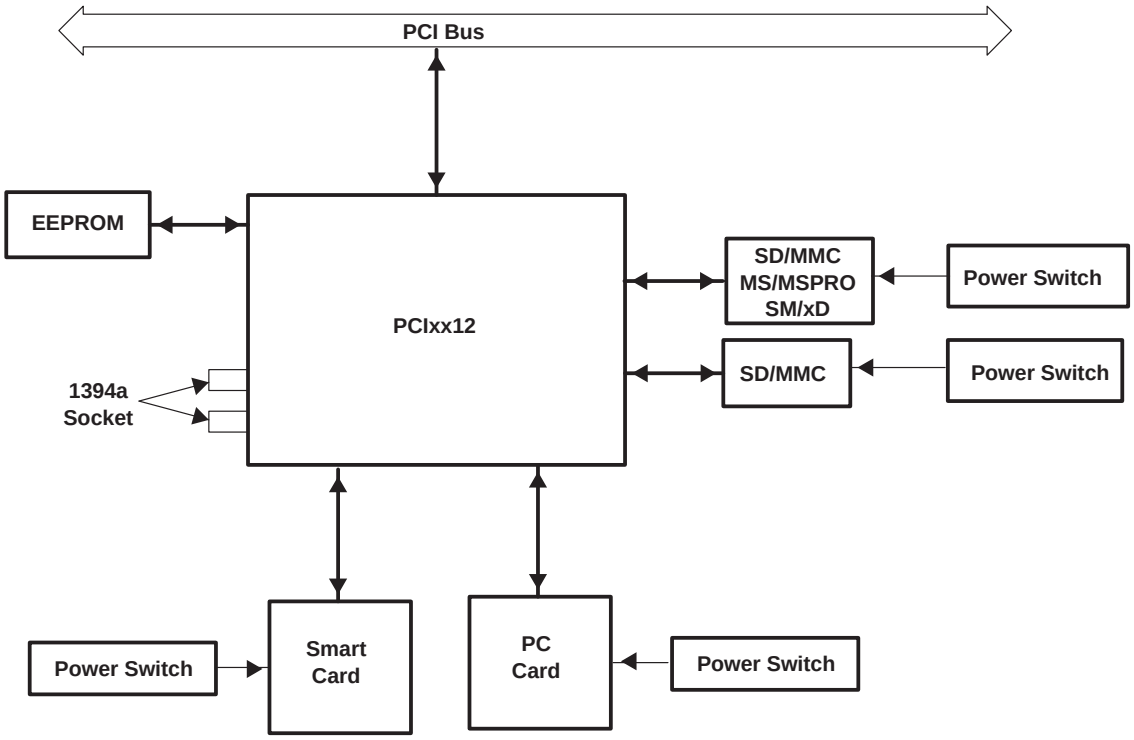

Figure 3−1. PCIxx12 System Block Diagram

3.1 Power Supply Sequencing

The PCIxx12 controller contains 3.3-V I/O buffers with 5-V tolerance requiring a core power supply and clamp voltages. The core power supply is always 1.5 V. The clamp voltages can be either 3.3 V or 5 V, depending on the interface. The following power-up and power-down sequences are recommended.

The power-up sequence is:

1. Power core 1.5 V.
2. Apply the I/O voltage.
3. Apply the analog voltage.
4. Apply the clamp voltage.

The power-down sequence is:

1. Remove the clamp voltage.
2. Remove the analog voltage.
3. Remove the I/O voltage.
4. Remove power from the core.

NOTE: If the voltage regulator is enabled, then steps 2, 3, and 4 of the power-up sequence and steps 1, 2, and 3 of the power-down sequence all occur simultaneously.

3.2 I/O Characteristics

The PCIxx12 controller meets the ac specifications of the *PC Card Standard* (release 8.1) and the *PCI Local Bus Specification.* Figure 3−2 shows a 3-state bidirectional buffer. Section 14.2, *Recommended Operating Conditions*, provides the electrical characteristics of the inputs and outputs.

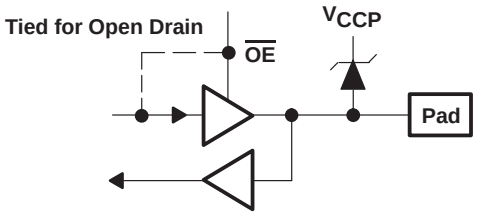

Figure 3−2. 3-State Bidirectional Buffer

3.3 Clamping Voltages

The clamping voltages are set to match whatever external environment the PCIxx12 controller is interfaced with: 3.3 V or 5 V. The I/O sites can be pulled through a clamping diode to a voltage rail that protects the core from external signals. The core power supply is 1.5 V and is independent of the clamping voltages. For example, PCI signaling can be either 3.3 V or 5 V, and the controller must reliably accommodate both voltage levels. This is accomplished by using a 3.3-V I/O buffer that is 5-V tolerant, with the applicable clamping voltage applied. If a system designer desires a 5-V PCI bus, then V_{CCP} can be connected to a 5-V power supply.

3.4 Peripheral Component Interconnect (PCI) Interface

The PCIxx12 controller is fully compliant with the *PCI Local Bus Specification*. The controller provides all required signals for PCI master or slave operation, and may operate in either a 5-V or 3.3-V signaling environment by connecting the V_{CCP} terminals to the desired voltage level. In addition to the mandatory PCI signals, the controller provides the optional interrupt signals $\overline{INTA}$, $\overline{INTB}$, $\overline{INTC}$, and $\overline{INTD}$.

3.4.1 1394 PCI Bus Master

As a bus master, the 1394 function of the PCIxx12 controller supports the memory commands specified in Table 3−1. The PCI master supports the memory read, memory read line, and memory read multiple commands. The read command usage for read transactions of greater than two data phases are determined by the selection in bits 9−8 (MR_ENHANCE field) of the PCI miscellaneous configuration register (refer to Section 7.23 for details). For read transactions of one or two data phases, a memory read command is used.

Table 3−1. PCI Bus Support

PCI	COMMAND $\overline{C/BE3}$−$\overline{C/BE0}$	OHCI MASTER FUNCTION
Memory read	0110	DMA read from memory
Memory write	0111	DMA write to memory
Memory read multiple	1100	DMA read from memory
Memory read line	1110	DMA read from memory
Memory write and invalidate	1111	DMA write to memory

3.4.2 Device Resets

The following are the requirements for proper reset of the PCIxx12 controller:

1. $\overline{\text{GRST}}$ and $\overline{\text{PRST}}$ must both be asserted at power on.
2. $\overline{\text{GRST}}$ must be asserted for at least 2 ms at power on.
3. $\overline{\text{PRST}}$ must be deasserted either at the same time or after $\overline{\text{GRST}}$ is asserted.
4. PCLK must be stable for 100 µs before $\overline{\text{PRST}}$ is deasserted.

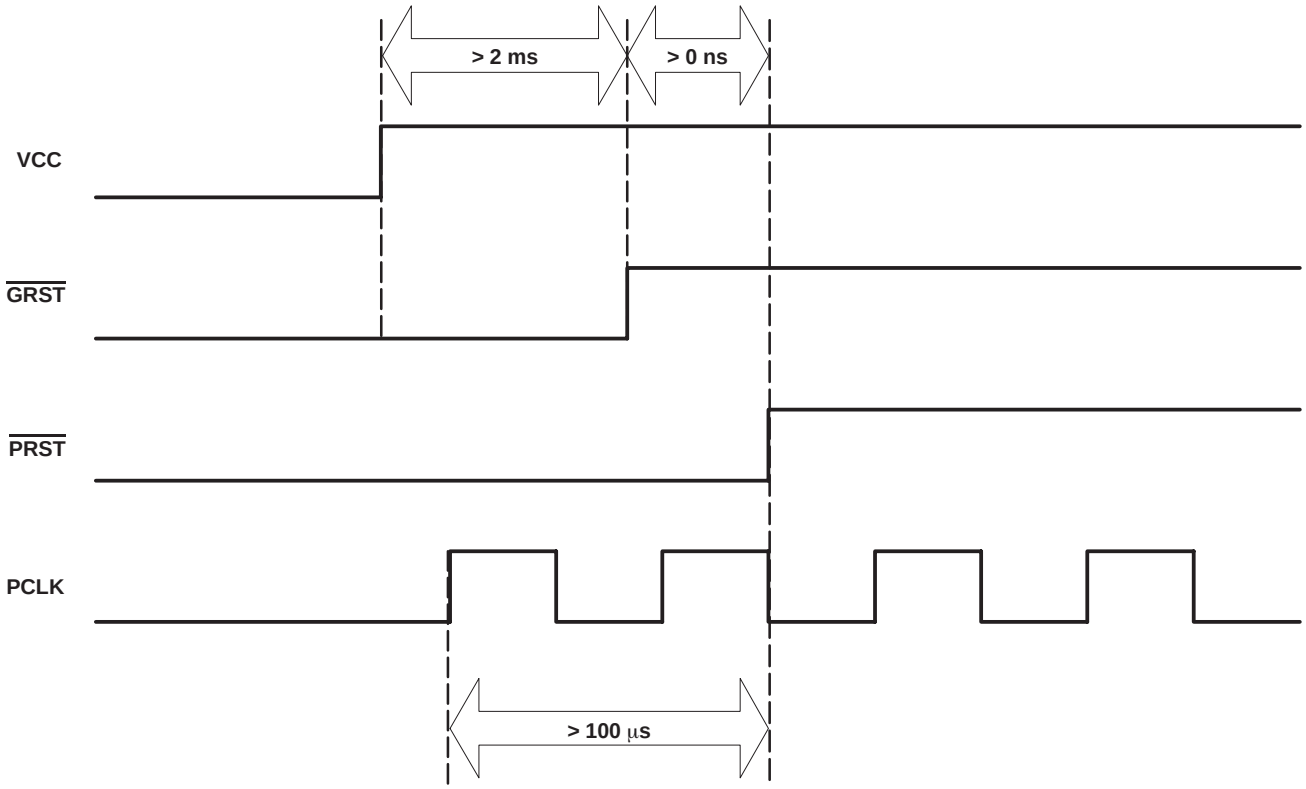

Figure 3−3. PCI Reset Requirement

3.4.3 Serial EEPROM I²C Bus

The PCIxx12 controller offers many choices for modes of operation, and these choices are selected by programming several configuration registers. For system board applications, these registers are normally programmed through the BIOS routine. For add-in card and docking-station/port-replicator applications, the controller provides a two-wire inter-integrated circuit (IIC or I^2C) serial bus for use with an external serial EEPROM.

The controller is always the bus master, and the EEPROM is always the slave. Either device can drive the bus low, but neither device drives the bus high. The high level is achieved through the use of pullup resistors on the SCL and SDA signal lines. The controller is always the source of the clock signal, SCL.

System designers who wish to load register values with a serial EEPROM must use pullup resistors on the SCL and SDA terminals. If the controller detects a logic-high level on the SCL terminal at the end of $\overline{\text{GRST}}$, then it initiates incremental reads from the external EEPROM. Any size serial EEPROM up to the I^2C limit of 16 Kbits can be used, but only the first 96 bytes (from offset 00h to offset 5Fh) are required to configure the controller. Figure 3−3 shows a serial EEPROM application.

In addition to loading configuration data from an EEPROM, the I^2C bus can be used to read and write from other I^2C serial devices. A system designer can control the I^2C bus, using the controller as bus master, by reading and writing PCI configuration registers. Setting bit 3 (SBDETECT) in the serial bus control/status register (PCI offset B3h, see Section 4.49) causes the controller to route the SDA and SCL signals to the SDA and SCL terminals, respectively. The read/write data, slave address, and byte addresses are manipulated by accessing the serial bus data, serial bus index, and serial bus slave address registers (PCI offsets B0h, B1h, and B2h; see Sections 4.46, 4.47, and 4.48, respectively).

EEPROM interface status information is communicated through the serial bus control and status register (PCI offset B3h, see Section 4.49). Bit 3 (SBDETECT) in this register indicates whether or not the serial ROM circuitry detects the pullup resistor on SCL. Any undefined condition, such as a missing acknowledge, results in bit 0 (ROM_ERR) being set. Bit 4 (ROMBUSY) is set while the subsystem ID register is loading (serial ROM interface is busy).

The subsystem vendor ID for functions 2 and 3 is also loaded through EEPROM. The EEPROM load data goes to all four functions from the serial EEPROM loader.

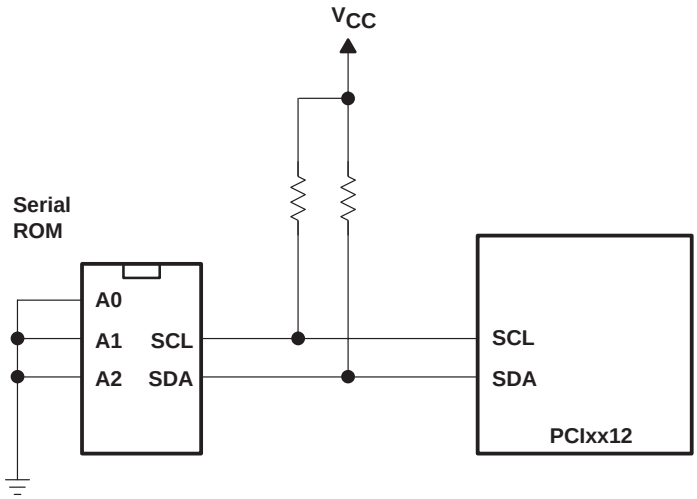

Figure 3−4. Serial ROM Application

3.4.4 Function 0 (CardBus) Subsystem Identification

The subsystem vendor ID register (PCI offset 40h, see Section 4.26) and subsystem ID register (PCI offset 42h, see Section 4.27) make up a doubleword of PCI configuration space for function 0. This doubleword register is used for system and option card (mobile dock) identification purposes and is required by some operating systems. Implementation of this unique identifier register is a *PC 99/PC 2001* requirement.

The PCIxx12 controller offers two mechanisms to load a read-only value into the subsystem registers. The first mechanism relies upon the system BIOS providing the subsystem ID value. The default access mode to the subsystem registers is read-only, but can be made read/write by clearing bit 5 (SUBSYSRW) in the system control register (PCI offset 80h, see Section 4.29). Once this bit is cleared, the BIOS can write a subsystem identification value into the registers at PCI offset 40h. The BIOS must set the SUBSYSRW bit such that the subsystem vendor ID register and subsystem ID register are limited to read-only access. This approach saves the added cost of implementing the serial electrically erasable programmable ROM (EEPROM).

In some conditions, such as in a docking environment, the subsystem vendor ID register and subsystem ID register must be loaded with a unique identifier via a serial EEPROM. The controller loads the data from the serial EEPROM after a reset of the primary bus. Note that the $\overline{\text{SUSPEND}}$ input gates the PCI reset from the entire PCIxx12 core, including the serial-bus state machine (see Section 3.8.6, *Suspend Mode*, for details on using $\overline{\text{SUSPEND}}$).

The controller provides a two-line serial-bus host controller that can interface to a serial EEPROM. See Section 3.6, *Serial EEPROM Interface*, for details on the two-wire serial-bus controller and applications.

3.4.5 Function 1 (OHCI 1394) Subsystem Identification

The subsystem identification register is used for system and option card identification purposes. This register can be initialized from the serial EEPROM or programmed via the subsystem access register at offset F8h in the PCI configuration space (see Section 7.25, *Subsystem Access Register*). See Table 7−22 for a complete description of the register contents.

Write access to the subsystem access register updates the subsystem identification registers identically to OHCI-Lynx™. The contents of the subsystem access register are aliased to the subsystem vendor ID and subsystem ID registers at Function 1 PCI offsets 2Ch and 2Eh, respectively. The system ID value written to this register may also be read back from this register. See Table 7−22 for a complete description of the register contents.

3.4.6 Function 2 (Flash Media) Subsystem Identification

The subsystem identification register is used for system and option card identification purposes. This register can be initialized from the serial EEPROM or programmed via the subsystem access register at offset 50h in the PCI configuration space (see Section 11.22, *Subsystem Access Register*). See Table 11−15 for a complete description of the register contents.

The contents of the subsystem access register are aliased to the subsystem vendor ID and subsystem ID registers at Function 2 PCI offsets 2Ch and 2Eh, respectively. See Table 11−15 for a complete description of the register contents.

3.4.7 Function 3 (SD Host) Subsystem Identification

The subsystem identification register is used for system and option card identification purposes. This register can be initialized from the serial EEPROM or programmed via the subsystem access register at offset 8Ch in the PCI configuration space (see Section 12.23, *Subsystem Access Register*). See Table 12−16 for a complete description of the register contents.

The contents of the subsystem access register are aliased to the subsystem vendor ID and subsystem ID registers at Function 3 PCI offsets 2Ch and 2Eh, respectively. See Table 12−16 for a complete description of the register contents.

3.4.8 Function 4 (Smart Card) Subsystem Identification

The subsystem identification register is used for system and option card identification purposes. This register can be initialized from the serial EEPROM or programmed via the subsystem access register at offset 50h in the PCI configuration space (see Section 13.23, *Subsystem ID Alias Register*). See Table 13−14 for a complete description of the register contents.

The contents of the subsystem access register are aliased to the subsystem vendor ID and subsystem ID registers at Function 4 PCI offsets 2Ch and 2Eh, respectively. See Table 13−14 for a complete description of the register contents.

3.5 PC Card Applications

The PCIxx12 controller supports all the PC Card features and applications as described below.

- Card insertion/removal and recognition per the *PC Card Standard* (release 8.1)
- Speaker and audio applications
- LED socket activity indicators
- PC Card controller programming model
- CardBus socket registers

3.5.1 PC Card Insertion/Removal and Recognition

The *PC Card Standard* (release 8.1) addresses the card-detection and recognition process through an interrogation procedure that the socket must initiate on card insertion into a cold, nonpowered socket. Through this interrogation, card voltage requirements and interface (CardBus versus 16-bit) are determined.

The scheme uses the card-detect and voltage-sense signals. The configuration of these four terminals identifies the card type and voltage requirements of the PC Card interface.

3.5.2 Low Voltage CardBus Card Detection

The card detection logic of the PCIxx12 controller includes the detection of Cardbus cards with V_{CC} = 3.3 V and V_{PP} = 1.8 V. The reporting of the 1.8-V CardBus card (V_{CC} = 3.3 V, V_{PP} = 1.8 V) is reported through the socket present state register as follows based on bit 10 (12V_SW_SEL) in the general control register (PCI offset 86h, see Section 4.30):

- If the 12V_SW_SEL bit is 0b (TPS2228 is used), then the 1.8-V CardBus card causes the 3VCARD bit in the socket present state register to be set.
- If the 12V_SW_SEL bit is 1b (TPS2226 is used), then the 1.8-V CardBus card causes the XVCARD bit in the socket present state register to be set.

3.5.3 PC Card Detection

The *PC Card Standard* addresses the card detection and recognition process through an interrogation procedure that the socket must initiate upon card insertion into a cold, unpowered socket. Through this interrogation, card voltage requirements and interface type (16-bit vs. CardBus) are determined. The scheme uses the CD1, CD2, VS1, and VS2 signals (CCD1, CCD2, CVS1, CVS2 for CardBus). A PC Card designer connects these four terminals in a certain configuration to indicate the type of card and its supply voltage requirements. The encoding scheme for this, defined in the *PC Card Standard*, is shown in Table 3−2. In addition, to 16-bit and CardBus cards, the controller supports the detection of USB custom cards via the custom card detection method defined by the *PC Card Standard*. Other types of custom cards are not supported and if detected the socket registers will report values as if it were empty.

Table 3−2. PC Card—Card Detect and Voltage Sense Connections

$\overline{CCD2}$//$\overline{CD2}$	$\overline{CCD1}$//$\overline{CD1}$	CVS2//$\overline{VS2}$	CVS1//$\overline{VS1}$	Key	Interface	V_{CC}	V_{PP}/V_{CORE}
Ground	Ground	Open	Open	5 V	16-bit PC Card	5 V	Per CIS (V_{PP})
Ground	Ground	Open	Ground	5 V	16-bit PC Card	5 V and 3.3 V	Per CIS (V_{PP})
Ground	Ground	Ground	Ground	5 V	16-bit PC Card	5 V, 3.3 V, and X.X V	Per CIS (V_{PP})
Ground	Ground	Open	Ground	LV	16-bit PC Card	3.3 V	Per CIS (V_{PP})
Ground	Connect to CVS1	Open	Connect to $\overline{CCD1}$	LV	CardBus PC Card	3.3 V	Per CIS (V_{PP})
Ground	Ground	Ground	Ground	LV	16-bit PC Card	3.3 V and X.X V	Per CIS (V_{PP})
Connect to CVS2	Ground	Connect to $\overline{CCD2}$	Ground	LV	CardBus PC Card	3.3 V and X.X V	Per CIS (V_{PP})
Connect to CVS1	Ground	Ground	Connect to $\overline{CCD2}$	LV	CardBus PC Card	3.3 V, X.X V, and Y.Y V	Per CIS (V_{PP})
Ground	Ground	Ground	Open	LV	16-bit PC Card	X.X V	Per CIS (V_{PP})
Connect to CVS2	Ground	Connect to $\overline{CCD2}$	Open	LV	CardBus PC Card	3.3 V	1.8 V (V_{CORE})
Ground	Connect to CVS2	Connect to $\overline{CCD1}$	Open	LV	CardBus PC Card	X.X V and Y.Y V	Per CIS (V_{PP})
Connect to CVS1	Ground	Open	Connect to $\overline{CCD2}$	LV	CardBus PC Card	Y.Y V	Per CIS (V_{PP})
Ground	Connect to CVS1	Ground	Connect to $\overline{CCD1}$	LV	UltraMedia	Per query terminals	
Ground	Connect to CVS2	Connect to CCD1	Ground	Reserved			Reserved

3.5.4 Flash Media and Smart Card Detection

The PCIxx12 controller detects flash media card insertions through the $\overline{SD_CD}$, $\overline{MS_CD}$, $\overline{SM_CD}$, and $\overline{XD_CD}$ terminals. When one of these terminals is 0b, a flash media device is inserted in the respective socket. The controller debounces these signals such that instability of the signal does not cause false card insertions. The debounce time is approximately 50 ms. The detect signals are not debounced on card removals. The filtered detect signals are used in the flash media card detection and power control logic.

The MMC/SD card detection and power control logic contains three main states:

- Socket empty, power off
- Card inserted, power off
- Card inserted, power on

The controller detects a Smart Card insertion through the $\overline{SC_CD}$ terminal. When this terminal is 0b, a Smart Card is inserted in the socket. The controller debounces the $\overline{SC_CD}$ signal such that instability of the signal does not cause false card insertions. The debounce time is approximately 50 ms. The $\overline{SC_CD}$ signal is not debounced on card removals. The filtered $\overline{SC_CD}$ signal is used in the Smart Card detection and power control logic.

The Smart Card detection and power control logic contains three main states:

- Socket empty, power off
- Card inserted, power off
- Card inserted, power on

3.5.5 Power Switch Interface

The power switch interface of the PCIxx12 controller supports either the 3-pin serial interface or the 4-pin parallel interface. The RSVD/VD0/$\overline{\text{VCCD1}}$ pin selects whether the 3-pin serial interface or the 4-pin parallel interface is used. If the RSVD/VD0/$\overline{\text{VCCD1}}$ pin is sampled high on the rising edge of $\overline{\text{GRST}}$, then the 3-pin serial interface is used. If the RSVD/VD0/$\overline{\text{VCCD1}}$ pin is sampled low on the rising edge of $\overline{\text{GRST}}$, then the 4-pin parallel interface is used. The 3-pin interface is implemented such that the controller can connect to both the TPS2226 and TPS2228 power switches. Bit 10 (12V_SW_SEL) in the general control register (PCI offset 86h, see Section 4.30) selects the power switch that is implemented. The controller defaults to use the control logic for the TPS2228 power switch. See Table 3−3 and Table 3−6 below for the power switch control logic.

Table 3−3. TPS2228 Control Logic—xVPP/VCORE

AVPP/VCORE CONTROL SIGNALS				OUTPUT V_AVPP/VCORE	BVPP/VCORE CONTROL SIGNALS				OUTPUT V_BVPP/VCORE
D8(SHDN)	D0	D1	D9		D8(SHDN)	D4	D5	D10	
1	0	0	X	0 V	1	0	0	X	0 V
1	0	1	0	3.3 V	1	0	1	0	3.3 V
1	0	1	1	5 V	1	0	1	1	5 V
1	1	0	X	Hi-Z	1	1	0	X	Hi-Z
1	1	1	0	Hi-Z	1	1	1	0	Hi-Z
1	1	1	1	1.8 V	1	1	1	1	1.8 V
0	X	X	X	Hi-Z	0	X	X	X	Hi-Z

Table 3−4. TPS2228 Control Logic—xVCC

AVCC CONTROL SIGNALS			OUTPUT V_AVCC	BVCC CONTROL SIGNALS			OUTPUT V_BVCC
D8(SHDN)	D3	D2		D8(SHDN)	D6	D7	
1	0	0	0 V	1	0	0	0 V
1	0	1	3.3 V	1	0	1	3.3 V
1	1	0	5 V	1	1	0	5 V
1	1	1	0 V	1	1	1	0 V
0	X	X	Hi-Z	0	X	X	Hi-Z

Table 3−5. TPS2226 Control Logic—xVPP

AVPP CONTROL SIGNALS				OUTPUT V_AVPP	BVPP CONTROL SIGNALS				OUTPUT V_BVPP
D8(SHDN)	D0	D1	D9		D8(SHDN)	D4	D5	D10	
1	0	0	X	0 V	1	0	0	X	0 V
1	0	1	0	3.3 V	1	0	1	0	3.3 V
1	0	1	1	5 V	1	0	1	1	5 V
1	1	0	X	12 V	1	1	0	X	12 V
1	1	1	X	Hi-Z	1	1	1	X	Hi-Z
0	X	X	X	Hi-Z	0	X	X	X	Hi-Z

Table 3−6. TPS2226 Control Logic—xVCC

AVCC CONTROL SIGNALS			OUTPUT V_AVCC	BVCC CONTROL SIGNALS			OUTPUT V_BVCC
D8(SHDN)	D3	D2		D8(SHDN)	D6	D7	
1	0	0	0 V	1	0	0	0 V
1	0	1	3.3 V	1	0	1	3.3 V
1	1	0	5 V	1	1	0	5 V
1	1	1	0 V	1	1	1	0 V
0	X	X	Hi-Z	0	X	X	Hi-Z

3.5.6 Internal Ring Oscillator

The internal ring oscillator provides an internal clock source for the PCIxx12 controller so that neither the PCI clock nor an external clock is required in order for the controller to power down a socket or interrogate a PC Card. This internal oscillator, operating nominally at 16 kHz, is always enabled.

3.5.7 Integrated Pullup Resistors for PC Card Interface

The *PC Card Standard* requires pullup resistors on various terminals to support both CardBus and 16-bit PC Card configurations. The PCIxx12 controller has integrated all of these pullup resistors and requires no additional external components. The I/O buffer on the CSTSCHG//BVD1($\overline{\text{STSCHG}}$) terminal has the capability to switch to an internal pullup resistor when a 16-bit PC Card is inserted, or switch to an internal pulldown resistor when a CardBus card is inserted. This prevents inadvertent CSTSCHG events.

3.5.8 SPKROUT and CAUDPWM Usage

The SPKROUT terminal carries the digital audio signal from the PC Card to the system. When a 16-bit PC Card is configured for I/O mode, the BVD2 terminal becomes the $\overline{\text{SPKR}}$ input terminal from the card. This terminal, in CardBus applications, is referred to as CAUDIO. $\overline{\text{SPKR}}$ passes a TTL-level binary audio signal to the PCIxx12 controller. The CardBus CAUDIO signal also can pass a single-amplitude binary waveform as well as a PWM signal. The binary audio signal from the PC Card socket is enabled by bit 1 (SPKROUTEN) of the card control register (PCI offset 91h, see Section 4.37).

Older controllers support CAUDIO in binary or PWM mode, but use the same output terminal (SPKROUT). Some audio chips may not support both modes on one terminal and may have a separate terminal for binary and PWM. The PCIxx12 implementation includes a signal for PWM, CAUDPWM, which can be routed to an MFUNC terminal. Bit 2 (AUD2MUX), located in the card control register, is programmed to route a CardBus CAUDIO PWM terminal to CAUDPWM. See Section 4.35, *Multifunction Routing Register*, for details on configuring the MFUNC terminals.

Figure 3−5 illustrates the SPKROUT connection.

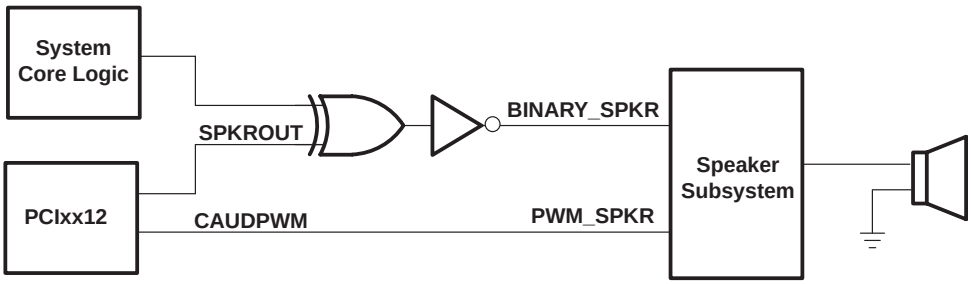

Figure 3−5. SPKROUT Connection to Speaker Driver

3.5.9 LED Socket Activity Indicators

The socket activity LEDs indicate when a PC Card is being accessed. The LEDA1 and LEDSKT signals can be routed to the multifunction terminals. When configured for LED outputs, these terminals output an active high signal to indicate socket activity. See Section 4.35, *Multifunction Routing Status Register*, for details on configuring the multifunction terminals.

The active-high LED signal is driven for 64 ms. When the LED is not being driven high, it is driven to a low state. Either of the two circuits shown in Figure 3−6 can be implemented to provide LED signaling, and the board designer must implement the circuit that best fits the application.

The LED activity signals are valid when a card is inserted, powered, and not in reset. For PC Card-16, the LED activity signals are pulsed when READY($\overline{\text{IREQ}}$) is low. For CardBus cards, the LED activity signals are pulsed if $\overline{\text{CFRAME}}$, $\overline{\text{IRDY}}$, or $\overline{\text{CREQ}}$ is active.

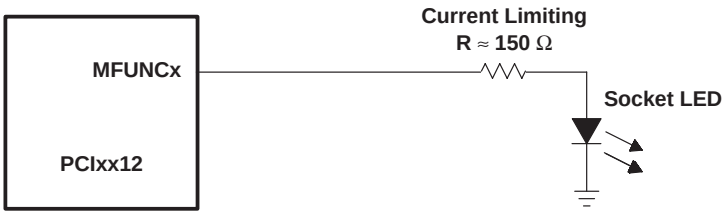

Figure 3−6. Sample LED Circuit

As indicated, the LED signals are driven for a period of 64 ms by a counter circuit. To avoid the possibility of the LEDs appearing to be stuck when the PCI clock is stopped, the LED signaling is cut off when the $\overline{\text{SUSPEND}}$ signal is asserted, when the PCI clock is to be stopped during the clock run protocol, or when in the D2 or D1 power state.

If any additional socket activity occurs during this counter cycle, then the counter is reset and the LED signal remains driven. If socket activity is frequent (at least once every 64 ms), then the LED signals remain driven.

3.5.10 CardBus Socket Registers

The PCIxx12 controller contains all registers for compatibility with the *PCI Local Bus Specification* and the *PC Card Standard*. These registers, which exist as the CardBus socket registers, are listed in Table 3−7.

Table 3−7. CardBus Socket Registers

REGISTER NAME	OFFSET
Socket event	00h
Socket mask	04h
Socket present state	08h
Socket force event	0Ch
Socket control	10h
Reserved	14h−1Ch
Socket power management	20h

3.5.11 48-MHz Clock Requirements

The PCIxx12 controller is designed to use an external 48-MHz clock connected to the CLK_48 terminal to provide the reference for an internal oscillator circuit. This oscillator in turn drives a PLL circuit that generates the various clocks required for the flash media function (Function 2) of the controller.

The 48-MHz clock is needed as follows in the designated states:

- Power−up — Follow the power-up sequence
- D0: — Clock must not be stopped
- D1/D2/D3: — Clock can be stopped
- $D1/D2/D3_{hot}$ to D0: — Need 10 clocks before D0 state
- $D3_{cold}$ to D0: — Need 10 clocks before $\overline{\text{PRST}}$ de-assert

The 48-MHz clock must maintain a frequency of 48 MHz ± 0.8% over normal operating conditions. This clock must maintain a duty cycle of 40% − 60%. The controller requires that the 48-MHz clock be running and stable (a minimum of 10 clock pulses) before a $\overline{\text{GRST}}$ deassertion.

The following are typical specifications for crystals used with the controller in order to achieve the required frequency accuracy and stability.

- Crystal mode of operation: Fundamental
- Frequency tolerance @ 25°C: Total frequency variation for the complete circuit is ±100 ppm. A crystal with ±30 ppm frequency tolerance is recommended for adequate margin.
- Frequency stability (overtemperature and age): A crystal with ±30 ppm frequency stability is recommended for adequate margin.

NOTE: The total frequency variation must be kept below ±100 ppm from nominal with some allowance for error introduced by board and device variations. Trade-offs between frequency tolerance and stability may be made as long as the total frequency variation is less than ±100 ppm. For example, the frequency tolerance of the crystal may be specified at 50 ppm and the temperature tolerance may be specified at 30 ppm to give a total of 80 ppm possible variation due to the crystal alone. Crystal aging also contributes to the frequency variation.

3.6 Serial EEPROM Interface

The PCIxx12 controller has a dedicated serial bus interface that can be used with an EEPROM to load certain registers in the controller. The EEPROM is detected by a pullup resistor on the SCL terminal. See Table 3−9 for the EEPROM loading map.

3.6.1 Serial-Bus Interface Implementation

The PCIxx12 controller drives SCL at nearly 100 kHz during data transfers, which is the maximum specified frequency for standard mode I^2C. The serial EEPROM must be located at address A0h.

Some serial device applications may include PC Card power switches, card ejectors, or other devices that may enhance the user's PC Card experience. The serial EEPROM device and PC Card power switches are discussed in the sections that follow.

3.6.2 Accessing Serial-Bus Devices Through Software

The PCIxx12 controller provides a programming mechanism to control serial bus devices through software. The programming is accomplished through a doubleword of PCI configuration space at offset B0h. Table 3−8 lists the registers used to program a serial-bus device through software.

Table 3−8. PCIxx12 Registers Used to Program Serial-Bus Devices

PCI OFFSET	REGISTER NAME	DESCRIPTION
B0h	Serial-bus data	Contains the data byte to send on write commands or the received data byte on read commands.
B1h	Serial-bus index	The content of this register is sent as the word address on byte writes or reads. This register is not used in the quick command protocol.
B2h	Serial-bus slave address	Write transactions to this register initiate a serial-bus transaction. The slave device address and the R/$\overline{W}$ command selector are programmed through this register.
B3h	Serial-bus control and status	Read data valid, general busy, and general error status are communicated through this register. In addition, the protocol-select bit is programmed through this register.

3.6.3 Serial-Bus Interface Protocol

The SCL and SDA signals are bidirectional, open-drain signals and require pullup resistors as shown in Figure 3−4. The PCIxx12 controller, which supports up to 100-Kb/s data-transfer rate, is compatible with standard mode I^2C using 7-bit addressing.

All data transfers are initiated by the serial bus master. The beginning of a data transfer is indicated by a start condition, which is signaled when the SDA line transitions to the low state while SCL is in the high state, as shown in Figure 3−7. The end of a requested data transfer is indicated by a stop condition, which is signaled by a low-to-high transition of SDA while SCL is in the high state, as shown in Figure 3−7. Data on SDA must remain stable during the high state of the SCL signal, as changes on the SDA signal during the high state of SCL are interpreted as control signals, that is, a start or a stop condition.

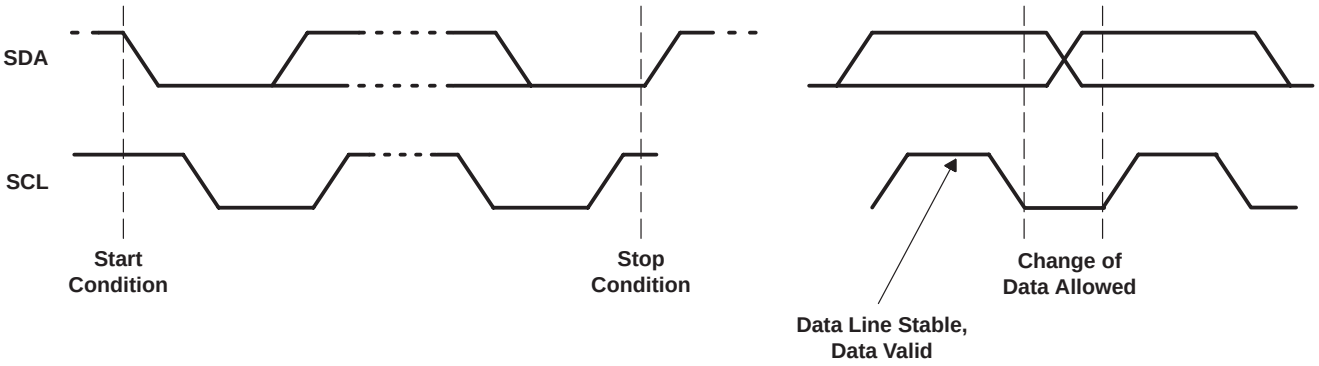

Figure 3−7. Serial-Bus Start/Stop Conditions and Bit Transfers

Data is transferred serially in 8-bit bytes. The number of bytes that may be transmitted during a data transfer is unlimited; however, each byte must be completed with an acknowledge bit. An acknowledge (ACK) is indicated by the receiver pulling the SDA signal low, so that it remains low during the high state of the SCL signal. Figure 3−8 illustrates the acknowledge protocol.

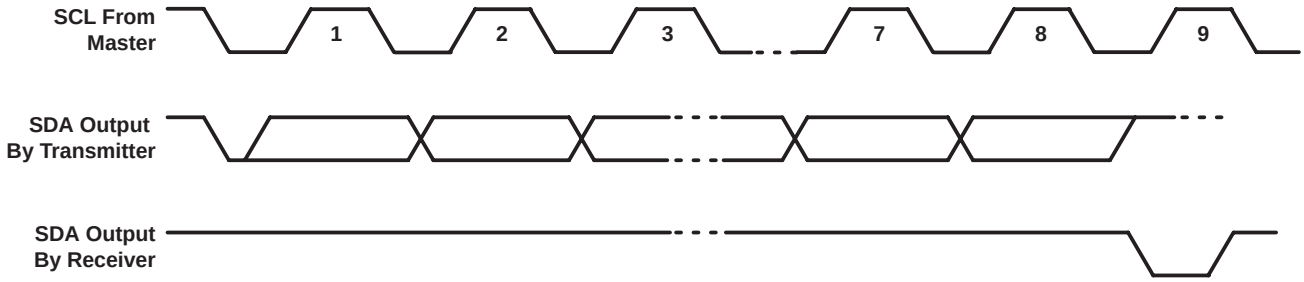

Figure 3−8. Serial-Bus Protocol Acknowledge

The controller is a serial bus master; all other devices connected to the serial bus external to the controller are slave devices. As the bus master, the controller drives the SCL clock at nearly 100 kHz during bus cycles and places SCL in a high-impedance state (zero frequency) during idle states.

Typically, the controller masters byte reads and byte writes under software control. Doubleword reads are performed by the serial EEPROM initialization circuitry upon a PCI reset and may not be generated under software control. See Section 3.6.4, *Serial-Bus EEPROM Application*, for details on how the controller automatically loads the subsystem identification and other register defaults through a serial-bus EEPROM.

Figure 3−9 illustrates a byte write. The controller issues a start condition and sends the 7-bit slave device address and the command bit zero. A 0b in the R/$\overline{W}$ command bit indicates that the data transfer is a write. The slave device acknowledges if it recognizes the address. If no acknowledgment is received by the controller, then an appropriate status bit is set in the serial-bus control/status register (PCI offset B3h, see Section 4.49). The word address byte is then sent by the controller, and another slave acknowledgment is expected. Then the controller delivers the data byte MSB first and expects a final acknowledgment before issuing the stop condition.

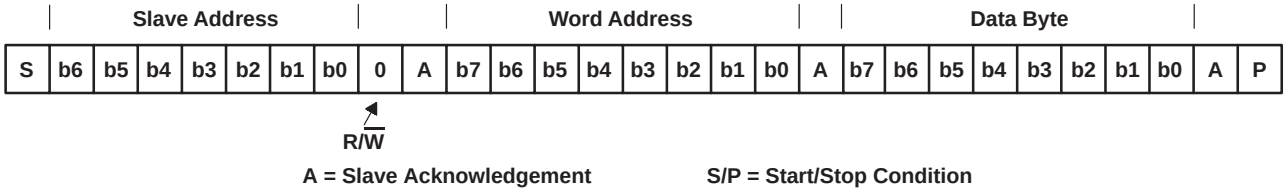

Figure 3−9. Serial-Bus Protocol—Byte Write

Figure 3−10 illustrates a byte read. The read protocol is very similar to the write protocol, except the R/$\overline{W}$ command bit must be set to 1b to indicate a read-data transfer. In addition, the PCIxx12 master must acknowledge reception of the read bytes from the slave transmitter. The slave transmitter drives the SDA signal during read data transfers. The SCL signal remains driven by the PCIxx12 master.

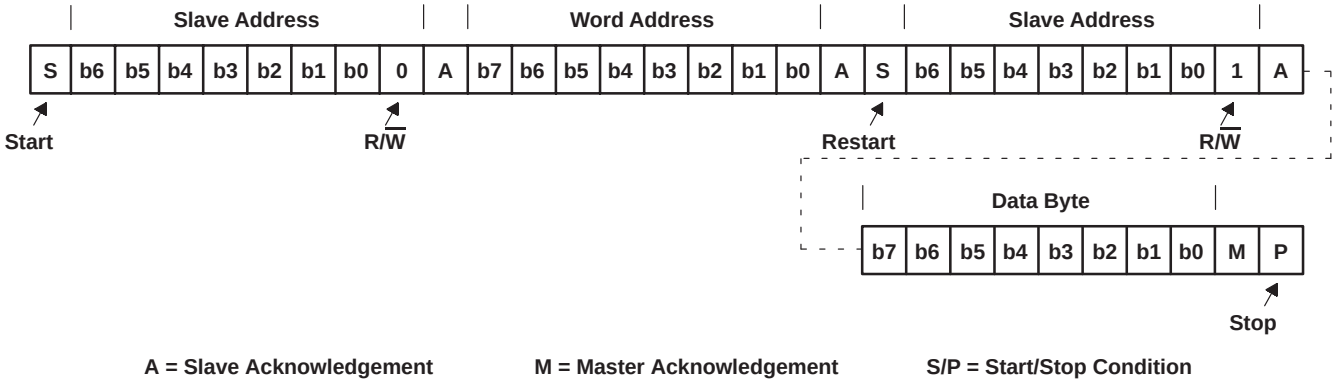

Figure 3−10. Serial-Bus Protocol—Byte Read

Figure 3−11 illustrates EEPROM interface doubleword data collection protocol.

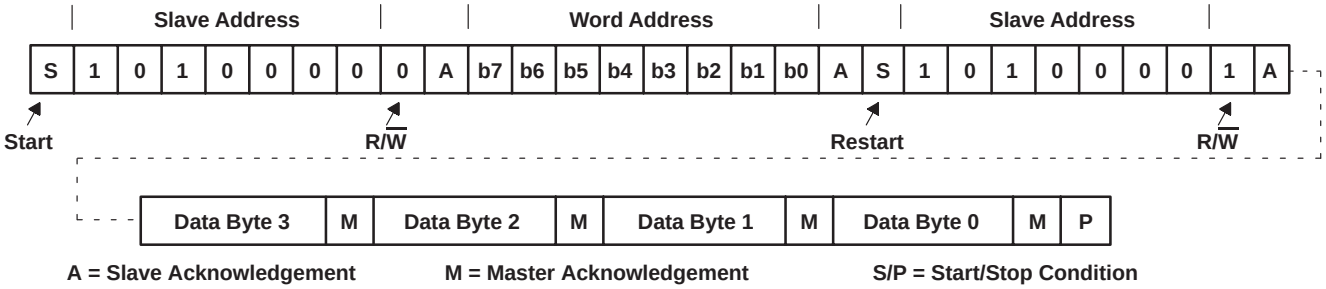

Figure 3−11. EEPROM Interface Doubleword Data Collection

3.6.4 Serial-Bus EEPROM Application

When the PCI bus is reset and the serial-bus interface is detected, the PCIxx12 controller attempts to read the subsystem identification and other register defaults from a serial EEPROM.

This format must be followed for the controller to load initializations from a serial EEPROM. All bit fields must be considered when programming the EEPROM.

The serial EEPROM is addressed at slave address 1010 000b by the controller. All hardware address bits for the EEPROM must be tied to the appropriate level to achieve this address. The serial EEPROM chip in the sample application (Figure 3−11) assumes the 1010b high-address nibble. The lower three address bits are terminal inputs to the chip, and the sample application shows these terminal inputs tied to GND.

Table 3−9. EEPROM Loading Map

SERIAL ROM OFFSET	BYTE DESCRIPTION						
00h	CardBus function indicator (00h)						
01h	Number of bytes (22h)						
02h	PCI 04h, command register, function 0, bits 8, 6−5, 2−0						
	[7] Command register, bit 8	[6] Command register, bit 6	[5] Command register, bit 5	[4:3] RSVD	[2] Command register, bit 2	[1] Command register, bit 1	[0] Command register, bit 0
03h	Reserved						
04h	PCI 40h, subsystem vendor ID, byte 0						
05h	PCI 41h, subsystem vendor ID, byte 1						
06h	PCI 42h, subsystem ID, byte 0						
07h	PCI 43h, subsystem ID, byte 1						
08h	PCI 44h, PC Card 16-bit I/F legacy mode base address register, byte 0, bits 7−1						
09h	PCI 45h, PC Card 16-bit I/F legacy mode base address register, byte 1						
0Ah	PCI 46h, PC Card 16-bit I/F legacy mode base address register, byte 2						
0Bh	PCI 47h, PC Card 16-bit I/F legacy mode base address register, byte 3						
0Ch	PCI 80h, system control, function 0, byte 0, bits 6−0						
0Dh	Reserved						
0Eh	PCI 81h, system control, byte 1, bits 7, 6						
0Fh	Reserved nonloadable (PCI 82h, system control, byte 2)						
10h	PCI 83h, system control, byte 3						
11h	PCI 8Ch, MFUNC routing, byte 0						
12h	PCI 8Dh, MFUNC routing, byte 1						
13h	PCI 8Eh, MFUNC routing, byte 2						
14h	PCI 8Fh, MFUNC routing, byte 3						
15h	PCI 90h, retry status, bits 7, 6						
16h	PCI 91h, card control, bit 7						
17h	PCI 92h, device control, bits 6−1 (bit 0 must be programmed to 0b)						
18h	PCI 93h, diagnostic, bits 7, 4−0						
19h	PCI A2h, power-management capabilities, function 0, bit 15 (bit 7 of EEPROM offset 19h corresponds to bit 15)						
1Ah	Reserved						
1Bh	Reserved						
1Ch	Reserved						
1Dh	ExCA 00h, ExCA identification and revision, bits 7−0						
1Eh	PCI 86h, general control, byte 0, bits 7−0						
1Fh	PCI 87h, general control, byte 1, bits 7, 6 (can only be set to 1b if bits 1:0 = 01b), 4−0						
20h	PCI 89h, $\overline{\text{GPE}}$ enable, bits 7, 6, 4−0						
21h	PCI 8Bh, general-purpose output, bits 4−0						
22h	PCI 85h, general control byte 1, bits 2−0						
23h	Reserved						
24h	1394 OHCI function indicator (01h)						
25h	Number of bytes (17h)						
26h	PCI 3Fh, maximum latency bits 7−4			PCI 3Eh, minimum grant, bits 3−0			
27h	PCI 2Ch, subsystem vendor ID, byte 0						

Table 3−9. EEPROM Loading Map (Continued)

SERIAL ROM OFFSET	BYTE DESCRIPTION					
28h	PCI 2Dh, subsystem vendor ID, byte 1					
29h	PCI 2Eh, subsystem ID, byte 0					
2Ah	PCI 2Fh, subsystem ID, byte 1					
2Bh	PCI F4h, Link_Enh, byte 0, bits 7, 2, 1 OHCI 50h, host controller control, bit 23					
	[7] Link_Enh. enab_unfair	[6] HCControl.Program Phy Enable	[5:3] RSVD	[2] Link_Enh, bit 2	[1] Link_Enh. enab_accel	[0] RSVD
2Ch	Mini-ROM address, this byte indicates the MINI ROM offset into the EEPROM 00h = No MINI ROM Other Values = MINI ROM offset					
2Dh	OHCI 24h, GUIDHi, byte 0					
2Eh	OHCI 25h, GUIDHi, byte 1					
2Fh	OHCI 26h, GUIDHi, byte 2					
30h	OHCI 27h, GUIDHi, byte 3					
31h	OHCI 28h, GUIDLo, byte 0					
32h	OHCI 29h, GUIDLo, byte 1					
33h	OHCI 2Ah, GUIDLo, byte 2					
34h	OHCI 2Bh, GUIDLo, byte 3					
35h	Checksum (Reserved—no bit loaded)					
36h	PCI F5h, Link_Enh, byte 1, bits 7, 6, 5, 4					
37h	PCI F0h, PCI miscellaneous, byte 0, bits 7, 5, 4, 2, 1, 0					
38h	PCI F1h, PCI miscellaneous, byte 1, bits 7−0					
39h	Reserved					
3Ah	Reserved (CardBus CIS pointer)					
3Bh	Reserved					
3Ch	PCI ECh, PCI PHY control, bits 7, 3, 1					
3Dh	Flash media core function indicator (02h)					
3Eh	Number of bytes (05h)					
3Fh	PCI 2Ch, subsystem vendor ID, byte 0					
40h	PCI 2Dh, subsystem vendor ID, byte 1					
41h	PCI 2Eh, subsystem ID, byte 0					
42h	PCI 2Fh, subsystem ID, byte 1					
43h	PCI 4Ch, general control, bits 7−4, 2−0					
44h	SD host controller function indicator (03h)					
45h	Number of bytes (0Bh)					
46h	PCI 2Ch, subsystem vendor ID, byte 0					
47h	PCI 2Dh, subsystem vendor ID, byte 1					
48h	PCI 2Eh, subsystem ID, byte 0					
49h	PCI 2Fh, subsystem ID, byte 1					
4Ah	PCI 88h, general control bits 7−3, 1, 0					
4Bh	PCI 94h, slot 0 3.3 V maximum current					
4Ch	Reserved (PCI 98h, slot 1 3.3 V maximum current)					
4Dh	Reserved (PCI 9Ch, slot 2 3.3 V maximum current)					

Table 3−9. EEPROM Loading Map (Continued)

SERIAL ROM OFFSET	BYTE DESCRIPTION
4Eh	Reserved (PCI A0h, slot 3 3.3 V maximum current)
4Fh	Reserved (PCI A4h, slot 4 3.3 V maximum current)
50h	Reserved (PCI A8h, slot 5 3.3 V maximum current)
51h	PCI Smart Card function indicator (04h)
52h	Number of bytes (0Eh)
53h	PCI 09h, class code, byte 0
54h	PCI 0Ah, class code, byte 1
55h	PCI 0Bh, class code, byte 2
56h	PCI 2Ch, subsystem vendor ID, byte 0
57h	PCI 2Dh, subsystem vendor ID, byte 1
58h	PCI 2Eh, subsystem ID, byte 0
59h	PCI 2Fh, subsystem ID, byte 1
5Ah	PCI 4Ch, general control bits 7−4
5Bh	PCI 58h, Smart Card configuration 1, byte 0, bits 4, 0
5Ch	PCI 59h, Smart Card configuration 1, byte 1, bits 4, 0
5Dh	PCI 5Ah, Smart Card configuration 1, byte 2, bits 4, 0
5Eh	PCI 5Bh, Smart Card configuration 1, byte 3, bits 7−4, 0
5Fh	PCI 5Ch, Smart Card configuration 2, byte 0
60h	PCI 5Dh, Smart Card configuration 2, byte 1
61h	End-of-list indicator (80h)

3.7 Programmable Interrupt Subsystem

Interrupts provide a way for I/O devices to let the microprocessor know that they require servicing. The dynamic nature of PC Cards and the abundance of PC Card I/O applications require substantial interrupt support from the PCIxx12 controller. The controller provides several interrupt signaling schemes to accommodate the needs of a variety of platforms. The different mechanisms for dealing with interrupts in this controller are based on various specifications and industry standards. The ExCA register set provides interrupt control for some 16-bit PC Card functions, and the CardBus socket register set provides interrupt control for the CardBus PC Card functions. The controller is, therefore, backward compatible with existing interrupt control register definitions, and new registers have been defined where required.

The controller detects PC Card interrupts and events at the PC Card interface and notifies the host controller using one of several interrupt signaling protocols. To simplify the discussion of interrupts in the controller, PC Card interrupts are classified either as card status change (CSC) or as functional interrupts.

The method by which any type of interrupt is communicated to the host interrupt controller varies from system to system. The controller offers system designers the choice of using parallel PCI interrupt signaling, parallel ISA-type IRQ interrupt signaling, or the IRQSER serialized ISA and/or PCI interrupt protocol. It is possible to use the parallel PCI interrupts in combination with either parallel IRQs or serialized IRQs, as detailed in the sections that follow. All interrupt signaling is provided through the seven multifunction terminals, MFUNC0−MFUNC6.

3.7.1 PC Card Functional and Card Status Change Interrupts

PC Card functional interrupts are defined as requests from a PC Card application for interrupt service and are indicated by asserting specially-defined signals on the PC Card interface. Functional interrupts are generated by 16-bit I/O PC Cards and by CardBus PC Cards.

Card status change (CSC)-type interrupts are defined as events at the PC Card interface that are detected by the PCIxx12 controller and may warrant notification of host card and socket services software for service. CSC events include both card insertion and removal from PC Card sockets, as well as transitions of certain PC Card signals.

Table 3−10 summarizes the sources of PC Card interrupts and the type of card associated with them. CSC and functional interrupt sources are dependent on the type of card inserted in the PC Card socket. The four types of cards that can be inserted into any PC Card socket are:

- 16-bit memory card
- 16-bit I/O card
- CardBus cards
- UltraMedia card

Table 3−10. Interrupt Mask and Flag Registers

CARD TYPE	EVENT	MASK	FLAG
16-bit memory	Battery conditions (BVD1, BVD2)	ExCA offset 05h/805h bits 1 and 0	ExCA offset 04h/804h bits 1 and 0
	Wait states (READY)	ExCA offset 05h/805h bit 2	ExCA offset 04h/804h bit 2
16-bit I/O	Change in card status ($\overline{\text{STSCHG}}$)	ExCA offset 05h/805h bit 0	ExCA offset 04h/804h bit 0
16-bit I/O	Interrupt request ($\overline{\text{IREQ}}$)	Always enabled	PCI configuration offset 91h bit 0
All 16-bit PC Cards/Smart Card adaptors	Power cycle complete	ExCA offset 05h/805h bit 3	ExCA offset 04h/804h bit 3
CardBus	Change in card status (CSTSCHG)	Socket mask bit 0	Socket event bit 0
	Interrupt request ($\overline{\text{CINT}}$)	Always enabled	PCI configuration offset 91h bit 0
	Power cycle complete	Socket mask bit 3	Socket event bit 3
	Card insertion or removal	Socket mask bits 2 and 1	Socket event bits 2 and 1

Functional interrupt events are valid only for CardBus and 16-bit I/O cards; that is, the functional interrupts are not valid for 16-bit memory cards. Furthermore, card insertion and removal-type CSC interrupts are independent of the card type.

Table 3−11. PC Card Interrupt Events and Description

CARD TYPE	EVENT	TYPE	SIGNAL	DESCRIPTION
16-bit memory	Battery conditions (BVD1, BVD2)	CSC	CSTSCHG // BVD1($\overline{\text{STSCHG}}$)	A transition on BVD1 indicates a change in the PC Card battery conditions.
			CAUDIO // BVD2($\overline{\text{SPKR}}$)	A transition on BVD2 indicates a change in the PC Card battery conditions.
	Wait states (READY)	CSC	$\overline{\text{CINT}}$ // READY($\overline{\text{IREQ}}$)	A transition on READY indicates a change in the ability of the memory PC Card to accept or provide data.
16-bit I/O	Change in card status ($\overline{\text{STSCHG}}$)	CSC	CSTSCHG // BVD1($\overline{\text{STSCHG}}$)	The assertion of $\overline{\text{STSCHG}}$ indicates a status change on the PC Card.
16-bit I/O	Interrupt request ($\overline{\text{IREQ}}$)	Functional	$\overline{\text{CINT}}$ // READY($\overline{\text{IREQ}}$)	The assertion of $\overline{\text{IREQ}}$ indicates an interrupt request from the PC Card.
CardBus	Change in card status (CSTSCHG)	CSC	CSTSCHG // BVD1($\overline{\text{STSCHG}}$)	The assertion of CSTSCHG indicates a status change on the PC Card.
	Interrupt request ($\overline{\text{CINT}}$)	Functional	$\overline{\text{CINT}}$ // READY($\overline{\text{IREQ}}$)	The assertion of $\overline{\text{CINT}}$ indicates an interrupt request from the PC Card.
All PC Cards/ Smart Card adaptors	Card insertion or removal	CSC	$\overline{\text{CCD1}}$ // $\overline{\text{CD1}}$, $\overline{\text{CCD2}}$ // $\overline{\text{CD2}}$	A transition on either $\overline{\text{CD1}}$//$\overline{\text{CCD1}}$ or $\overline{\text{CD2}}$//$\overline{\text{CCD2}}$ indicates an insertion or removal of a 16-bit or CardBus PC Card.
	Power cycle complete	CSC	N/A	An interrupt is generated when a PC Card power-up cycle has completed.

The naming convention for PC Card signals describes the function for CardBus, 16-bit memory, and 16-bit I/O cards. For example, $\overline{\text{CINT}}$//READY($\overline{\text{IREQ}}$) includes $\overline{\text{CINT}}$ for CardBus cards, READY for 16-bit memory cards, and $\overline{\text{IREQ}}$ for 16-bit I/O cards. The CardBus signal name is first. The 16-bit memory card signal name follows after a double slash (//) with the 16-bit I/O card signal name second, enclosed in parentheses.

The *1997 PC Card Standard* describes the power-up sequence that must be followed by the controller when an insertion event occurs and the host requests that the socket V_{CC} and V_{PP} be powered. Upon completion of this power-up sequence, the PCIxx12 interrupt scheme can be used to notify the host system (see Table 3−11), denoted by the power cycle complete event. This interrupt source is considered a PCIxx12 internal event, because it depends on the completion of applying power to the socket rather than on a signal change at the PC Card interface.

3.7.2 Interrupt Masks and Flags

Host software may individually mask (or disable) most of the potential interrupt sources listed in Table 3−11 by setting the appropriate bits in the PCIxx12 controller. By individually masking the interrupt sources listed, software can control those events that cause a PCIxx12 interrupt. Host software has some control over the system interrupt the controller asserts by programming the appropriate routing registers. The controller allows host software to route PC Card CSC and PC Card functional interrupts to separate system interrupts. Interrupt routing somewhat specific to the interrupt signaling method used is discussed in more detail in the following sections.

When an interrupt is signaled by the controller, the interrupt service routine must determine which of the events listed in Table 3−10 caused the interrupt. Internal registers in the controller provide flags that report the source of an interrupt. By reading these status bits, the interrupt service routine can determine the action to be taken.

Table 3−10 details the registers and bits associated with masking and reporting potential interrupts. All interrupts can be masked except the functional PC Card interrupts, and an interrupt status flag is available for all types of interrupts.

Notice that there is not a mask bit to stop the controller from passing PC Card functional interrupts through to the appropriate interrupt scheme. These interrupts are not valid until the card is properly powered, and there must never be a card interrupt that does not require service after proper initialization.

Table 3−10 lists the various methods of clearing the interrupt flag bits. The flag bits in the ExCA registers (16-bit PC Card-related interrupt flags) can be cleared using two different methods. One method is an explicit write of 1b to the flag bit to clear and the other is by reading the flag bit register. The selection of flag bit clearing methods is made by bit 2 (IFCMODE) in the ExCA global control register (ExCA offset 1Eh/81Eh, see Section 5.20), and defaults to the flag-cleared-on-read method.

The CardBus-related interrupt flags can be cleared by an explicit write of 1b to the interrupt flag in the socket event register (see Section 6.1). Although some of the functionality is shared between the CardBus registers and the ExCA registers, software must not program the chip through both register sets when a CardBus card is functioning.

3.7.3 Using Parallel IRQ Interrupts

The seven multifunction terminals, MFUNC6−MFUNC0, implemented in the PCIxx12 controller can be routed to obtain a subset of the ISA IRQs. The IRQ choices provide ultimate flexibility in PC Card host interruptions. To use the parallel ISA-type IRQ interrupt signaling, software must program the device control register (PCI offset 92h, see Section 4.38), to select the parallel IRQ signaling scheme. See Section 4.35, *Multifunction Routing Status Register*, for details on configuring the multifunction terminals.

A system using parallel IRQs requires (at a minimum) one PCI terminal, $\overline{\text{INTA}}$, to signal CSC events. This requirement is dictated by certain card and socket-services software. The $\overline{\text{INTA}}$ requirement calls for routing the MFUNC0 terminal for $\overline{\text{INTA}}$ signaling. The INTRTIE bit is used, in this case, to route socket interrupt events to $\overline{\text{INTA}}$. This leaves (at a maximum) six different IRQs to support legacy 16-bit PC Card functions.

As an example, suppose the six IRQs used by legacy PC Card applications are IRQ3, IRQ4, IRQ5, IRQ9, IRQ10, and IRQ15. The multifunction routing status register must be programmed to a value of 0A9F 5432h. This value routes the MFUNC0 terminal to $\overline{\text{INTA}}$ signaling and routes the remaining terminals as illustrated in Figure 3−12. Not shown is that $\overline{\text{INTA}}$ must also be routed to the programmable interrupt controller (PIC), or to some circuitry that provides parallel PCI interrupts to the host.

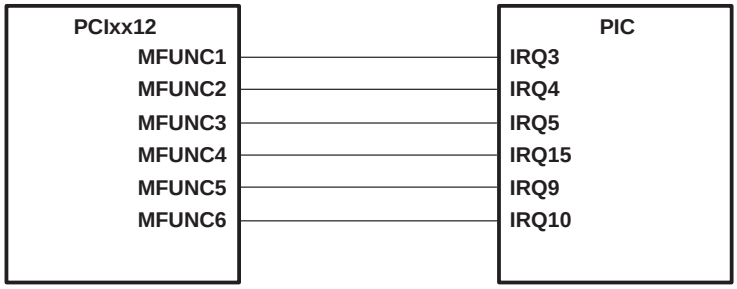

Figure 3−12. IRQ Implementation

Power-on software is responsible for programming the multifunction routing status register to reflect the IRQ configuration of a system implementing the controller. The multifunction routing status register is a global register that is shared between the four PCIxx12 functions. See Section 4.35, *Multifunction Routing Status Register*, for details on configuring the multifunction terminals.

The parallel ISA-type IRQ signaling from the MFUNC6−MFUNC0 terminals is compatible with the input signal requirements of the 8259 PIC. The parallel IRQ option is provided for system designs that require legacy ISA IRQs. Design constraints may demand more MFUNC6−MFUNC0 IRQ terminals than the controller makes available.

3.7.4 Using Parallel PCI Interrupts

Parallel PCI interrupts are available when exclusively in parallel PCI interrupt/parallel ISA IRQ signaling mode, and when only IRQs are serialized with the IRQSER protocol. The $\overline{\text{INTA}}$, $\overline{\text{INTB}}$, $\overline{\text{INTC}}$, and $\overline{\text{INTD}}$ can be routed to MFUNC terminals (MFUNC0, MFUNC1, MFUNC2, and MFUNC4). If bit 29 (INTRTIE) is set in the system control register (PCI offset 80h, see Section 4.29), then $\overline{\text{INTA}}$ and $\overline{\text{INTB}}$ are tied internally. When the TIEALL bit is set, all functions return a value of 01h on reads from the interrupt pin register for both parallel and serial PCI interrupts.

The INTRTIE and TIEALL bits affect the read-only value provided through accesses to the interrupt pin register (PCI offset 3Dh, see Section 4.24). Table 3−12 summarizes the interrupt signaling modes.

Table 3−12. Interrupt Pin Register Cross Reference

INTRTIE Bit	TIEALL Bit	INTPIN Function 0 (CardBus)	INTPIN Function 1 (1394 OHCI)	INTPIN Function 2 (Flash Media)	INTPIN Function 3 (SD Host)	INTPIN Function 4 (Smart Card)
0	0	0x01 ($\overline{\text{INTA}}$)	0x02 ($\overline{\text{INTB}}$)	Determined by bits 6−5 (INT_SEL field) in flash media general control register (see Section 11.21)	Determined by bits 6−5 (INT_SEL field) in SD host general control register (see Section 12.22)	Determined by bits 6−5 (INT_SEL field) in Smart Card general control register (see Section 13.22)
1	0	0x01 ($\overline{\text{INTA}}$)	0x01 ($\overline{\text{INTA}}$)			
X	1	0x01 ($\overline{\text{INTA}}$)	0x01 ($\overline{\text{INTA}}$)	0x01 ($\overline{\text{INTA}}$)	0x01 ($\overline{\text{INTA}}$)	0x01 ($\overline{\text{INTA}}$)

3.7.5 Using Serialized IRQSER Interrupts

The serialized interrupt protocol implemented in the PCIxx12 controller uses a single terminal to communicate all interrupt status information to the host controller. The protocol defines a serial packet consisting of a start cycle, multiple interrupt indication cycles, and a stop cycle. All data in the packet is synchronous with the PCI clock. The packet data describes 16 parallel ISA IRQ signals and the optional 4 PCI interrupts $\overline{\text{INTA}}$, $\overline{\text{INTB}}$, $\overline{\text{INTC}}$, and $\overline{\text{INTD}}$. For details on the IRQSER protocol, refer to the document *Serialized IRQ Support for PCI Systems*.

3.7.6 SMI Support in the PCIxx12 Controller

The PCIxx12 controller provides a mechanism for interrupting the system when power changes have been made to the PC Card socket interfaces. The interrupt mechanism is designed to fit into a system maintenance interrupt (SMI) scheme. SMI interrupts are generated by the controller, when enabled, after either a write cycle to the socket control register (CB offset 10h, see Section 6.5) of the CardBus register set, or the ExCA power control register (ExCA offset 02h/802h, see Section 5.3) causes a power cycle change sequence to be sent on the power switch interface.

The SMI control is programmed through three bits in the system control register (PCI offset 80h, see Section 4.29). These bits are SMIROUTE (bit 26), SMISTATUS (bit 25), and SMIENB (bit 24). Table 3−13 describes the SMI control bits function.

Table 3−13. SMI Control

BIT NAME	FUNCTION
SMIROUTE	This shared bit controls whether the SMI interrupts are sent as a CSC interrupt or as IRQ2.
SMISTAT	This socket-dependent bit is set when an SMI interrupt is pending. This status flag is cleared by writing back a 1b.
SMIENB	When set, SMI interrupt generation is enabled.

If CSC SMI interrupts are selected, then the SMI interrupt is sent as the CSC on a per-socket basis. The CSC interrupt can be either level or edge mode, depending upon the CSCMODE bit in the ExCA global control register (ExCA offset 1Eh/81Eh, see Section 5.20).

If IRQ2 is selected by SMIROUTE, then the IRQSER signaling protocol supports SMI signaling in the IRQ2 IRQ/Data slot. In a parallel ISA IRQ system, the support for an active low IRQ2 is provided only if IRQ2 is routed to either MFUNC3 or MFUNC6 through the multifunction routing status register (PCI offset 8Ch, see Section 4.35).

3.8 Power-Management Overview

In addition to the low-power CMOS technology process used for the PCIxx12 controller, various features are designed into the controller to allow implementation of popular power-saving techniques. These features and techniques are as follows:

- Clock run protocol
- Cardbus PC Card power management
- 16-bit PC Card power management
- Suspend mode
- Ring indicate
- PCI power management
- Cardbus bridge power management
- ACPI support

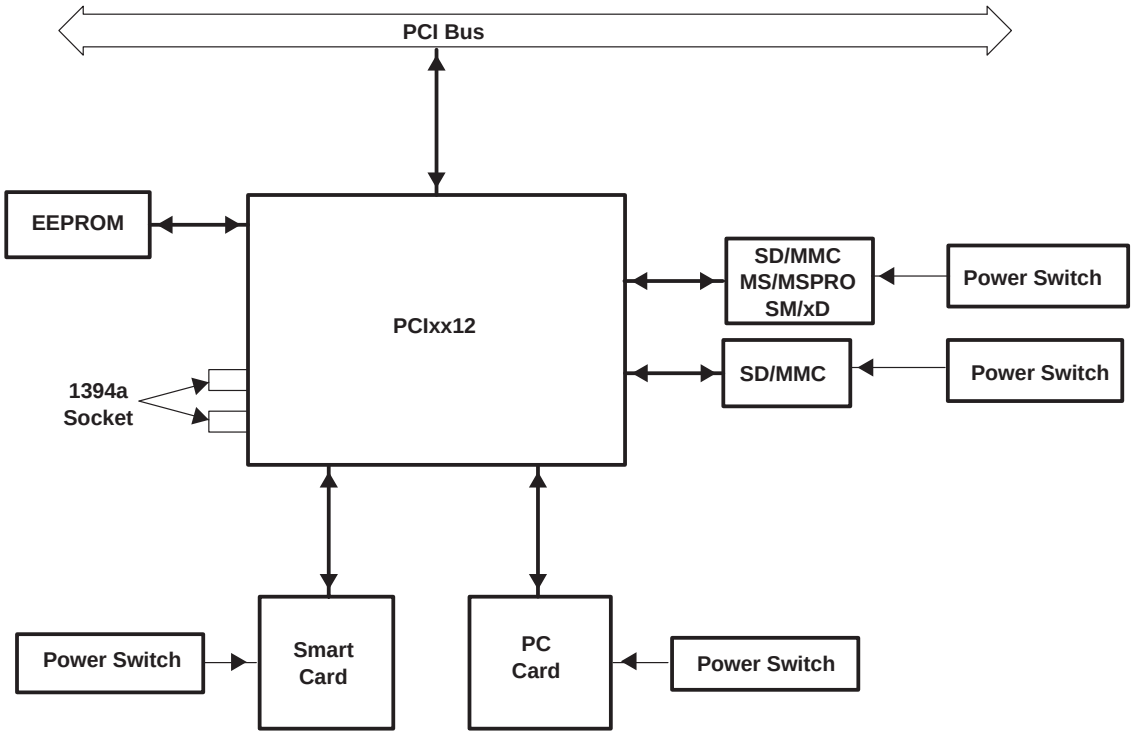

† The system connection to $\overline{\text{GRST}}$ is implementation-specific. $\overline{\text{GRST}}$ must be asserted on initial power up of the PCIxx12 controller. $\overline{\text{PRST}}$ must be asserted for subsequent warm resets.

Figure 3−13. System Diagram Implementing CardBus Device Class Power Management

3.8.1 1394 Power Management (Function 1)

The PCIxx12 controller complies with *PCI Bus Power Management Interface Specification*. The controller supports the D0 (uninitialized), D0 (active), D1, D2, and D3 power states as defined by the power-management definition in the *1394 Open Host Controller Interface Specification*, Appendix A.4 and *PCI Bus Power Management Specification*. $\overline{\text{PME}}$ is supported to provide notification of wake events. Per Section A.4.2, the 1394 OHCI sets PMCSR.PME_STS in the D0 state due to unmasked interrupt events. In previous OHCI implementations, unmasked interrupt events were interpreted as (IntEvent.n && IntMask.n && IntMask.masterIntEnable), where n represents a specific interrupt event. Based on feedback from Microsoft this implementation may cause problems with the existing Windows power-management arcitecture as a $\overline{\text{PME}}$ and an interrupt could be simultaneously signaled on a transition from the D1 to D0 state where interrupts were enabled to generate wake events. If bit 10 (ignore_mstrIntEna_for_pme) in the PCI miscellaneous configuration register (OHCI offset F0h, see Section 7.23) is set, then the controller implements the preferred behavior as (IntEvent.n && IntMask.n). Otherwise, the controller implements the preferred behavior as (IntEvent.n && IntMask.n && IntMask.masterIntEnable). In addition, when the ignore_mstrIntEna_for_pme bit is set, it causes bit 26 of the OHCI vendor ID register (OHCI offset 40h, see Section 8.15) to read 1b, otherwise, bit 26 reads 0b. An open drain buffer is used for $\overline{\text{PME}}$. If $\overline{\text{PME}}$ is enabled in the power-management control/status register (PCI offset A4h, see Section 4.43), then insertion of a PC Card causes the controller to assert $\overline{\text{PME}}$, which wakes the system from a low power state (D3, D2, or D1). The OS services PME and takes the PCIxx12 controller to the D0 state.

3.8.2 Integrated Low-Dropout Voltage Regulator (LDO-VR)

The PCIxx12 controller requires 1.5-V core voltage. The core power can be supplied by the controller itself using the internal LDO-VR. The core power can be alternatively supplied by an external power supply through the VR_PORT terminal. Table 3−14 lists the requirements for both the internal core power supply and the external core power supply.

Table 3−14. Requirements for Internal/External 1.5-V Core Power Supply

SUPPLY	V_{CC}	$\overline{VR_EN}$	VR_PORT	NOTE
Internal	3.3 V	GND	1.5-V output	Internal 1.5-V LDO-VR is enabled. A 1.0-µF bypass capacitor is required on the VR_PORT terminal for decoupling. This output is not for external use.
External	3.3 V	V_{CC}	1.5-V input	Internal 1.5-V LDO-VR is disabled. An external 1.5-V power supply, of minimum 50-mA capacity, is required. A 0.1-µF bypass capacitor on the VR_PORT terminal is required.

3.8.3 Clock Run Protocol

The PCI $\overline{CLKRUN}$ feature is the primary method of power management on the PCI interface of the PCIxx12 controller. $\overline{CLKRUN}$ signaling is provided through the MFUNC6 terminal. Since some chip sets do not implement $\overline{CLKRUN}$, this is not always available to the system designer, and alternate power-saving features are provided. For details on the $\overline{CLKRUN}$ protocol see the *PCI Mobile Design Guide*.

The controller does not permit the central resource to stop the PCI clock under any of the following conditions:

- Bit 1 (KEEPCLK) in the system control register (PCI offset 80h, see Section 4.29) is set.
- The 16-bit PC Card resource manager is busy.
- The PCIxx12 CardBus master state machine is busy. A cycle may be in progress on CardBus.
- The PCIxx12 master is busy. There may be posted data from CardBus, 1394, flash media core, SD host core, or Smart Card core to PCI in the controller or DMA is active.
- Interrupts are pending from CardBus, 1394, flash media core, SD host core, or Smart Card core
- The CardBus CCLK for the socket has not been stopped by the PCIxx12 CCLKRUN manager.
- Bit 0 (KEEP_PCLK) in the miscellaneous configuration register (PCI offset F0h, see Section 7.23) is set.
- The 1394 resource manager is busy.
- The PCIxx12 1394 master state machine is busy. A cycle may be in progress on 1394.
- PC Card interrogation is in progress.
- Flash media or Smart Card insertion/removal processing
- The 1394 bus is not idle.
- Smart card DES request or decryption in progress

The controller restarts the PCI clock using the CLKRUN protocol under any of the following conditions:

- A 16-bit PC Card IREQ or a CardBus CINT has been asserted by either card.
- A CardBus CBWAKE (CSTSCHG) or 16-bit PC Card STSCHG/RI event occurs in the socket.
- A CardBus attempts to start the CCLK using CCLKRUN.
- A CardBus card arbitrates for the CardBus bus using CREQ.
- A 1394 device changes the status of the twisted pair lines from idle to active.
- Bit 1 (KEEPCLK) in the system control register (PCI offset 80h, see Section 4.29) is set.
- Data is in any of the FIFOs (receive or transmit).
- The master state machine is busy.
- There are pending interrupts from CardBus, 1394, flash media core, SD host core, or Smart Card core.

3.8.4 CardBus PC Card Power Management

The PCIxx12 controller implements its own card power-management engine that can turn off the CCLK to a socket when there is no activity to the CardBus PC Card. The PCI clock-run protocol is followed on the CardBus $\overline{CCLKRUN}$ interface to control this clock management.

3.8.5 16-Bit PC Card Power Management

The COE bit (bit 7) of the ExCA power control register (ExCA offset 02h/802h, see Section 5.3) and PWRDWN bit (bit 0) of the ExCA global control register (ExCA offset 1Eh/81Eh, see Section 5.20) are provided for 16-bit PC Card power management. The COE bit places the card interface in a high-impedance state to save power. The power savings when using this feature are minimal. The COE bit resets the PC Card when used, and the PWRDWN bit does not. Furthermore, the PWRDWN bit is an automatic COE, that is, the PWRDWN performs the COE function when there is no card activity.

NOTE: The 16-bit PC Card must implement the proper pullup resistors for the COE and PWRDWN modes.

3.8.6 Suspend Mode

The $\overline{\text{SUSPEND}}$ signal, provided for backward compatibility, gates the $\overline{\text{PRST}}$ (PCI reset) signal and the $\overline{\text{GRST}}$ (global reset) signal from the PCIxx12 controller. Besides gating $\overline{\text{PRST}}$ and $\overline{\text{GRST}}$, $\overline{\text{SUSPEND}}$ also gates PCLK inside the controller in order to minimize power consumption.

It should also be noted that asynchronous signals, such as card status change interrupts and $\overline{\text{RI_OUT}}$, can be passed to the host system without a PCI clock. However, if card status change interrupts are routed over the serial interrupt stream, then the PCI clock must be restarted in order to pass the interrupt, because neither the internal oscillator nor an external clock is routed to the serial-interrupt state machine. Figure 3−14 is a signal diagram of the suspend function.

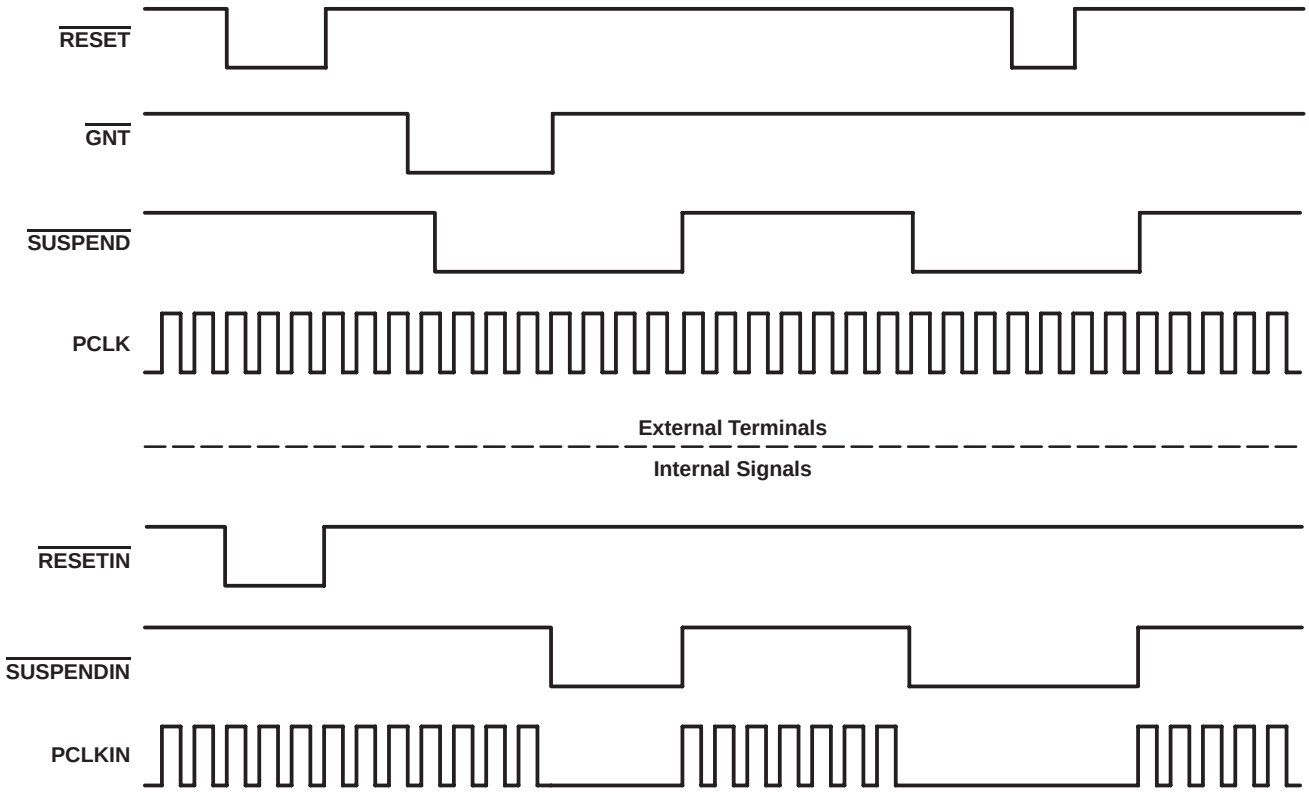

Figure 3−14. Signal Diagram of Suspend Function

3.8.7 Requirements for Suspend Mode

The suspend mode prevents the clearing of all register contents on the assertion of reset ($\overline{PRST}$ or $\overline{GRST}$) which would require the reconfiguration of the PCIxx12 controller by software. Asserting the $\overline{SUSPEND}$ signal places the PCI outputs of the controller in a high-impedance state and gates the PCLK signal internally to the controller unless a PCI transaction is currently in process ($\overline{GNT}$ is asserted). It is important that the PCI bus not be parked on the controller when $\overline{SUSPEND}$ is asserted because the outputs are in a high-impedance state.

The GPIOs, MFUNC signals, and $\overline{RI_OUT}$ signal are all active during $\overline{SUSPEND}$, unless they are disabled in the appropriate PCIxx12 registers.

3.8.8 Ring Indicate

The $\overline{RI_OUT}$ output is an important feature in power management, allowing a system to go into a suspended mode and wake-up on modem rings and other card events. TI-designed flexibility permits this signal to fit wide platform requirements. $\overline{RI_OUT}$ on the PCIxx12 controller can be asserted under any of the following conditions:

- A 16-bit PC Card modem in a powered socket asserts $\overline{RI}$ to indicate to the system the presence of an incoming call.
- A powered down CardBus card asserts CSTSCHG (CBWAKE) requesting system and interface wake-up.
- A powered CardBus card asserts CSTSCHG from the insertion/removal of cards or change in battery voltage levels.

Figure 3−15 shows various enable bits for the PCIxx12 $\overline{RI_OUT}$ function; however, it does not show the masking of CSC events. See Table 3−10 for a detailed description of CSC interrupt masks and flags.

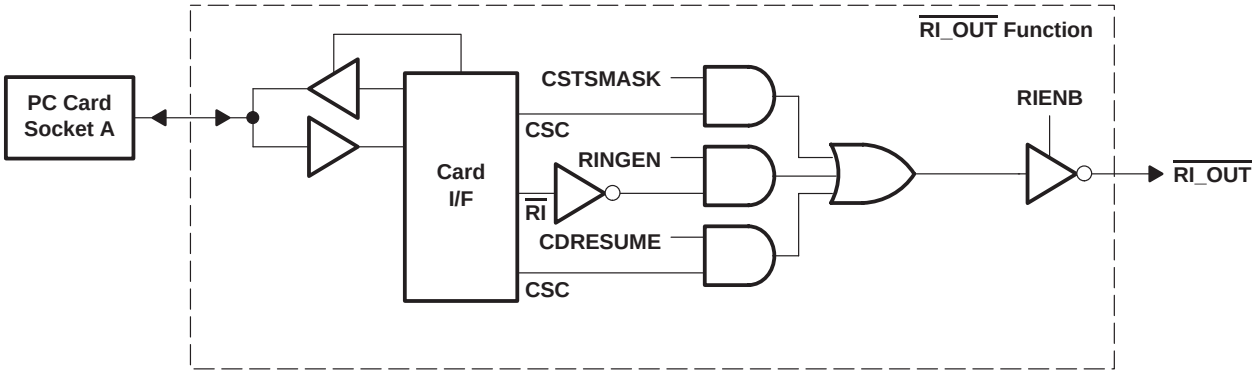

Figure 3−15. $\overline{RI_OUT}$ Functional Diagram

$\overline{RI}$ from the 16-bit PC Card interface is masked by bit 7 (RINGEN) in the ExCA interrupt and general control register (ExCA offset 03h/803h, see Section 5.4). This is programmed on a per-socket basis and is only applicable when a 16-bit card is powered in the socket.

The CBWAKE signaling to $\overline{RI_OUT}$ is enabled through the same mask as the CSC event for CSTSCHG. The mask bit (bit 0, CSTSMASK) is programmed through the socket mask register (CB offset 04h, see Section 6.2) in the CardBus socket registers.

$\overline{RI_OUT}$ can be routed through any of three different pins, $\overline{RI_OUT}/\overline{PME}$, MFUNC2, or MFUNC4. The $\overline{RI_OUT}$ function is enabled by setting bit 7 (RIENB) in the card control register (PCI offset 91h, see Section 4.37). The $\overline{PME}$ function is enabled by setting bit 8 (PME_ENABLE) in the power-management control/status register (PCI offset A4h, see Section 4.43). When bit 0 (RIMUX) in the system control register (PCI offset 80h, see Section 4.29) is set to 0b, both the $\overline{RI_OUT}$ function and the $\overline{PME}$ function are routed to the $\overline{RI_OUT}/\overline{PME}$ terminal. Therefore, in a system using both the $\overline{RI_OUT}$ function and the $\overline{PME}$ function, RIMUX must be set to 1b and $\overline{RI_OUT}$ must be routed to either MFUNC2 or MFUNC4.

3.8.9 PCI Power Management

3.8.9.1 CardBus (Function 0) Power Management

The *PCI Bus Power Management Interface Specification for PCI to CardBus Bridges* establishes the infrastructure required to let the operating system control the power of PCI functions. This is accomplished by defining a standard PCI interface and operations to manage the power of PCI functions on the bus. The PCI bus and the PCI functions can be assigned one of seven power-management states, resulting in varying levels of power savings.

The seven power-management states of PCI functions are:

- D0-uninitialized − Before controller configuration, controller not fully functional
- D0-active − Fully functional state
- D1 − Low-power state
- D2 − Low-power state
- $D3_{hot}$ − Low-power state. Transition state before $D3_{cold}$
- $D3_{cold}$ − $\overline{PME}$ signal-generation capable. Main power is removed and VAUX is available.
- $D3_{off}$ − No power and completely nonfunctional

NOTE 1: In the D0-uninitialized state, the PCIxx12 controller does not generate $\overline{PME}$ and/or interrupts. When bits 0 (IO_EN) and 1 (MEM_EN) of the command register (PCI offset 04h, see Section 4.4) are both set, the PCIxx12 controller switches the state to D0-active. Transition from $D3_{cold}$ to the D0-uninitialized state happens at the deassertion of $\overline{PRST}$. The assertion of $\overline{GRST}$ forces the controller to the D0-uninitialized state immediately.

NOTE 2: The PWR_STATE bits (bits 1−0) of the power-management control/status register (PCI offset A4h, see Section 4.43) only code for four power states, D0, D1, D2, and $D3_{hot}$. The differences between the three D3 states is invisible to the software because the controller is not accessible in the $D3_{cold}$ or $D3_{off}$ state.

Similarly, bus power states of the PCI bus are B0−B3. The bus power states B0−B3 are derived from the device power state of the originating bridge device.

For the operating system (OS) to manage the controller power states on the PCI bus, the PCI function must support four power-management operations. These operations are:

- Capabilities reporting
- Power status reporting
- Setting the power state
- System wake-up

The OS identifies the capabilities of the PCI function by traversing the new capabilities list. The presence of capabilities in addition to the standard PCI capabilities is indicated by a 1b in bit 4 (CAPLIST) of the status register (PCI offset 06h, see Section 4.5).

The capabilities pointer provides access to the first item in the linked list of capabilities. For the PCIxx12 controller, a CardBus bridge with PCI configuration space header type 2, the capabilities pointer is mapped to an offset of 14h. The first byte of each capability register block is required to be a unique ID of that capability. PCI power management has been assigned an ID of 01h. The next byte is a pointer to the next pointer item in the list of capabilities. If there are no more items in the list, then the next item pointer must be set to 0. The registers following the next item pointer are specific to the capability of the function. The PCI power-management capability implements the register block outlined in Table 3−15.

Table 3−15. Power-Management Registers

REGISTER NAME				OFFSET
Power-management capabilities		Next item pointer	Capability ID	A0h
Data	Power-management control/status register bridge support extensions	Power-management control/status (CSR)		A4h

The power-management capabilities register (PCI offset A2h, see Section 4.42) provides information on the capabilities of the function related to power management. The power-management control/status register (PCI offset A4h, see Section 4.43) enables control of power-management states and enables/monitors power-management events. The data register is an optional register that can provide dynamic data.

For more information on PCI power management, see the *PCI Bus Power Management Interface Specification for PCI to CardBus Bridges*.

3.8.9.2 OHCI 1394 (Function 1) Power Management

The PCIxx12 controller complies with the *PCI Bus Power Management Interface Specification*. The controller supports the D0 (unitialized), D0 (active), D1, D2, and D3 power states as defined by the power-management definition in the *1394 Open Host Controller Interface Specification*, Appendix A4.

Table 3−16. Function 1 Power-Management Registers

REGISTER NAME				OFFSET
Power-management capabilities		Next item pointer	Capability ID	44h
Data	Power-management control/status register bridge support extensions	Power-management control/status (CSR)		48h

3.8.9.3 Flash Media (Function 2) Power Management

The *PCI Bus Power Management Interface Specification* is applicable for the flash media dedicated sockets. This function supports the D0 and D3 power states.

Table 3−17. Function 2 Power-Management Registers

REGISTER NAME				OFFSET
Power-management capabilities		Next item pointer	Capability ID	44h
Data	Power-management control/status register bridge support extensions	Power-management control/status (CSR)		48h

3.8.9.4 SD Host (Function 3) Power Management

The *PCI Bus Power Management Interface Specification* is applicable for the SD host dedicated sockets. This function supports the D0 and D3 power states.

Table 3−18. Function 3 Power-Management Registers

REGISTER NAME				OFFSET
Power-management capabilities		Next item pointer	Capability ID	80h
Data	Power-management control/status register bridge support extensions	Power-management control/status (CSR)		84h

3.8.9.5 Smart Card (Function 4) Power Management

The *PCI Bus Power Management Interface Specification* is applicable for the Smart Card dedicated sockets. This function supports the D0 and D3 power states.

Table 3−19. Function 4 Power-Management Registers

REGISTER NAME				OFFSET
Power-management capabilities		Next item pointer	Capability ID	44h
Data	Power-management control/status register bridge support extensions	Power-management control/status (CSR)		48h

3.8.10 CardBus Bridge Power Management

The *PCI Bus Power Management Interface Specification for PCI to CardBus Bridges* was approved by PCMCIA in December of 1997. This specification follows the device and bus state definitions provided in the *PCI Bus Power Management Interface Specification* published by the PCI Special Interest Group (SIG). The main issue addressed in the *PCI Bus Power Management Interface Specification for PCI to CardBus Bridges* is wake-up from $D3_{hot}$ or $D3_{cold}$ without losing wake-up context (also called $\overline{PME}$ context).

The specific issues addressed by the *PCI Bus Power Management Interface Specification for PCI to CardBus Bridges* for D3 wake-up are as follows:

- Preservation of device context. The specification states that a reset must occur during the transition from D3 to D0. Some method to preserve wake-up context must be implemented so that the reset does not clear the $\overline{PME}$ context registers.

- Power source in $D3_{cold}$ if wake-up support is required from this state.

The Texas Instruments PCIxx12 controller addresses these D3 wake-up issues in the following manner:

- Two resets are provided to handle preservation of $\overline{PME}$ context bits:
  - Global reset ($\overline{GRST}$) is used only on the initial boot up of the system after power up. It places the controller in its default state and requires BIOS to configure the controller before becoming fully functional.
  - PCI reset ($\overline{PRST}$) has dual functionality based on whether $\overline{PME}$ is enabled or not. If $\overline{PME}$ is enabled, then $\overline{PME}$ context is preserved. If $\overline{PME}$ is not enabled, then $\overline{PRST}$ acts the same as a normal PCI reset. Please see the master list of $\overline{PME}$ context bits in Section 3.8.12.
- Power source in $D3_{cold}$ if wake-up support is required from this state. Since V_{CC} is removed in $D3_{cold}$, an auxiliary power source must be supplied to the PCIxx12 V_{CC} terminals. Consult the *PCI14xx Implementation Guide for D3 Wake-Up* or the *PCI Power Management Interface Specification for PCI to CardBus Bridges* for further information.

3.8.11 ACPI Support

The *Advanced Configuration and Power Interface (ACPI) Specification* provides a mechanism that allows unique pieces of hardware to be described to the ACPI driver. The PCIxx12 controller offers a generic interface that is compliant with ACPI design rules.

Two doublewords of general-purpose ACPI programming bits reside in PCIxx12 PCI configuration space at offset 88h. The programming model is broken into status and control functions. In compliance with ACPI, the top level event status and enable bits reside in the general-purpose event status register (PCI offset 88h, see Section 4.31) and general-purpose event enable register (PCI offset 89h, see Section 4.32). The status and enable bits are implemented as defined by ACPI and illustrated in Figure 3−16.

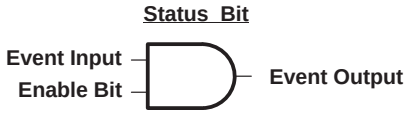

Figure 3−16. Block Diagram of a Status/Enable Cell

The status and enable bits generate an event that allows the ACPI driver to call a control method associated with the pending status bit. The control method can then control the hardware by manipulating the hardware control bits or by investigating child status bits and calling their respective control methods. A hierarchical implementation would be somewhat limiting, however, as upstream devices would have to remain in some level of power state to report events.

For more information of ACPI, see the *Advanced Configuration and Power Interface (ACPI) Specification.*

3.8.12 Master List of $\overline{PME}$ Context Bits and Global Reset-Only Bits

$\overline{PME}$ context bit means that the bit is cleared only by the assertion of $\overline{GRST}$ when the $\overline{PME}$ enable bit, bit 8 of the power-management control/status register (PCI offset A4h, see Section 4.43) is set. If $\overline{PME}$ is not enabled, then these bits are cleared when either $\overline{PRST}$ or $\overline{GRST}$ is asserted.

The $\overline{PME}$ context bits (function 0) are:

- Bridge control register (PCI offset 3Eh, see Section 4.25): bit 6
- System control register (PCI offset 80h, see Section 4.29): bits 10−8
- Power-management control/status register (PCI offset A4h, see Section 4.43): bit 15
- ExCA power control register (ExCA 802h, see Section 5.3): bits 7, 5 (82365SL mode only), 7, 4, 3, 1, 0
- ExCA interrupt and general control (ExCA 803h, see Section 5.4): bits 6, 5

- ExCA card status-change register (ExCA 804h, see Section 5.5): bits 3−0
- ExCA card status-change interrupt configuration register (ExCA 805h, see Section 5.6): bits 3−0
- ExCA card detect and general control register (ExCA 816h, see Section 5.19): bits 7, 6
- Socket event register (CardBus offset 00h, see Section 6.1): bits 3−0
- Socket mask register (CardBus offset 04h, see Section 6.2): bits 3−0
- Socket present state register (CardBus offset 08h, see Section 6.3): bits 13−7, 5−1
- Socket control register (CardBus offset 10h, see Section 6.5): bits 6−4, 2−0

Global reset-only bits, as the name implies, are cleared only by $\overline{\text{GRST}}$. These bits are never cleared by $\overline{\text{PRST}}$, regardless of the setting of the $\overline{\text{PME}}$ enable bit. The $\overline{\text{GRST}}$ signal is gated only by the $\overline{\text{SUSPEND}}$ signal. This means that assertion of $\overline{\text{SUSPEND}}$ blocks the $\overline{\text{GRST}}$ signal internally, thus preserving all register contents. Figure 3−13 is a diagram showing the application of $\overline{\text{GRST}}$ and $\overline{\text{PRST}}$.

The global reset-only bits (function 0) are:

- Status register (PCI offset 06h, see Section 4.5): bits 15−11, 8
- Secondary status register (PCI offset 16h, see Section 4.14): bits 15−11, 8
- Subsystem vendor ID register (PCI offset 40h, see Section 4.26): bits 15–0
- Subsystem ID register (PCI offset 42h, see Section 4.27): bits 15–0
- PC Card 16-bit I/F legacy-mode base-address register (PCI offset 44h, see Section 4.28): bits 31−0
- System control register (PCI offset 80h, see Section 4.29): bits 31−24, 22−13, 11, 6−0
- General control register (PCI offset 84h, see Section 4.30): bits 31−16, 10−0
- General-purpose event status register (PCI offset 88h, see Section 4.31): bits 7, 6, 4−0
- General-purpose event enable register (PCI offset 89h, see Section 4.32): bits 7, 6, 4−0
- General-purpose output register (PCI offset 8Bh, see Section 4.34): bits 4−0
- Multifunction routing register (PCI offset 8Ch, see Section 4.35): bits 31−0
- Retry status register (PCI offset 90h, see Section 4.36): bits 7−5, 3, 1
- Card control register (PCI offset 91h, see Section 4.37): bits 7, 2−0
- Device control register (PCI offset 92h, see Section 4.38): bits 7−5, 3−0
- Diagnostic register (PCI offset 93h, see Section 4.39): bits 7−0
- Power-management capabilities register (PCI offset A2h, see Section 4.42): bit 15
- Power-management CSR register (PCI offset A4h, see Section 4.43): bits 15, 8
- Serial bus data register (PCI offset B0h, see Section 4.46): bits 7−0
- Serial bus index register (PCI offset B1h, see Section 4.47): bits 7−0
- Serial bus slave address register (PCI offset B2h, see Section 4.48): bits 7−0
- Serial bus control/status register (PCI offset B3h, see Section 4.49): bits 7, 3−0
- ExCA identification and revision register (ExCA 800h, see Section 5.1): bits 7−0
- ExCA global control register (ExCA 81Eh, see Section 5.20): bits 2−0
- CardBus socket power-management register (CardBus 20h, see Section 6.6): bits 25, 24

The global reset-only bit (function 1) is:

- Subsystem vendor ID register (PCI offset 2Ch, see Section 7.12): bits 15−0
- Subsystem ID register (PCI offset 2Eh, see Section 7.12): bits 15−0
- Minimum grant and maximum latency register (PCI offset 3Eh, see Section 7.16): bits 15−0
- Power-management control and status register (PCI offset 48h, see Section 7.20): bits 15, 8, 1, 0
- PHY control register (PCI offset ECh, see Section 7.22): bits 7, 4−0
- Miscellaneous configuration register (PCI offset F0h, see Section 7.23): bits 15−7, 5−0
- Link enhancement control register (PCI offset F4h, see Section 7.24): bits 15−12, 10, 8, 7, 2, 1
- Subsystem access register (PCI offset F8h, see Section 7.25): bits 31−0
- OHCI version register (OHCI offset 00h, see Section 8.1): bits 24
- Bus options register (OHCI offset 20h, see Section 8.9): bits 15−12
- GUID high register (OHCI offset 24h, see Section 8.10): bits 31−0
- GUID low register (OHCI offset 28h, see Section 8.11): bits 31−0
- Host controller control register (OHCI offset 50h/54h, see Section 8.16): bit 23

- Link control register (OHCI offset E0h/E4h, see Section 8.31): bit 6
- Link enhancement control set/clear register (TI Extension offset A88/A8Ch, see Section 9.4): bits 15−12, 10, 8, 7, 2, 1

The global reset-only (function 2) register bits:

- Subsystem vendor ID register (PCI offset 2Ch, see Section 11.9): bits 15–0
- Subsystem ID register (PCI offset 2Eh, see Section 11.10): bits 15–0
- Power-management control and status register (PCI offset 48h, see Section 11.18): bits 15, 8, 1, 0
- General control register (PCI offset 4Ch, see Section 11.21): bits 7−4, 2–0
- Subsystem access register (PCI offset 50h, see Section 11.22): bits 31−0
- Diagnostic register (PCI offset 54h, see Section 11.23): bits 31–0

The global reset-only (function 3) register bits:

- Subsystem vendor ID register (PCI offset 2Ch, see Section 12.9): bits 15–0
- Subsystem ID register (PCI offset 2Eh, see Section 12.10): bits 15–0
- Power-management control and status register (PCI offset 84h, see Section 12.19): bits 15, 8, 1, 0
- General control register (PCI offset 88h, see Section 12.22): bits 6−3, 0
- Subsystem access register (PCI offset 8Ch, see Section 12.23): bits 31−0
- Diagnostic register (PCI offset 90h, see Section 12.24): bits 31–0
- Slot 0 max current register (PCI offset 94h, see Section 12.25): bits 7−0

The global reset-only (function 4) register bits:

- Subsystem vendor ID register (PCI offset 2Ch, see Section 13.10): bits 15–0
- Subsystem ID register (PCI offset 2Eh, see Section 13.11): bits 15–0
- Power-management control and status register (PCI offset 48h, see Section 13.19): bits 15, 8, 1, 0
- General control register (PCI offset 4Ch, see Section 13.22): bits 7−4, 0
- Subsystem ID alias register (PCI offset 50h, see Section 13.23): bits 31−0
- Class code alias register (PCI offset 54h, see Section 13.24): bits 31−0
- Smart card configuration 1 register (PCI offset 58h, see Section 13.25): bits 31−0
- Smart card configuration 2 register (PCI offset 5Ch, see Section 13.26): bits 31−0

3.9 IEEE 1394 Application Information

3.9.1 PHY Port Cable Connection

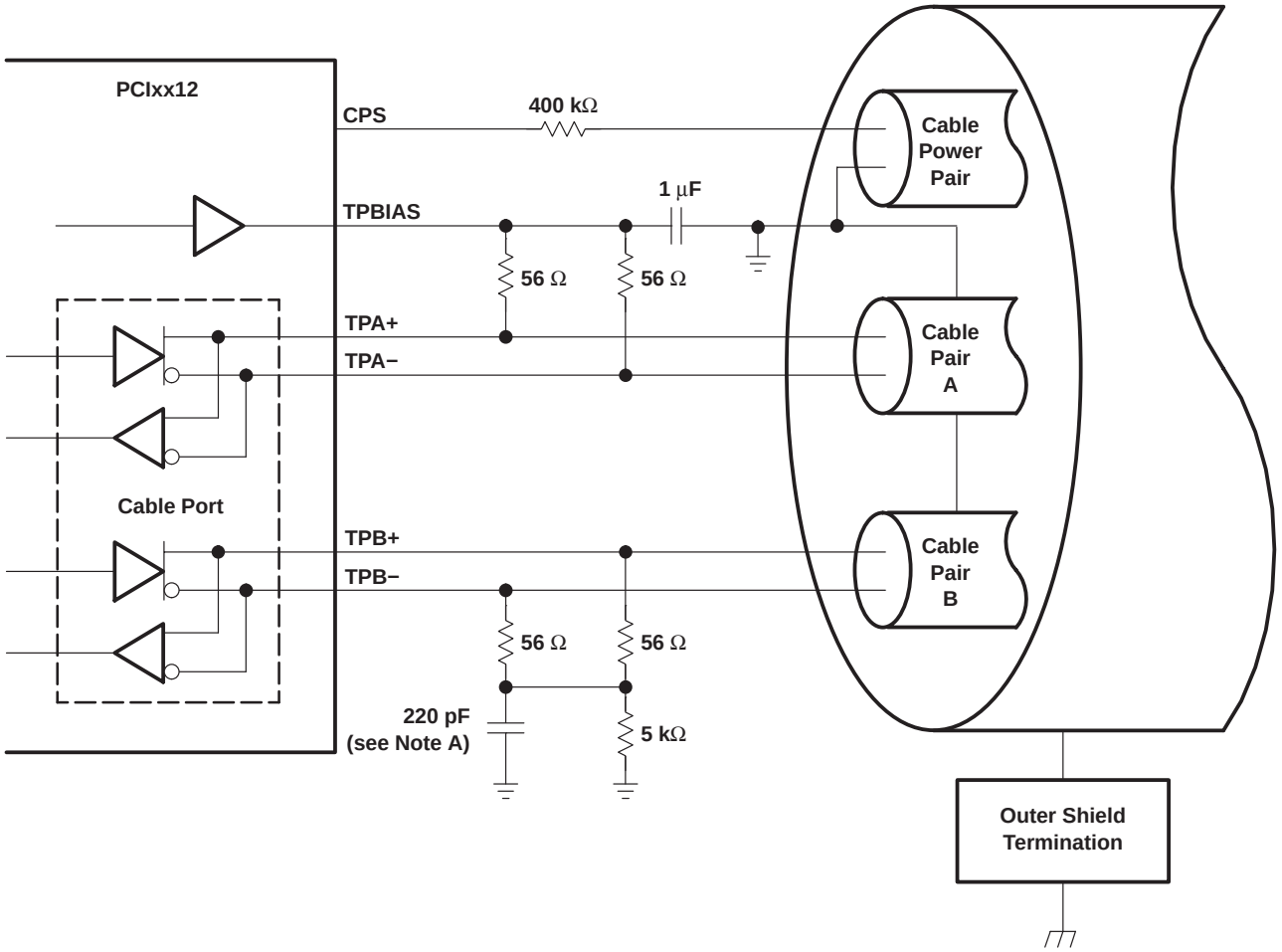

NOTE A: IEEE Std 1394-1995 calls for a 250-pF capacitor, which is a nonstandard component value. A 220-pF capacitor is recommended.

Figure 3−17. TP Cable Connections

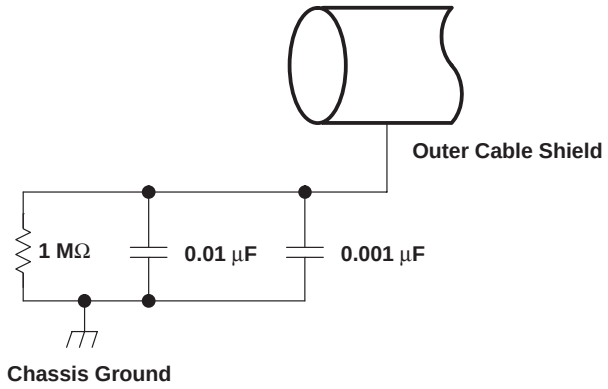

Figure 3−18. Typical Compliant DC Isolated Outer Shield Termination

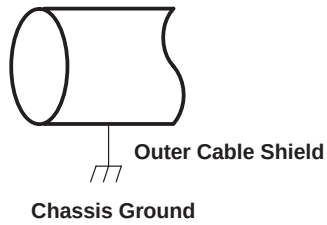

Figure 3−19. Non-DC Isolated Outer Shield Termination

3.9.2 Crystal Selection

The PCIxx12 controller is designed to use an external 24.576-MHz crystal connected between the XI and XO terminals to provide the reference for an internal oscillator circuit. This oscillator in turn drives a PLL circuit that generates the various clocks required for transmission and resynchronization of data at the S100 through S400 media data rates.

A variation of less than ±100 ppm from nominal for the media data rates is required by IEEE Std 1394-1995. Adjacent PHYs may therefore have a difference of up to 200 ppm from each other in their internal clocks, and PHY devices must be able to compensate for this difference over the maximum packet length. Large clock variations may cause resynchronization overflows or underflows, resulting in corrupted packet data.

The following are some typical specifications for crystals used with the PHYs from TI in order to achieve the required frequency accuracy and stability:

- Crystal mode of operation: Fundamental
- Frequency tolerance @ 25°C: Total frequency variation for the complete circuit is ±100 ppm. A crystal with ±30 ppm frequency tolerance is recommended for adequate margin.
- Frequency stability (over temperature and age): A crystal with ±30 ppm frequency stability is recommended for adequate margin.

  NOTE: The total frequency variation must be kept below ±100 ppm from nominal with some allowance for error introduced by board and device variations. Trade-offs between frequency tolerance and stability may be made as long as the total frequency variation is less than ±100 ppm. For example, the frequency tolerance of the crystal may be specified at 50 ppm and the temperature tolerance may be specified at 30 ppm to give a total of 80 ppm possible variation due to the crystal alone. Crystal aging also contributes to the frequency variation.

- Load capacitance: For parallel resonant mode crystal circuits, the frequency of oscillation is dependent upon the load capacitance specified for the crystal. Total load capacitance (C_L) is a function of not only the discrete load capacitors, but also board layout and circuit. It is recommended that load capacitors with a maximum of ±5% tolerance be used.

For example, load capacitors (C9 and C10 in Figure 3−20) of 16 pF each were appropriate for the layout of the PCIxx12 evaluation module (EVM), which uses a crystal specified for 12-pF loading. The load specified for the crystal includes the load capacitors (C9 and C10), the loading of the PHY pins (C_{PHY}), and the loading of the board itself (C_{BD}). The value of C_{PHY} is typically about 1 pF, and C_{BD} is typically 0.8 pF per centimeter of board etch; a *typical* board can have 3 pF to 6 pF or more. The load capacitors C9 and C10 combine as capacitors in series so that the total load capacitance is:

$$C_L = \frac{C9 \times C10}{C9 + C10} + C_{PHY} + C_{BD}$$

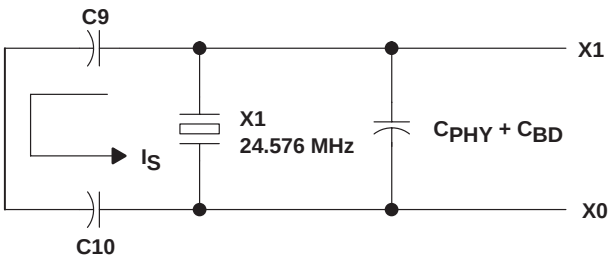

Figure 3−20. Load Capacitance for the PCIxx12 PHY

The layout of the crystal portion of the PHY circuit is important for obtaining the correct frequency, minimizing noise introduced into the PHY phase-lock loop, and minimizing any emissions from the circuit. The crystal and two load capacitors must be considered as a unit during layout. The crystal and the load capacitors must be placed as close as possible to one another while minimizing the loop area created by the combination of the three components. Varying the size of the capacitors may help in this. Minimizing the loop area minimizes the effect of the resonant current (Is) that flows in this resonant circuit. This layout unit (crystal and load capacitors) must then be placed as close as possible to the PHY X1 and X0 terminals to minimize etch lengths, as shown in Figure 3−21.

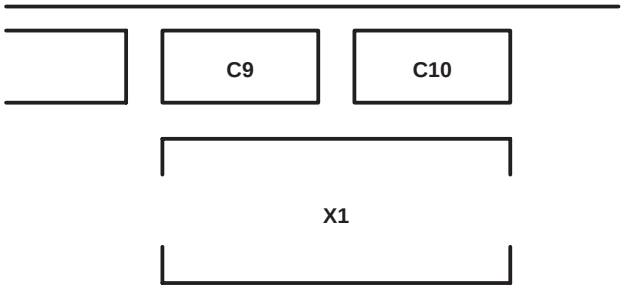

For more details on crystal selection, see application report SLLA051 available from the TI website: http://www.ti.com/sc/1394.

Figure 3−21. Recommended Crystal and Capacitor Layout

3.9.3 Bus Reset

In the PCIxx12 controller, the initiate bus reset (IBR) bit may be set to 1b in order to initiate a bus reset and initialization sequence. The IBR bit is located in PHY register 1, along with the root-holdoff bit (RHB) and Gap_Count field, as required by IEEE Std 1394a-2000. Therefore, whenever the IBR bit is written, the RHB and Gap_Count are also written.

The RHB and Gap_Count may also be updated by PHY-config packets. The PCIxx12 controller is IEEE 1394a-2000 compliant, and therefore both the reception and transmission of PHY-config packets cause the RHB and Gap_Count to be loaded, unlike older IEEE 1394-1995 compliant PHY devices which decode only received PHY-config packets.

The gap-count is set to the maximum value of 63 after 2 consecutive bus resets without an intervening write to the Gap_Count, either by a write to PHY register 1 or by a PHY-config packet. This mechanism allows a PHY-config packet to be transmitted and then a bus reset initiated so as to verify that all nodes on the bus have updated their RHBs and Gap_Count values, without having the Gap_Count set back to 63 by the bus reset. The subsequent connection of a new node to the bus, which initiates a bus reset, then causes the Gap_Count of each node to be set to 63. Note, however, that if a subsequent bus reset is instead initiated by a write to register 1 to set the IBR bit, all other nodes on the bus have their Gap_Count values set to 63, while this node Gap_Count remains set to the value just loaded by the write to PHY register 1.

Therefore, in order to maintain consistent gap-counts throughout the bus, the following rules apply to the use of the IBR bit, RHB, and Gap_Count in PHY register 1:

- Following the transmission of a PHY-config packet, a bus reset must be initiated in order to verify that all nodes have correctly updated their RHBs and Gap_Count values and to ensure that a subsequent new connection to the bus causes the Gap_Count to be set to 63 on all nodes in the bus. If this bus reset is initiated by setting the IBR bit to 1b, then the RHB and Gap_Count field must also be loaded with the correct values consistent with the just transmitted PHY-config packet. In the PCIxx12 controller, the RHB and Gap_Count are updated to their correct values upon the transmission of the PHY-config packet, so these values may first be read from register 1 and then rewritten.
- Other than to initiate the bus reset, which must follow the transmission of a PHY-config packet, whenever the IBR bit is set to 1b in order to initiate a bus reset, the Gap_Count value must also be set to 63 so as to be consistent with other nodes on the bus, and the RHB must be maintained with its current value.
- The PHY register 1 must not be written to except to set the IBR bit. The RHB and Gap_Count must not be written without also setting the IBR bit to 1b.

An alternative and preferred method is for software to use the initiate short bus reset (ISBR) in PHY register 5 since it does not have any side effects on the gap count.

4 PC Card Controller Programming Model

This chapter describes the PCIxx12 PCI configuration registers that make up the 256-byte PCI configuration header for each PCIxx12 function. There are some bits which affect more than function 0, but which, in order to work properly, must be accessed only through function 0. These are called global bits. Registers containing one or more global bits are denoted by § in Table 4−2.

Any bit followed by a † is not cleared by the assertion of $\overline{\text{PRST}}$ (see *CardBus Bridge Power Management*, Section 3.8.10, for more details) if $\overline{\text{PME}}$ is enabled (PCI offset A4h, bit 8). In this case, these bits are cleared only by $\overline{\text{GRST}}$. If $\overline{\text{PME}}$ is not enabled, then these bits are cleared by $\overline{\text{GRST}}$ or $\overline{\text{PRST}}$. These bits are sometimes referred to as PME context bits and are implemented to allow $\overline{\text{PME}}$ context to be preserved during the transition from $D3_{hot}$ or $D3_{cold}$ to D0.

If a bit is followed by a ‡, then this bit is cleared only by $\overline{\text{GRST}}$ in all cases (not conditional on $\overline{\text{PME}}$ being enabled). These bits are intended to maintain device context such as interrupt routing and MFUNC programming during warm resets.

A bit description table, typically included when the register contains bits of more than one type or purpose, indicates bit field names, a detailed field description, and field access tags which appear in the *type* column. Table 4−1 describes the field access tags.

Table 4−1. Bit Field Access Tag Descriptions

ACCESS TAG	NAME	MEANING
R	Read	Field can be read by software.
W	Write	Field can be written by software to any value.
S	Set	Field can be set by a write of 1b. Writes of 0b have no effect.
C	Clear	Field can be cleared by a write of 1b. Writes of 0b have no effect.
U	Update	Field can be autonomously updated by the PCIxx12 controller.

4.1 PCI Configuration Register Map (Function 0)

The PCIxx12 controller is a multifunction PCI device, and the PC Card controller is integrated as PCI function 0. The configuration header, compliant with the *PCI Local Bus Specification* as a CardBus bridge header, is *PC99/PC2001* compliant as well. Table 4−2 illustrates the PCI configuration register map, which includes both the predefined portion of the configuration space and the user-definable registers.

Table 4−2. Function 0 PCI Configuration Register Map

REGISTER NAME				OFFSET
Device ID		Vendor ID		00h
Status ‡		Command		04h
Class code			Revision ID	08h
BIST	Header type	Latency timer	Cache line size	0Ch
CardBus socket registers/ExCA base address register				10h
Secondary status ‡		Reserved	Capability pointer	14h
CardBus latency timer	Subordinate bus number	CardBus bus number	PCI bus number	18h
CardBus memory base register 0				1Ch
CardBus memory limit register 0				20h
CardBus memory base register 1				24h
CardBus memory limit register 1				28h

‡ One or more bits in this register are cleared only by the assertion of $\overline{\text{GRST}}$.

Table 4−2. Function 0 PCI Configuration Register Map (Continued)

REGISTER NAME				OFFSET
CardBus I/O base register 0				2Ch
CardBus I/O limit register 0				30h
CardBus I/O base register 1				34h
CardBus I/O limit register 1				38h
Bridge control †		Interrupt pin	Interrupt line	3Ch
Subsystem ID ‡		Subsystem vendor ID ‡		40h
PC Card 16-bit I/F legacy-mode base-address ‡				44h
Reserved				48h−7Ch
System control †‡§				80h
General control ‡§		Reserved	MC_CD debounce ‡	84h
General-purpose output ‡	General-purpose input	General-purpose event enable ‡	General-purpose event status ‡	88h
Multifunction routing status ‡				8Ch
Diagnostic ‡§	Device control ‡§	Card control ‡§	Retry status ‡§	90h
Reserved				94h−9Ch
Power management capabilities ‡		Next item pointer	Capability ID	A0h
Power management data (Reserved)	Power management control/status bridge support extensions	Power management control/status †‡		A4h
Reserved				A8h−ACh
Serial bus control/status ‡	Serial bus slave address ‡	Serial bus index ‡	Serial bus data ‡	B0h
Reserved				B4h−FCh

† One or more bits in this register are PME context bits and can be cleared only by the assertion of $\overline{\text{GRST}}$ when $\overline{\text{PME}}$ is enabled. If $\overline{\text{PME}}$ is not enabled, then this bit is cleared by the assertion of $\overline{\text{PRST}}$ or $\overline{\text{GRST}}$.
‡ One or more bits in this register are cleared only by the assertion of $\overline{\text{GRST}}$.
§ One or more bits in this register are global in nature and must be accessed only through function 0.

4.2 Vendor ID Register

The vendor ID register contains a value allocated by the PCI SIG that identifies the manufacturer of the PCI device. The vendor ID assigned to Texas Instruments is 104Ch.

PCI register offset: 00h (Function 0)
Register type: Read-only
Default value: 104Ch

BIT NUMBER	15	14	13	12	11	10	9	8	7	6	5	4	3	2	1	0
RESET STATE	0	0	0	1	0	0	0	0	0	1	0	0	1	1	0	0

4.3 Device ID Register Function 0

This read-only register contains the device ID assigned by TI to the PCIxx12 CardBus controller functions.

PCI register offset: 02h (Function 0)
Register type: Read-only
Default value: 8039h

BIT NUMBER	15	14	13	12	11	10	9	8	7	6	5	4	3	2	1	0
RESET STATE	1	0	0	0	0	0	0	0	0	0	1	1	1	0	0	1

4.4 Command Register

The PCI command register provides control over the PCIxx12 interface to the PCI bus. All bit functions adhere to the definitions in the *PCI Local Bus Specification* (see Table 4−3). None of the bit functions in this register are shared among the PCIxx12 PCI functions. Five command registers exist in the controller, one for each function. Software manipulates the functions as separate entities when enabling functionality through the command register. The SERR_EN and PERR_EN enable bits in this register are internally-wired OR between the five functions, and these control bits appear to software to be separate for each function.

PCI register offset: 04h
Register type: Read-only, Read/Write
Default value: 0000h

BIT NUMBER	15	14	13	12	11	10	9	8	7	6	5	4	3	2	1	0
RESET STATE	0	0	0	0	0	0	0	0	0	0	0	0	0	0	0	0

Table 4−3. Command Register Description

BIT	SIGNAL	TYPE	FUNCTION
15−11	RSVD	R	Reserved. Bits 15−11 return 00000b when read.
10	INT_DISABLE	RW	$\overline{\text{INTx}}$ disable. When set to 1b, this bit disables the function from asserting interrupts on the $\overline{\text{INTx}}$ signals. 0 = $\overline{\text{INTx}}$ assertion is enabled (default) 1 = $\overline{\text{INTx}}$ assertion is disabled
9	FBB_EN	R	Fast back-to-back enable. The controller does not generate fast back-to-back transactions; therefore, this bit is read-only. This bit returns a 0b when read.
8	SERR_EN	RW	System error ($\overline{\text{SERR}}$) enable. This bit controls the enable for the $\overline{\text{SERR}}$ driver on the PCI interface. $\overline{\text{SERR}}$ can be asserted after detecting an address parity error on the PCI bus. Both this bit and bit 6 must be set for the controller to report address parity errors. 0 = Disables the $\overline{\text{SERR}}$ output driver (default) 1 = Enables the $\overline{\text{SERR}}$ output driver
7	RSVD	R	Reserved. Bit 7 returns 0b when read.
6	PERR_EN	RW	Parity error response enable. This bit controls the PCIxx12 response to parity errors through the $\overline{\text{PERR}}$ signal. Data parity errors are indicated by asserting $\overline{\text{PERR}}$, while address parity errors are indicated by asserting $\overline{\text{SERR}}$. 0 = Controller ignores detected parity errors (default) 1 = Controller responds to detected parity errors
5	VGA_EN	RW	VGA palette snoop. When set to 1b, palette snooping is enabled (i.e., the controller does not respond to palette register writes and snoops the data). When the bit is 0b, the controller treats all palette accesses like all other accesses.
4	MWI_EN	R	Memory write-and-invalidate enable. This bit controls whether a PCI initiator device can generate memory write-and-invalidate commands. The controller does not support memory write-and-invalidate commands, it uses memory write commands instead; therefore, this bit is hardwired to 0b. This bit returns 0b when read. Writes to this bit have no effect.
3	SPECIAL	R	Special cycles. This bit controls whether or not a PCI device ignores PCI special cycles. The controller does not respond to special cycle operations; therefore, this bit is hardwired to 0b. This bit returns 0b when read. Writes to this bit have no effect.
2	MAST_EN	RW	Bus master control. This bit controls whether or not the controller can act as a PCI bus initiator (master). The controller can take control of the PCI bus only when this bit is set. 0 = Disables the PCIxx12 ability to generate PCI bus accesses (default) 1 = Enables the PCIxx12 ability to generate PCI bus accesses
1	MEM_EN	RW	Memory space enable. This bit controls whether or not the controller can claim cycles in PCI memory space. 0 = Disables the PCIxx12 response to memory space accesses (default) 1 = Enables the PCIxx12 response to memory space accesses
0	IO_EN	RW	I/O space control. This bit controls whether or not the controller can claim cycles in PCI I/O space. 0 = Disables the controller from responding to I/O space accesses (default) 1 = Enables the controller to respond to I/O space accesses

4.5 Status Register

The status register provides device information to the host system. Bits in this register can be read normally. A bit in the status register is reset when a 1b is written to that bit location; a 0b written to a bit location has no effect. All bit functions adhere to the definitions in the *PCI Bus Specification*, as seen in the bit descriptions. PCI bus status is shown through each function. See Table 4−4 for a complete description of the register contents.

PCI register offset: 06h (Function 0)
Register type: Read-only, Read/Write
Default value: 0210h

BIT NUMBER	15	14	13	12	11	10	9	8	7	6	5	4	3	2	1	0
RESET STATE	0	0	0	0	0	0	1	0	0	0	0	1	0	0	0	0

Table 4−4. Status Register Description

BIT	SIGNAL	TYPE	FUNCTION
15 ‡	PAR_ERR	RW	Detected parity error. This bit is set when a parity error is detected, either an address or data parity error. Write a 1b to clear this bit.
14 ‡	SYS_ERR	RW	Signaled system error. This bit is set when $\overline{\text{SERR}}$ is enabled and the controller signaled a system error to the host. Write a 1b to clear this bit.
13 ‡	MABORT	RW	Received master abort. This bit is set when a cycle initiated by the controller on the PCI bus has been terminated by a master abort. Write a 1b to clear this bit.
12 ‡	TABT_REC	RW	Received target abort. This bit is set when a cycle initiated by the controller on the PCI bus was terminated by a target abort. Write a 1b to clear this bit.
11 ‡	TABT_SIG	RW	Signaled target abort. This bit is set by the controller when it terminates a transaction on the PCI bus with a target abort. Write a 1b to clear this bit.
10−9	PCI_SPEED	R	DEVSEL timing. These bits encode the timing of $\overline{\text{DEVSEL}}$ and are hardwired to 01b indicating that the controller asserts this signal at a medium speed on nonconfiguration cycle accesses.
8 ‡	DATAPAR	RW	Data parity error detected. Write a 1b to clear this bit. 0 = The conditions for setting this bit have not been met 1 = A data parity error occurred and the following conditions were met: a. $\overline{\text{PERR}}$ was asserted by any PCI device including the controller b. The controller was the bus master during the data parity error c. Bit 6 (PERR_EN) in the command register (offset 04h, see Section 4.4) is set
7	FBB_CAP	R	Fast back-to-back capable. The controller cannot accept fast back-to-back transactions; thus, this bit is hardwired to 0b.
6	UDF	R	UDF supported. The controller does not support user-definable features; therefore, this bit is hardwired to 0b.
5	66MHZ	R	66-MHz capable. The controller operates at a maximum PCLK frequency of 33 MHz; therefore, this bit is hardwired to 0b.
4	CAPLIST	R	Capabilities list. This bit returns 1b when read. This bit indicates that capabilities in addition to standard PCI capabilities are implemented. The linked list of PCI power-management capabilities is implemented in this function.
3	INT_STATUS	RU	Interrupt status. This bit reflects the interrupt status of the function. Only when bit 10 (INT_DISABLE) in the command register (PCI offset 04h, see Section 4.4) is a 0b and this bit is a 1b, is the function's $\overline{\text{INTx}}$ signal asserted. Setting the INT_DISABLE bit to a 1b has no effect on the state of this bit.
2−0	RSVD	R	Reserved. These bits return 000b when read.

‡ This bit is cleared only by the assertion of $\overline{\text{GRST}}$.

4.6 Revision ID Register

The revision ID register indicates the silicon revision of the controller.

PCI register offset: 08h (Function 0)
Register type: Read-only
Default value: 00h

BIT NUMBER	7	6	5	4	3	2	1	0
RESET STATE	0	0	0	0	0	0	0	0

4.7 Class Code Register

The class code register recognizes PCIxx12 function 0 as a bridge device (06h) and a CardBus bridge device (07h), with a 00h programming interface.

PCI register offset: 09h (Function 0)
Register type: Read-only
Default value: 06 0700h

BIT NUMBER	23	22	21	20	19	18	17	16	15	14	13	12	11	10	9	8	7	6	5	4	3	2	1	0
NAME	Base class								Subclass								Programming interface							
RESET STATE	0	0	0	0	0	1	1	0	0	0	0	0	0	1	1	1	0	0	0	0	0	0	0	0

4.8 Cache Line Size Register

The cache line size register is programmed by host software to indicate the system cache line size.

PCI register offset: 0Ch (Function 0)
Register type: Read/Write
Default value: 00h

BIT NUMBER	7	6	5	4	3	2	1	0
RESET STATE	0	0	0	0	0	0	0	0

4.9 Latency Timer Register

The latency timer register specifies the latency timer for the controller, in units of PCI clock cycles. When the controller is a PCI bus initiator and asserts $\overline{\text{FRAME}}$, the latency timer begins counting from zero. If the latency timer expires before the PCIxx12 transaction has terminated, then the controller terminates the transaction when its $\overline{\text{GNT}}$ is deasserted.

PCI register offset: 0Dh
Register type: Read/Write
Default value: 00h

BIT NUMBER	7	6	5	4	3	2	1	0
RESET STATE	0	0	0	0	0	0	0	0

4.10 Header Type Register

The header type register returns 82h when read, indicating that the function 0 configuration spaces adhere to the CardBus bridge PCI header. The CardBus bridge PCI header ranges from PCI registers 00h−7Fh, and 80h−FFh is user-definable extension registers.

PCI register offset: 0Eh (Function 0)
Register type: Read-only
Default value: 82h

BIT NUMBER	7	6	5	4	3	2	1	0
RESET STATE	1	0	0	0	0	0	1	0

4.11 BIST Register

Because the controller does not support a built-in self-test (BIST), this register returns the value of 00h when read.

PCI register offset: 0Fh (Function 0)
Register type: Read-only
Default value: 00h

BIT NUMBER	7	6	5	4	3	2	1	0
RESET STATE	0	0	0	0	0	0	0	0

4.12 CardBus Socket Registers/ExCA Base Address Register

This register is programmed with a base address referencing the CardBus socket registers and the memory-mapped ExCA register set. Bits 31−12 are read/write, and allow the base address to be located anywhere in the 32-bit PCI memory address space on a 4-Kbyte boundary. Bits 11−0 are read-only, returning 000h when read. When software writes FFFF FFFFh to this register, the value read back is FFFF F000h, indicating that at least 4K bytes of memory address space are required. The CardBus registers start at offset 000h, and the memory-mapped ExCA registers begin at offset 800h.

PCI register offset: 10h
Register type: Read-only, Read/Write
Default value: 0000 0000h

BIT NUMBER	31	30	29	28	27	26	25	24	23	22	21	20	19	18	17	16
RESET STATE	0	0	0	0	0	0	0	0	0	0	0	0	0	0	0	0
BIT NUMBER	15	14	13	12	11	10	9	8	7	6	5	4	3	2	1	0
RESET STATE	0	0	0	0	0	0	0	0	0	0	0	0	0	0	0	0

4.13 Capability Pointer Register

The capability pointer register provides a pointer into the PCI configuration header where the PCI power management register block resides. PCI header doublewords at A0h and A4h provide the power management (PM) registers. This register is read-only and returns A0h when read.

PCI register offset: 14h
Register type: Read-only
Default value: A0h

BIT NUMBER	7	6	5	4	3	2	1	0
RESET STATE	1	0	1	0	0	0	0	0

4.14 Secondary Status Register

The secondary status register is compatible with the PCI-PCI bridge secondary status register. It indicates CardBus-related device information to the host system. This register is very similar to the PCI status register (PCI offset 06h, see Section 4.5), and status bits are cleared by a writing a 1b. See Table 4−5 for a complete description of the register contents.

PCI register offset: 16h
Register type: Read-only, Read/Clear
Default value: 0200h

BIT NUMBER	15	14	13	12	11	10	9	8	7	6	5	4	3	2	1	0
RESET STATE	0	0	0	0	0	0	1	0	0	0	0	0	0	0	0	0

Table 4−5. Secondary Status Register Description

BIT	SIGNAL	TYPE	FUNCTION
15 ‡	CBPARITY	RC	Detected parity error. This bit is set when a CardBus parity error is detected, either an address or data parity error. Write a 1b to clear this bit.
14 ‡	CBSERR	RC	Signaled system error. This bit is set when $\overline{\text{CSERR}}$ is signaled by a CardBus card. The controller does not assert the $\overline{\text{CSERR}}$ signal. Write a 1b to clear this bit.
13 ‡	CBMABORT	RC	Received master abort. This bit is set when a cycle initiated by the controller on the CardBus bus is terminated by a master abort. Write a 1b to clear this bit.
12 ‡	REC_CBTA	RC	Received target abort. This bit is set when a cycle initiated by the controller on the CardBus bus is terminated by a target abort. Write a 1b to clear this bit.
11 ‡	SIG_CBTA	RC	Signaled target abort. This bit is set by the controller when it terminates a transaction on the CardBus bus with a target abort. Write a 1b to clear this bit.
10−9	CB_SPEED	R	CDEVSEL timing. These bits encode the timing of $\overline{\text{CDEVSEL}}$ and are hardwired to 01b indicating that the controller asserts this signal at a medium speed.
8 ‡	CB_DPAR	RC	CardBus data parity error detected. Write a 1b to clear this bit. 0 = The conditions for setting this bit have not been met 1 = A data parity error occurred and the following conditions were met: a. $\overline{\text{CPERR}}$ was asserted on the CardBus interface b. The controller was the bus master during the data parity error c. Bit 0 (CPERREN) in the bridge control register (PCI offset 3Eh, see Section 4.25) is set
7	CBFBB_CAP	R	Fast back-to-back capable. The controller cannot accept fast back-to-back transactions; therefore, this bit is hardwired to 0b.
6	CB_UDF	R	User-definable feature support. The controller does not support user-definable features; therefore, this bit is hardwired to 0b.
5	CB66MHZ	R	66-MHz capable. The PCIxx12 CardBus interface operates at a maximum CCLK frequency of 33 MHz; therefore, this bit is hardwired to 0b.
4−0	RSVD	R	These bits return 00000b when read.

‡ This bit is cleared only by the assertion of $\overline{\text{GRST}}$.

4.15 PCI Bus Number Register

The PCI bus number register is programmed by the host system to indicate the bus number of the PCI bus to which the controller is connected. The controller uses this register in conjunction with the CardBus bus number and subordinate bus number registers to determine when to forward PCI configuration cycles to its secondary buses.

PCI register offset: 18h (Function 0)
Register type: Read/Write
Default value: 00h

BIT NUMBER	7	6	5	4	3	2	1	0
RESET STATE	0	0	0	0	0	0	0	0

4.16 CardBus Bus Number Register

The CardBus bus number register is programmed by the host system to indicate the bus number of the CardBus bus to which the controller is connected. The controller uses this register in conjunction with the PCI bus number and subordinate bus number registers to determine when to forward PCI configuration cycles to its secondary buses. This register is separate for each controller function.

PCI register offset: 19h
Register type: Read/Write
Default value: 00h

BIT NUMBER	7	6	5	4	3	2	1	0
RESET STATE	0	0	0	0	0	0	0	0

4.17 Subordinate Bus Number Register

The subordinate bus number register is programmed by the host system to indicate the highest numbered bus below the CardBus bus. The controller uses this register in conjunction with the PCI bus number and CardBus bus number registers to determine when to forward PCI configuration cycles to its secondary buses.

PCI register offset: 1Ah
Register type: Read/Write
Default value: 00h

BIT NUMBER	7	6	5	4	3	2	1	0
RESET STATE	0	0	0	0	0	0	0	0

4.18 CardBus Latency Timer Register

The CardBus latency timer register is programmed by the host system to specify the latency timer for the CardBus interface, in units of CCLK cycles. When the controller is a CardBus initiator and asserts $\overline{\text{CFRAME}}$, the CardBus latency timer begins counting. If the latency timer expires before the PCIxx12 transaction has terminated, then the controller terminates the transaction at the end of the next data phase. A recommended minimum value for this register of 20h allows most transactions to be completed.

PCI register offset: 1Bh (Function 0)
Register type: Read/Write
Default value: 00h

BIT NUMBER	7	6	5	4	3	2	1	0
RESET STATE	0	0	0	0	0	0	0	0

4.19 CardBus Memory Base Registers 0, 1

These registers indicate the lower address of a PCI memory address range. They are used by the controller to determine when to forward a memory transaction to the CardBus bus, and likewise, when to forward a CardBus cycle to PCI. Bits 31−12 of these registers are read/write and allow the memory base to be located anywhere in the 32-bit PCI memory space on 4-Kbyte boundaries. Bits 11−0 are read-only and always return 000h. Writes to these bits have no effect. Bits 8 and 9 of the bridge control register (PCI offset 3Eh, see Section 4.25) specify whether memory windows 0 and 1 are prefetchable or nonprefetchable. The memory base register or the memory limit register must be nonzero in order for the controller to claim any memory transactions through CardBus memory windows (i.e., these windows by default are not enabled to pass the first 4 Kbytes of memory to CardBus).

PCI register offset: 1Ch, 24h
Register type: Read-only, Read/Write
Default value: 0000 0000h

BIT NUMBER	31	30	29	28	27	26	25	24	23	22	21	20	19	18	17	16
RESET STATE	0	0	0	0	0	0	0	0	0	0	0	0	0	0	0	0
BIT NUMBER	**15**	**14**	**13**	**12**	**11**	**10**	**9**	**8**	**7**	**6**	**5**	**4**	**3**	**2**	**1**	**0**
RESET STATE	0	0	0	0	0	0	0	0	0	0	0	0	0	0	0	0

4.20 CardBus Memory Limit Registers 0, 1

These registers indicate the upper address of a PCI memory address range. They are used by the controller to determine when to forward a memory transaction to the CardBus bus, and likewise, when to forward a CardBus cycle to PCI. Bits 31−12 of these registers are read/write and allow the memory base to be located anywhere in the 32-bit PCI memory space on 4-Kbyte boundaries. Bits 11−0 are read-only and always return 000h. Writes to these bits have no effect. Bits 8 and 9 of the bridge control register (PCI offset 3Eh, see Section 4.25) specify whether memory windows 0 and 1 are prefetchable or nonprefetchable. The memory base register or the memory limit register must be nonzero in order for the controller to claim any memory transactions through CardBus memory windows (i.e., these windows by default are not enabled to pass the first 4 Kbytes of memory to CardBus).

PCI register offset: 20h, 28h
Register type: Read-only, Read/Write
Default value: 0000 0000h

BIT NUMBER	31	30	29	28	27	26	25	24	23	22	21	20	19	18	17	16
RESET STATE	0	0	0	0	0	0	0	0	0	0	0	0	0	0	0	0
BIT NUMBER	**15**	**14**	**13**	**12**	**11**	**10**	**9**	**8**	**7**	**6**	**5**	**4**	**3**	**2**	**1**	**0**
RESET STATE	0	0	0	0	0	0	0	0	0	0	0	0	0	0	0	0

4.21 CardBus I/O Base Registers 0, 1

These registers indicate the lower address of a PCI I/O address range. They are used by the controller to determine when to forward an I/O transaction to the CardBus bus, and likewise, when to forward a CardBus cycle to the PCI bus. The lower 16 bits of this register locate the bottom of the I/O window within a 64-Kbyte page. The upper 16 bits (31−16) are all 0000h, which locates this 64-Kbyte page in the first page of the 32-bit PCI I/O address space. Bits 31−2 are read/write and always return 0s forcing I/O windows to be aligned on a natural doubleword boundary in the first 64-Kbyte page of PCI I/O address space. Bits 1−0 are read-only, returning 00b or 01b when read, depending on the value of bit 11 (IO_BASE_SEL) in the general control register (PCI offset 86h, see Section 4.30). These I/O windows are enabled when either the I/O base register or the I/O limit register is nonzero. The I/O windows by default are not enabled to pass the first doubleword of I/O to CardBus.

Either the I/O base register or the I/O limit register must be nonzero to enable any I/O transactions.

PCI register offset: 2Ch, 34h
Register type: Read-only, Read/Write
Default value: 0000 000Xh

BIT NUMBER	31	30	29	28	27	26	25	24	23	22	21	20	19	18	17	16
RESET STATE	0	0	0	0	0	0	0	0	0	0	0	0	0	0	0	0
BIT NUMBER	**15**	**14**	**13**	**12**	**11**	**10**	**9**	**8**	**7**	**6**	**5**	**4**	**3**	**2**	**1**	**0**
RESET STATE	0	0	0	0	0	0	0	0	0	0	0	0	0	0	0	X

4.22 CardBus I/O Limit Registers 0, 1

These registers indicate the upper address of a PCI I/O address range. They are used by the controller to determine when to forward an I/O transaction to the CardBus bus, and likewise, when to forward a CardBus cycle to PCI. The lower 16 bits of this register locate the top of the I/O window within a 64-Kbyte page, and the upper 16 bits are a page register which locates this 64-Kbyte page in 32-bit PCI I/O address space. Bits 15−2 are read/write and allow the I/O limit address to be located anywhere in the 64-Kbyte page (indicated by bits 31−16 of the appropriate I/O base register) on doubleword boundaries.

Bits 31−16 are read-only and always return 0000h when read. The page is set in the I/O base register. Bits 15−2 are read/write and bits 1−0 are read-only, returning 00b or 01b when read, depending on the value of bit 12 (IO_LIMIT_SEL) in the general control register (PCI offset 86h, see Section 4.30). Writes to read-only bits have no effect.

These I/O windows are enabled when either the I/O base register or the I/O limit register is nonzero. By default, the I/O windows are not enabled to pass the first doubleword of I/O to CardBus.

Either the I/O base register or the I/O limit register must be nonzero to enable any I/O transactions.

PCI register offset: 30h, 38h
Register type: Read-only, Read/Write
Default value: 0000 000Xh

BIT NUMBER	31	30	29	28	27	26	25	24	23	22	21	20	19	18	17	16
RESET STATE	0	0	0	0	0	0	0	0	0	0	0	0	0	0	0	0
BIT NUMBER	**15**	**14**	**13**	**12**	**11**	**10**	**9**	**8**	**7**	**6**	**5**	**4**	**3**	**2**	**1**	**0**
RESET STATE	0	0	0	0	0	0	0	0	0	0	0	0	0	0	0	X

4.23 Interrupt Line Register

The interrupt line register is a read/write register used by the host software. As part of the interrupt routing procedure, the host software writes this register with the value of the system IRQ assigned to the function.

PCI register offset: 3Ch
Register type: Read/Write
Default value: FFh

BIT NUMBER	7	6	5	4	3	2	1	0
RESET STATE	1	1	1	1	1	1	1	1

4.24 Interrupt Pin Register

The value read from this register is function dependent. The default value for function 0 is 01h ($\overline{\text{INTA}}$), the default value for function 1 is 02h ($\overline{\text{INTB}}$), the default value for function 2 is 01h ($\overline{\text{INTA}}$), the default value for function 3 is 01h ($\overline{\text{INTA}}$), the default value for function 4 is 01h ($\overline{\text{INTA}}$). The value also depends on the values of bits 28, the tie-all bit (TIEALL), and 29, the interrupt tie bit (INTRTIE), in the system control register (PCI offset 80h, see Section 4.29). The INTRTIE bit is compatible with previous TI CardBus controllers, and when set to 1b, ties $\overline{\text{INTB}}$ to $\overline{\text{INTA}}$ internally. The TIEALL bit ties $\overline{\text{INTA}}$, $\overline{\text{INTB}}$, $\overline{\text{INTC}}$, and $\overline{\text{INTD}}$ together internally. The internal interrupt connections set by INTRTIE and TIEALL are communicated to host software through this standard register interface. This read-only register is described for all PCIxx12 functions in Table 4−6.

PCI register offset: 3Dh
Register type: Read-only
Default value: 01h (function 0), 02h (function 1), 01h (function 2), 01h (function 3), 01h (function 4)

PCI function 0

BIT NUMBER	7	6	5	4	3	2	1	0
RESET STATE	0	0	0	0	0	0	0	1

PCI function 1

BIT NUMBER	7	6	5	4	3	2	1	0
RESET STATE	0	0	0	0	0	0	1	1

PCI function 2

BIT NUMBER	7	6	5	4	3	2	1	0
RESET STATE	0	0	0	0	0	X	X	X

PCI function 3

BIT NUMBER	7	6	5	4	3	2	1	0
RESET STATE	0	0	0	0	0	X	X	X

PCI function 4

BIT NUMBER	7	6	5	4	3	2	1	0
RESET STATE	0	0	0	0	0	X	X	X

Table 4−6. Interrupt Pin Register Cross Reference

INTRTIE BIT (BIT 29, OFFSET 80H)	TIEALL BIT (BIT 28, OFFSET 80H)	INTPIN FUNCTION 0 (CARDBUS)	INTPIN FUNCTION 1 (1394 OHCI)	INTPIN FUNCTION 2 (FLASH MEDIA)	INTPIN FUNCTION 3 (SD HOST)	INTPIN FUNCTION 4 (SMART CARD)
0	0	01h ($\overline{\text{INTA}}$)	02h ($\overline{\text{INTB}}$)	Determined by bits 6−5 (INT_SEL) in the flash media general control register (see Section 11.21)	Determined by bits 6−5 (INT_SEL) in the SD host general control register (see Section 12.22)	Determined by bits 6−5 (INT_SEL) in the Smart Card general control register (see Section 13.22)
1	0	01h ($\overline{\text{INTA}}$)	01h ($\overline{\text{INTA}}$)			
X	1	01h ($\overline{\text{INTA}}$)	01h ($\overline{\text{INTA}}$)	01h ($\overline{\text{INTA}}$)	01h ($\overline{\text{INTA}}$)	01h ($\overline{\text{INTA}}$)

4.25 Bridge Control Register

The bridge control register provides control over various PCIxx12 bridging functions. Some bits in this register are global in nature and must be accessed only through function 0. See Table 4−7 for a complete description of the register contents.

PCI register offset: 3Eh (Function 0)
Register type: Read-only, Read/Write
Default value: 0340h

BIT NUMBER	15	14	13	12	11	10	9	8	7	6	5	4	3	2	1	0
RESET STATE	0	0	0	0	0	0	1	1	0	1	0	0	0	0	0	0

Table 4−7. Bridge Control Register Description

BIT	SIGNAL	TYPE	FUNCTION
15−11	RSVD	R	These bits return 00000b when read.
10	POSTEN	RW	Write posting enable. Enables write posting to and from the CardBus socket. Write posting enables the posting of write data on burst cycles. Operating with write posting disabled impairs performance on burst cycles. Note that burst write data can be posted, but various write transactions may not.
9	PREFETCH1	RW	Memory window 1 type. This bit specifies whether or not memory window 1 is prefetchable. This bit is encoded as: 0 = Memory window 1 is nonprefetchable 1 = Memory window 1 is prefetchable (default)
8	PREFETCH0	RW	Memory window 0 type. This bit specifies whether or not memory window 0 is prefetchable. This bit is encoded as: 0 = Memory window 0 is nonprefetchable 1 = Memory window 0 is prefetchable (default)
7	INTR	RW	PCI interrupt − IREQ routing enable. This bit selects whether PC Card functional interrupts are routed to PCI interrupts or to the IRQ specified in the ExCA registers. 0 = Functional interrupts are routed to PCI interrupts (default). 1 = Functional interrupts are routed by ExCA registers.
6 †	CRST	RW	CardBus reset. When this bit is set, the $\overline{\text{CRST}}$ signal is asserted on the CardBus interface. The $\overline{\text{CRST}}$ signal can also be asserted by passing a $\overline{\text{PRST}}$ assertion to CardBus. 0 = $\overline{\text{CRST}}$ is deasserted 1 = $\overline{\text{CRST}}$ is asserted (default) This bit is not cleared by the assertion of $\overline{\text{PRST}}$. It is only cleared by the assertion of $\overline{\text{GRST}}$.
5	MABTMODE	RW	Master abort mode. This bit controls how the controller responds to a master abort when the controller is an initiator on the CardBus interface. 0 = Master aborts not reported (default) 1 = Signal target abort on PCI and signal $\overline{\text{SERR}}$, if enabled
4	RSVD	R	This bit returns 0b when read.
3	VGAEN	RW	VGA enable. This bit affects how the controller responds to VGA addresses. When this bit is set, accesses to VGA addresses are forwarded.
2	ISAEN	RW	ISA mode enable. This bit affects how the controller passes I/O cycles within the 64-Kbyte ISA range. When this bit is set, the controller does not forward the last 768 bytes of each 1K I/O range to CardBus.
1	CSERREN	RW	$\overline{\text{CSERR}}$ enable. This bit controls the response of the controller to $\overline{\text{CSERR}}$ signals on the CardBus bus. 0 = $\overline{\text{CSERR}}$ is not forwarded to PCI $\overline{\text{SERR}}$ (default) 1 = $\overline{\text{CSERR}}$ is forwarded to PCI $\overline{\text{SERR}}$
0	CPERREN	RW	CardBus parity error response enable. This bit controls the response of the controller to CardBus parity errors. 0 = CardBus parity errors are ignored (default) 1 = CardBus parity errors are reported using $\overline{\text{CPERR}}$

† One or more bits in this register are PME context bits and can be cleared only by the assertion of $\overline{\text{GRST}}$ when $\overline{\text{PME}}$ is enabled. If $\overline{\text{PME}}$ is not enabled, then this bit is cleared by the assertion of $\overline{\text{PRST}}$ or $\overline{\text{GRST}}$.

4.26 Subsystem Vendor ID Register

The subsystem vendor ID register, used for system and option card identification purposes, may be required for certain operating systems. This register is read-only or read/write, depending on the setting of bit 5 (SUBSYSRW) in the system control register (PCI offset 80h, See Section 4.29). When bit 5 is 0b, this register is read/write; when bit 5 is 1b, this register is read-only. The default mode is read-only. All bits in this register are reset by $\overline{\text{GRST}}$ only.

PCI register offset: 40h (Function 0)
Register type: Read-only, (Read/Write when bit 5 in the system control register is 0)
Default value: 0000h

BIT NUMBER	15	14	13	12	11	10	9	8	7	6	5	4	3	2	1	0
RESET STATE	0	0	0	0	0	0	0	0	0	0	0	0	0	0	0	0

4.27 Subsystem ID Register

The subsystem ID register, used for system and option card identification purposes, may be required for certain operating systems. This register is read-only or read/write, depending on the setting of bit 5 (SUBSYSRW) in the system control register (PCI offset 80h, see Section 4.29). When bit 5 is 0b, this register is read/write; when bit 5 is 1b, this register is read-only. The default mode is read-only. All bits in this register are reset by $\overline{\text{GRST}}$ only.

If an EEPROM is present, then the subsystem ID and subsystem vendor ID is loaded from the EEPROM after a reset.

PCI register offset: 42h (Function 0)
Register type: Read-only, (Read/Write when bit 5 in the system control register is 0)
Default value: 0000h

BIT NUMBER	15	14	13	12	11	10	9	8	7	6	5	4	3	2	1	0
RESET STATE	0	0	0	0	0	0	0	0	0	0	0	0	0	0	0	0

4.28 PC Card 16-Bit I/F Legacy-Mode Base-Address Register

The controller supports the index/data scheme of accessing the ExCA registers, which is mapped by this register. An address written to this register is the address for the index register and the address+1 is the data address. Using this access method, applications requiring index/data ExCA access can be supported. The base address can be mapped anywhere in 32-bit I/O space on a word boundary; hence, bit 0 is read-only, returning 1b when read. As specified in the *PCI to PCMCIA CardBus Bridge Register Description* specification. See the ExCA register set description in Section 5 for register offsets. All bits in this register are reset by $\overline{\text{GRST}}$ only.

PCI register offset: 44h (Function 0)
Register type: Read-only, Read/Write
Default value: 0000 0001h

BIT NUMBER	31	30	29	28	27	26	25	24	23	22	21	20	19	18	17	16
RESET STATE	0	0	0	0	0	0	0	0	0	0	0	0	0	0	0	0
BIT NUMBER	15	14	13	12	11	10	9	8	7	6	5	4	3	2	1	0
RESET STATE	0	0	0	0	0	0	0	0	0	0	0	0	0	0	0	1

4.29 System Control Register

System-level initializations are performed through programming this doubleword register. Some of the bits are global in nature and must be accessed only through function 0. See Table 4−8 for a complete description of the register contents.

PCI register offset: 80h (Function 0)
Register type: Read-only, Read/Write
Default value: 0844 9060h

BIT NUMBER	31	30	29	28	27	26	25	24	23	22	21	20	19	18	17	16
RESET STATE	0	0	0	0	1	0	0	0	0	1	0	0	0	1	0	0
BIT NUMBER	**15**	**14**	**13**	**12**	**11**	**10**	**9**	**8**	**7**	**6**	**5**	**4**	**3**	**2**	**1**	**0**
RESET STATE	1	0	0	1	0	0	0	0	0	1	1	0	0	0	0	0

Table 4−8. System Control Register Description

BIT	SIGNAL	TYPE	FUNCTION
31−30 ‡§	SER_STEP	RW	Serial input stepping. In serial PCI interrupt mode, these bits are used to configure the serial stream PCI interrupt frames, and can be used to accomplish an even distribution of interrupts signaled on the four PCI interrupt slots. 00 = $\overline{\text{INTA}}$/$\overline{\text{INTB}}$/$\overline{\text{INTC}}$/$\overline{\text{INTD}}$ signal in $\overline{\text{INTA}}$/$\overline{\text{INTB}}$/$\overline{\text{INTC}}$/$\overline{\text{INTD}}$ slots (default) 01 = $\overline{\text{INTA}}$/$\overline{\text{INTB}}$/$\overline{\text{INTC}}$/$\overline{\text{INTD}}$ signal in $\overline{\text{INTB}}$/$\overline{\text{INTC}}$/$\overline{\text{INTD}}$/$\overline{\text{INTA}}$ slots 10 = $\overline{\text{INTA}}$/$\overline{\text{INTB}}$/$\overline{\text{INTC}}$/$\overline{\text{INTD}}$ signal in $\overline{\text{INTC}}$/$\overline{\text{INTD}}$/$\overline{\text{INTA}}$/$\overline{\text{INTB}}$ slots 11 = $\overline{\text{INTA}}$/$\overline{\text{INTB}}$/$\overline{\text{INTC}}$/$\overline{\text{INTD}}$ signal in $\overline{\text{INTD}}$/$\overline{\text{INTA}}$/$\overline{\text{INTB}}$/$\overline{\text{INTC}}$ slots
29 ‡§	INTRTIE	RW	This bit ties $\overline{\text{INTA}}$ to $\overline{\text{INTB}}$ internally (to $\overline{\text{INTA}}$), and reports this through the interrupt pin register (PCI offset 3Dh, see Section 4.24). This bit has no effect on $\overline{\text{INTC}}$ or $\overline{\text{INTD}}$.
28 ‡	TIEALL	RW	This bit ties $\overline{\text{INTA}}$, $\overline{\text{INTB}}$, $\overline{\text{INTC}}$, and $\overline{\text{INTD}}$ internally (to $\overline{\text{INTA}}$), and reports this through the interrupt pin register (PCI offset 3Dh, see Section 4.24).
27 ‡	PSCCLK	RW	P2C power switch clock. The PCIxx12 CLOCK signal clocks the serial interface power switch and the internal state machine. The default state for this bit is 0b, requiring an external clock source provided to the CLOCK terminal. Bit 27 can be set to 1b, allowing the internal oscillator to provide the clock signal. 0 = CLOCK is provided externally, input to the controller 1 = CLOCK is generated by the internal oscillator and driven by the controller (default)
26 ‡§	SMIROUTE	RW	SMI interrupt routing. This bit selects whether IRQ2 or CSC is signaled when a write occurs to power a PC Card socket. 0 = PC Card power change interrupts are routed to IRQ2 (default) 1 = A CSC interrupt is generated on PC Card power changes
25 ‡	SMISTATUS	RW	SMI interrupt status. This bit is set when a write occurs to set the socket power, and the SMIENB bit is set. Writing a 1b to this bit clears the status. 0 = SMI interrupt is signaled 1 = SMI interrupt is not signaled
24 ‡§	SMIENB	RW	SMI interrupt mode enable. When this bit is set, the SMI interrupt signaling generates an interrupt when a write to the socket power control occurs. This bit defaults to 0b (disabled). 0 = SMI interrupt mode is disabled (default) 1 = SMI interrupt mode is enabled
23	RSVD	R	Reserved
22 ‡	CBRSVD	RW	CardBus reserved terminals signaling. When this bit is set, the RSVD CardBus terminals are driven low when a CardBus card has been inserted. When this bit is low, these signals are placed in a high-impedance state. 0 = Place the CardBus RSVD terminals in a high-impedance state 1 = Drive the CardBus RSVD terminals low (default)
21 ‡	VCCPROT	RW	V_{CC} protection enable. 0 = V_{CC} protection is enabled for 16-bit cards (default) 1 = V_{CC} protection is disabled for 16-bit cards

‡ These bits are cleared only by the assertion of $\overline{\text{GRST}}$.
§ These bits are global in nature and must be accessed only through function 0.

Table 4−8. System Control Register Description (Continued)

BIT	SIGNAL	TYPE	FUNCTION
20−16 ‡	RSVD	RW	These bits are reserved. Do not change the value of these bits.
15 ‡§	MRBURSTDN	RW	Memory read burst enable downstream. When this bit is set, the controller allows memory read transactions to burst downstream. 0 = MRBURSTDN downstream is disabled 1 = MRBURSTDN downstream is enabled (default)
14 ‡§	MRBURSTUP	RW	Memory read burst enable upstream. When this bit is set, the controller allows memory read transactions to burst upstream. 0 = MRBURSTUP upstream is disabled (default) 1 = MRBURSTUP upstream is enabled
13 ‡	SOCACTIVE	R	Socket activity status. When set, this bit indicates access has been performed to or from a PC Card. Reading this bit causes it to be cleared. 0 = No socket activity (default) 1 = Socket activity
12	RSVD	R	Reserved. This bit returns 1b when read.
11 ‡	PWRSTREAM	R	Power-stream-in-progress status bit. When set, this bit indicates that a power stream to the power switch is in progress and a powering change has been requested. When this bit is cleared, it indicates that the power stream is complete. 0 = Power stream is complete, delay has expired (default) 1 = Power stream is in progress
10 †	DELAYUP	R	Power-up delay-in-progress status bit. When set, this bit indicates that a power-up stream has been sent to the power switch, and proper power may not yet be stable. This bit is cleared when the power-up delay has expired. 0 = Power-up delay has expired (default) 1 = Power-up stream sent to switch. Power might not be stable.
9 †	DELAYDOWN	R	Power-down delay-in-progress status bit. When set, this bit indicates that a power-down stream has been sent to the power switch, and proper power may not yet be stable. This bit is cleared when the power-down delay has expired. 0 = Power-down delay has expired (default) 1 = Power-down stream sent to switch. Power might not be stable.
8 †	INTERROGATE	R	Interrogation in progress. When set, this bit indicates an interrogation is in progress, and clears when the interrogation completes. 0 = Interrogation not in progress (default) 1 = Interrogation in progress
7	RSVD	R	Reserved. This bit returns 0b when read.
6 ‡§	PWRSAVINGS	RW	Power savings mode enable. When this bit is set, the controller consumes less power with no performance loss. 0 = Power savings mode disabled 1 = Power savings mode enabled (default)
5 ‡§	SUBSYSRW	RW	Subsystem ID and subsystem vendor ID, ExCA ID and revision register read/write enable. This bit also controls read/write for the function 2 subsystem ID register. 0 = Registers are read/write 1 = Registers are read-only (default)
4 ‡§	CB_DPAR	RW	CardBus data parity SERR signaling enable. 0 = CardBus data parity not signaled on PCI $\overline{\text{SERR}}$ signal (default) 1 = CardBus data parity signaled on PCI $\overline{\text{SERR}}$ signal
3 ‡§	RSVD	R	Reserved. This bit returns 0b when read.
2 ‡	EXCAPOWER	R	ExCA power control bit. 0 = Enables 3.3 V (default) 1 = Enables 5 V

† One or more bits in this register are PME context bits and can be cleared only by the assertion of $\overline{\text{GRST}}$ when $\overline{\text{PME}}$ is enabled. If $\overline{\text{PME}}$ is not enabled, then this bit is cleared by the assertion of $\overline{\text{PRST}}$ or $\overline{\text{GRST}}$.
‡ These bits are cleared only by the assertion of $\overline{\text{GRST}}$.
§ These bits are global in nature and must be accessed only through function 0.

Table 4−8. System Control Register Description (Continued)

BIT	SIGNAL	TYPE	FUNCTION
1 ‡§	KEEPCLK	RW	Keep clock. When this bit is set, the controller follows the $\overline{\text{CLKRUN}}$ protocol to maintain the system PCLK and the CCLK (CardBus clock). This bit is global to the PCIxx12 functions. 0 = Allow system PCLK and CCLK clocks to stop (default) 1 = Never allow system PCLK or CCLK clock to stop Note that the functionality of this bit has changed relative to that of the PCI12XX family of TI CardBus controllers. In these CardBus controllers, setting this bit only maintains the PCI clock, not the CCLK. In the PCIxx12 controller, setting this bit maintains both the PCI clock and the CCLK.
0 ‡§	RIMUX	RW	$\overline{\text{PME}}$/$\overline{\text{RI_OUT}}$ select bit. When this bit is 1b, the PME signal is routed to the $\overline{\text{PME}}$/$\overline{\text{RI_OUT}}$ terminal (R03). When this bit is 0b and bit 7 (RIENB) of the card control register is 1b, the $\overline{\text{RI_OUT}}$ signal is routed to the $\overline{\text{PME}}$/$\overline{\text{RI_OUT}}$ terminal. If this bit is 0b and bit 7 (RIENB) of the card control register is 0b, then the output is placed in a high-impedance state. This terminal is encoded as: 0 = $\overline{\text{RI_OUT}}$ signal is routed to the $\overline{\text{PME}}$/$\overline{\text{RI_OUT}}$ terminal if bit 7 of the card control register is 1b (default) 1 = $\overline{\text{PME}}$ signal is routed to the $\overline{\text{PME}}$/$\overline{\text{RI_OUT}}$ terminal of the controller NOTE: If this bit (bit 0) is 0b and bit 7 of the card control register (PCI offset 91h, see Section 4.37) is 0b, then the output on the $\overline{\text{PME}}$/$\overline{\text{RI_OUT}}$ terminal is placed in a high-impedance state.

‡ This bit is cleared only by the assertion of $\overline{\text{GRST}}$.
§ These bits are global in nature and must be accessed only through function 0.

4.30 General Control Register

The general control register provides top level PCI arbitration control. It also provides the ability to disable the features of the device and provides control over miscellaneous new functionality. See Table 4−9 for a complete description of the register contents.

PCI register offset: 84h
Register type: Read/Write, Read-only
Default value: 0003 0019h

BIT NUMBER	31	30	29	28	27	26	25	24	23	22	21	20	19	18	17	16
RESET STATE	0	0	0	0	0	0	0	0	0	0	0	0	0	0	1	1
BIT NUMBER	**15**	**14**	**13**	**12**	**11**	**10**	**9**	**8**	**7**	**6**	**5**	**4**	**3**	**2**	**1**	**0**
RESET STATE	0	0	0	0	0	0	0	0	0	0	0	1	1	0	0	1

Table 4−9. General Control Register Description

BIT	SIGNAL	TYPE	FUNCTION
31 ‡	FM_PWR_CTRL _POL	RW	Flash media power control pin polarity. This bit controls the polarity of the MC_PWR_CTRL_0 and MC_PWR_CTRL_1 terminals. 0 = MC_PWR_CTRL_x terminals are active low (default) 1 = MC_PWR_CTRL_x terminals are active high
30 ‡	SC_IF_SEL	RWU	Smart Card interface select. This bit controls the selection of the dedicated Smart Card interface used by the controller. 0 = EMV interface selected (default) 1 = PCI7x10-style interface selected Note: The PCI7x10-style interface is only allowed when bits 25−24 (FM_IF_SEL field) are 01b. If bits 25−24 contain any other value, then this bit is 0b. Care must be taken in the design to ensure that this bit can be set to 1b at the same time that bits 25−24 are set to 01b. Note: If bit 9 (SC_SOCKET_SEL) is set to 1b, then this bit has no effect on the design.
29 ‡	SIM_MODE	RW	When this bit is set, it reduces the query time for UltraMedia card types. 0 = Query time is unaffected (default) 1 = Query time is reduced for simulation purposes
28 ‡	IO_LIMIT_SEL	RW	When this bit is set, bit 0 in the I/O limit registers (PCI offsets 30h and 38h) is set. 0 = Bit 0 in the I/O limit registers is 0b (default) 1 = Bit 0 in the I/O limit registers is 1b

‡ These bits are cleared only by the assertion of $\overline{\text{GRST}}$.

Table 4−9. General Control Register Description (Continued)

BIT	SIGNAL	TYPE	FUNCTION
27 ‡	IO_BASE_SEL	RW	When this bit is set, bit 0 in the I/O base registers (PCI offsets 2Ch and 34h) is set. 0 = Bit 0 in the I/O base registers is 0b (default) 1 = Bit 0 in the I/O base registers is 1b
26 ‡	12V_SW_SEL	RW	Power switch select. This bit selects which power switch is implemented in the system. 0 = A 1.8-V capable power switch (TPS2228) is used (default) 1 = A 12-V capable power switch (TPS2226) is used
25−24 ‡	FM_IF_SEL	RW	Dedicated flash media interface selection. This field controls the mode of the dedicated flash media interface. 00 = Flash media interface configured as SD/MMC socket + MS socket (default) 01 = Flash media interface configured as 2-in-1 (SD/MMC, MS) socket 10 = Flash media interface configured as 3-in-1 (SD/MMC, MS, SM/xD) socket 11 = Reserved
23 ‡	DISABLE_SC	RW	When this bit is set, the Smart Card function is completely nonaccessible and nonfunctional.
22 ‡	DISABLE_SD	RW	When this bit is set, the SD host controller function is completely nonaccessible and nonfunctional.
21 ‡	DISABLE_FM	RW	When this bit is set, the flash media function is completely nonaccessible and nonfunctional.
20 ‡	RSVD	RW	Reserved. This bit does not affect any functionality within the CardBus core.
19 ‡	DISABLE_OHCI	RW	When this bit is set, the OHCI 1394 controller function is completely nonaccessible and nonfunctional.
18 ‡	DED_SC_PWR_ CTRL	RW	Dedicated Smart Card power control. This bit determines how power to the dedicated Smart Card socket is controlled. 0 = Controlled through the SC_PWR_CTRL terminal (default) 1 = Controlled through the VPP voltage of socket B of the CardBus power switch
17−16 ‡	ARB_CTRL	RW	Controls top level PCI arbitration: 00 = 1394 OHCI priority 10 = Flash media/SD host priority 01 = CardBus priority 11 = Fair round robin Note: When Flash media/SD host priority is selected, there must be a two-level priority scheme with the first level being a round robin between the Flash media/SD host functions and the second level being a round robin between the CardBus and 1394 functions.
15−11	RSVD	R	Reserved. These bits return 00000b when read.
10 ‡	DISABLE_CB _CD	RW	Disable CardBus card detection. When this bit is set, the CardBus core does not detect any CardBus or 16-bit card insertions. Instead, the registers in the CardBus core contain the values they would contain if the socket was empty. This bit does not affect the detection of Flash media or Smart Card adapters.
9 ‡	SC_SOCKET _SEL	RW	Smart Card socket select. This bit selects whether the Smart Card logic is connected to the dedicated Smard Card interface or the CardBus socket. 0 = Smart Card logic connected to the dedicated Smart Card interface (default) 1 = Smart Card logic connected to the CardBus socket for use with a Smart Card adapter
8 ‡	DED_FM_PWR_ CTL	RW	Dedicated Flash media socket 0 power control. This bit determines how power to the dedicated Flash media socket 0 is controlled. 0 = Controlled through the MC_PWR_CTRL_0 signal (default) 1 = Controlled through the VCC voltage of socket B of the CardBus power switch (the design ensures that this mode can only be set when the 3-pin serial power switch interface is selected)
7−0 ‡	MC_CD_ DEBOUNCE	RW	$\overline{\text{MC_CD}}$ debounce. This field provides debounce time in units of 2 ms for the $\overline{\text{MC_CD}}$ signal on the UltraMedia cards. This register defaults to 19h which gives a default debounce time of 50 ms.

‡ These bits are cleared only by the assertion of $\overline{\text{GRST}}$.

4.31 General-Purpose Event Status Register

The general-purpose event status register contains status bits that are set when general events occur, and can be programmed to generate general-purpose event signaling through $\overline{GPE}$. See Table 4−10 for a complete description of the register contents.

PCI register offset: 88h
Register type: Read/Clear/Update, Read-only
Default value: 00h

BIT NUMBER	7	6	5	4	3	2	1	0
RESET STATE	0	0	0	0	0	0	0	0

Table 4−10. General-Purpose Event Status Register Description

BIT	SIGNAL	TYPE	FUNCTION
7 ‡	PWR_STS	RCU	Power change status. This bit is set when software changes the V_{CC} or V_{PP} power state of the socket.
6 ‡	VPP12_STS	RCU	12-V V_{PP} request status. This bit is set when software has changed the requested V_{PP} level to or from 12 V for the socket.
5	RSVD	R	Reserved. This bit returns 0b when read. A write has no effect.
4 ‡	GP4_STS	RCU	GPI4 status. This bit is set on a change in status of the MFUNC5 terminal input level if configured as a general-purpose input, GPI4.
3 ‡	GP3_STS	RCU	GPI3 status. This bit is set on a change in status of the MFUNC4 terminal input level if configured as a general-purpose input, GPI3.
2 ‡	GP2_STS	RCU	GPI2 status. This bit is set on a change in status of the MFUNC2 terminal input level if configured as a general-purpose input, GPI2.
1 ‡	GP1_STS	RCU	GPI1 status. This bit is set on a change in status of the MFUNC1 terminal input level if configured as a general-purpose input, GPI1.
0 ‡	GP0_STS	RCU	GPI0 status. This bit is set on a change in status of the MFUNC0 terminal input level if configured as a general-purpose input, GPI0.

‡ This bit is cleared only by the assertion of $\overline{GRST}$.

4.32 General-Purpose Event Enable Register

The general-purpose event enable register contains bits that are set to enable $\overline{GPE}$ signals. See Table 4−11 for a complete description of the register contents.

PCI register offset: 89h
Register type: Read-only, Read/Write
Default value: 00h

BIT NUMBER	7	6	5	4	3	2	1	0
RESET STATE	0	0	0	0	0	0	0	0

Table 4−11. General-Purpose Event Enable Register Description

BIT	SIGNAL	TYPE	FUNCTION
7 ‡	PWR_EN	RW	Power change $\overline{GPE}$ enable. When this bit is set, $\overline{GPE}$ is signaled on PWR_STS events.
6 ‡	VPP12_EN	RW	12-V V_{PP} $\overline{GPE}$ enable. When this bit is set, $\overline{GPE}$ is signaled on VPP12_STS events.
5	RSVD	R	Reserved. This bit returns 0b when read. A write has no effect.
4 ‡	GP4_EN	RW	GPI4 $\overline{GPE}$ enable. When this bit is set, $\overline{GPE}$ is signaled on GP4_STS events.
3 ‡	GP3_EN	RW	GPI3 $\overline{GPE}$ enable. When this bit is set, $\overline{GPE}$ is signaled on GP3_STS events.
2 ‡	GP2_EN	RW	GPI2 $\overline{GPE}$ enable. When this bit is set, $\overline{GPE}$ is signaled on GP2_STS events.
1 ‡	GP1_EN	RW	GPI1 $\overline{GPE}$ enable. When this bit is set, $\overline{GPE}$ is signaled on GP1_STS events.
0 ‡	GP0_EN	RW	GPI0 $\overline{GPE}$ enable. When this bit is set, $\overline{GPE}$ is signaled on GP0_STS events.

‡ This bit is cleared only by the assertion of $\overline{GRST}$.

4.33 General-Purpose Input Register

The general-purpose input register contains the logical value of the data input to the GPI terminals. See Table 4−12 for a complete description of the register contents.

PCI register offset: 8Ah
Register type: Read/Update, Read-only
Default value: XXh

BIT NUMBER	7	6	5	4	3	2	1	0
RESET STATE	0	0	0	X	X	X	X	X

Table 4−12. General-Purpose Input Register Description

BIT	SIGNAL	TYPE	FUNCTION
7−5	RSVD	R	Reserved. These bits return 000b when read. Writes have no effect.
4	GPI4_DATA	RU	GPI4 data input. This bit represents the logical value of the data input from GPI4.
3	GPI3_DATA	RU	GPI3 data input. This bit represents the logical value of the data input from GPI3.
2	GPI2_DATA	RU	GPI2 data input. This bit represents the logical value of the data input from GPI2.
1	GPI1_DATA	RU	GPI1 data input. This bit represents the logical value of the data input from GPI1.
0	GPI0_DATA	RU	GPI0 data input. This bit represents the logical value of the data input from GPI0.

4.34 General-Purpose Output Register

The general-purpose output register is used to drive the GPO4−GPO0 outputs. See Table 4−13 for a complete description of the register contents.

PCI register offset: 8Bh
Register type: Read-only, Read/Write
Default value: 00h

BIT NUMBER	7	6	5	4	3	2	1	0
RESET STATE	0	0	0	0	0	0	0	0

Table 4−13. General-Purpose Output Register Description

BIT	SIGNAL	TYPE	FUNCTION
7−5	RSVD	R	Reserved. These bits return 000b when read. Writes have no effect.
4 ‡	GPO4_DATA	RW	This bit represents the logical value of the data driven to GPO4.
3 ‡	GPO3_DATA	RW	This bit represents the logical value of the data driven to GPO3.
2 ‡	GPO2_DATA	RW	This bit represents the logical value of the data driven to GPO2.
1 ‡	GPO1_DATA	RW	This bit represents the logical value of the data driven to GPO1.
0 ‡	GPO0_DATA	RW	This bit represents the logical value of the data driven to GPO0.

‡ This bit is cleared only by the assertion of $\overline{\text{GRST}}$.

4.35 Multifunction Routing Status Register

The multifunction routing status register is used to configure the MFUNC6−MFUNC0 terminals. These terminals may be configured for various functions. This register is intended to be programmed once at power-on initialization. The default value for this register can also be loaded through a serial EEPROM. See Table 4−14 for a complete description of the register contents.

PCI register offset: 8Ch
Register type: Read/Write, Read-only
Default value: 0100 1000h

BIT NUMBER	31	30	29	28	27	26	25	24	23	22	21	20	19	18	17	16
RESET STATE	0	0	0	0	0	0	0	1	0	0	0	0	0	0	0	0
BIT NUMBER	**15**	**14**	**13**	**12**	**11**	**10**	**9**	**8**	**7**	**6**	**5**	**4**	**3**	**2**	**1**	**0**
RESET STATE	0	0	0	1	0	0	0	0	0	0	0	0	0	0	0	0

Table 4−14. Multifunction Routing Status Register Description

BIT	SIGNAL	TYPE	FUNCTION
31−28 ‡	RSVD	R	Bits 31−28 return 0h when read.
27−24 ‡	MFUNC6	RW	Multifunction terminal 6 configuration. These bits control the internal signal mapped to the MFUNC6 terminal as follows: 0000 = $\overline{\text{RSVD}}$ 0100 = IRQ4 1000 = IRQ8 1100 = IRQ12 0001 = $\overline{\text{CLKRUN}}$ 0101 = IRQ5 1001 = IRQ9 1101 = IRQ13 0010 = IRQ2 0110 = IRQ6 1010 = IRQ10 1110 = IRQ14 0011 = IRQ3 0111 = IRQ7 1011 = IRQ11 1111 = IRQ15
23−20 ‡	MFUNC5	RW	Multifunction terminal 5 configuration. These bits control the internal signal mapped to the MFUNC5 terminal as follows: 0000 = GPI4 0100 = SC_DBG_RX 1000 = CAUDPWM 1100 = LEDA1 0001 = $\overline{\text{GPO4}}$ 0101 = IRQ5 1001 = RSVD 1101 = $\overline{\text{LED}}$_SKT 0010 = $\overline{\text{PCGNT}}$ 0110 = RSVD 1010 = FM_LED 1110 = $\overline{\text{GPE}}$ 0011 = RSVD 0111 = RSVD 1011 = OHCI_LED 1111 = IRQ15
19−16 ‡	MFUNC4	RW	Multifunction terminal 4 configuration. These bits control the internal signal mapped to the MFUNC4 terminal as follows: 0000 = GPI3 0100 = IRQ4 1000 = CAUDPWM 1100 = $\overline{\text{RI_OUT}}$ 0001 = GPO3 0101 = SC_DBG_TX 1001 = $\overline{\text{IRQ9}}$ 1101 = $\overline{\text{LED}}$_SKT 0010 = RSVD 0110 = RSVD 1010 = $\overline{\text{INTD}}$ 1110 = $\overline{\text{GPE}}$ 0011 = RSVD 0111 = RSVD 1011 = FM_LED 1111 = IRQ15
15−12 ‡	MFUNC3	RW	Multifunction terminal 3 configuration. These bits control the internal signal mapped to the MFUNC3 terminal as follows: 0000 = RSVD 0100 = IRQ4 1000 = IRQ8 1100 = IRQ12 0001 = IRQSER 0101 = IRQ5 1001 = IRQ9 1101 = IRQ13 0010 = IRQ2 0110 = IRQ6 1010 = IRQ10 1110 = IRQ14 0011 = IRQ3 0111 = IRQ7 1011 = IRQ11 1111 = IRQ15
11−8 ‡	MFUNC2	RW	Multifunction terminal 2 configuration. These bits control the internal signal mapped to the MFUNC2 terminal as follows: 0000 = GPI2 0100 = RSVD 1000 = CAUDPWM 1100 = $\overline{\text{RI_OUT}}$ 0001 = $\overline{\text{GPO2}}$ 0101 = RSVD 1001 = FM_LED 1101 = $\overline{\text{TEST}}$_MUX 0010 = $\overline{\text{PCREQ}}$ 0110 = RSVD 1010 = $\overline{\text{IRQ10}}$ 1110 = $\overline{\text{GPE}}$ 0011 = IRQ3 0111 = RSVD 1011 = $\overline{\text{INTC}}$ 1111 = IRQ7

‡ These bits are cleared only by the assertion of $\overline{\text{GRST}}$.

Table 4−14. Multifunction Routing Status Register Description (Continued)

BIT	SIGNAL	TYPE	FUNCTION
7−4 ‡	MFUNC1	RW	Multifunction terminal 1 configuration. These bits control the internal signal mapped to the MFUNC1 terminal as follows: 0000 = GPI1 0100 = OHCI_LED 1000 = CAUDPWM 1100 = LEDA1 0001 = GPO1 0101 = IRQ5 1001 = IRQ9 1101 = RSVD 0010 = INTB 0110 = RSVD 1010 = IRQ10 1110 = GPE 0011 = IRQ3 0111 = RSVD 1011 = IRQ11 1111 = IRQ15
3−0 ‡	MFUNC0	RW	Multifunction terminal 0 configuration. These bits control the internal signal mapped to the MFUNC0 terminal as follows: 0000 = GPI0 0100 = IRQ4 1000 = CAUDPWM 1100 = LEDA1 0001 = GPO0 0101 = IRQ5 1001 = IRQ9 1101 = RSVD 0010 = INTA 0110 = RSVD 1010 = IRQ10 1110 = GPE 0011 = IRQ3 0111 = RSVD 1011 = IRQ11 1111 = IRQ15

‡ These bits are cleared only by the assertion of GRST.

4.36 Retry Status Register

The contents of the retry status register enable the retry time-out counters and display the retry expiration status. The flags are set when the controller, as a master, receives a retry and does not retry the request within 2^{15} clock cycles. The flags are cleared by writing a 1b to the bit. See Table 4−15 for a complete description of the register contents.

PCI register offset: 90h (Function 0)
Register type: Read-only, Read/Write, Read/Clear
Default value: C0h

BIT NUMBER	7	6	5	4	3	2	1	0
RESET STATE	1	1	0	0	0	0	0	0

Table 4−15. Retry Status Register Description

BIT	SIGNAL	TYPE	FUNCTION
7 ‡	PCIRETRY	RW	PCI retry time-out counter enable. This bit is encoded as: 0 = PCI retry counter disabled 1 = PCI retry counter enabled (default)
6 ‡§	CBRETRY	RW	CardBus retry time-out counter enable. This bit is encoded as: 0 = CardBus retry counter disabled 1 = CardBus retry counter enabled (default)
5 ‡	TEXP_CBB	RC	CardBus target B retry expired. Write a 1b to clear this bit. 0 = Inactive (default) 1 = Retry has expired
4	RSVD	R	Reserved. This bit returns 0b when read.
3 ‡§	TEXP_CBA	RC	CardBus target A retry expired. Write a 1b to clear this bit. 0 = Inactive (default) 1 = Retry has expired
2	RSVD	R	Reserved. This bit returns 0b when read.
1 ‡	TEXP_PCI	RC	PCI target retry expired. Write a 1b to clear this bit. 0 = Inactive (default) 1 = Retry has expired
0	RSVD	R	Reserved. This bit returns 0b when read.

‡ This bit is cleared only by the assertion of GRST.
§ These bits are global in nature and must be accessed only through function 0.

4.37 Card Control Register

The card control register is provided for PCI1130 compatibility. The $\overline{\text{RI_OUT}}$ signal is enabled through this register. See Table 4−16 for a complete description of the register contents.

PCI register offset: 91h
Register type: Read-only, Read/Write
Default value: 00h

BIT NUMBER	7	6	5	4	3	2	1	0
RESET STATE	0	0	0	0	0	0	0	0

Table 4−16. Card Control Register Description

BIT	SIGNAL	TYPE	FUNCTION
7 ‡§	RIENB	RW	Ring indicate enable. When this bit is 1b, the $\overline{\text{RI_OUT}}$ output is enabled. This bit defaults to 0b.
6−3	RSVD	RW	These bits are reserved. Do not change the value of these bits.
2 ‡	AUD2MUX	RW	CardBus audio-to-MFUNC. When this bit is set, the CAUDIO CardBus signal must be routed through an MFUNC terminal. 0 = CAUDIO set to CAUDPWM on MFUNC terminal (default) 1 = CAUDIO is not routed
1 ‡	SPKROUTEN	RW	When bit 1 is set, the $\overline{\text{SPKR}}$ terminal from the PC Card is enabled and is routed to tthe SPKROUT terminal. The SPKROUT terminal drives data only when the SPKROUTEN bit is set. This bit is encoded as: 0 = $\overline{\text{SPKR}}$ to SPKROUT not enabled (default) 1 = $\overline{\text{SPKR}}$ to SPKROUT enabled
0 ‡	IFG	RW	Interrupt flag. This bit is the interrupt flag for 16-bit I/O PC Cards and for CardBus cards. This bit is set when a functional interrupt is signaled from a PC Card interface. Write back a 1b to clear this bit. 0 = No PC Card functional interrupt detected (default) 1 = PC Card functional interrupt detected

‡ This bit is cleared only by the assertion of $\overline{\text{GRST}}$.
§ This bit is global in nature and must be accessed only through function 0.

4.38 Device Control Register

The device control register is provided for PCI1130 compatibility. The interrupt mode select is programmed through this register. The socket-capable force bits are also programmed through this register. See Table 4−17 for a complete description of the register contents.

PCI register offset: 92h (Function 0)
Register type: Read-only, Read/Write
Default value: 66h

BIT NUMBER	7	6	5	4	3	2	1	0
RESET STATE	0	1	1	0	0	1	1	0

Table 4−17. Device Control Register Description

BIT	SIGNAL	TYPE	FUNCTION
7 ‡	SKTPWR_LOCK	RW	Socket power lock bit. When this bit is set to 1b, software cannot power down the PC Card socket while in D3. It may be necessary to lock socket power in order to support wake on LAN or RING if the operating system is programmed to power down a socket when the CardBus controller is placed in the D3 state.
6 ‡§	3VCAPABLE	RW	3-V socket capable force bit. 0 = Not 3-V capable 1 = 3-V capable (default)
5 ‡	IO16R2	RW	Diagnostic bit. This bit defaults to 1b.
4	PCI_PM_ VERSION_CTL	R	PCI power management version control. This bit controls the value reported in the Version field of the power management capabilities register of the CardBus function (PCI offset A2h, see Section 4.42). 0 = Version field reports 010b for *PCI Bus Power Management Interface Specification* (Revision 1.1) compliance 1 = Version field reports 011b for *PCI Bus Power Management Interface Specification* (Revision 1.2) compliance
3 ‡§	TEST	RW	TI test bit. Write only 0b to this bit.
2−1 ‡§	INTMODE	RW	Interrupt mode. These bits select the interrupt signaling mode. The interrupt mode bits are encoded: 00 = Parallel PCI interrupts only 01 = Reserved 10 = IRQ serialized interrupts and parallel PCI interrupts $\overline{\text{INTA}}$, $\overline{\text{INTB}}$, $\overline{\text{INTC}}$, and $\overline{\text{INTD}}$ 11 = IRQ and PCI serialized interrupts (default)
0 ‡§	RSVD	RW	Reserved. Bit 0 is reserved for test purposes. Only a 0b must be written to this bit.

‡ This bit is cleared only by the assertion of $\overline{\text{GRST}}$.
§ These bits are global in nature and must be accessed only through function 0.

4.39 Diagnostic Register

The diagnostic register is provided for internal TI test purposes. It is a read/write register, but only 00h must be written to it. See Table 4−18 for a complete description of the register contents.

PCI register offset: 93h (Function 0)
Register type: Read/Write
Default value: 60h

BIT NUMBER	7	6	5	4	3	2	1	0
RESET STATE	0	1	1	0	0	0	0	0

Table 4−18. Diagnostic Register Description

BIT	SIGNAL	TYPE	FUNCTION
7 ‡§	TRUE_VAL	RW	This bit defaults to 0b. This bit is encoded as: 0 = Reads true values in PCI vendor ID and PCI device ID registers (default) 1 = Returns all 1s to reads from the PCI vendor ID and PCI device ID registers
6 ‡	RSVD	R	Reserved. This bit is read-only and returns 1b when read.
5 ‡	CSC	RW	CSC interrupt routing control 0 = CSC interrupts routed to PCI if ExCA 803 bit 4 = 1 1 = CSC interrupts routed to PCI if ExCA 805 bits 7−4 = 0000b (default). In this case, the setting of ExCA 803 bit 4 is a don't care.
4 ‡§	DIAG4	RW	Diagnostic RETRY_DIS. Delayed transaction disable.
3 ‡§	DIAG3	RW	Diagnostic RETRY_EXT. Extends the latency from 16 to 64.
2 ‡§	DIAG2	RW	Diagnostic DISCARD_TIM_SEL_CB. Set = 2^{10}, reset = 2^{15}.
1 ‡§	DIAG1	RW	Diagnostic DISCARD_TIM_SEL_PCI. Set = 2^{10}, reset = 2^{15}.
0 ‡	RSVD	RW	These bits are reserved. Do not change the value of these bits.

‡ This bit is cleared only by the assertion of $\overline{\text{GRST}}$.
§ This bit is global and is accessed only through function 0.

4.40 Capability ID Register

The capability ID register identifies the linked list item as the register for PCI power management. The register returns 01h when read, which is the unique ID assigned by the PCI SIG for the PCI location of the capabilities pointer and the value.

PCI register offset: A0h
Register type: Read-only
Default value: 01h

BIT NUMBER	7	6	5	4	3	2	1	0
RESET STATE	0	0	0	0	0	0	0	1

4.41 Next Item Pointer Register

The contents of this register indicate the next item in the linked list of the PCI power management capabilities. Because the PCIxx12 functions only include one capabilities item, this register returns 00h when read.

PCI register offset: A1h
Register type: Read-only
Default value: 00h

BIT NUMBER	7	6	5	4	3	2	1	0
RESET STATE	0	0	0	0	0	0	0	0

4.42 Power Management Capabilities Register

The power management capabilities register contains information on the capabilities of the PC Card function related to power management. The CardBus bridge function supports D0, D1, D2, and D3 power states. Default register value is FE12h for operation in accordance with *PCI Bus Power Management Interface Specification* revision 1.1. See Table 4−19 for a complete description of the register contents.

PCI register offset: A2h (Function 0)
Register type: Read-only, Read/Write
Default value: FE12h

BIT NUMBER	15	14	13	12	11	10	9	8	7	6	5	4	3	2	1	0
RESET STATE	1	1	1	1	1	1	1	0	0	0	0	1	0	0	1	0

Table 4−19. Power Management Capabilities Register Description

BIT	SIGNAL	TYPE	FUNCTION
15 ‡ 14−11	PME support	RW R	This 5-bit field indicates the power states from which the controller function can assert $\overline{PME}$. A 0b for any bit indicates that the function cannot assert the $\overline{PME}$ signal while in that power state. These 5 bits return 11111b when read. Each of these bits is described below: Bit 15 − defaults to a 1b indicating the $\overline{PME}$ signal can be asserted from the $D3_{cold}$ state. This bit is read/write because wake-up support from $D3_{cold}$ is contingent on the system providing an auxiliary power source to the V_{CC} terminals. If the system designer chooses not to provide an auxiliary power source to the V_{CC} terminals for $D3_{cold}$ wake-up support, then BIOS must write a 0b to this bit. Bit 14 − contains the value 1b to indicate that the $\overline{PME}$ signal can be asserted from the $D3_{hot}$ state. Bit 13 − contains the value 1b to indicate that the $\overline{PME}$ signal can be asserted from the D2 state. Bit 12 − contains the value 1b to indicate that the $\overline{PME}$ signal can be asserted from the D1 state. Bit 11 − contains the value 1b to indicate that the $\overline{PME}$ signal can be asserted from the D0 state.
10	D2_Support	R	This bit returns a 1b when read, indicating that the function supports the D2 device power state.
9	D1_Support	R	This bit returns a 1b when read, indicating that the function supports the D1 device power state.
8−6	RSVD	R	Reserved. These bits return 000b when read.
5	DSI	R	Device-specific initialization. This bit returns 0b when read.
4	AUX_PWR	R	Auxiliary power source. This bit is meaningful only if bit 15 ($D3_{cold}$ supporting $\overline{PME}$) is set. When this bit is set, it indicates that support for $\overline{PME}$ in $D3_{cold}$ requires auxiliary power supplied by the system by way of a proprietary delivery vehicle. A 0b in this bit field indicates that the function supplies its own auxiliary power source. If the function does not support PME while in the $D3_{cold}$ state (bit 15 = 0), then this field must always return 0b.
3	PMECLK	R	When this bit is 1b, it indicates that the function relies on the presence of the PCI clock for $\overline{PME}$ operation. When this bit is 0b, it indicates that no PCI clock is required for the function to generate $\overline{PME}$. Functions that do not support PME generation in any state must return 0b for this bit.
2−0	Version	R	Power management version. If bit 4 (PCI_PM_VERSION_CTRL) in the device control register (PCI offset 92h, see Section 4.38) is 0b, this field returns 010b indicating *PCI Bus Power Management Interface Specification* (Revision 1.1) compatibility. If bit 4 (PCI_PM_VERSION_CTRL) in the device control register is 1b, this field returns 011b indicating *PCI Bus Power Management Interface Specification* (Revision 1.2) compatibility.

‡ This bit is cleared only by the assertion of $\overline{GRST}$.

4.43 Power Management Control/Status Register

The power management control/status register determines and changes the current power state of the CardBus function. The contents of this register are not affected by the internally generated reset caused by the transition from the $D3_{hot}$ to D0 state. See Table 4−20 for a complete description of the register contents.

All PCI registers, ExCA registers, and CardBus registers are reset as a result of a $D3_{hot}$-to-D0 state transition, with the exception of the $\overline{PME}$ context bits (if $\overline{PME}$ is enabled) and the $\overline{GRST}$ only bits.

PCI register offset: A4h (Function 0)
Register type: Read-only, Read/Write, Read/Write/Clear
Default value: 0000h

BIT NUMBER	15	14	13	12	11	10	9	8	7	6	5	4	3	2	1	0
RESET STATE	0	0	0	0	0	0	0	0	0	0	0	0	0	0	0	0

Table 4−20. Power Management Control/Status Register Description

BIT	SIGNAL	TYPE	FUNCTION
15 †	PMESTAT	RC	PME status. This bit is set when the CardBus function would normally assert the $\overline{PME}$ signal, independent of the state of the PME_EN bit. This bit is cleared by a writeback of 1b, and this also clears the $\overline{PME}$ signal if $\overline{PME}$ was asserted by this function. Writing a 0b to this bit has no effect.
14−13	DATASCALE	R	This 2-bit field returns 00b when read. The CardBus function does not return any dynamic data.
12−9	DATASEL	R	Data select. This 4-bit field returns 0s when read. The CardBus function does not return any dynamic data.
8 ‡	PME_ENABLE	RW	This bit enables the function to assert $\overline{PME}$. If this bit is cleared, then assertion of $\overline{PME}$ is disabled. This bit is not cleared by the assertion of $\overline{PRST}$. It is only cleared by the assertion of $\overline{GRST}$.
7−2	RSVD	R	Reserved. These bits return 00 0000b when read.
1−0	PWRSTATE	RW	Power state. This 2-bit field is used both to determine the current power state of a function and to set the function into a new power state. This field is encoded as: 00 = D0 01 = D1 10 = D2 11 = $D3_{hot}$

† One or more bits in this register are PME context bits and can be cleared only by the assertion of $\overline{GRST}$ when $\overline{PME}$ is enabled. If $\overline{PME}$ is not enabled, then this bit is cleared by the assertion of $\overline{PRST}$ or $\overline{GRST}$.
‡ This bit is cleared only by the assertion of $\overline{GRST}$.

4.44 Power Management Control/Status Bridge Support Extensions Register

This register supports PCI bridge-specific functionality. It is required for all PCI-to-PCI bridges. See Table 4−21 for a complete description of the register contents.

PCI register offset: A6h (Function 0)
Register type: Read-only
Default value: C0h

BIT NUMBER	7	6	5	4	3	2	1	0
RESET STATE	1	1	0	0	0	0	0	0

Table 4−21. Power Management Control/Status Bridge Support Extensions Register Description

BIT	SIGNAL	TYPE	FUNCTION
7	BPCC_EN	R	Bus power/clock control enable. This bit returns 1b when read. This bit is encoded as: 0 = Bus power/clock control is disabled 1 = Bus power/clock control is enabled (default) A 0b indicates that the bus power/clock control policies defined in the *PCI Bus Power Management Interface Specification* are disabled. When the bus power/clock control enable mechanism is disabled, the power state field (bits 1−0) of the power management control/status register (PCI offset A4h, see Section 4.43) cannot be used by the system software to control the power or the clock of the secondary bus. A 1b indicates that the bus power/clock control mechanism is enabled.
6	$\overline{\text{B2_B3}}$	R	B2/B3 support for $D3_{hot}$. The state of this bit determines the action that is to occur as a direct result of programming the function to $D3_{hot}$. This bit is only meaningful if bit 7 (BPCC_EN) is a 1b. This bit is encoded as: 0 = When the bridge is programmed to $D3_{hot}$, its secondary bus has its power removed (B3) 1 = When the bridge function is programmed to $D3_{hot}$, its secondary bus PCI clock is stopped (B2) (default)
5−0	RSVD	R	Reserved. These bits return 00 0000b when read.

4.45 Power-Management Data Register

The power-management data register returns 00h when read, because the CardBus functions do not report dynamic data.

PCI register offset: A7h (Function 0)
Register type: Read-only
Default value: 00h

BIT NUMBER	7	6	5	4	3	2	1	0
RESET STATE	0	0	0	0	0	0	0	0

4.46 Serial Bus Data Register

The serial bus data register is for programmable serial bus byte reads and writes. This register represents the data when generating cycles on the serial bus interface. To write a byte, this register must be programmed with the data, the serial bus index register must be programmed with the byte address, the serial bus slave address must be programmed with the 7-bit slave address, and the read/write indicator bit must be reset.

On byte reads, the byte address is programmed into the serial bus index register, the serial bus slave address register must be programmed with both the 7-bit slave address and the read/write indicator bit, and bit 5 (REQBUSY) in the serial bus control and status register (see Section 4.49) must be polled until clear. Then the contents of this register are valid read data from the serial bus interface. See Table 4−22 for a complete description of the register contents.

PCI register offset: B0h (function 0)
Register type: Read/Write
Default value: 00h

BIT NUMBER	7	6	5	4	3	2	1	0
RESET STATE	0	0	0	0	0	0	0	0

Table 4−22. Serial Bus Data Register Description

BIT	SIGNAL	TYPE	FUNCTION
7−0 ‡	SBDATA	RW	Serial bus data. This bit field represents the data byte in a read or write transaction on the serial interface. On reads, the REQBUSY bit must be polled to verify that the contents of this register are valid.

‡ These bits are cleared only by the assertion of $\overline{\text{GRST}}$.

4.47 Serial Bus Index Register

The serial bus index register is for programmable serial bus byte reads and writes. This register represents the byte address when generating cycles on the serial bus interface. To write a byte, the serial bus data register must be programmed with the data, this register must be programmed with the byte address, and the serial bus slave address must be programmed with both the 7-bit slave address and the read/write indicator.

On byte reads, the word address is programmed into this register, the serial bus slave address must be programmed with both the 7-bit slave address and the read/write indicator bit, and bit 5 (REQBUSY) in the serial bus control and status register (see Section 4.49) must be polled until clear. Then the contents of the serial bus data register are valid read data from the serial bus interface. See Table 4−23 for a complete description of the register contents.

PCI register offset: B1h (function 0)
Register type: Read/Write
Default value: 00h

BIT NUMBER	7	6	5	4	3	2	1	0
RESET STATE	0	0	0	0	0	0	0	0

Table 4−23. Serial Bus Index Register Description

BIT	SIGNAL	TYPE	FUNCTION
7−0 ‡	SBINDEX	RW	Serial bus index. This bit field represents the byte address in a read or write transaction on the serial interface.

‡ These bits are cleared only by the assertion of $\overline{\text{GRST}}$.

4.48 Serial Bus Slave Address Register

The serial bus slave address register is for programmable serial bus byte read and write transactions. To write a byte, the serial bus data register must be programmed with the data, the serial bus index register must be programmed with the byte address, and this register must be programmed with both the 7-bit slave address and the read/write indicator bit.

On byte reads, the byte address is programmed into the serial bus index register, this register must be programmed with both the 7-bit slave address and the read/write indicator bit, and bit 5 (REQBUSY) in the serial bus control and status register (see Section 4.49) must be polled until clear. Then the contents of the serial bus data register are valid read data from the serial bus interface. See Table 4−24 for a complete description of the register contents.

PCI register offset: B2h (function 0)
Register type: Read/Write
Default value: 00h

BIT NUMBER	7	6	5	4	3	2	1	0
RESET STATE	0	0	0	0	0	0	0	0

Table 4−24. Serial Bus Slave Address Register Description

BIT	SIGNAL	TYPE	FUNCTION
7−1 ‡	SLAVADDR	RW	Serial bus slave address. This bit field represents the slave address of a read or write transaction on the serial interface.
0 ‡	RWCMD	RW	Read/write command. Bit 0 indicates the read/write command bit presented to the serial bus on byte read and write accesses. 0 = A byte write access is requested to the serial bus interface 1 = A byte read access is requested to the serial bus interface

‡ These bits are cleared only by the assertion of $\overline{\text{GRST}}$.

4.49 Serial Bus Control/Status Register

The serial bus control and status register communicates serial bus status information and selects the quick command protocol. Bit 5 (REQBUSY) in this register must be polled during serial bus byte reads to indicate when data is valid in the serial bus data register. See Table 4−25 for a complete description of the register contents.

PCI register offset: B3h (function 0)
Register type: Read-only, Read/Write, Read/Clear
Default value: 00h

BIT NUMBER	7	6	5	4	3	2	1	0
RESET STATE	0	0	0	0	0	0	0	0

Table 4−25. Serial Bus Control/Status Register Description

BIT	SIGNAL	TYPE	FUNCTION
7 ‡	PROT_SEL	RW	Protocol select. When bit 7 is set, the send-byte protocol is used on write requests and the receive-byte protocol is used on read commands. The word address byte in the serial bus index register (see Section 4.47) is not output by the controller when bit 7 is set.
6	RSVD	R	Reserved. Bit 6 returns 0b when read.
5	REQBUSY	R	Requested serial bus access busy. Bit 5 indicates that a requested serial bus access (byte read or write) is in progress. A request is made, and bit 5 is set, by writing to the serial bus slave address register (see Section 4.48). Bit 5 must be polled on reads from the serial interface. After the byte read access has been completed, this bit is cleared and the read data is valid in the serial bus data register.
4	ROMBUSY	R	Serial EEPROM busy status. Bit 4 indicates the status of the PCIxx12 serial EEPROM circuitry. Bit 4 is set during the loading of the subsystem ID and other default values from the serial bus EEPROM. 0 = Serial EEPROM circuitry is not busy 1 = Serial EEPROM circuitry is busy
3 ‡	SBDETECT	RW	Serial bus detect. When the serial bus interface is detected through a pullup resistor on the SCL terminal after reset, this bit is set to 1b. 0 = Serial bus interface not detected 1 = Serial bus interface detected
2 ‡	SBTEST	RW	Serial bus test. When bit 2 is set, the serial bus clock frequency is increased for test purposes. 0 = Serial bus clock at normal operating frequency, ≈ 100 kHz (default) 1 = Serial bus clock frequency increased for test purposes
1 ‡	REQ_ERR	RC	Requested serial bus access error. Bit 1 indicates when a data error occurs on the serial interface during a requested cycle and may be set due to a missing acknowledge. Bit 1 is cleared by a writeback of 1b. 0 = No error detected during user-requested byte read or write cycle 1 = Data error detected during user-requested byte read or write cycle
0 ‡	ROM_ERR	RC	EEPROM data error status. Bit 0 indicates when a data error occurs on the serial interface during the auto-load from the serial bus EEPROM and may be set due to a missing acknowledge. Bit 0 is also set on invalid EEPROM data formats. See Section 3.6.4, *Serial Bus EEPROM Application*, for details on EEPROM data format. Bit 0 is cleared by a writeback of 1b. 0 = No error detected during autoload from serial bus EEPROM 1 = Data error detected during autoload from serial bus EEPROM

‡ This bit is cleared only by the assertion of $\overline{\text{GRST}}$.

5 ExCA Compatibilty Registers (Function 0)

The ExCA (exchangeable card architecture) registers implemented in the PCIxx12 controller are register-compatible with the Intel 82365SL-DF PCMCIA controller. ExCA registers are identified by an offset value, which is compatible with the legacy I/O index/data scheme used on the Intel™ 82365 ISA controller. The ExCA registers are accessed through this scheme by writing the register offset value into the index register (I/O base), and reading or writing the data register (I/O base + 1). The I/O base address used in the index/data scheme is programmed in the PC Card 16-bit I/F legacy mode base address register, which is shared by both card sockets. The offsets from this base address run contiguously from 00h to 3Fh for the socket. See Figure 5−1 for an ExCA I/O mapping illustration. Table 5−1 identifies each ExCA register and its respective ExCA offset.

The controller also provides a memory-mapped alias of the ExCA registers by directly mapping them into PCI memory space. They are located through the CardBus socket registers/ExCA registers base address register (PCI register 10h) at memory offset 800h. Each socket has a separate base address programmable by function. See Figure 5−2 for an ExCA memory mapping illustration. This illustration also identifies the CardBus socket register mapping, which is mapped into the same 4K window at memory offset 0h.

The interrupt registers in the ExCA register set, as defined by the 82365SL specification, control such card functions as reset, type, interrupt routing, and interrupt enables. Special attention must be paid to the interrupt routing registers and the host interrupt signaling method selected for the controller to ensure that all possible PCIxx12 interrupts can potentially be routed to the programmable interrupt controller. The ExCA registers that are critical to the interrupt signaling are at memory address ExCA offsets 803h and 805h.

Access to I/O mapped 16-bit PC Cards is available to the host system via two ExCA I/O windows. These are regions of host I/O address space into which the card I/O space is mapped. These windows are defined by start, end, and offset addresses programmed in the ExCA registers described in this chapter. I/O windows have byte granularity.

Access to memory-mapped 16-bit PC Cards is available to the host system via five ExCA memory windows. These are regions of host memory space into which the card memory space is mapped. These windows are defined by start, end, and offset addresses programmed in the ExCA registers described in this chapter. Memory windows have 4-Kbyte granularity.

A bit location followed by a ‡ means that this bit is not cleared by the assertion of $\overline{\text{PRST}}$. This bit is only cleared by the assertion of $\overline{\text{GRST}}$. This is necessary to retain device context during the transition from D3 to D0.

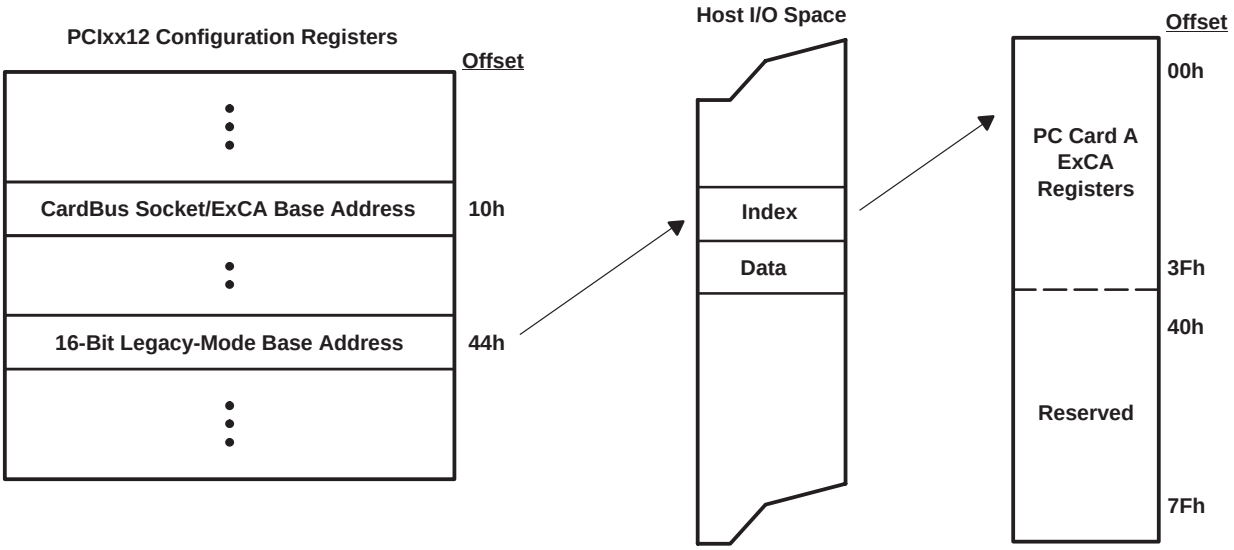

Offset of desired register is placed in the index register and the data from that location is returned in the data register.

Figure 5−1. ExCA Register Access Through I/O

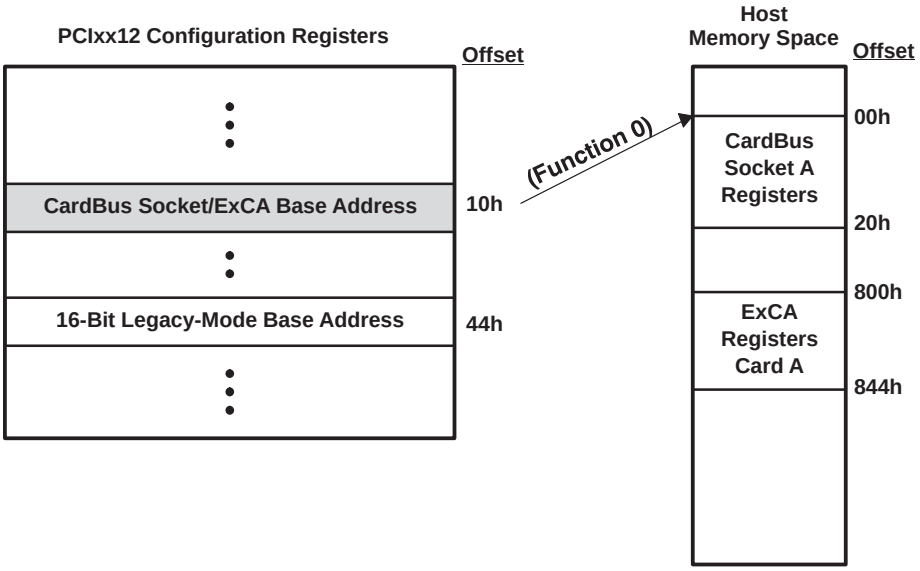

Offsets are from the CardBus socket/ExCA base address register's base address.

Figure 5−2. ExCA Register Access Through Memory

Table 5−1. ExCA Registers and Offsets

EXCA REGISTER NAME	PCI MEMORY ADDRESS OFFSET (HEX)	EXCA OFFSET (CARD A)
Identification and revision ‡	800	00
Interface status	801	01
Power control †	802†	02
Interrupt and general control †	803†	03
Card status change †	804†	04
Card status change interrupt configuration †	805†	05
Address window enable	806	06
I / O window control	807	07
I / O window 0 start-address low-byte	808	08
I / O window 0 start-address high-byte	809	09
I / O window 0 end-address low-byte	80A	0A
I / O window 0 end-address high-byte	80B	0B
I / O window 1 start-address low-byte	80C	0C
I / O window 1 start-address high-byte	80D	0D
I / O window 1 end-address low-byte	80E	0E
I / O window 1 end-address high-byte	80F	0F
Memory window 0 start-address low-byte	810	10
Memory window 0 start-address high-byte	811	11
Memory window 0 end-address low-byte	812	12
Memory window 0 end-address high-byte	813	13
Memory window 0 offset-address low-byte	814	14
Memory window 0 offset-address high-byte	815	15
Card detect and general control †	816	16
Reserved	817	17
Memory window 1 start-address low-byte	818	18
Memory window 1 start-address high-byte	819	19
Memory window 1 end-address low-byte	81A	1A
Memory window 1 end-address high-byte	81B	1B
Memory window 1 offset-address low-byte	81C	1C
Memory window 1 offset-address high-byte	81D	1D
Global control ‡	81E	1E
Reserved	81F	1F
Memory window 2 start-address low-byte	820	20
Memory window 2 start-address high-byte	821	21
Memory window 2 end-address low-byte	822	22
Memory window 2 end-address high-byte	823	23
Memory window 2 offset-address low-byte	824	24
Memory window 2 offset-address high-byte	825	25

† One or more bits in this register are cleared only by the assertion of $\overline{\text{GRST}}$ when $\overline{\text{PME}}$ is enabled. If $\overline{\text{PME}}$ is not enabled, then this bit is cleared by the assertion of $\overline{\text{PRST}}$ or $\overline{\text{GRST}}$.

‡ One or more bits in this register are cleared only by the assertion of $\overline{\text{GRST}}$.

Table 5−1. ExCA Registers and Offsets (Continued)

EXCA REGISTER NAME	PCI MEMORY ADDRESS OFFSET (HEX)	EXCA OFFSET (CARD A)
Reserved	826	26
Reserved	827	27
Memory window 3 start-address low-byte	828	28
Memory window 3 start-address high-byte	829	29
Memory window 3 end-address low-byte	82A	2A
Memory window 3 end-address high-byte	82B	2B
Memory window 3 offset-address low-byte	82C	2C
Memory window 3 offset-address high-byte	82D	2D
Reserved	82E	2E
Reserved	82F	2F
Memory window 4 start-address low-byte	830	30
Memory window 4 start-address high-byte	831	31
Memory window 4 end-address low-byte	832	32
Memory window 4 end-address high-byte	833	33
Memory window 4 offset-address low-byte	834	34
Memory window 4 offset-address high-byte	835	35
I/O window 0 offset-address low-byte	836	36
I/O window 0 offset-address high-byte	837	37
I/O window 1 offset-address low-byte	838	38
I/O window 1 offset-address high-byte	839	39
Reserved	83A	3A
Reserved	83B	3B
Reserved	83C	3C
Reserved	83D	3D
Reserved	83E	3E
Reserved	83F	3F
Memory window page register 0	840	−
Memory window page register 1	841	−
Memory window page register 2	842	−
Memory window page register 3	843	−
Memory window page register 4	844	−

5.1 ExCA Identification and Revision Register

This register provides host software with information on 16-bit PC Card support and 82365SL-DF compatibility. See Table 5−2 for a complete description of the register contents.

NOTE: If bit 5 (SUBSYRW) in the system control register is 1b, then this register is read-only.

ExCA register offset: CardBus Socket Address + 800h: Card A ExCA Offset 00h
Register type: Read/Write, Read-only
Default value: 84h

BIT NUMBER	7	6	5	4	3	2	1	0
RESET STATE	1	0	0	0	0	1	0	0

Table 5−2. ExCA Identification and Revision Register Description

BIT	SIGNAL	TYPE	FUNCTION
7−6 ‡	IFTYPE	R	Interface type. These bits, which are hardwired as 10b, identify the 16-bit PC Card support provided by the controller. The controller supports both I/O and memory 16-bit PC Cards.
5−4 ‡	RSVD	RW	These bits can be used for 82365SL emulation.
3−0 ‡	365REV	RW	82365SL-DF revision. This field stores the Intel 82365SL-DF revision supported by the controller. Host software can read this field to determine compatibility to the 82365SL-DF register set. This field defaults to 0100b upon reset. Writing 0010b to this field places the controller in the 82356SL mode.

‡ These bits are cleared only by the assertion of $\overline{\text{GRST}}$.

5.2 ExCA Interface Status Register

This register provides information on current status of the PC Card interface. An X in the default bit values indicates that the value of the bit after reset depends on the state of the PC Card interface. See Table 5−3 for a complete description of the register contents.

ExCA register offset: CardBus Socket Address + 801h: Card A ExCA Offset 01h
Register type: Read-only
Default value: 00XX XXXXb

BIT NUMBER	7	6	5	4	3	2	1	0
RESET STATE	0	0	X	X	X	X	X	X

Table 5−3. ExCA Interface Status Register Description

BIT	SIGNAL	TYPE	FUNCTION
7	RSVD	R	This bit returns 0b when read. A write has no effect.
6	CARDPWR	R	CARDPWR. Card power. This bit indicates the current power status of the PC Card socket. This bit reflects how the ExCA power control register has been programmed. The bit is encoded as: 0 = V_{CC} and V_{PP} to the socket are turned off (default). 1 = V_{CC} and V_{PP} to the socket are turned on.
5	READY	R	This bit indicates the current status of the READY signal at the PC Card interface. 0 = PC Card is not ready for a data transfer. 1 = PC Card is ready for a data transfer.
4	CARDWP	R	Card write protect. This bit indicates the current status of the WP signal at the PC Card interface. This signal reports to the controller whether or not the memory card is write protected. Further, write protection for an entire PCIxx12 16-bit memory window is available by setting the appropriate bit in the ExCA memory window offset-address high-byte register. 0 = WP signal is 0b. PC Card is R/W. 1 = WP signal is 1b. PC Card is read-only.
3	CDETECT2	R	Card detect 2. This bit indicates the status of the CD2 signal at the PC Card interface. Software can use this and CDETECT1 to determine if a PC Card is fully seated in the socket. 0 = $\overline{CD2}$ signal is 1b. No PC Card inserted. 1 = $\overline{CD2}$ signal is 0b. PC Card at least partially inserted.
2	CDETECT1	R	Card detect 1. This bit indicates the status of the CD1 signal at the PC Card interface. Software can use this and CDETECT2 to determine if a PC Card is fully seated in the socket. 0 = $\overline{CD1}$ signal is 1b. No PC Card inserted. 1 = $\overline{CD1}$ signal is 0b. PC Card at least partially inserted.
1−0	BVDSTAT	R	Battery voltage detect. When a 16-bit memory card is inserted, the field indicates the status of the battery voltage detect signals (BVD1, BVD2) at the PC Card interface, where bit 0 reflects the BVD1 status, and bit 1 reflects BVD2. 00 = Battery is dead. 01 = Battery is dead. 10 = Battery is low; warning. 11 = Battery is good. When a 16-bit I/O card is inserted, this field indicates the status of the $\overline{SPKR}$ (bit 1) signal and the $\overline{STSCHG}$ (bit 0) at the PC Card interface. In this case, the two bits in this field directly reflect the current state of these card outputs.

5.3 ExCA Power Control Register

This register provides PC Card power control. Bit 7 of this register enables the 16-bit outputs on the socket interface, and can be used for power management in 16-bit PC Card applications. See Table 5−5 for a complete description of the register contents.

ExCA register offset: CardBus Socket Address + 802h: Card A ExCA Offset 02h
Register type: Read-only, Read/Write
Default value: 00h

BIT NUMBER	7	6	5	4	3	2	1	0
RESET STATE	0	0	0	0	0	0	0	0

Table 5−4. ExCA Power Control Register Description—82365SL Support

BIT	SIGNAL	TYPE	FUNCTION
7 †	COE	RW	Card output enable. Bit 7 controls the state of all of the 16-bit outputs on the controller. This bit is encoded as: 0 = 16-bit PC Card outputs disabled (default) 1 = 16-bit PC Card outputs enabled
6	RSVD	R	Reserved. Bit 6 returns 0b when read.
5 †	AUTOPWRSWEN	RW	Auto power switch enable. 0 = Automatic socket power switching based on card detects is disabled. 1 = Automatic socket power switching based on card detects is enabled.
4	CAPWREN	RW	PC Card power enable. 0 = V_{CC} = No connection 1 = V_{CC} is enabled and controlled by bit 2 (EXCAPOWER) of the system control register (PCI offset 80h, see Section 4.29).
3−2	RSVD	R	Reserved. Bits 3 and 2 return 00b when read.
1−0	EXCAVPP	RW	PC Card V_{PP} power control. Bits 1 and 0 are used to request changes to card V_{PP}. The controller ignores this field unless V_{CC} to the socket is enabled. This field is encoded as: 00 = No connection (default) 10 = 12 V 01 = V_{CC} 11 = Reserved

† One or more bits in this register are cleared only by the assertion of $\overline{GRST}$ when $\overline{PME}$ is enabled. If $\overline{PME}$ is not enabled, then this bit is cleared by the assertion of $\overline{PRST}$ or $\overline{GRST}$.

Table 5−5. ExCA Power Control Register Description—82365SL-DF Support

BIT	SIGNAL	TYPE	FUNCTION
7 †	COE	RW	Card output enable. This bit controls the state of all of the 16-bit outputs on the controller. This bit is encoded as: 0 = 16-bit PC Card outputs are disabled (default). 1 = 16-bit PC Card outputs are enabled.
6−5	RSVD	R	Reserved. These bits return 00b when read. Writes have no effect.
4−3 †	EXCAVCC	RW	V_{CC}. These bits are used to request changes to card V_{CC}. This field is encoded as: 00 = 0 V (default) 10 = 5 V 01 = 0 V reserved 11 = 3.3 V
2	RSVD	R	This bit returns 0b when read. A write has no effect.
1−0 †	EXCAVPP	RW	V_{PP}. These bits are used to request changes to card V_{PP}. The controller ignores this field unless V_{CC} to the socket is enabled (i.e., 5 Vdc or 3.3 Vdc). This field is encoded as: 00 = 0 V (default) 10 = 12 V 01 = V_{CC} 11 = 0 V reserved

† This bit is cleared only by the assertion of $\overline{GRST}$ when $\overline{PME}$ is enabled. If $\overline{PME}$ is not enabled, then this bit is cleared by the assertion of $\overline{PRST}$ or $\overline{GRST}$.

5.4 ExCA Interrupt and General Control Register

This register controls interrupt routing for I/O interrupts as well as other critical 16-bit PC Card functions. See Table 5−6 for a complete description of the register contents.

ExCA register offset: CardBus Socket Address + 803h: Card A ExCA Offset 03h
Register type: Read/Write
Default value: 00h

BIT NUMBER	7	6	5	4	3	2	1	0
RESET STATE	0	0	0	0	0	0	0	0

Table 5−6. ExCA Interrupt and General Control Register Description

BIT	SIGNAL	TYPE	FUNCTION
7	RINGEN	RW	Card ring indicate enable. Enables the ring indicate function of the BVD1/$\overline{\text{RI}}$ terminals. This bit is encoded as: 0 = Ring indicate disabled (default) 1 = Ring indicate enabled
6 †	RESET	RW	Card reset. This bit controls the 16-bit PC Card RESET signal, and allows host software to force a card reset. This bit affects 16-bit cards only. This bit is encoded as: 0 = RESET signal asserted (default) 1 = RESET signal deasserted.
5 †	CARDTYPE	RW	Card type. This bit indicates the PC Card type. This bit is encoded as: 0 = Memory PC Card is installed (default) 1 = I/O PC Card is installed
4	CSCROUTE	RW	PCI interrupt − CSC routing enable bit. This bit has meaning only if the CSC interrupt routing control bit (PCI offset 93h, bit 5) is 0b. In this case, when this bit is set (high), the card status change interrupts are routed to PCI interrupts. When low, the card status change interrupts are routed using bits 7−4 in the ExCA card status-change interrupt configuration register (ExCA offset 805h, see Section 5.6). This bit is encoded as: 0 = CSC interrupts routed by ExCA registers (default) 1 = CSC interrupts routed to PCI interrupts If the CSC interrupt routing control bit (bit 5) of the diagnostic register (PCI offset 93h, see Section 4.39) is set to 1b, this bit has no meaning, which is the default case.
3−0	INTSELECT	RW	Card interrupt select for I/O PC Card functional interrupts. These bits select the interrupt routing for I/O PC Card functional interrupts. This field is encoded as: 0000 = No IRQ selected (default). CSC interrupts are routed to PCI Interrupts. This bit setting is ORed with bit 4 (CSCROUTE) for backward compatibility. 0001 = IRQ1 enabled 0010 = SMI enabled 0011 = IRQ3 enabled 0100 = IRQ4 enabled 0101 = IRQ5 enabled 0110 = IRQ6 enabled 0111 = IRQ7 enabled 1000 = IRQ8 enabled 1001 = IRQ9 enabled 1010 = IRQ10 enabled 1011 = IRQ11 enabled 1100 = IRQ12 enabled 1101 = IRQ13 enabled 1110 = IRQ14 enabled 1111 = IRQ15 enabled

† This bit is cleared only by the assertion of $\overline{\text{GRST}}$ when $\overline{\text{PME}}$ is enabled. If $\overline{\text{PME}}$ is not enabled, then this bit is cleared by the assertion of $\overline{\text{PRST}}$ or $\overline{\text{GRST}}$.

5.5 ExCA Card Status-Change Register

The ExCA card status-change register controls interrupt routing for I/O interrupts as well as other critical 16-bit PC Card functions. The register enables these interrupt sources to generate an interrupt to the host. When the interrupt source is disabled, the corresponding bit in this register always reads 0b. When an interrupt source is enabled, the corresponding bit in this register is set to indicate that the interrupt source is active. After generating the interrupt to the host, the interrupt service routine must read this register to determine the source of the interrupt. The interrupt service routine is responsible for resetting the bits in this register as well. Resetting a bit is accomplished by one of two methods: a read of this register or an explicit writeback of 1b to the status bit. The choice of these two methods is based on bit 2 (interrupt flag clear mode select) in the ExCA global control register (CB offset 81Eh, see Section 5.20). See Table 5−7 for a complete description of the register contents.

ExCA register offset: CardBus socket address + 804h; Card A ExCA offset 04h
Register type: Read-only
Default value: 00h

BIT NUMBER	7	6	5	4	3	2	1	0
RESET STATE	0	0	0	0	0	0	0	0

Table 5−7. ExCA Card Status-Change Register Description

BIT	SIGNAL	TYPE	FUNCTION
7−4	RSVD	R	Reserved. Bits 7−4 return 0h when read.
3 †	CDCHANGE	R	Card detect change. Bit 3 indicates whether a change on $\overline{CD1}$ or $\overline{CD2}$ occurred at the PC Card interface. This bit is encoded as: 0 = No change detected on either $\overline{CD1}$ or $\overline{CD2}$ 1 = Change detected on either $\overline{CD1}$ or $\overline{CD2}$
2 †	READYCHANGE	R	Ready change. When a 16-bit memory is installed in the socket, bit 2 includes whether the source of a PCIxx12 interrupt was due to a change on READY at the PC Card interface, indicating that the PC Card is now ready to accept new data. This bit is encoded as: 0 = No low-to-high transition detected on READY (default) 1 = Detected low-to-high transition on READY When a 16-bit I/O card is installed, bit 2 is always 0b.
1 †	BATWARN	R	Battery warning change. When a 16-bit memory card is installed in the socket, bit 1 indicates whether the source of a PCIxx12 interrupt was due to a battery-low warning condition. This bit is encoded as: 0 = No battery warning condition (default) 1 = Detected battery warning condition When a 16-bit I/O card is installed, bit 1 is always 0b.
0 †	BATDEAD	R	Battery dead or status change. When a 16-bit memory card is installed in the socket, bit 0 indicates whether the source of a PCIxx12 interrupt was due to a battery dead condition. This bit is encoded as: 0 = $\overline{STSCHG}$ deasserted (default) 1 = $\overline{STSCHG}$ asserted Ring indicate. When the PCIxx12 is configured for ring indicate operation, bit 0 indicates the status of $\overline{RI}$.

† These are PME context bits and can be cleared only by the assertion of $\overline{GRST}$ when $\overline{PME}$ is enabled. If $\overline{PME}$ is not enabled, then these bits are cleared by the assertion of $\overline{PRST}$ or $\overline{GRST}$.

5.6 ExCA Card Status-Change Interrupt Configuration Register

This register controls interrupt routing for CSC interrupts, as well as masks/unmasks CSC interrupt sources. See Table 5−8 for a complete description of the register contents.

ExCA register offset: CardBus Socket Address + 805h: Card A ExCA Offset 05h
Register type: Read/Write
Default value: 00h

BIT NUMBER	7	6	5	4	3	2	1	0
RESET STATE	0	0	0	0	0	0	0	0

Table 5−8. ExCA Card Status-Change Interrupt Configuration Register Description

BIT	SIGNAL	TYPE	FUNCTION
7−4	CSCSELECT	RW	Interrupt select for card status change. These bits select the interrupt routing for card status-change interrupts. This field is encoded as: 0000 = CSC interrupts routed to PCI interrupts if bit 5 of the diagnostic register (PCI offset 93h) is set to 1b. In this case bit 4 of ExCA 803 is a don't care. This is the default setting. 0000 = No ISA interrupt routing if bit 5 of the diagnostic register (PCI offset 93h) is set to 0b. In this case, CSC interrupts are routed to PCI interrupts by setting bit 4 of ExCA 803h to 1b. 0001 = IRQ1 enabled 0010 = SMI enabled 0011 = IRQ3 enabled 0100 = IRQ4 enabled 0101 = IRQ5 enabled 0110 = IRQ6 enabled 0111 = IRQ7 enabled 1000 = IRQ8 enabled 1001 = IRQ9 enabled 1010 = IRQ10 enabled 1011 = IRQ11 enabled 1100 = IRQ12 enabled 1101 = IRQ13 enabled 1110 = IRQ14 enabled 1111 = IRQ15 enabled
3†	CDEN	RW	Card detect enable. Enables interrupts on CD1 or CD2 changes. This bit is encoded as: 0 = Disables interrupts on CD1 or CD2 line changes (default) 1 = Enables interrupts on CD1 or CD2 line changes
2†	READYEN	RW	Ready enable. This bit enables/disables a low-to-high transition on the PC Card READY signal to generate a host interrupt. This interrupt source is considered a card status change. This bit is encoded as: 0 = Disables host interrupt generation (default) 1 = Enables host interrupt generation
1†	BATWARNEN	RW	Battery warning enable. This bit enables/disables a battery warning condition to generate a CSC interrupt. This bit is encoded as: 0 = Disables host interrupt generation (default) 1 = Enables host interrupt generation
0†	BATDEADEN	RW	Battery dead enable. This bit enables/disables a battery dead condition on a memory PC Card or assertion of the $\overline{\text{STSCHG}}$ I/O PC Card signal to generate a CSC interrupt. 0 = Disables host interrupt generation (default) 1 = Enables host interrupt generation

† This bit is cleared only by the assertion of $\overline{\text{GRST}}$ when $\overline{\text{PME}}$ is enabled. If $\overline{\text{PME}}$ is not enabled, then this bit is cleared by the assertion of $\overline{\text{PRST}}$ or $\overline{\text{GRST}}$.

5.7 ExCA Address Window Enable Register

The ExCA address window enable register enables/disables the memory and I/O windows to the 16-bit PC Card. By default, all windows to the card are disabled. The controller does not acknowledge PCI memory or I/O cycles to the card if the corresponding enable bit in this register is 0b, regardless of the programming of the memory or I/O window start/end/offset address registers. See Table 5−9 for a complete description of the register contents.

ExCA register offset: CardBus socket address + 806h; Card A ExCA offset 06h
Register type: Read-only, Read/Write
Default value: 00h

BIT NUMBER	7	6	5	4	3	2	1	0
RESET STATE	0	0	0	0	0	0	0	0

Table 5−9. ExCA Address Window Enable Register Description

BIT	SIGNAL	TYPE	FUNCTION
7	IOWIN1EN	RW	I/O window 1 enable. Bit 7 enables/disables I/O window 1 for the PC Card. This bit is encoded as: 0 = I/O window 1 disabled (default) 1 = I/O window 1 enabled
6	IOWIN0EN	RW	I/O window 0 enable. Bit 6 enables/disables I/O window 0 for the PC Card. This bit is encoded as: 0 = I/O window 0 disabled (default) 1 = I/O window 0 enabled
5	RSVD	R	Reserved. Bit 5 returns 0b when read.
4	MEMWIN4EN	RW	Memory window 4 enable. Bit 4 enables/disables memory window 4 for the PC Card. This bit is encoded as: 0 = Memory window 4 disabled (default) 1 = Memory window 4 enabled
3	MEMWIN3EN	RW	Memory window 3 enable. Bit 3 enables/disables memory window 3 for the PC Card. This bit is encoded as: 0 = Memory window 3 disabled (default) 1 = Memory window 3 enabled
2	MEMWIN2EN	RW	Memory window 2 enable. Bit 2 enables/disables memory window 2 for the PC Card. This bit is encoded as: 0 = Memory window 2 disabled (default) 1 = Memory window 2 enabled
1	MEMWIN1EN	RW	Memory window 1 enable. Bit 1 enables/disables memory window 1 for the PC Card. This bit is encoded as: 0 = Memory window 1 disabled (default) 1 = Memory window 1 enabled
0	MEMWIN0EN	RW	Memory window 0 enable. Bit 0 enables/disables memory window 0 for the PC Card. This bit is encoded as: 0 = Memory window 0 disabled (default) 1 = Memory window 0 enabled

5.8 ExCA I/O Window Control Register

The ExCA I/O window control register contains parameters related to I/O window sizing and cycle timing. See Table 5−10 for a complete description of the register contents.

ExCA register offset: CardBus socket address + 807h: Card A ExCA offset 07h
Register type: Read/Write
Default value: 00h

BIT NUMBER	7	6	5	4	3	2	1	0
RESET STATE	0	0	0	0	0	0	0	0

Table 5−10. ExCA I/O Window Control Register Description

BIT	SIGNAL	TYPE	FUNCTION
7	WAITSTATE1	RW	I/O window 1 wait state. Bit 7 controls the I/O window 1 wait state for 16-bit I/O accesses. Bit 7 has no effect on 8-bit accesses. This wait-state timing emulates the ISA wait state used by the Intel 82365SL-DF. This bit is encoded as: 0 = 16-bit cycles have standard length (default). 1 = 16-bit cycles are extended by one equivalent ISA wait state.
6	ZEROWS1	RW	I/O window 1 zero wait state. Bit 6 controls the I/O window 1 wait state for 8-bit I/O accesses. Bit 6 has no effect on 16-bit accesses. This wait-state timing emulates the ISA wait state used by the Intel 82365SL-DF. This bit is encoded as: 0 = 8-bit cycles have standard length (default). 1 = 8-bit cycles are reduced to equivalent of three ISA cycles.
5	IOSIS16W1	RW	I/O window 1 $\overline{\text{IOIS16}}$ source. Bit 5 controls the I/O window 1 automatic data-sizing feature that uses $\overline{\text{IOIS16}}$ from the PC Card to determine the data width of the I/O data transfer. This bit is encoded as: 0 = Window data width determined by DATASIZE1, bit 4 (default). 1 = Window data width determined by $\overline{\text{IOIS16}}$.
4	DATASIZE1	RW	I/O window 1 data size. Bit 4 controls the I/O window 1 data size. Bit 4 is ignored if bit 5 (IOSIS16W1) is set. This bit is encoded as: 0 = Window data width is 8 bits (default). 1 = Window data width is 16 bits.
3	WAITSTATE0	RW	I/O window 0 wait state. Bit 3 controls the I/O window 0 wait state for 16-bit I/O accesses. Bit 3 has no effect on 8-bit accesses. This wait-state timing emulates the ISA wait state used by the Intel 82365SL-DF. This bit is encoded as: 0 = 16-bit cycles have standard length (default). 1 = 16-bit cycles are extended by one equivalent ISA wait state.
2	ZEROWS0	RW	I/O window 0 zero wait state. Bit 2 controls the I/O window 0 wait state for 8-bit I/O accesses. Bit 2 has no effect on 16-bit accesses. This wait-state timing emulates the ISA wait state used by the Intel 82365SL-DF. This bit is encoded as: 0 = 8-bit cycles have standard length (default). 1 = 8-bit cycles are reduced to equivalent of three ISA cycles.
1	IOSIS16W0	RW	I/O window 0 $\overline{\text{IOIS16}}$ source. Bit 1 controls the I/O window 0 automatic data sizing feature that uses $\overline{\text{IOIS16}}$ from the PC Card to determine the data width of the I/O data transfer. This bit is encoded as: 0 = Window data width is determined by DATASIZE0, bit 0 (default). 1 = Window data width is determined by $\overline{\text{IOIS16}}$.
0	DATASIZE0	RW	I/O window 0 data size. Bit 0 controls the I/O window 0 data size. Bit 0 is ignored if bit 1 (IOSIS16W0) is set. This bit is encoded as: 0 = Window data width is 8 bits (default). 1 = Window data width is 16 bits.

5.9 ExCA I/O Windows 0 and 1 Start-Address Low-Byte Registers

These registers contain the low byte of the 16-bit I/O window start address for I/O windows 0 and 1. The 8 bits of these registers correspond to the lower 8 bits of the start address.

Register: **ExCA I/O window 0 start-address low-byte**
ExCA register offset: CardBus Socket Address + 808h: Card A ExCA Offset 08h
Register: **ExCA I/O window 1 start-address low-byte**
ExCA register offset: CardBus Socket Address + 80Ch: Card A ExCA Offset 0Ch
Register type: Read/Write
Default value: 00h

BIT NUMBER	7	6	5	4	3	2	1	0
RESET STATE	0	0	0	0	0	0	0	0

5.10 ExCA I/O Windows 0 and 1 Start-Address High-Byte Registers

These registers contain the high byte of the 16-bit I/O window start address for I/O windows 0 and 1. The 8 bits of these registers correspond to the upper 8 bits of the start address.

Register: **ExCA I/O window 0 start-address high-byte**
ExCA register offset: CardBus Socket Address + 809h: Card A ExCA Offset 09h
Register: **ExCA I/O window 1 start-address high-byte**
ExCA register offset: CardBus Socket Address + 80Dh: Card A ExCA Offset 0Dh
Register type: Read/Write
Default value: 00h

BIT NUMBER	7	6	5	4	3	2	1	0
RESET STATE	0	0	0	0	0	0	0	0

5.11 ExCA I/O Windows 0 and 1 End-Address Low-Byte Registers

These registers contain the low byte of the 16-bit I/O window end address for I/O windows 0 and 1. The 8 bits of these registers correspond to the lower 8 bits of the start address.

Register: **ExCA I/O window 0 end-address low-byte**
ExCA register offset: CardBus Socket Address + 80Ah: Card A ExCA Offset 0Ah
Register: **ExCA I/O window 1 end-address low-byte**
ExCA register offset: CardBus Socket Address + 80Eh: Card A ExCA Offset 0Eh
Register type: Read/Write
Default value: 00h

BIT NUMBER	7	6	5	4	3	2	1	0
RESET STATE	0	0	0	0	0	0	0	0

5.12 ExCA I/O Windows 0 and 1 End-Address High-Byte Registers

These registers contain the high byte of the 16-bit I/O window end address for I/O windows 0 and 1. The 8 bits of these registers correspond to the upper 8 bits of the end address.

Register: **ExCA I/O window 0 end-address high-byte**
ExCA register offset: CardBus Socket Address + 80Bh: Card A ExCA Offset 0Bh
Register: **ExCA I/O window 1 end-address high-byte**
ExCA register offset: CardBus Socket Address + 80Fh: Card A ExCA Offset 0Fh
Register type: Read/Write
Default value: 00h

BIT NUMBER	7	6	5	4	3	2	1	0
RESET STATE	0	0	0	0	0	0	0	0

5.13 ExCA Memory Windows 0−4 Start-Address Low-Byte Registers

These registers contain the low byte of the 16-bit memory window start address for memory windows 0, 1, 2, 3, and 4. The 8 bits of these registers correspond to bits A19−A12 of the start address.

Register: **ExCA memory window 0 start-address low-byte**
ExCA register offset: CardBus Socket Address + 810h: Card A ExCA Offset 10h
Register: **ExCA memory window 1 start-address low-byte**
ExCA register offset: CardBus Socket Address + 818h: Card A ExCA Offset 18h
Register: **ExCA memory window 2 start-address low-byte**
ExCA register offset: CardBus Socket Address + 820h: Card A ExCA Offset 20h
Register: **ExCA memory window 3 start-address low-byte**
ExCA register offset: CardBus Socket Address + 828h: Card A ExCA Offset 28h
Register: **ExCA memory window 4 start-address low-byte**
ExCA register offset: CardBus Socket Address + 830h: Card A ExCA Offset 30h
Register type: Read/Write
Default value: 00h

BIT NUMBER	7	6	5	4	3	2	1	0
RESET STATE	0	0	0	0	0	0	0	0

5.14 ExCA Memory Windows 0−4 Start-Address High-Byte Registers

These registers contain the high nibble of the 16-bit memory window start address for memory windows 0, 1, 2, 3, and 4. The lower 4 bits of these registers correspond to bits A23−A20 of the start address. In addition, the memory window data width and wait states are set in this register. See Table 5−11 for a complete description of the register contents.

Register: **ExCA memory window 0 start-address high-byte**
ExCA register offset: CardBus Socket Address + 811h: Card A ExCA Offset 11h
Register: **ExCA memory window 1 start-address high-byte**
ExCA register offset: CardBus Socket Address + 819h: Card A ExCA Offset 19h
Register: **ExCA memory window 2 start-address high-byte**
ExCA register offset: CardBus Socket Address + 821h: Card A ExCA Offset 21h
Register: **ExCA memory window 3 start-address high-byte**
ExCA register offset: CardBus Socket Address + 829h: Card A ExCA Offset 29h
Register: **ExCA memory window 4 start-address high-byte**
ExCA register offset: CardBus Socket Address + 831h: Card A ExCA Offset 31h
Register type: Read/Write
Default value: 00h

BIT NUMBER	7	6	5	4	3	2	1	0
RESET STATE	0	0	0	0	0	0	0	0

Table 5−11. ExCA Memory Windows 0−4 Start-Address High-Byte Registers Description

BIT	SIGNAL	TYPE	FUNCTION
7	DATASIZE	RW	This bit controls the memory window data width. This bit is encoded as: 0 = Window data width is 8 bits (default) 1 = Window data width is 16 bits
6	ZEROWAIT	RW	Zero wait-state. This bit controls the memory window wait state for 8- and 16-bit accesses. This wait-state timing emulates the ISA wait state used by the 82365SL-DF. This bit is encoded as: 0 = 8- and 16-bit cycles have standard length (default). 1 = 8-bit cycles reduced to equivalent of three ISA cycles 16-bit cycles reduced to the equivalent of two ISA cycles
5−4	SCRATCH	RW	Scratch pad bits. These bits have no effect on memory window operation.
3−0	STAHN	RW	Start address high-nibble. These bits represent the upper address bits A23−A20 of the memory window start address.

5.15 ExCA Memory Windows 0−4 End-Address Low-Byte Registers

These registers contain the low byte of the 16-bit memory window end address for memory windows 0, 1, 2, 3, and 4. The 8 bits of these registers correspond to bits A19−A12 of the end address.

Register: **ExCA memory window 0 end-address low-byte**
ExCA register offset: CardBus Socket Address + 812h: Card A ExCA Offset 12h
Register: **ExCA memory window 1 end-address low-byte**
ExCA register offset: CardBus Socket Address + 81Ah: Card A ExCA Offset 1Ah
Register: **ExCA memory window 2 end-address low-byte**
ExCA register offset: CardBus Socket Address + 822h: Card A ExCA Offset 22h
Register: **ExCA memory window 3 end-address low-byte**
ExCA register offset: CardBus Socket Address + 82Ah: Card A ExCA Offset 2Ah
Register: **ExCA memory window 4 end-address low-byte**
ExCA register offset: CardBus Socket Address + 832h: Card A ExCA Offset 32h
Register type: Read/Write
Default value: 00h

BIT NUMBER	7	6	5	4	3	2	1	0
RESET STATE	0	0	0	0	0	0	0	0

5.16 ExCA Memory Windows 0−4 End-Address High-Byte Registers

These registers contain the high nibble of the 16-bit memory window end address for memory windows 0, 1, 2, 3, and 4. The lower 4 bits of these registers correspond to bits A23−A20 of the end address. In addition, the memory window wait states are set in this register. See Table 5−12 for a complete description of the register contents.

Register: **ExCA memory window 0 end-address high-byte**
ExCA register offset: CardBus Socket Address + 813h: Card A ExCA Offset 13h
Register: **ExCA memory window 1 end-address high-byte**
ExCA register offset: CardBus Socket Address + 81Bh: Card A ExCA Offset 1Bh
Register: **ExCA memory window 2 end-address high-byte**
ExCA register offset: CardBus Socket Address + 823h: Card A ExCA Offset 23h
Register: **ExCA memory window 3 end-address high-byte**
ExCA register offset: CardBus Socket Address + 82Bh: Card A ExCA Offset 2Bh
Register: **ExCA Memory window 4 end-address high-byte**
ExCA register offset: CardBus Socket Address + 833h: Card A ExCA Offset 33h
Register type: Read/Write, Read-only
Default value: 00h

BIT NUMBER	7	6	5	4	3	2	1	0
RESET STATE	0	0	0	0	0	0	0	0

Table 5−12. ExCA Memory Windows 0−4 End-Address High-Byte Registers Description

BIT	SIGNAL	TYPE	FUNCTION
7−6	MEMWS	RW	Wait state. These bits specify the number of equivalent ISA wait states to be added to 16-bit memory accesses. The number of wait states added is equal to the binary value of these 2 bits.
5−4	RSVD	R	Reserved. These bits return 00b when read. Writes have no effect.
3−0	ENDHN	RW	End-address high nibble. These bits represent the upper address bits A23−A20 of the memory window end address.

5.17 ExCA Memory Windows 0−4 Offset-Address Low-Byte Registers

These registers contain the low byte of the 16-bit memory window offset address for memory windows 0, 1, 2, 3, and 4. The 8 bits of these registers correspond to bits A19−A12 of the offset address.

Register: **ExCA memory window 0 offset-address low-byte**
ExCA register offset: CardBus Socket Address + 814h: Card A ExCA Offset 14h
Register: **ExCA memory window 1 offset-address low-byte**
ExCA register offset: CardBus Socket Address + 81Ch: Card A ExCA Offset 1Ch
Register: **ExCA memory window 2 offset-address low-byte**
ExCA register offset: CardBus Socket Address + 824h: Card A ExCA Offset 24h
Register: **ExCA memory window 3 offset-address low-byte**
ExCA register offset: CardBus Socket Address + 82Ch: Card A ExCA Offset 2Ch
Register: **ExCA memory window 4 offset-address low-byte**
ExCA register offset: CardBus Socket Address + 834h: Card A ExCA Offset 34h
Register type: Read/Write
Default value: 00h

BIT NUMBER	7	6	5	4	3	2	1	0
RESET STATE	0	0	0	0	0	0	0	0

5.18 ExCA Memory Windows 0−4 Offset-Address High-Byte Registers

These registers contain the high 6 bits of the 16-bit memory window offset address for memory windows 0, 1, 2, 3, and 4. The lower 6 bits of these registers correspond to bits A25−A20 of the offset address. In addition, the write protection and common/attribute memory configurations are set in this register. See Table 5−13 for a complete description of the register contents.

Register: **ExCA memory window 0 offset-address high-byte**
ExCA register offset: CardBus Socket Address + 815h: Card A ExCA Offset 15h
Register: **ExCA memory window 1 offset-address high-byte**
ExCA register offset: CardBus Socket Address + 81Dh: Card A ExCA Offset 1Dh
Register: **ExCA memory window 2 offset-address high-byte**
ExCA register offset: CardBus Socket Address + 825h: Card A ExCA Offset 25h
Register: **ExCA memory window 3 offset-address high-byte**
ExCA register offset: CardBus Socket Address + 82Dh: Card A ExCA Offset 2Dh
Register: **ExCA memory window 4 offset-address high-byte**
ExCA register offset: CardBus Socket Address + 835h: Card A ExCA Offset 35h
Register type: Read/Write
Default value: 00h

BIT NUMBER	7	6	5	4	3	2	1	0
RESET STATE	0	0	0	0	0	0	0	0

Table 5−13. ExCA Memory Windows 0−4 Offset-Address High-Byte Registers Description

BIT	SIGNAL	TYPE	FUNCTION
7	WINWP	RW	Write protect. This bit specifies whether write operations to this memory window are enabled. This bit is encoded as: 0 = Write operations are allowed (default). 1 = Write operations are not allowed.
6	REG	RW	This bit specifies whether this memory window is mapped to card attribute or common memory. This bit is encoded as: 0 = Memory window is mapped to common memory (default). 1 = Memory window is mapped to attribute memory.
5−0	OFFHB	RW	Offset-address high byte. These bits represent the upper address bits A25−A20 of the memory window offset address.

5.19 ExCA Card Detect and General Control Register

This register controls how the ExCA registers for the socket respond to card removal. It also reports the status of the $\overline{VS1}$ and $\overline{VS2}$ signals at the PC Card interface. Table 5−14 describes each bit in the ExCA card detect and general control register.

ExCA register offset: CardBus Socket Address + 816h: Card A ExCA Offset 16h
Register type: Read-only, Write-only, Read/Write
Default value: XX00 0000b

BIT NUMBER	7	6	5	4	3	2	1	0
RESET STATE	X	X	0	0	0	0	0	0

Table 5−14. ExCA Card Detect and General Control Register Description

BIT	SIGNAL	TYPE	FUNCTION
7 †	VS2STAT	R	VS2. This bit reports the current state of the $\overline{VS2}$ signal at the PC Card interface, and, therefore, does not have a default value. 0 = $\overline{VS2}$ is low. 1 = $\overline{VS2}$ is high.
6 †	VS1STAT	R	VS1. This bit reports the current state of the $\overline{VS1}$ signal at the PC Card interface, and, therefore, does not have a default value. 0 = $\overline{VS1}$ is low. 1 = $\overline{VS1}$ is high.
5	SWCSC	W	Software card detect interrupt. If card detect enable, bit 3 in the ExCA card status change interrupt configuration register (ExCA offset 805h, see Section 5.6) is set, then writing a 1b to this bit causes a card-detect card-status-change interrupt for the associated card socket. If the card-detect enable bit is cleared to 0b in the ExCA card status-change interrupt configuration register (ExCA offset 805h, see Section 5.6), then writing a 1b to the software card-detect interrupt bit has no effect. This bit is write-only. A read operation of this bit always returns 0b. Writing a 1b to this bit also clears it. If bit 2 of the ExCA global control register (ExCA offset 81Eh, see Section 5.20) is set and a 1b is written to clear bit 3 of the ExCA card status change interrupt register, then this bit also is cleared.
4	CDRESUME	RW	Card detect resume enable. If this bit is set to 1b and a card detect change has been detected on the $\overline{CD1}$ and $\overline{CD2}$ inputs, then the $\overline{RI_OUT}$ output goes from high to low. The $\overline{RI_OUT}$ remains low until the card status change bit in the ExCA card status-change register (ExCA offset 804h, see Section 5.5) is cleared. If this bit is 0b, then the card detect resume functionality is disabled. 0 = Card detect resume disabled (default) 1 = Card detect resume enabled
3−2	RSVD	R	These bits return 00b when read. Writes have no effect.
1	REGCONFIG	RW	Register configuration upon card removal. This bit controls how the ExCA registers for the socket react to a card removal event. This bit is encoded as: 0 = No change to ExCA registers upon card removal (default) 1 = Reset ExCA registers upon card removal
0	RSVD	R	This bit returns 0b when read. A write has no effect.

† One or more bits in this register are cleared only by the assertion of $\overline{GRST}$ when $\overline{PME}$ is enabled. If $\overline{PME}$ is not enabled, then this bit is cleared by the assertion of $\overline{PRST}$ or $\overline{GRST}$.

5.20 ExCA Global Control Register

This register controls both PC Card sockets, and is not duplicated for each socket. The host interrupt mode bits in this register are retained for 82365SL-DF compatibility. See Table 5−15 for a complete description of the register contents.

ExCA register offset: CardBus Socket Address + 81Eh: Card A ExCA Offset 1Eh
Register type: Read-only, Read/Write
Default value: 00h

BIT NUMBER	7	6	5	4	3	2	1	0
RESET STATE	0	0	0	0	0	0	0	0

Table 5−15. ExCA Global Control Register Description

BIT	SIGNAL	TYPE	FUNCTION
7−5	RSVD	R	These bits return 000b when read. Writes have no effect.
4	INTMODEB	RW	Level/edge interrupt mode select, card B. This bit selects the signaling mode for the PCIxx12 host interrupt for card B interrupts. This bit is encoded as: 0 = Host interrupt is edge mode (default). 1 = Host interrupt is level mode.
3	INTMODEA	RW	Level/edge interrupt mode select, card A. This bit selects the signaling mode for the PCIxx12 host interrupt for card A interrupts. This bit is encoded as: 0 = Host interrupt is edge-mode (default). 1 = Host interrupt is level-mode.
2 ‡	IFCMODE	RW	Interrupt flag clear mode select. This bit selects the interrupt flag clear mechanism for the flags in the ExCA card status change register. This bit is encoded as: 0 = Interrupt flags cleared by read of CSC register (default) 1 = Interrupt flags cleared by explicit writeback of 1
1 ‡	CSCMODE	RW	Card status change level/edge mode select. This bit selects the signaling mode for the PCIxx12 host interrupt for card status changes. This bit is encoded as: 0 = Host interrupt is edge-mode (default). 1 = Host interrupt is level-mode.
0 ‡	PWRDWN	RW	Power-down mode select. When this bit is set to 1b, the controller is in power-down mode. In power-down mode the PCIxx12 card outputs are placed in a high-impedance state until an active cycle is executed on the card interface. Following an active cycle the outputs are again placed in a high-impedance state. The controller still receives functional interrupts and/or card status change interrupts; however, an actual card access is required to wake up the interface. This bit is encoded as: 0 = Power-down mode disabled (default) 1 = Power-down mode enabled

‡ One or more bits in this register are cleared only by the assertion of $\overline{\text{GRST}}$.

5.21 ExCA I/O Windows 0 and 1 Offset-Address Low-Byte Registers

These registers contain the low byte of the 16-bit I/O window offset address for I/O windows 0 and 1. The 8 bits of these registers correspond to the lower 8 bits of the offset address, and bit 0 is always 0b.

Register: **ExCA I/O window 0 offset-address low-byte**
ExCA register offset: CardBus Socket Address + 836h: Card A ExCA Offset 36h
Register: **ExCA I/O window 1 offset-address low-byte**
ExCA register offset: CardBus Socket Address + 838h: Card A ExCA Offset 38h
Register type: Read/Write, Read-only
Default value: 00h

BIT NUMBER	7	6	5	4	3	2	1	0
RESET STATE	0	0	0	0	0	0	0	0

5.22 ExCA I/O Windows 0 and 1 Offset-Address High-Byte Registers

These registers contain the high byte of the 16-bit I/O window offset address for I/O windows 0 and 1. The 8 bits of these registers correspond to the upper 8 bits of the offset address.

Register: **ExCA I/O window 0 offset-address high-byte**
ExCA register offset: CardBus Socket Address + 837h: Card A ExCA Offset 37h
Register: **ExCA I/O window 1 offset-address high-byte**
ExCA register offset: CardBus Socket Address + 839h: Card A ExCA Offset 39h
Register type: Read/Write
Default value: 00h

BIT NUMBER	7	6	5	4	3	2	1	0
RESET STATE	0	0	0	0	0	0	0	0

5.23 ExCA Memory Windows 0−4 Page Registers

The upper 8 bits of a 4-byte PCI memory address are compared to the contents of this register when decoding addresses for 16-bit memory windows. Each window has its own page register, all of which default to 00h. By programming this register to a nonzero value, host software can locate 16-bit memory windows in any one of 256 16-Mbyte regions in the 4-gigabyte PCI address space. These registers are only accessible when the ExCA registers are memory-mapped, that is, these registers may not be accessed using the index/data I/O scheme.

ExCA register offset: CardBus Socket Address + 840h, 841h, 842h, 843h, 844h
Register type: Read/Write
Default value: 00h

BIT NUMBER	7	6	5	4	3	2	1	0
RESET STATE	0	0	0	0	0	0	0	0

6 CardBus Socket Registers (Function 0)

The *1997 PC Card Standard* requires a CardBus socket controller to provide five 32-bit registers that report and control socket-specific functions. The PCIxx12 controller provides the CardBus socket/ExCA base address register (PCI offset 10h, see Section 4.12) to locate these CardBus socket registers in PCI memory address space. Table 6−1 gives the location of the socket registers in relation to the CardBus socket/ExCA base address.

In addition to the five required registers, the controller implements a register at offset 20h that provides power management control for the socket.

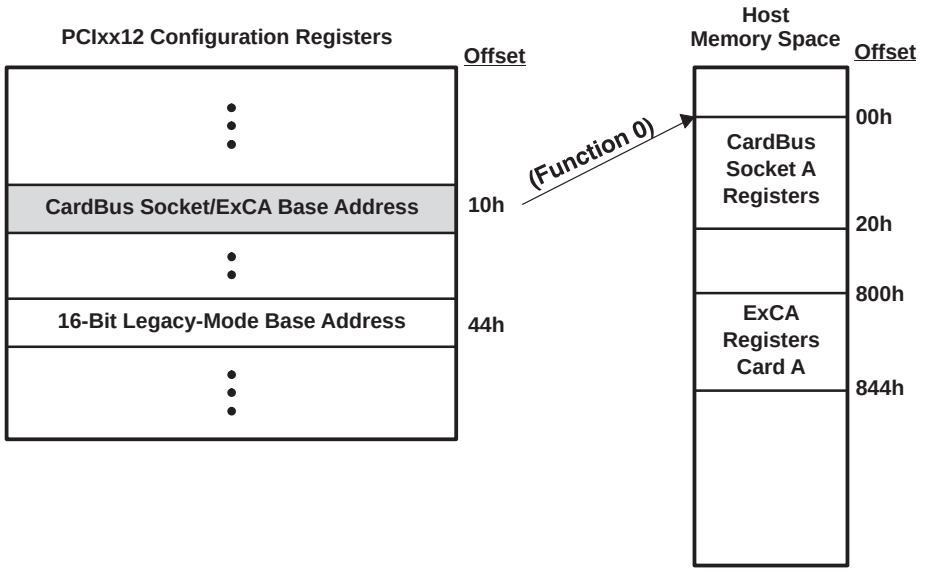

Offsets are from the CardBus socket/ExCA base address register's base address.

Figure 6−1. Accessing CardBus Socket Registers Through PCI Memory

Table 6−1. CardBus Socket Registers

REGISTER NAME	OFFSET
Socket event †	00h
Socket mask †	04h
Socket present state †	08h
Socket force event	0Ch
Socket control †	10h
Reserved	14h−1Ch
Socket power management ‡	20h

† One or more bits in the register are PME context bits and can be cleared only by the assertion of $\overline{\text{GRST}}$ when $\overline{\text{PME}}$ is enabled. If $\overline{\text{PME}}$ is not enabled, then these bits are cleared by the assertion of $\overline{\text{PRST}}$ or $\overline{\text{GRST}}$.

‡ One or more bits in this register are cleared only by the assertion of $\overline{\text{GRST}}$.

6.1 Socket Event Register

This register indicates a change in socket status has occurred. These bits do not indicate what the change is, only that one has occurred. Software must read the socket present state register for current status. Each bit in this register can be cleared by writing 1b to that bit. The bits in this register can be set to 1b by software through writing 1b to the corresponding bit in the socket force event register. All bits in this register are cleared by PCI reset. They can be immediately set again, if, when coming out of PC Card reset, the bridge finds the status unchanged (i.e., CSTSCHG reasserted or card detect is still true). Software needs to clear this register before enabling interrupts. If it is not cleared and interrupts are enabled, then an unmasked interrupt is generated based on any bit that is set. See Table 6−2 for a complete description of the register contents.

CardBus register offset: CardBus Socket Address + 00h
Register type: Read-only, Read/Write to Clear
Default value: 0000 0000h

BIT NUMBER	31	30	29	28	27	26	25	24	23	22	21	20	19	18	17	16
RESET STATE	0	0	0	0	0	0	0	0	0	0	0	0	0	0	0	0
BIT NUMBER	**15**	**14**	**13**	**12**	**11**	**10**	**9**	**8**	**7**	**6**	**5**	**4**	**3**	**2**	**1**	**0**
RESET STATE	0	0	0	0	0	0	0	0	0	0	0	0	0	0	0	0

Table 6−2. Socket Event Register Description

BIT	SIGNAL	TYPE	FUNCTION
31−4	RSVD	R	These bits return 000 0000h when read.
3†	PWREVENT	RWC	Power cycle. This bit is set when the controller detects that the PWRCYCLE bit in the socket present state register (offset 08h, see Section 6.3) has changed. This bit is cleared by writing 1b.
2†	CD2EVENT	RWC	$\overline{\text{CCD2}}$. This bit is set when the controller detects that the CDETECT2 field in the socket present state register (offset 08h, see Section 6.3) has changed. This bit is cleared by writing 1b.
1†	CD1EVENT	RWC	$\overline{\text{CCD1}}$. This bit is set when the controller detects that the CDETECT1 field in the socket present state register (offset 08h, see Section 6.3) has changed. This bit is cleared by writing 1b.
0†	CSTSEVENT	RWC	CSTSCHG. This bit is set when the CARDSTS field in the socket present state register (offset 08h, see Section 6.3) has changed state. For CardBus cards, this bit is set on the rising edge of the CSTSCHG signal. For 16-bit PC Cards, this bit is set on both transitions of the CSTSCHG signal. This bit is reset by writing 1b.

† This bit is cleared only by the assertion of $\overline{\text{GRST}}$ when $\overline{\text{PME}}$ is enabled. If $\overline{\text{PME}}$ is not enabled, then this bit is cleared by the assertion of $\overline{\text{PRST}}$ or $\overline{\text{GRST}}$.

6.2 Socket Mask Register

This register allows software to control the CardBus card events which generate a status change interrupt. The state of these mask bits does not prevent the corresponding bits from reacting in the socket event register (offset 00h, see Section 6.1). See Table 6−3 for a complete description of the register contents.

CardBus register offset: CardBus Socket Address + 04h
Register type: Read-only, Read/Write
Default value: 0000 0000h

BIT NUMBER	31	30	29	28	27	26	25	24	23	22	21	20	19	18	17	16
RESET STATE	0	0	0	0	0	0	0	0	0	0	0	0	0	0	0	0
BIT NUMBER	**15**	**14**	**13**	**12**	**11**	**10**	**9**	**8**	**7**	**6**	**5**	**4**	**3**	**2**	**1**	**0**
RESET STATE	0	0	0	0	0	0	0	0	0	0	0	0	0	0	0	0

Table 6−3. Socket Mask Register Description

BIT	SIGNAL	TYPE	FUNCTION
31−4	RSVD	R	These bits return 000 0000h when read.
3†	PWRMASK	RW	Power cycle. This bit masks the PWRCYCLE bit in the socket present state register (offset 08h, see Section 6.3) from causing a status change interrupt. 0 = PWRCYCLE event does not cause a CSC interrupt (default). 1 = PWRCYCLE event causes a CSC interrupt.
2−1†	CDMASK	RW	Card detect mask. These bits mask the CDETECT1 and CDETECT2 bits in the socket present state register (offset 08h, see Section 6.3) from causing a CSC interrupt. 00 = Insertion/removal does not cause a CSC interrupt (default). 01 = Reserved (undefined) 10 = Reserved (undefined) 11 = Insertion/removal causes a CSC interrupt.
0†	CSTSMASK	RW	CSTSCHG mask. This bit masks the CARDSTS field in the socket present state register (offset 08h, see Section 6.3) from causing a CSC interrupt. 0 = CARDSTS event does not cause a CSC interrupt (default). 1 = CARDSTS event causes a CSC interrupt.

† This bit is cleared only by the assertion of $\overline{GRST}$ when $\overline{PME}$ is enabled. If $\overline{PME}$ is not enabled, then this bit is cleared by the assertion of $\overline{PRST}$ or $\overline{GRST}$.

6.3 Socket Present State Register

This register reports information about the socket interface. Writes to the socket force event register (offset 0Ch, see Section 6.4), as well as general socket interface status, are reflected here. Information about PC Card V_{CC} support and card type is only updated at each insertion. Also note that the PCIxx12 controller uses the $\overline{CCD1}$ and $\overline{CCD2}$ signals during card identification, and changes on these signals during this operation are not reflected in this register.

CardBus register offset: CardBus Socket Address + 08h
Register type: Read-only
Default value: 3000 00XXh

BIT NUMBER	31	30	29	28	27	26	25	24	23	22	21	20	19	18	17	16
RESET STATE	0	0	1	1	0	0	0	0	0	0	0	0	0	0	0	0
BIT NUMBER	**15**	**14**	**13**	**12**	**11**	**10**	**9**	**8**	**7**	**6**	**5**	**4**	**3**	**2**	**1**	**0**
RESET STATE	0	0	0	0	0	0	0	0	0	X	0	0	0	X	X	X

Table 6−4. Socket Present State Register Description

BIT	SIGNAL	TYPE	FUNCTION
31	YVSOCKET	R	YV socket. This bit indicates whether or not the socket can supply V_{CC} = Y.Y V to PC Cards. The controller does not support Y.Y-V V_{CC}; therefore, this bit is always reset unless overridden by the socket force event register (offset 0Ch, see Section 6.4). This bit defaults to 0b.
30	XVSOCKET	R	XV socket. This bit indicates whether or not the socket can supply V_{CC} = X.X V to PC Cards. The controller does not support X.X-V V_{CC}; therefore, this bit is always reset unless overridden by the socket force event register (offset 0Ch, see Section 6.4). This bit defaults to 0b.
29	3VSOCKET	R	3-V socket. This bit indicates whether or not the socket can supply V_{CC} = 3.3 Vdc to PC Cards. The controller does support 3.3-V V_{CC}; therefore, this bit is always set unless overridden by the socket force event register (offset 0Ch, see Section 6.4).
28	5VSOCKET	R	5-V socket. This bit indicates whether or not the socket can supply V_{CC} = 5 Vdc to PC Cards. The PCI712 controller does support 5-V V_{CC}; therefore, this bit is always set unless overridden by bit 6 of the device control register (PCI offset 92h, see Section 4.38).
27−14	RSVD	R	These bits return 0s when read.
13 †	YVCARD	R	YV card. This bit indicates whether or not the PC Card inserted in the socket supports V_{CC} = Y.Y Vdc. This bit can be set by writing a 1b to the corresponding bit in the socket force event register (offset 0Ch, see Section 6.4).
12 †	XVCARD	R	XV card. This bit indicates whether or not the PC Card inserted in the socket supports V_{CC} = X.X Vdc. This bit can be set by writing a 1b to the corresponding bit in the socket force event register (offset 0Ch, see Section 6.4).
11 †	3VCARD	R	3-V card. This bit indicates whether or not the PC Card inserted in the socket supports V_{CC} = 3.3 Vdc. This bit can be set by writing a 1b to the corresponding bit in the socket force event register (offset 0Ch, see Section 6.4).
10 †	5VCARD	R	5-V card. This bit indicates whether or not the PC Card inserted in the socket supports V_{CC} = 5 Vdc. This bit can be set by writing a 1b to the corresponding bit in the socket force event register (offset 0Ch, see Section 6.4).
9 †	BADVCCREQ	R	Bad V_{CC} request. This bit indicates that the host software has requested that the socket be powered at an invalid voltage. 0 = Normal operation (default) 1 = Invalid V_{CC} request by host software
8 †	DATALOST	R	Data lost. This bit indicates that a PC Card removal event may have caused lost data because the cycle did not terminate properly or because write data still resides in the controller. 0 = Normal operation (default) 1 = Potential data loss due to card removal

† One or more bits in the register are PME context bits and can be cleared only by the assertion of $\overline{GRST}$ when $\overline{PME}$ is enabled. If $\overline{PME}$ is not enabled, then these bits are cleared by the assertion of $\overline{PRST}$ or $\overline{GRST}$.

Table 6−4. Socket Present State Register Description (Continued)

BIT	SIGNAL	TYPE	FUNCTION
7 †	NOTACARD	R	Not a card. This bit indicates that an unrecognizable PC Card has been inserted in the socket. This bit is not updated until a valid PC Card is inserted into the socket. 0 = Normal operation (default) 1 = Unrecognizable PC Card detected

6	IREQCINT	R	READY($\overline{\text{IREQ}}$)//$\overline{\text{CINT}}$. This bit indicates the current status of the READY($\overline{\text{IREQ}}$)//$\overline{\text{CINT}}$ signal at the PC Card interface.
			0 = READY($\overline{\text{IREQ}}$)//$\overline{\text{CINT}}$ is low.
			1 = READY($\overline{\text{IREQ}}$)//$\overline{\text{CINT}}$ is high.

5 †	CBCARD	R	CardBus card detected. This bit indicates that a CardBus PC Card is inserted in the socket. This bit is not updated until another card interrogation sequence occurs (card insertion).
4 †	16BITCARD	R	16-bit card detected. This bit indicates that a 16-bit PC Card is inserted in the socket. This bit is not updated until another card interrogation sequence occurs (card insertion).
3 †	PWRCYCLE	R	Power cycle. This bit indicates the status of each card powering request. This bit is encoded as: 0 = Socket is powered down (default). 1 = Socket is powered up.
2 †	CDETECT2	R	$\overline{\text{CCD2}}$. This bit reflects the current status of the $\overline{\text{CCD2}}$ signal at the PC Card interface. Changes to this signal during card interrogation are not reflected here. 0 = $\overline{\text{CCD2}}$ is low (PC Card may be present) 1 = $\overline{\text{CCD2}}$ is high (PC Card not present)
1 †	CDETECT1	R	$\overline{\text{CCD1}}$. This bit reflects the current status of the $\overline{\text{CCD1}}$ signal at the PC Card interface. Changes to this signal during card interrogation are not reflected here. 0 = $\overline{\text{CCD1}}$ is low (PC Card may be present). 1 = $\overline{\text{CCD1}}$ is high (PC Card not present).
0	CARDSTS	R	CSTSCHG. This bit reflects the current status of the CSTSCHG signal at the PC Card interface. 0 = CSTSCHG is low. 1 = CSTSCHG is high.

† One or more bits in the register are PME context bits and can be cleared only by the assertion of $\overline{\text{GRST}}$ when $\overline{\text{PME}}$ is enabled. If $\overline{\text{PME}}$ is not enabled, then these bits are cleared by the assertion of $\overline{\text{PRST}}$ or $\overline{\text{GRST}}$.

6.4 Socket Force Event Register

This register forces changes to the socket event register (offset 00h, see Section 6.1) and the socket present state register (offset 08h, see Section 6.3). The CVSTEST bit (bit 14) in this register must be written when forcing changes that require card interrogation. See Table 6−5 for a complete description of the register contents.

CardBus register offset: CardBus Socket Address + 0Ch
Register type: Read-only, Write-only
Default value: 0000 XXXXh

BIT NUMBER	31	30	29	28	27	26	25	24	23	22	21	20	19	18	17	16
RESET STATE	0	0	0	0	0	0	0	0	0	0	0	0	0	0	0	0
BIT NUMBER	**15**	**14**	**13**	**12**	**11**	**10**	**9**	**8**	**7**	**6**	**5**	**4**	**3**	**2**	**1**	**0**
RESET STATE	X	X	X	X	X	X	X	X	X	X	X	X	X	X	X	X

Table 6−5. Socket Force Event Register Description

BIT	SIGNAL	TYPE	FUNCTION
31−15	RSVD	R	Reserved. These bits return 0s when read.
14	CVSTEST	W	Card VS test. When this bit is set, the PCIxx12 controller reinterrogates the PC Card, updates the socket present state register (offset 08h, see Section 6.3), and re-enables the socket power control.
13	FYVCARD	W	Force YV card. Writes to this bit cause the YVCARD bit in the socket present state register (offset 08h, see Section 6.3) to be written. When set, this bit disables the socket power control.
12	FXVCARD	W	Force XV card. Writes to this bit cause the XVCARD bit in the socket present state register (offset 08h, see Section 6.3) to be written. When set, this bit disables the socket power control.
11	F3VCARD	W	Force 3-V card. Writes to this bit cause the 3VCARD bit in the socket present state register (offset 08h, see Section 6.3) to be written. When set, this bit disables the socket power control.
10	F5VCARD	W	Force 5-V card. Writes to this bit cause the 5VCARD bit in the socket present state register (offset 08h, see Section 6.3) to be written. When set, this bit disables the socket power control.
9	FBADVCCREQ	W	Force BadVccReq. Changes to the BADVCCREQ bit in the socket present state register (offset 08h, see Section 6.3) can be made by writing this bit.
8	FDATALOST	W	Force data lost. Writes to this bit cause the DATALOST bit in the socket present state register (offset 08h, see Section 6.3) to be written.
7	FNOTACARD	W	Force not a card. Writes to this bit cause the NOTACARD bit in the socket present state register (offset 08h, see Section 6.3) to be written.
6	RSVD	R	This bit returns 0b when read.
5	FCBCARD	W	Force CardBus card. Writes to this bit cause the CBCARD bit in the socket present state register (offset 08h, see Section 6.3) to be written.
4	F16BITCARD	W	Force 16-bit card. Writes to this bit cause the 16BITCARD bit in the socket present state register (offset 08h, see Section 6.3) to be written.
3	FPWRCYCLE	W	Force power cycle. Writes to this bit cause the PWREVENT bit in the socket event register (offset 00h, see Section 6.1) to be written, and the PWRCYCLE bit in the socket present state register (offset 08h, see Section 6.3) is unaffected.
2	FCDETECT2	W	Force $\overline{\text{CCD2}}$. Writes to this bit cause the CD2EVENT bit in the socket event register (offset 00h, see Section 6.1) to be written, and the CDETECT2 bit in the socket present state register (offset 08h, see Section 6.3) is unaffected.
1	FCDETECT1	W	Force $\overline{\text{CCD1}}$. Writes to this bit cause the CD1EVENT bit in the socket event register (offset 00h, see Section 6.1) to be written, and the CDETECT1 bit in the socket present state register (offset 08h, see Section 6.3) is unaffected.
0	FCARDSTS	W	Force CSTSCHG. Writes to this bit cause the CSTSEVENT bit in the socket event register (offset 00h, see Section 6.1) to be written. The CARDSTS bit in the socket present state register (offset 08h, see Section 6.3) is unaffected.

6.5 Socket Control Register

This register provides control of the voltages applied to the socket V_{PP} and V_{CC}. The PCIxx12 controller ensures that the socket is powered up only at acceptable voltages when a CardBus card is inserted. See Table 6−6 for a complete description of the register contents.

CardBus register offset: CardBus Socket Address + 10h
Register type: Read-only, Read/Write
Default value: 0000 0400h

BIT NUMBER	31	30	29	28	27	26	25	24	23	22	21	20	19	18	17	16
RESET STATE	0	0	0	0	0	0	0	0	0	0	0	0	0	0	0	0
BIT NUMBER	**15**	**14**	**13**	**12**	**11**	**10**	**9**	**8**	**7**	**6**	**5**	**4**	**3**	**2**	**1**	**0**
RESET STATE	0	0	0	0	0	1	0	0	0	0	0	0	0	0	0	0

Table 6−6. Socket Control Register Description

BIT	SIGNAL	TYPE	FUNCTION
31−11	RSVD	R	These bits return 0s when read.
10	RSVD	R	This bit returns 1b when read.
9−8	RSVD	R	These bits return 00b when read.
7	STOPCLK	RW	This bit controls how the CardBus clock run state machine decides when to stop the CardBus clock to the CardBus card: 0 = The CardBus $\overline{\text{CLKRUN}}$ protocol can only attempt to stop/slow the CaredBus clock if the sockethas been idle for 8 clocks and the PCI $\overline{\text{CLKRUN}}$ protocol is preparing to stop/slow the PCI bus clock. 1 = The CardBus $\overline{\text{CLKRUN}}$ protocol can only attempt to stop/slow the CaredBus clock if the socket has been idle for 8 clocks, regardless of the state of the PCI $\overline{\text{CLKRUN}}$ signal.
6−4 †	VCCCTRL	RW	V_{CC} control. These bits are used to request card V_{CC} changes. 000 = Request power off (default) 001 = Reserved 010 = Request V_{CC} = 5 V 011 = Request V_{CC} = 3.3 V 100 = Request V_{CC} = X.X V 101 = Request V_{CC} = Y.Y V 110 = Reserved 111 = Reserved
3	RSVD	R	This bit returns 0b when read.
2−0 †	VPPCTRL	RW	V_{PP} control. These bits request card V_{PP} changes. 000 = Request power off (default) 001 = Request V_{PP} = 12 V 010 = Request V_{PP} = 5 V 011 = Request V_{PP} = 3.3 V 100 = Request V_{PP} = X.X V 101 = Request V_{PP} = Y.Y V 110 = Reserved 111 = Reserved

† One or more bits in the register are PME context bits and can be cleared only by the assertion of $\overline{\text{GRST}}$ when $\overline{\text{PME}}$ is enabled. If $\overline{\text{PME}}$ is not enabled, then this bit is cleared by the assertion of $\overline{\text{PRST}}$ or $\overline{\text{GRST}}$.

6.6 Socket Power Management Register

This register provides power management control over the socket through a mechanism for slowing or stopping the clock on the card interface when the card is idle. See Table 6−7 for a complete description of the register contents.

CardBus register offset: CardBus Socket Address + 20h
Register type: Read-only, Read/Write
Default value: 0000 0000h

BIT NUMBER	31	30	29	28	27	26	25	24	23	22	21	20	19	18	17	16
RESET STATE	0	0	0	0	0	0	0	0	0	0	0	0	0	0	0	0
BIT NUMBER	**15**	**14**	**13**	**12**	**11**	**10**	**9**	**8**	**7**	**6**	**5**	**4**	**3**	**2**	**1**	**0**
RESET STATE	0	0	0	0	0	0	0	0	0	0	0	0	0	0	0	0

Table 6−7. Socket Power Management Register Description

BIT	SIGNAL	TYPE	FUNCTION
31−26	RSVD	R	Reserved. These bits return 00 0000b when read.
25 ‡	SKTACCES	R	Socket access status. This bit provides information on whether a socket access has occurred. This bit is cleared by a read access. 0 = No PC Card access has occurred (default). 1 = PC Card has been accessed.
24 ‡	SKTMODE	R	Socket mode status. This bit provides clock mode information. 0 = Normal clock operation 1 = Clock frequency has changed.
23−17	RSVD	R	These bits return 000 0000b when read.
16	CLKCTRLEN	RW	CardBus clock control enable. This bit, when set, enables clock control according to bit 0 (CLKCTRL). 0 = Clock control disabled (default) 1 = Clock control enabled
15−1	RSVD	R	These bits return 0s when read.
0	CLKCTRL	RW	CardBus clock control. This bit determines whether the CardBus $\overline{\text{CLKRUN}}$ protocol attempts to stop or slow the CardBus clock during idle states. The CLKCTRLEN bit enables this bit. 0 = Allows the CardBus $\overline{\text{CLKRUN}}$ protocol to attempt to stop the CardBus clock (default) 1 = Allows the CardBus $\overline{\text{CLKRUN}}$ protocol to attempt to slow the CardBus clock by a factor of 16.

‡ This bit is cleared only by the assertion of $\overline{\text{GRST}}$.

7 OHCI Controller Programming Model

This section describes the internal PCI configuration registers used to program the PCIxx12 1394 open host controller interface. All registers are detailed in the same format: a brief description for each register is followed by the register offset and a bit table describing the reset state for each register.

A bit description table, typically included when the register contains bits of more than one type or purpose, indicates bit field names, a detailed field description, and field access tags which appear in the *type* column. Table 4−1 describes the field access tags.

The controller is a multifunction PCI device. The 1394 OHCI is integrated as PCI function 1. The function 1 configuration header is compliant with the *PCI Local Bus Specification* as a standard header. Table 7−1 illustrates the configuration header that includes both the predefined portion of the configuration space and the user-definable registers.

Table 7−1. Function 1 Configuration Register Map

REGISTER NAME				OFFSET
Device ID		Vendor ID		00h
Status		Command		04h
Class code			Revision ID	08h
BIST	Header type	Latency timer	Cache line size	0Ch
OHCI base address				10h
TI extension base address				14h
CardBus CIS base address				18h
Reserved				1Ch−27h
CardBus CIS pointer ‡				28h
Subsystem ID ‡		Subsystem vendor ID ‡		2Ch
Reserved				30h
Reserved			PCI power management capabilities pointer	34h
Reserved				38h
Maximum latency ‡	Minimum grant ‡	Interrupt pin	Interrupt line	3Ch
PCI OHCI control				40h
Power management capabilities		Next item pointer	Capability ID	44h
PM data	PMCSR_BSE	Power management control and status ‡		48h
Reserved				4Ch−EBh
PCI PHY control ‡				ECh
PCI miscellaneous configuration ‡				F0h
Link enhancement control ‡				F4h
Subsystem access ‡				F8h
GPIO control				FCh

‡ One or more bits in this register are cleared only by the assertion of $\overline{\text{GRST}}$.

7.1 Vendor ID Register

The vendor ID register contains a value allocated by the PCI SIG and identifies the manufacturer of the PCI device. The vendor ID assigned to Texas Instruments is 104Ch.

Function 1 register offset: 00h
Register type: Read-only
Default value: 104Ch

BIT NUMBER	15	14	13	12	11	10	9	8	7	6	5	4	3	2	1	0
RESET STATE	0	0	0	1	0	0	0	0	0	1	0	0	1	1	0	0

7.2 Device ID Register

The device ID register contains a value assigned to the controller by Texas Instruments. The device identification for the controller is 803Ah.

Function 1 register offset: 02h
Register type: Read-only
Default value: 803Ah

BIT NUMBER	15	14	13	12	11	10	9	8	7	6	5	4	3	2	1	0
RESET STATE	1	0	0	0	0	0	0	0	0	0	1	1	1	0	1	0

7.3 Command Register

The command register provides control over the interface to the PCI bus. All bit functions adhere to the definitions in the *PCI Local Bus Specification*, as seen in the following bit descriptions. See Table 7−2 for a complete description of the register contents.

Function 1 register offset: 04h
Register type: Read/Write, Read-only
Default value: 0000h

BIT NUMBER	15	14	13	12	11	10	9	8	7	6	5	4	3	2	1	0
RESET STATE	0	0	0	0	0	0	0	0	0	0	0	0	0	0	0	0

Table 7−2. Command Register Description

BIT	FIELD NAME	TYPE	DESCRIPTION
15−11	RSVD	R	Reserved. Bits 15−11 return 00000b when read.
10	INT_DISABLE	RW	$\overline{\text{INTx}}$ disable. When set to 1b, this bit disables the function from asserting interrupts on the $\overline{\text{INTx}}$ signals. 0 = $\overline{\text{INTx}}$ assertion is enabled (default) 1 = $\overline{\text{INTx}}$ assertion is disabled
9	FBB_ENB	R	Fast back-to-back enable. The controller does not generate fast back-to-back transactions; therefore, bit 9 returns 0b when read.
8	SERR_ENB	RW	$\overline{\text{SERR}}$ enable. When bit 8 is set to 1b, the $\overline{\text{SERR}}$ driver is enabled. $\overline{\text{SERR}}$ can be asserted after detecting an address parity error on the PCI bus. The default value for this bit is 0b.
7	RSVD	R	Reserved. Bit 7 returns 0b when read.
6	PERR_ENB	RW	Parity error enable. When bit 6 is set to 1b, the controller is enabled to drive $\overline{\text{PERR}}$ response to parity errors through the $\overline{\text{PERR}}$ signal. The default value for this bit is 0b.
5	VGA_ENB	R	VGA palette snoop enable. The controller does not feature VGA palette snooping; therefore, bit 5 returns 0b when read.
4	MWI_ENB	RW	Memory write and invalidate enable. When bit 4 is set to 1b, the controller is enabled to generate MWI PCI bus commands. If this bit is cleared, then the controller generates memory write commands instead. The default value for this bit is 0b.
3	SPECIAL	R	Special cycle enable. The PCIxx12 function does not respond to special cycle transactions; therefore, bit 3 returns 0b when read.
2	MASTER_ENB	RW	Bus master enable. When bit 2 is set to 1b, the controller is enabled to initiate cycles on the PCI bus. The default value for this bit is 0b.
1	MEMORY_ENB	RW	Memory response enable. Setting bit 1 to 1b enables the controller to respond to memory cycles on the PCI bus. This bit must be set to access OHCI registers. The default value for this bit is 0b.
0	IO_ENB	R	I/O space enable. The controller does not implement any I/O-mapped functionality; therefore, bit 0 returns 0b when read.

7.4 Status Register

The status register provides status over the interface to the PCI bus. All bit functions adhere to the definitions in the *PCI Local Bus Specification*, as seen in the following bit descriptions. See Table 7−3 for a complete description of the register contents.

Function 1 register offset: 06h
Register type: Read/Clear/Update, Read-only
Default value: 0210h

BIT NUMBER	15	14	13	12	11	10	9	8	7	6	5	4	3	2	1	0
RESET STATE	0	0	0	0	0	0	1	0	0	0	0	1	0	0	0	0

Table 7−3. Status Register Description

BIT	FIELD NAME	TYPE	DESCRIPTION
15	PAR_ERR	RCU	Detected parity error. Bit 15 is set to 1b when either an address parity or data parity error is detected.
14	SYS_ERR	RCU	Signaled system error. Bit 14 is set to 1b when $\overline{\text{SERR}}$ is enabled and the controller has signaled a system error to the host.
13	MABORT	RCU	Received master abort. Bit 13 is set to 1b when a cycle initiated by the controller on the PCI bus has been terminated by a master abort.
12	TABORT_REC	RCU	Received target abort. Bit 12 is set to 1b when a cycle initiated by the controller on the PCI bus was terminated by a target abort.
11	TABORT_SIG	RCU	Signaled target abort. Bit 11 is set to 1b by the controller when it terminates a transaction on the PCI bus with a target abort.
10−9	PCI_SPEED	R	DEVSEL timing. Bits 10 and 9 encode the timing of $\overline{\text{DEVSEL}}$ and are hardwired to 01b, indicating that the controller asserts this signal at a medium speed on nonconfiguration cycle accesses.
8	DATAPAR	RCU	Data parity error detected. Bit 8 is set to 1b when the following conditions have been met: a. $\overline{\text{PERR}}$ was asserted by any PCI device including the controller. b. The controller was the bus master during the data parity error. c. Bit 6 (PERR_EN) in the command register at offset 04h in the PCI configuration space (see Section 7.3) is set to 1b.
7	FBB_CAP	R	Fast back-to-back capable. The controller cannot accept fast back-to-back transactions; therefore, bit 7 is hardwired to 0b.
6	UDF	R	User-definable features (UDF) supported. The controller does not support the UDF; therefore, bit 6 is hardwired to 0b.
5	66MHZ	R	66-MHz capable. The controller operates at a maximum PCLK frequency of 33 MHz; therefore, bit 5 is hardwired to 0b.
4	CAPLIST	R	Capabilities list. Bit 4 returns 1b when read, indicating that capabilities additional to standard PCI are implemented. The linked list of PCI power-management capabilities is implemented in this function.
3	INT_STATUS	RU	Interrupt status. This bit reflects the interrupt status of the function. Only when bit 10 (INT_DISABLE) in the command register (see Section 7.3) is 0b and this bit is 1b, is the function's $\overline{\text{INTx}}$ signal asserted. Setting the INT_DISABLE bit to 1b has no effect on the state of this bit.
2−0	RSVD	R	Reserved. Bits 2−0 return 000b when read.

7.5 Class Code and Revision ID Register

The class code and revision ID register categorizes the controller as a serial bus controller (0Ch), controlling an IEEE 1394 bus (00h), with an OHCI programming model (10h). Furthermore, the TI chip revision is indicated in the least significant byte. See Table 7−4 for a complete description of the register contents.

Function 1 register offset: 08h
Register type: Read-only
Default value: 0C00 1000h

BIT NUMBER	31	30	29	28	27	26	25	24	23	22	21	20	19	18	17	16
RESET STATE	0	0	0	0	1	1	0	0	0	0	0	0	0	0	0	0
BIT NUMBER	**15**	**14**	**13**	**12**	**11**	**10**	**9**	**8**	**7**	**6**	**5**	**4**	**3**	**2**	**1**	**0**
RESET STATE	0	0	0	1	0	0	0	0	0	0	0	0	0	0	0	0

Table 7−4. Class Code and Revision ID Register Description

BIT	FIELD NAME	TYPE	DESCRIPTION
31−24	BASECLASS	R	Base class. This field returns 0Ch when read, which broadly classifies the function as a serial bus controller.
23−16	SUBCLASS	R	Subclass. This field returns 00h when read, which specifically classifies the function as controlling an IEEE 1394 serial bus.
15−8	PGMIF	R	Programming interface. This field returns 10h when read, which indicates that the programming model is compliant with the *1394 Open Host Controller Interface Specification*.
7−0	CHIPREV	R	Silicon revision. This field returns 00h when read, which indicates the silicon revision of the controller.

7.6 Latency Timer and Class Cache Line Size Register

The latency timer and class cache line size register is programmed by host BIOS to indicate system cache line size and the latency timer associated with the controller. See Table 7−5 for a complete description of the register contents.

Function 1 register offset: 0Ch
Register type: Read/Write
Default value: 0000h

BIT NUMBER	15	14	13	12	11	10	9	8	7	6	5	4	3	2	1	0
RESET STATE	0	0	0	0	0	0	0	0	0	0	0	0	0	0	0	0

Table 7−5. Latency Timer and Class Cache Line Size Register Description

BIT	FIELD NAME	TYPE	DESCRIPTION
15−8	LATENCY_TIMER	RW	PCI latency timer. The value in this register specifies the latency timer for the controller, in units of PCI clock cycles. When the controller is a PCI bus initiator and asserts $\overline{\text{FRAME}}$, the latency timer begins counting from zero. If the latency timer expires before the transaction has terminated, then the controller terminates the transaction when its $\overline{\text{GNT}}$ is deasserted. The default value for this field is 00h.
7−0	CACHELINE_SZ	RW	Cache line size. This value is used by the controller during memory write and invalidate, memory-read line, and memory-read multiple transactions. The default value for this field is 00h.

7.7 Header Type and BIST Register

The header type and built-in self-test (BIST) register indicates the PCI header type and no built-in self-test. See Table 7−6 for a complete description of the register contents.

Function 1 register offset: 0Eh
Register type: Read-only
Default value: 0080h

BIT NUMBER	15	14	13	12	11	10	9	8	7	6	5	4	3	2	1	0
RESET STATE	0	0	0	0	0	0	0	0	1	0	0	0	0	0	0	0

Table 7−6. Header Type and BIST Register Description

BIT	FIELD NAME	TYPE	DESCRIPTION
15−8	BIST	R	Built-in self-test. The controller does not include a BIST; therefore, this field returns 00h when read.
7−0	HEADER_TYPE	R	PCI header type. The controller includes the standard PCI header, which is communicated by returning 80h when this field is read.

7.8 OHCI Base Address Register

The OHCI base address register is programmed with a base address referencing the memory-mapped OHCI control. When BIOS writes FFFF FFFFh to this register, the value read back is FFFF F800h, indicating that at least 2K bytes of memory address space are required for the OHCI registers. See Table 7−7 for a complete description of the register contents.

Function 1 register offset: 10h
Register type: Read/Write, Read-only
Default value: 0000 0000h

BIT NUMBER	31	30	29	28	27	26	25	24	23	22	21	20	19	18	17	16
RESET STATE	0	0	0	0	0	0	0	0	0	0	0	0	0	0	0	0
BIT NUMBER	**15**	**14**	**13**	**12**	**11**	**10**	**9**	**8**	**7**	**6**	**5**	**4**	**3**	**2**	**1**	**0**
RESET STATE	0	0	0	0	0	0	0	0	0	0	0	0	0	0	0	0

Table 7−7. OHCI Base Address Register Description

BIT	FIELD NAME	TYPE	DESCRIPTION
31−11	OHCIREG_PTR	RW	OHCI register pointer. This field specifies the upper 21 bits of the 32-bit OHCI base address register. The default value for this field is all 0s.
10−4	OHCI_SZ	R	OHCI register size. This field returns 000 0000b when read, indicating that the OHCI registers require a 2K-byte region of memory.
3	OHCI_PF	R	OHCI register prefetch. Bit 3 returns 0b when read, indicating that the OHCI registers are nonprefetchable.
2−1	OHCI_MEMTYPE	R	OHCI memory type. This field returns 00b when read, indicating that the OHCI base address register is 32 bits wide and mapping can be done anywhere in the 32-bit memory space.
0	OHCI_MEM	R	OHCI memory indicator. Bit 0 returns 0b when read, indicating that the OHCI registers are mapped into system memory space.

7.9 TI Extension Base Address Register

The TI extension base address register is programmed with a base address referencing the memory-mapped TI extension registers. When BIOS writes FFFF FFFFh to this register, the value read back is FFFF C000h, indicating that at least 16K bytes of memory address space are required for the TI registers. See Table 7−8 for a complete description of the register contents.

Function 1 register offset: 14h
Register type: Read/Write, Read-only
Default value: 0000 0000h

BIT NUMBER	31	30	29	28	27	26	25	24	23	22	21	20	19	18	17	16
RESET STATE	0	0	0	0	0	0	0	0	0	0	0	0	0	0	0	0
BIT NUMBER	**15**	**14**	**13**	**12**	**11**	**10**	**9**	**8**	**7**	**6**	**5**	**4**	**3**	**2**	**1**	**0**
RESET STATE	0	0	0	0	0	0	0	0	0	0	0	0	0	0	0	0

Table 7−8. TI Base Address Register Description

BIT	FIELD NAME	TYPE	DESCRIPTION
31−14	TIREG_PTR	RW	TI register pointer. This field specifies the upper 18 bits of the 32-bit TI base address register. The default value for this field is all 0s.
13−4	TI_SZ	R	TI register size. This field returns 0s when read, indicating that the TI registers require a 16K-byte region of memory.
3	TI_PF	R	TI register prefetch. Bit 3 returns 0b when read, indicating that the TI registers are nonprefetchable.
2−1	TI_MEMTYPE	R	TI memory type. This field returns 00b when read, indicating that the TI base address register is 32 bits wide and mapping can be done anywhere in the 32-bit memory space.
0	TI_MEM	R	TI memory indicator. Bit 0 returns 0b when read, indicating that the TI registers are mapped into system memory space.

7.10 CardBus CIS Base Address Register

The internal $\overline{\text{CARDBUS}}$ input to the 1394 OHCI core is tied high such that this register returns 0s when read. See Table 7−9 for a complete description of the register contents.

Function 1 register offset: 18h
Register type: Read/Write, Read-only
Default value: 0000 0000h

BIT NUMBER	31	30	29	28	27	26	25	24	23	22	21	20	19	18	17	16
RESET STATE	0	0	0	0	0	0	0	0	0	0	0	0	0	0	0	0
BIT NUMBER	**15**	**14**	**13**	**12**	**11**	**10**	**9**	**8**	**7**	**6**	**5**	**4**	**3**	**2**	**1**	**0**
RESET STATE	0	0	0	0	0	0	0	0	0	0	0	0	0	0	0	0

Table 7−9. CardBus CIS Base Address Register Description

BIT	FIELD NAME	TYPE	DESCRIPTION
31−11	CIS_BASE	RW	CIS base address. This field specifies the upper 21 bits of the 32-bit CIS base address. If $\overline{\text{CARDBUS}}$ is sampled high on a $\overline{\text{GRST}}$, then this field is read-only, returning 0s when read.
10−4	CIS_SZ	R	CIS address space size. This field returns 000 0000b when read, indicating that the CIS space requires a 2K-byte region of memory.
3	CIS_PF	R	CIS prefetch. Bit 3 returns 0b when read, indicating that the CIS is nonprefetchable. Furthermore, the CIS is a byte-accessible address space, and either a doubleword or 16-bit word access yields indeterminate results.
2−1	CIS_MEMTYPE	R	CIS memory type. This field returns 00b when read, indicating that the CardBus CIS base address register is 32 bits wide and mapping can be done anywhere in the 32-bit memory space.
0	CIS_MEM	R	CIS memory indicator. Bit 0 returns 0b when read, indicating that the CIS is mapped into system memory space.

7.11 CardBus CIS Pointer Register

The internal $\overline{\text{CARDBUS}}$ input to the 1394 OHCI core is tied high such that this register returns 0000 0000h when read.

Function 1 register offset: 28h
Register type: Read-only
Default value: 0000 0000h

BIT NUMBER	31	30	29	28	27	26	25	24	23	22	21	20	19	18	17	16
RESET STATE	0	0	0	0	0	0	0	0	0	0	0	0	0	0	0	0
BIT NUMBER	**15**	**14**	**13**	**12**	**11**	**10**	**9**	**8**	**7**	**6**	**5**	**4**	**3**	**2**	**1**	**0**
RESET STATE	0	0	0	0	0	0	0	0	0	0	0	0	0	0	0	0

7.12 Subsystem Identification Register

The subsystem identification register is used for system and option card identification purposes. This register can be initialized from the serial EEPROM or programmed via the subsystem access register at offset F8h in the PCI configuration space (see Section 7.25). See Table 7−10 for a complete description of the register contents.

Function 1 register offset: 2Ch
Register type: Read/Update
Default value: 0000 0000h

BIT NUMBER	31	30	29	28	27	26	25	24	23	22	21	20	19	18	17	16
RESET STATE	0	0	0	0	0	0	0	0	0	0	0	0	0	0	0	0
BIT NUMBER	**15**	**14**	**13**	**12**	**11**	**10**	**9**	**8**	**7**	**6**	**5**	**4**	**3**	**2**	**1**	**0**
RESET STATE	0	0	0	0	0	0	0	0	0	0	0	0	0	0	0	0

Table 7−10. Subsystem Identification Register Description

BIT	FIELD NAME	TYPE	DESCRIPTION
31−16 ‡	OHCI_SSID	RU	Subsystem device ID. This field indicates the subsystem device ID.
15−0 ‡	OHCI_SSVID	RU	Subsystem vendor ID. This field indicates the subsystem vendor ID.

‡ These bits are cleared only by the assertion of $\overline{\text{GRST}}$.

7.13 Power Management Capabilities Pointer Register

The power management capabilities pointer register provides a pointer into the PCI configuration header where the power-management register block resides. The configuration header doublewords at offsets 44h and 48h provide the power-management registers. This register is read-only and returns 44h when read.

Function 1 register offset: 34h
Register type: Read-only
Default value: 44h

BIT NUMBER	7	6	5	4	3	2	1	0
RESET STATE	0	1	0	0	0	1	0	0

7.14 Interrupt Line Register

The interrupt line register communicates interrupt line routing information. See Table 7−11 for a complete description of the register contents.

Function 1 register offset: 3Ch
Register type: Read/Write
Default value: FFh

BIT NUMBER	7	6	5	4	3	2	1	0
RESET STATE	1	1	1	1	1	1	1	1

Table 7−11. Interrupt Line Register Description

BIT	FIELD NAME	TYPE	DESCRIPTION
7−0	INTR_LINE	RW	Interrupt line. This field is programmed by the system and indicates to software which interrupt line the interrupt pin is connected to. The default value for this field is 00h.

7.15 Interrupt Pin Register

The value read from this register is function dependent and depends on the values of bits 28, the tie-all bit (TIEALL), and 29, the interrupt tie bit (INTRTIE), in the system control register (PCI offset 80h, see Section 4.29). The INTRTIE bit is compatible with previous TI CardBus controllers, and when set to 1b, ties $\overline{\text{INTB}}$ to $\overline{\text{INTA}}$ internally. The TIEALL bit ties $\overline{\text{INTA}}$, $\overline{\text{INTB}}$, $\overline{\text{INTC}}$, and $\overline{\text{INTD}}$ together internally. The internal interrupt connections set by INTRTIE and TIEALL are communicated to host software through this standard register interface. This read-only register is described for all PCIxx12 functions in Table 7−12.

Function 1 register offset: 3Dh
Register type: Read-only
Default value: 02h

BIT NUMBER	7	6	5	4	3	2	1	0
RESET STATE	0	0	0	0	0	0	1	0

Table 7−12. PCI Interrupt Pin Register—Read-Only INTPIN Per Function

INTRTIE BIT (BIT 29, OFFSET 80H)	TIEALL BIT (BIT 28, OFFSET 80H)	INTPIN FUNCTION 0 (CARDBUS)	INTPIN FUNCTION 1 (1394 OHCI)	INTPIN FUNCTION 2 (FLASH MEDIA)	INTPIN FUNCTION 3 (SD HOST)	INTPIN FUNCTION 4 (SMART CARD)
0	0	01h ($\overline{\text{INTA}}$)	02h ($\overline{\text{INTB}}$)	Determined by bits 6−5 (INT_SEL) in the flash media general control register (see Section 11.21)	Determined by bits 6−5 (INT_SEL) in the SD host general control register (see Section 12.22)	Determined by bits 6−5 (INT_SEL) in the Smart Card general control register (see Section 13.22)
1	0	01h ($\overline{\text{INTA}}$)	01h ($\overline{\text{INTA}}$)			
X	1	01h ($\overline{\text{INTA}}$)	01h ($\overline{\text{INTA}}$)	01h ($\overline{\text{INTA}}$)	01h ($\overline{\text{INTA}}$)	01h ($\overline{\text{INTA}}$)

NOTE: When configuring the controller functions to share PCI interrupts, multifunction terminal MFUNC3 must be configured as IRQSER prior to setting the INTRTIE bit.

7.16 Minimum Grant and Maximum Latency Register

The minimum grant and maximum latency register communicates to the system the desired setting of bits 15−8 in the latency timer and class cache line size register at offset 0Ch in the PCI configuration space (see Section 7.6). If a serial EEPROM is detected, then the contents of this register are loaded through the serial EEPROM interface after a $\overline{\text{GRST}}$. If no serial EEPROM is detected, then this register returns a default value that corresponds to the MAX_LAT = 4, MIN_GNT = 2. See Table 7−13 for a complete description of the register contents.

Function 1 register offset: 3Eh
Register type: Read/Update
Default value: 0402h

BIT NUMBER	15	14	13	12	11	10	9	8	7	6	5	4	3	2	1	0
RESET STATE	0	0	0	0	0	1	0	0	0	0	0	0	0	0	1	0

Table 7−13. Minimum Grant and Maximum Latency Register Description

BIT	FIELD NAME	TYPE	DESCRIPTION
15−8 ‡	MAX_LAT	RU	Maximum latency. The contents of this field may be used by host BIOS to assign an arbitration priority level to the controller. The default for this register indicates that the controller may need to access the PCI bus as often as every 0.25 µs; thus, an extremely high priority level is requested. Bits 11−8 of this field may also be loaded through the serial EEPROM.
7−0 ‡	MIN_GNT	RU	Minimum grant. The contents of this field may be used by host BIOS to assign a latency timer register value to the controller. The default for this register indicates that the controller may need to sustain burst transfers for nearly 64 µs and thus request a large value be programmed in bits 15−8 of the latency timer and class cache line size register at offset 0Ch in the PCI configuration space (see Section 7.6). Bits 3−0 of this field may also be loaded through the serial EEPROM.

‡ These bits are cleared only by the assertion of $\overline{\text{GRST}}$.

7.17 OHCI Control Register

The PCI OHCI control register is defined by the *1394 Open Host Controller Interface Specification* and provides a bit for big endian PCI support. See Table 7−14 for a complete description of the register contents.

Function 1 register offset: 40h
Register type: Read/Write, Read-only
Default value: 0000 0000h

BIT NUMBER	31	30	29	28	27	26	25	24	23	22	21	20	19	18	17	16
RESET STATE	0	0	0	0	0	0	0	0	0	0	0	0	0	0	0	0
BIT NUMBER	**15**	**14**	**13**	**12**	**11**	**10**	**9**	**8**	**7**	**6**	**5**	**4**	**3**	**2**	**1**	**0**
RESET STATE	0	0	0	0	0	0	0	0	0	0	0	0	0	0	0	0

Table 7−14. OHCI Control Register Description

BIT	FIELD NAME	TYPE	DESCRIPTION
31−1	RSVD	R	Reserved. Bits 31−1 return 0s when read.
0	GLOBAL_SWAP	RW	When bit 0 is set to 1b, all quadlets read from and written to the PCI interface are byte-swapped (big endian). The default value for this bit is 0b which is little endian mode.

7.18 Capability ID and Next Item Pointer Registers

The capability ID and next item pointer register identifies the linked-list capability item and provides a pointer to the next capability item. See Table 7−15 for a complete description of the register contents.

Function 1 register offset: 44h
Register type: Read-only
Default value: 0001h

BIT NUMBER	15	14	13	12	11	10	9	8	7	6	5	4	3	2	1	0
RESET STATE	0	0	0	0	0	0	0	0	0	0	0	0	0	0	0	1

Table 7−15. Capability ID and Next Item Pointer Registers Description

BIT	FIELD NAME	TYPE	DESCRIPTION
15−8	NEXT_ITEM	R	Next item pointer. The controller supports only one additional capability that is communicated to the system through the extended capabilities list; therefore, this field returns 00h when read.
7−0	CAPABILITY_ID	R	Capability identification. This field returns 01h when read, which is the unique ID assigned by the PCI SIG for PCI power-management capability.

7.19 Power Management Capabilities Register

The power management capabilities register indicates the capabilities of the controller related to PCI power management. See Table 7−16 for a complete description of the register contents.

Function 1 register offset: 46h
Register type: Read/Update, Read-only
Default value: 7E02h

BIT NUMBER	15	14	13	12	11	10	9	8	7	6	5	4	3	2	1	0
RESET STATE	0	1	1	1	1	1	1	0	0	0	0	0	0	0	1	0

Table 7−16. Power Management Capabilities Register Description

BIT	FIELD NAME	TYPE	DESCRIPTION
15	PME_D3COLD	RU	$\overline{\text{PME}}$ support from $D3_{cold}$. This bit can be set to 1b or cleared to 0b via bit 15 (PME_D3COLD) in the PCI miscellaneous configuration register at offset F0h in the PCI configuration space (see Section 7.23). The PCI miscellaneous configuration register is loaded from ROM. When this bit is set to 1b, it indicates that the controller is capable of generating a $\overline{\text{PME}}$ wake event from $D3_{cold}$. This bit state is dependent upon the V_{AUX} implementation and may be configured by using bit 15 (PME_D3COLD) in the PCI miscellaneous configuration register (see Section 7.23).
14−11	PME_SUPPORT	R	$\overline{\text{PME}}$ support. This 4-bit field indicates the power states from which the controller may assert $\overline{\text{PME}}$. This field returns a value of 1111b by default, indicating that $\overline{\text{PME}}$ may be asserted from the $D3_{hot}$, D2, D1, and D0 power states.
10	D2_SUPPORT	R	D2 support. Bit 10 is hardwired to 1b, indicating that the controller supports the D2 power state.
9	D1_SUPPORT	R	D1 support. Bit 9 is hardwired to 1b, indicating that the controller supports the D1 power state.
8−6	AUX_CURRENT	R	Auxiliary current. This 3-bit field reports the 3.3-V_{AUX} auxiliary current requirements. When bit 15 (PME_D3COLD) is cleared, this field returns 000b; otherwise, it returns 001b. 000b = Self-powered 001b = 55 mA (3.3-V_{AUX} maximum current required)
5	DSI	R	Device-specific initialization. This bit returns 0b when read, indicating that the controller does not require special initialization beyond the standard PCI configuration header before a generic class driver is able to use it.
4	RSVD	R	Reserved. Bit 4 returns 0b when read.
3	PME_CLK	R	$\overline{\text{PME}}$ clock. This bit returns 0b when read, indicating that no host bus clock is required for the controller to generate $\overline{\text{PME}}$.
2−0	PM_VERSION	RU	Power-management version. If bit 7 (PCI_PM_VERSION_CTRL) in the PCI miscellaneous configuration register (offset F0h, see Section 7.23) is 0b, this field returns 010b indicating *PCI Bus Power Management Interface Specification* (Revision 1.1) compatibility. If the PCI_PM_VERSION_CTRL bit is 1b, this field returns 011b indicating *PCI Bus Power Management Interface Specification* (Revision 1.2) compatibility.

7.20 Power Management Control and Status Register

The power management control and status register implements the control and status of the PCI power-management function. This register is not affected by the internally generated reset caused by the transition from the $D3_{hot}$ to D0 state. See Table 7−17 for a complete description of the register contents.

Function 1 register offset: 48h
Register type: Read/Clear, Read/Write, Read-only
Default value: 0000h

BIT NUMBER	15	14	13	12	11	10	9	8	7	6	5	4	3	2	1	0
RESET STATE	0	0	0	0	0	0	0	0	0	0	0	0	0	0	0	0

Table 7−17. Power Management Control and Status Register Description

BIT	FIELD NAME	TYPE	DESCRIPTION
15 ‡	PME_STS	RWC	Bit 15 is set to 1b when the controller normally asserts the $\overline{PME}$ signal independent of the state of bit 8 (PME_ENB). This bit is cleared by a writeback of 1b, which also clears the $\overline{PME}$ signal driven by the controller. Writing 0b to this bit has no effect.
14−13	DATA_SCALE	R	This field returns 00b, because the data register is not implemented.
12−9	DATA_SELECT	R	This field returns 0h, because the data register is not implemented.
8 ‡	PME_ENB	RW	When bit 8 is set to 1b, $\overline{PME}$ assertion is enabled. When bit 8 is cleared, $\overline{PME}$ assertion is disabled. This bit defaults to 0b if the function does not support $\overline{PME}$ generation from $D3_{cold}$. If the function supports $\overline{PME}$ from $D3_{cold}$, then this bit is sticky and must be explicitly cleared by the operating system each time it is initially loaded.
7−2	RSVD	R	Reserved. Bits 7−2 return 00 0000b when read.
1−0 ‡	PWR_STATE	RW	Power state. This 2-bit field sets the controller power state and is encoded as follows: 00 = Current power state is D0. 01 = Current power state is D1. 10 = Current power state is D2. 11 = Current power state is D3.

‡ These bits are cleared only by the assertion of $\overline{GRST}$.

7.21 Power Management Extension Registers

The power management extension register provides extended power-management features not applicable to the controller; thus, it is read-only and returns 0000h when read. See Table 7−18 for a complete description of the register contents.

Function 1 register offset: 4Ah
Register type: Read-only
Default value: 0000h

BIT NUMBER	15	14	13	12	11	10	9	8	7	6	5	4	3	2	1	0
RESET STATE	0	0	0	0	0	0	0	0	0	0	0	0	0	0	0	0

Table 7−18. Power Management Extension Registers Description

BIT	FIELD NAME	TYPE	DESCRIPTION
15−0	RSVD	R	Reserved. Bits 15−0 return 0000h when read.

7.22 PCI PHY Control Register

The PCI PHY control register provides a method for enabling the PHY CNA output. See Table 7−19 for a complete description of the register contents.

Function 1 register offset: ECh
Register type: Read/Write, Read-only
Default value: 0000 0008h

BIT NUMBER	31	30	29	28	27	26	25	24	23	22	21	20	19	18	17	16
RESET STATE	0	0	0	0	0	0	0	0	0	0	0	0	0	0	0	0
BIT NUMBER	**15**	**14**	**13**	**12**	**11**	**10**	**9**	**8**	**7**	**6**	**5**	**4**	**3**	**2**	**1**	**0**
RESET STATE	0	0	0	0	0	0	0	0	0	0	0	0	1	0	0	0

Table 7−19. PCI PHY Control Register Description

BIT	FIELD NAME	TYPE	DESCRIPTION
31−8	RSVD	R	Reserved. Bits 31−8 return 00 0000h when read.
7 ‡	CNAOUT	RW	When bit 7 is set to 1b, the PHY CNA output is routed to terminal P18. When implementing a serial EEPROM, this bit is loaded via the serial EEPROM as defined by Table 3−9 and must be 1b for normal operation.
6−5	RSVD	R	Reserved. Bits 6−5 return 00b when read. These bits must be 00b for normal operation.
4 ‡	PHYRST	RW	PHY reset. This bit controls the RST input to the PHY. When bit 4 is set, the PHY reset is asserted. The default value is 0b. This bit must be 0b for normal operation.
3 ‡	RSVD	RW	Reserved. Bit 3 defaults to 1b to indicate compliance with IEEE Std 1394a-2000. This bit is loaded via the serial EEPROM as defined by Table 3−9 and must be 1b for normal operation.
2 ‡	PD	RW	This bit controls the power-down input to the PHY. When bit 2 is set, the PHY is in the power-down mode and enters the ULP mode if the LPS is disabled. If PD is asserted, then a reset to the physical layer must be initiated via bit 4 (PHYRST) after PD is cleared. The default value is 0b. This bit must be 0b for normal operation.
1−0 ‡	RSVD	RW	Reserved. Bits 1−0 return 00b when read. These bits are affected when implementing a serial EEPROM; thus, bits 1−0 are loaded via the serial EEPROM as defined by Table 3−9 and must be 00b for normal operation.

‡ These bits are cleared only by the assertion of $\overline{\text{GRST}}$.

7.23 PCI Miscellaneous Configuration Register

The PCI miscellaneous configuration register provides miscellaneous PCI-related configuration. See Table 7−20 for a complete description of the register contents.

Function 1 register offset: F0h
Register type: Read/Write, Read-only
Default value: 0000 0800h

BIT NUMBER	31	30	29	28	27	26	25	24	23	22	21	20	19	18	17	16
RESET STATE	0	0	0	0	0	0	0	0	0	0	0	0	0	0	0	0
BIT NUMBER	**15**	**14**	**13**	**12**	**11**	**10**	**9**	**8**	**7**	**6**	**5**	**4**	**3**	**2**	**1**	**0**
RESET STATE	0	0	0	0	1	0	0	0	0	0	0	0	0	0	0	0

Table 7−20. PCI Miscellaneous Configuration Register Description

BIT	FIELD NAME	TYPE	DESCRIPTION
31−16	RSVD	R	Reserved. Bits 31−16 return 0000h when read.
15 ‡	PME_D3COLD	RW	$\overline{\text{PME}}$ support from $D3_{cold}$. This bit programs bit 15 (PME_D3COLD) in the power management capabilities register at offset 46h in the PCI configuration space (see Section 7.19).
14−12 ‡	POWER_CLASS	RW	Power Class. This field sets the power class for the controller. These three bits are routed to signals in the controller design that are then connected to the power class terminals on the 1394 OHCI core. Bit 14 corresponds to PC2, bit 13 corresponds to PC1, and bit 12 corresponds to PC0.
11 ‡	PCI2_3_EN	R	PCI 2.3 enable. The 1394 OHCI function always conforms to the PCI 2.3 specification. Therefore, this bit is tied to 1b.
10 ‡	ignore_ mstrIntEna_ for_pme	RW	Ignore IntMask.msterIntEnable bit for PME generation. When set, this bit causes the PME generation behavior to be changed as described in Section 3.8. When set, this bit also causes bit 26 of the OHCI vendor ID register at OHCI offset 40h (see Section 8.15) to read 1b; otherwise, bit 26 reads 0b. 0 = PME behavior generated from unmasked interrupt bits and IntMask.masterIntEnable bit (default) 1 = PME generation does not depend on the value of IntMask.masterIntEnable
9−8 ‡	MR_ENHANCE	RW	This field selects the read command behavior of the PCI master for read transactions of greater than two data phases. For read transactions of one or two data phases, a memory read command is used. The default of this field is 00b. This register is loaded by the serial EEPROM word 12, bits 1−0. 00 = Memory read line (default) 01 = Memory read 10 = Memory read multiple 11 = Reserved, behavior reverts to default
7 ‡	PCI_PM_ VERSION_CTRL	RW	PCI power-management version control. This bit controls the value reported in bits 2−0 (PM_VERSION) of the power management capabilities register (offset 46h, see Section 7.19) of the 1394 OHCI function. 0 = PM_VERSION reports 010b for *PCI Bus Power Management Interface Specification* (Revision 1.1) compatability. 1 = PM_VERSION reports 011b for *PCI Bus Power Management Interface Specification* (Revision 1.2) compatability.
6	RSVD	R	Reserved. Bit 6 returns 0b when read.
5 ‡	RSVD	R	Reserved. Bit 5 returns 0b when read.
4 ‡	DIS_TGT_ABT	RW	Bit 4 defaults to 0b, which provides OHCI-Lynx™ compatible target abort signaling. When this bit is set to 1b, it enables the no-target-abort mode, in which the controller returns indeterminate data instead of signaling target abort. The LLC is divided into the PCLK and SCLK domains. If software tries to access registers in the link that are not active because the SCLK is disabled, then a target abort is issued by the link. On some systems, this can cause a problem resulting in a fatal system error. Enabling this bit allows the link to respond to these types of requests by returning FFh. It is recommended that this bit be cleared to 0b.
3 ‡	GP2IIC	RW	When bit 3 is set to 1b, the GPIO3 and GPIO2 signals are internally routed to the SCL and SDA, respectively. The GPIO3 and GPIO2 terminals are also placed in the high-impedance state.

‡ This bit is cleared only by the assertion of $\overline{\text{GRST}}$.

Table 7−20. PCI Miscellaneous Configuration Register Description (Continued)

2 ‡	DISABLE_ SCLKGATE	RW	When bit 2 is set to 1b, the internal SCLK runs identically with the chip input. This is a test feature only and must be cleared to 0b (all applications).
1 ‡	DISABLE_ PCIGATE	RW	When bit 1 is set to 1b, the internal PCI clock runs identically with the chip input. This is a test feature only and must be cleared to 0b (all applications).
0 ‡	KEEP_PCLK	RW	When bit 0 is set to 1b, the PCI clock is always kept running through the $\overline{\text{CLKRUN}}$ protocol. When this bit is cleared, the PCI clock can be stopped using $\overline{\text{CLKRUN}}$ on MFUNC6.

‡ This bit is cleared only by the assertion of $\overline{\text{GRST}}$.

7.24 Link Enhancement Control Register

The link enhancement control register implements TI proprietary bits that are initialized by software or by a serial EEPROM, if present. After these bits are set to 1, their functionality is enabled only if bit 22 (aPhyEnhanceEnable) in the host controller control register at OHCI offset 50h/54h (see Section 8.16) is set to 1b. See Table 7−21 for a complete description of the register contents.

Function 1 register offset: F4h
Register type: Read/Write, Read-only
Default value: 0000 1000h

BIT NUMBER	31	30	29	28	27	26	25	24	23	22	21	20	19	18	17	16
RESET STATE	0	0	0	0	0	0	0	0	0	0	0	0	0	0	0	0
BIT NUMBER	**15**	**14**	**13**	**12**	**11**	**10**	**9**	**8**	**7**	**6**	**5**	**4**	**3**	**2**	**1**	**0**
RESET STATE	0	0	0	1	0	0	0	0	0	0	0	0	0	0	0	0

Table 7−21. Link Enhancement Control Register Description

BIT	FIELD NAME	TYPE	DESCRIPTION
31−16	RSVD	R	Reserved. Bits 31−16 return 0000h when read.
15 ‡	dis_at_pipeline	RW	Disable AT pipelining. When bit 15 is set to 1b, out-of-order AT pipelining is disabled. The default value for this bit is 0b.
14 ‡	RSVD	R	Reserved. Bit 14 defaults to 0b and must remain 0b for normal operation of the OHCI core.
13−12 ‡	atx_thresh	RW	This field sets the initial AT threshold value, which is used until the AT FIFO is underrun. When the controller retries the packet, it uses a 2K-byte threshold, resulting in a store-and-forward operation. 00 = Threshold ~ 2K bytes resulting in a store-and-forward operation 01 = Threshold ~ 1.7K bytes (default) 10 = Threshold ~ 1K bytes 11 = Threshold ~ 512 bytes These bits fine-tune the asynchronous transmit threshold. For most applications the 1.7K-byte threshold is optimal. Changing this value may increase or decrease the 1394 latency depending on the average PCI bus latency. Setting the AT threshold to 1.7K, 1K, or 512 bytes results in data being transmitted at these thresholds or when an entire packet has been checked into the FIFO. If the packet to be transmitted is larger than the AT threshold, then the remaining data must be received before the AT FIFO is emptied; otherwise, an underrun condition occurs, resulting in a packet error at the receiving node. As a result, the link then commences a store-and-forward operation. It waits until it has the complete packet in the FIFO before retransmitting it on the second attempt to ensure delivery. An AT threshold of 2K results in a store-and-forward operation, which means that asynchronous data is not transmitted until an end-of-packet token is received. Restated, setting the AT threshold to 2K results in only complete packets being transmitted. Note that this controller always uses a store-and-forward operation when the asynchronous transmit retries register at OHCI offset 08h (see Section 8.3) is cleared.
11	RSVD	R	Reserved. Bit 11 returns 0b when read.
10 ‡	enab_mpeg_ts	RW	Enable MPEG CIP timestamp enhancement. When bit 9 is set to 1b, the enhancement is enabled for MPEG CIP transmit streams (FMT = 20h). The default value for this bit is 0b.

‡ These bits are cleared only by the assertion of $\overline{\text{GRST}}$.

Table 7−21. Link Enhancement Control Register Description (Continued)

BIT	FIELD NAME	TYPE	DESCRIPTION
9	RSVD	R	Reserved. Bit 9 returns 0b when read.
8 ‡	enab_dv_ts	RW	Enable DV CIP timestamp enhancement. When bit 8 is set to 1b, the enhancement is enabled for DV CIP transmit streams (FMT = 00h). The default value for this bit is 0b.
7 ‡	enab_unfair	RW	Enable asynchronous priority requests. OHCI-Lynx™ compatible. Setting bit 7 to 1b enables the link to respond to requests with priority arbitration. It is recommended that this bit be set to 1b. The default value for this bit is 0b.
6	RSVD	R	This bit is not assigned in the PCIxx12 follow-on products, because this bit location loaded by the serial EEPROM from the enhancements field corresponds to bit 23 (programPhyEnable) in the host controller control register at OHCI offset 50h/54h (see Section 8.16).
5−3	RSVD	R	Reserved. Bits 5−3 return 000b when read.
2 ‡	RSVD	R	Reserved. Bit 2 returns 0b when read.
1 ‡	enab_accel	RW	Enable acceleration enhancements. OHCI-Lynx™ compatible. When bit 1 is set to 1b, the PHY layer is notified that the link supports the IEEE Std 1394a-2000 acceleration enhancements, that is, ack-accelerated, fly-by concatenation, etc. It is recommended that this bit be set to 1b. The default value for this bit is 0b.
0	RSVD	R	Reserved. Bit 0 returns 0b when read.

‡ This bit is cleared only by the assertion of $\overline{\text{GRST}}$.

7.25 Subsystem Access Register

Write access to the subsystem access register updates the subsystem identification registers identically to OHCI-Lynx™. The system ID value written to this register may also be read back from this register. See Table 7−22 for a complete description of the register contents.

Function 1 register offset: F8h
Register type: Read/Write
Default value: 0000 0000h

BIT NUMBER	31	30	29	28	27	26	25	24	23	22	21	20	19	18	17	16
RESET STATE	0	0	0	0	0	0	0	0	0	0	0	0	0	0	0	0
BIT NUMBER	**15**	**14**	**13**	**12**	**11**	**10**	**9**	**8**	**7**	**6**	**5**	**4**	**3**	**2**	**1**	**0**
RESET STATE	0	0	0	0	0	0	0	0	0	0	0	0	0	0	0	0

Table 7−22. Subsystem Access Register Description

BIT	FIELD NAME	TYPE	DESCRIPTION
31−16 ‡	SUBDEV_ID	RW	Subsystem device ID alias. This field indicates the subsystem device ID.
15−0 ‡	SUBVEN_ID	RW	Subsystem vendor ID alias. This field indicates the subsystem vendor ID.

‡ These bits are cleared only by the assertion of $\overline{\text{GRST}}$.

7.26 GPIO Control Register

The GPIO control register has the control and status bits for GPIO0, GPIO1, GPIO2, and GPIO3 ports. Upon reset, GPIO0 and GPIO1 default to bus manager contender (BMC) and link power status terminals, respectively. The BMC terminal can be configured as GPIO0 by setting bit 7 (DISABLE_BMC) to 1b. The LPS terminal can be configured as GPIO1 by setting bit 15 (DISABLE_LPS) to 1b. See Table 7−23 for a complete description of the register contents.

Function 1 register offset: FCh
Register type: Read-only, Read/Write
Default value: 0000 0000h

BIT NUMBER	31	30	29	28	27	26	25	24	23	22	21	20	19	18	17	16
RESET STATE	0	0	0	0	0	0	0	0	0	0	0	0	0	0	0	0
BIT NUMBER	**15**	**14**	**13**	**12**	**11**	**10**	**9**	**8**	**7**	**6**	**5**	**4**	**3**	**2**	**1**	**0**
RESET STATE	0	0	0	0	0	0	0	0	0	0	0	0	0	0	0	0

Table 7−23. GPIO Control Register Description

BIT	SIGNAL	TYPE	FUNCTION
31−30	RSVD	R	Reserved. Bits 31 and 30 return 00b when read.
29	GPIO_INV3	R/W	GPIO3 polarity invert. This bit controls the input/output polarity control of GPIO3. 0 = Noninverted (default) 1 = Inverted
28	GPIO_ENB3	R/W	GPIO3 enable control. This bit controls the output enable for GPIO3. 0 = High-impedance output (default) 1 = Output is enabled
27−25	RSVD	R	Reserved. Bits 27−25 return 000b when read.
24	GPIO_DATA3	R/W	GPIO3 data. When GPIO3 output is enabled, the value written to this bit represents the logical data driven to the GPIO3 terminal.
23−22	RSVD	R	Reserved. Bits 23 and 22 return 00b when read.
21	GPIO_INV2	R/W	GPIO2 polarity invert. This bit controls the input/output polarity control of GPIO2. 0 = Noninverted (default) 1 = Inverted
20	GPIO_ENB2	R/W	GPIO2 enable control. This bit controls the output enable for GPIO2. 0 = High-impedance output (default) 1 = Output is enabled
19−17	RSVD	R	Reserved. Bits 19−17 return 000b when read.
16	GPIO_DATA2	R/W	GPIO2 data. When GPIO2 output is enabled, the value written to this bit represents the logical data driven to the GPIO2 terminal.
15	DISABLE_LPS	R/W	Disable link power status (LPS). This bit configures this terminal as 0 = LPS (default) 1 = GPIO1
14	RSVD	R	Reserved. Bit 14 returns 0b when read.
13	GPIO_INV1	R/W	GPIO1 polarity invert. When bit 15 (DISABLE_LPS) is set to 1b, this bit controls the input/output polarity control of GPIO1. 0 = Noninverted (default) 1 = Inverted
12	GPIO_ENB1	R/W	GPIO1 enable control. When bit 15 (DISABLE_LPS) is set to 1b, this bit controls the output enable for GPIO1. 0 = High-impedance output (default) 1 = Output is enabled
11−9	RSVD	R	Reserved. Bits 11−9 return 000b when read.

Table 7−23. GPIO Control Register Description (Continued)

BIT	SIGNAL	TYPE	FUNCTION
8	GPIO_DATA1	R/W	GPIO1 data. When bit 15 (DISABLE_LPS) is set to 1b and GPIO1 output is enabled, the value written to this bit represents the logical data driven to the GPIO1 terminal.
7	DISABLE_BMC	R/W	Disable bus manager contender (BMC). This bit configures this terminal as bus manager contender or GPIO0. 0 = BMC (default) 1 = GPIO0
6	RSVD	R	Reserved. Bit 6 returns 0b when read.
5	GPIO_INV0	R/W	GPIO0 polarity invert. When bit 7 (DISABLE_BMC) is set to 1b, this bit controls the input/output polarity control for GPIO0. 0 = Noninverted (default) 1 = Inverted
4	GPIO_ENB0	R/W	GPIO0 enable control. When bit 7 (DISABLE_BMC) is set to 1b, this bit controls the output enable for GPIO0. 0 = High-impedance output (default) 1 = Output is enabled
3−1	RSVD	R	Reserved. Bits 3−1 return 000b when read.
0	GPIO_DATA0	R/W	GPIO0 data. When bit 7 (DISABLE_BMC) is set to 1b and GPIO0 output is enabled, the value written to this bit represents the logical data driven to the GPIO0 terminal.

8 OHCI Registers

The OHCI registers defined by the *1394 Open Host Controller Interface Specification* are memory-mapped into a 2K-byte region of memory pointed to by the OHCI base address register at offset 10h in PCI configuration space (see Section 7.8). These registers are the primary interface for controlling the PCIxx12 IEEE 1394 link function.

This section provides the register interface and bit descriptions. Several set/clear register pairs in this programming model are implemented to solve various issues with typical read-modify-write control registers. There are two addresses for a set/clear register: RegisterSet and RegisterClear. See Table 8−1 for a register listing. A 1b written to RegisterSet causes the corresponding bit in the set/clear register to be set to 1b; a 0b leaves the corresponding bit unaffected. A 1b written to RegisterClear causes the corresponding bit in the set/clear register to be cleared; a 0b leaves the corresponding bit in the set/clear register unaffected.

Typically, a read from either RegisterSet or RegisterClear returns the contents of the set or clear register, respectively. However, sometimes reading the RegisterClear provides a masked version of the set or clear register. The interrupt event register is an example of this behavior.

Table 8−1. OHCI Register Map

DMA CONTEXT	REGISTER NAME	ABBREVIATION	OFFSET
—	OHCI version	Version	00h
	GUID ROM	GUID_ROM	04h
	Asynchronous transmit retries	ATRetries	08h
	CSR data	CSRData	0Ch
	CSR compare	CSRCompareData	10h
	CSR control	CSRControl	14h
	Configuration ROM header	ConfigROMhdr	18h
	Bus identification	BusID	1Ch
	Bus options ‡	BusOptions	20h
	GUID high ‡	GUIDHi	24h
	GUID low ‡	GUIDLo	28h
	Reserved	—	2Ch−30h
	Configuration ROM mapping	ConfigROMmap	34h
	Posted write address low	PostedWriteAddressLo	38h
	Posted write address high	PostedWriteAddressHi	3Ch
	Vendor ID	VendorID	40h
	Reserved	—	44h−4Ch
	Host controller control ‡	HCControlSet	50h
		HCControlClr	54h
	Reserved	—	58h−5Ch

‡ One or more bits in this register are cleared only by the assertion of $\overline{\text{GRST}}$.

Table 8−1. OHCI Register Map (Continued)

DMA CONTEXT	REGISTER NAME	ABBREVIATION	OFFSET
Self-ID	Reserved	—	60h
	Self-ID buffer pointer	SelfIDBuffer	64h
	Self-ID count	SelfIDCount	68h
	Reserved	—	6Ch
—	Isochronous receive channel mask high	IRChannelMaskHiSet	70h
		IRChannelMaskHiClear	74h
	Isochronous receive channel mask low	IRChannelMaskLoSet	78h
		IRChannelMaskLoClear	7Ch
	Interrupt event	IntEventSet	80h
		IntEventClear	84h
	Interrupt mask	IntMaskSet	88h
		IntMaskClear	8Ch
	Isochronous transmit interrupt event	IsoXmitIntEventSet	90h
		IsoXmitIntEventClear	94h
	Isochronous transmit interrupt mask	IsoXmitIntMaskSet	98h
		IsoXmitIntMaskClear	9Ch
—	Isochronous receive interrupt event	IsoRecvIntEventSet	A0h
		IsoRecvIntEventClear	A4h
	Isochronous receive interrupt mask	IsoRecvIntMaskSet	A8h
		IsoRecvIntMaskClear	ACh
	Initial bandwidth available	InitialBandwidthAvailable	B0h
	Initial channels available high	InitialChannelsAvailableHi	B4h
	Initial channels available low	InitialChannelsAvailableLo	B8h
	Reserved	—	BCh−D8h
	Fairness control	FairnessControl	DCh
	Link control ‡	LinkControlSet	E0h
		LinkControlClear	E4h
	Node identification	NodeID	E8h
	PHY layer control	PhyControl	ECh
	Isochronous cycle timer	Isocyctimer	F0h
	Reserved	—	F4h−FCh
	Asynchronous request filter high	AsyncRequestFilterHiSet	100h
		AsyncRequestFilterHiClear	104h
	Asynchronous request filter low	AsyncRequestFilterLoSet	108h
		AsyncRequestFilterLoClear	10Ch
	Physical request filter high	PhysicalRequestFilterHiSet	110h
		PhysicalRequestFilterHiClear	114h
	Physical request filter low	PhysicalRequestFilterLoSet	118h
		PhysicalRequestFilterLoClear	11Ch
	Physical upper bound	PhysicalUpperBound	120h
	Reserved	—	124h−17Ch

‡ One or more bits in this register are cleared only by the assertion of $\overline{\text{GRST}}$.

Table 8−1. OHCI Register Map (Continued)

DMA CONTEXT	REGISTER NAME	ABBREVIATION	OFFSET
Asynchronous Request Transmit [ATRQ]	Asynchronous context control	ContextControlSet	180h
		ContextControlClear	184h
	Reserved	—	188h
	Asynchronous context command pointer	CommandPtr	18Ch
	Reserved	—	190h−19Ch
Asynchronous Response Transmit [ATRS]	Asynchronous context control	ContextControlSet	1A0h
		ContextControlClear	1A4h
	Reserved	—	1A8h
	Asynchronous context command pointer	CommandPtr	1ACh
	Reserved	—	1B0h−1BCh
Asynchronous Request Receive [ARRQ]	Asynchronous context control	ContextControlSet	1C0h
		ContextControlClear	1C4h
	Reserved	—	1C8h
	Asynchronous context command pointer	CommandPtr	1CCh
	Reserved	—	1D0h−1DCh
Asynchronous Response Receive [ARRS]	Asynchronous context control	ContextControlSet	1E0h
		ContextControlClear	1E4h
	Reserved	—	1E8h
	Asynchronous context command pointer	CommandPtr	1ECh
	Reserved	—	1F0h−1FCh
Isochronous Transmit Context n n = 0, 1, 2, 3, …, 7	Isochronous transmit context control	ContextControlSet	200h + 16*n
		ContextControlClear	204h + 16*n
	Reserved	—	208h + 16*n
	Isochronous transmit context command pointer	CommandPtr	20Ch + 16*n
	Reserved	—	210h−3FCh
Isochronous Receive Context n n = 0, 1, 2, 3	Isochronous receive context control	ContextControlSet	400h + 32*n
		ContextControlClear	404h + 32*n
	Reserved	—	408h + 32*n
	Isochronous receive context command pointer	CommandPtr	40Ch + 32*n
	Isochronous receive context match	ContextMatch	410h + 32*n

8.1 OHCI Version Register

The OHCI version register indicates the OHCI version support and whether or not the serial EEPROM is present. See Table 8−2 for a complete description of the register contents.

OHCI register offset: 00h
Register type: Read-only
Default value: 0X01 0010h

BIT NUMBER	31	30	29	28	27	26	25	24	23	22	21	20	19	18	17	16
RESET STATE	0	0	0	0	0	0	0	X	0	0	0	0	0	0	0	1
BIT NUMBER	**15**	**14**	**13**	**12**	**11**	**10**	**9**	**8**	**7**	**6**	**5**	**4**	**3**	**2**	**1**	**0**
RESET STATE	0	0	0	0	0	0	0	0	0	0	0	1	0	0	0	0

Table 8−2. OHCI Version Register Description

BIT	FIELD NAME	TYPE	DESCRIPTION
31−25	RSVD	R	Reserved. Bits 31−25 return 000 0000b when read.
24 ‡	GUID_ROM	RU	The controller sets bit 24 to 1b if the serial EEPROM is detected. If the serial EEPROM is present, then the Bus_Info_Block is automatically loaded on system (hardware) reset. The default value for this bit is 0b.
23−16	version	R	Major version of the OHCI. The controller is compliant with the *1394 Open Host Controller Interface Specification* (Release 1.1); thus, this field reads 01h.
15−8	RSVD	R	Reserved. Bits 15−8 return 00h when read.
7−0	revision	R	Minor version of the OHCI. The controller is compliant with the *1394 Open Host Controller Interface Specification* (Release 1.1); thus, this field reads 10h.

‡ This bit is cleared only by the assertion of $\overline{\text{GRST}}$.

8.2 GUID ROM Register

The GUID ROM register accesses the serial EEPROM, and is only applicable if bit 24 (GUID_ROM) in the OHCI version register at OHCI offset 00h (see Section 8.1) is set to 1b. See Table 8−3 for a complete description of the register contents.

OHCI register offset: 04h
Register type: Read/Set/Update, Read/Update, Read-only
Default value: 00XX 0000h

BIT NUMBER	31	30	29	28	27	26	25	24	23	22	21	20	19	18	17	16
RESET STATE	0	0	0	0	0	0	0	0	X	X	X	X	X	X	X	X
BIT NUMBER	**15**	**14**	**13**	**12**	**11**	**10**	**9**	**8**	**7**	**6**	**5**	**4**	**3**	**2**	**1**	**0**
RESET STATE	0	0	0	0	0	0	0	0	0	0	0	0	0	0	0	0

Table 8−3. GUID ROM Register Description

BIT	FIELD NAME	TYPE	DESCRIPTION
31	addrReset	RSU	Software sets bit 31 to 1b to reset the GUID ROM address to 0. When the controller completes the reset, it clears this bit. The controller does not automatically fill bits 23−16 (rdData field) with the 0th byte.
30−26	RSVD	R	Reserved. Bits 30−26 return 00000b when read.
25	rdStart	RSU	A read of the currently addressed byte is started when bit 25 is set to 1b. This bit is automatically cleared when the controller completes the read of the currently addressed GUID ROM byte.
24	RSVD	R	Reserved. Bit 24 returns 0b when read.
23−16	rdData	RU	This field contains the data read from the GUID ROM.
15−8	RSVD	R	Reserved. Bits 15−8 return 00h when read.
7−0	miniROM	R	The miniROM field defaults to 00h indicating that no mini-ROM is implemented. If an EEPROM is implemented, then all 8 bits of this miniROM field are downloaded from EEPROM word offset 28h. For this device, the miniROM field must be greater than 61h to indicate a valid miniROM offset into the EEPROM.

8.3 Asynchronous Transmit Retries Register

The asynchronous transmit retries register indicates the number of times the controller attempts a retry for asynchronous DMA request transmit and for asynchronous physical and DMA response transmit. See Table 8−4 for a complete description of the register contents.

OHCI register offset: 08h
Register type: Read/Write, Read-only
Default value: 0000 0000h

BIT NUMBER	31	30	29	28	27	26	25	24	23	22	21	20	19	18	17	16
RESET STATE	0	0	0	0	0	0	0	0	0	0	0	0	0	0	0	0
BIT NUMBER	**15**	**14**	**13**	**12**	**11**	**10**	**9**	**8**	**7**	**6**	**5**	**4**	**3**	**2**	**1**	**0**
RESET STATE	0	0	0	0	0	0	0	0	0	0	0	0	0	0	0	0

Table 8−4. Asynchronous Transmit Retries Register Description

BIT	FIELD NAME	TYPE	DESCRIPTION
31−29	secondLimit	R	The second limit field returns 000b when read, because outbound dual-phase retry is not implemented.
28−16	cycleLimit	R	The cycle limit field returns 0s when read, because outbound dual-phase retry is not implemented.
15−12	RSVD	R	Reserved. Bits 15−12 return 0h when read.
11−8	maxPhysRespRetries	RW	This field tells the physical response unit how many times to attempt to retry the transmit operation for the response packet when a busy acknowledge or ack_data_error is received from the target node. The default value for this field is 0h.
7−4	maxATRespRetries	RW	This field tells the asynchronous transmit response unit how many times to attempt to retry the transmit operation for the response packet when a busy acknowledge or ack_data_error is received from the target node. The default value for this field is 0h.
3−0	maxATReqRetries	RW	This field tells the asynchronous transmit DMA request unit how many times to attempt to retry the transmit operation for the response packet when a busy acknowledge or ack_data_error is received from the target node. The default value for this field is 0h.

8.4 CSR Data Register

The CSR data register accesses the bus management CSR registers from the host through compare-swap operations. This register contains the data to be stored in a CSR if the compare is successful.

OHCI register offset: 0Ch
Register type: Read-only
Default value: XXXX XXXXh

BIT NUMBER	31	30	29	28	27	26	25	24	23	22	21	20	19	18	17	16
RESET STATE	X	X	X	X	X	X	X	X	X	X	X	X	X	X	X	X
BIT NUMBER	**15**	**14**	**13**	**12**	**11**	**10**	**9**	**8**	**7**	**6**	**5**	**4**	**3**	**2**	**1**	**0**
RESET STATE	X	X	X	X	X	X	X	X	X	X	X	X	X	X	X	X

8.5 CSR Compare Register

The CSR compare register accesses the bus management CSR registers from the host through compare-swap operations. This register contains the data to be compared with the existing value of the CSR resource.

OHCI register offset: 10h
Register type: Read-only
Default value: XXXX XXXXh

BIT NUMBER	31	30	29	28	27	26	25	24	23	22	21	20	19	18	17	16
RESET STATE	X	X	X	X	X	X	X	X	X	X	X	X	X	X	X	X
BIT NUMBER	**15**	**14**	**13**	**12**	**11**	**10**	**9**	**8**	**7**	**6**	**5**	**4**	**3**	**2**	**1**	**0**
RESET STATE	X	X	X	X	X	X	X	X	X	X	X	X	X	X	X	X

8.6 CSR Control Register

The CSR control register accesses the bus management CSR registers from the host through compare-swap operations. This register controls the compare-swap operation and selects the CSR resource. See Table 8−5 for a complete description of the register contents.

OHCI register offset: 14h
Register type: Read/Write, Read/Update, Read-only
Default value: 8000 000Xh

BIT NUMBER	31	30	29	28	27	26	25	24	23	22	21	20	19	18	17	16
RESET STATE	1	0	0	0	0	0	0	0	0	0	0	0	0	0	0	0
BIT NUMBER	**15**	**14**	**13**	**12**	**11**	**10**	**9**	**8**	**7**	**6**	**5**	**4**	**3**	**2**	**1**	**0**
RESET STATE	0	0	0	0	0	0	0	0	0	0	0	0	0	0	X	X

Table 8−5. CSR Control Register Description

BIT	FIELD NAME	TYPE	DESCRIPTION
31	csrDone	RU	Bit 31 is set to 1b by the controller when a compare-swap operation is complete. It is cleared whenever this register is written.
30−2	RSVD	R	Reserved. Bits 30−2 return 0s when read.
1−0	csrSel	RW	This field selects the CSR resource as follows: 00 = BUS_MANAGER_ID 01 = BANDWIDTH_AVAILABLE 10 = CHANNELS_AVAILABLE_HI 11 = CHANNELS_AVAILABLE_LO

8.7 Configuration ROM Header Register

The configuration ROM header register externally maps to the first quadlet of the 1394 configuration ROM, offset FFFF F000 0400h. See Table 8−6 for a complete description of the register contents.

OHCI register offset: 18h
Register type: Read/Write
Default value: 0000 XXXXh

BIT NUMBER	31	30	29	28	27	26	25	24	23	22	21	20	19	18	17	16
RESET STATE	0	0	0	0	0	0	0	0	0	0	0	0	0	0	0	0
BIT NUMBER	**15**	**14**	**13**	**12**	**11**	**10**	**9**	**8**	**7**	**6**	**5**	**4**	**3**	**2**	**1**	**0**
RESET STATE	X	X	X	X	X	X	X	X	X	X	X	X	X	X	X	X

Table 8−6. Configuration ROM Header Register Description

BIT	FIELD NAME	TYPE	DESCRIPTION
31−24	info_length	RW	IEEE 1394 bus-management field. Must be valid when bit 17 (linkEnable) in the host controller control register at OHCI offset 50h/54h (see Section 8.16) is set to 1b. The default value for this field is 00h.
23−16	crc_length	RW	IEEE 1394 bus-management field. Must be valid when bit 17 (linkEnable) in the host controller control register at OHCI offset 50h/54h (see Section 8.16) is set to 1b. The default value for this field is 00h.
15−0	rom_crc_value	RW	IEEE 1394 bus-management field. Must be valid at any time bit 17 (linkEnable) in the host controller control register at OHCI offset 50h/54h (see Section 8.16) is set to 1b.

8.8 Bus Identification Register

The bus identification register externally maps to the first quadlet in the Bus_Info_Block and contains the constant 3133 3934h, which is the ASCII value of 1394.

OHCI register offset: 1Ch
Register type: Read-only
Default value: 3133 3934h

BIT NUMBER	31	30	29	28	27	26	25	24	23	22	21	20	19	18	17	16
RESET STATE	0	0	1	1	0	0	0	1	0	0	1	1	0	0	1	1
BIT NUMBER	**15**	**14**	**13**	**12**	**11**	**10**	**9**	**8**	**7**	**6**	**5**	**4**	**3**	**2**	**1**	**0**
RESET STATE	0	0	1	1	1	0	0	1	0	0	1	1	0	1	0	0

8.9 Bus Options Register

The bus options register externally maps to the second quadlet of the Bus_Info_Block. See Table 8−7 for a complete description of the register contents.

OHCI register offset: 20h
Register type: Read/Write, Read-only
Default value: X0XX A0X2h

BIT NUMBER	31	30	29	28	27	26	25	24	23	22	21	20	19	18	17	16
RESET STATE	X	X	X	X	0	0	0	0	X	X	X	X	X	X	X	X
BIT NUMBER	**15**	**14**	**13**	**12**	**11**	**10**	**9**	**8**	**7**	**6**	**5**	**4**	**3**	**2**	**1**	**0**
RESET STATE	1	0	1	0	0	0	0	0	X	X	0	0	0	0	1	0

Table 8−7. Bus Options Register Description

BIT	FIELD NAME	TYPE	DESCRIPTION
31	irmc	RW	Isochronous resource-manager capable. IEEE 1394 bus-management field. Must be valid when bit 17 (linkEnable) in the host controller control register at OHCI offset 50h/54h (see Section 8.16) is set to 1b. The default value for this bit is 0b.
30	cmc	RW	Cycle master capable. IEEE 1394 bus-management field. Must be valid when bit 17 (linkEnable) in the host controller control register at OHCI offset 50h/54h (see Section 8.16) is set to 1b. The default value for this bit is 0b.
29	isc	RW	Isochronous support capable. IEEE 1394 bus-management field. Must be valid when bit 17 (linkEnable) in the host controller control register at OHCI offset 50h/54h (see Section 8.16) is set to 1b. The default value for this bit is 0b.
28	bmc	RW	Bus manager capable. IEEE 1394 bus-management field. Must be valid when bit 17 (linkEnable) in the host controller control register at OHCI offset 50h/54h (see Section 8.16) is set to 1b. The default value for this bit is 0b.
27	pmc	RW	Power-management capable. IEEE 1394 bus-management field. When bit 27 is set to 1b, this indicates that the node is power-management capable. Must be valid when bit 17 (linkEnable) in the host controller control register at OHCI offset 50h/54h (see Section 8.16) is set to 1b. The default value for this bit is 0b.
26−24	RSVD	R	Reserved. Bits 26−24 return 000b when read.
23−16	cyc_clk_acc	RW	Cycle master clock accuracy, in parts per million. IEEE 1394 bus-management field. Must be valid when bit 17 (linkEnable) in the host controller control register at OHCI offset 50h/54h (see Section 8.16) is set to 1b. The default value for this field is 00h.
15−12 ‡	max_rec	RW	Maximum request. IEEE 1394 bus-management field. Hardware initializes this field to indicate the maximum number of bytes in a block request packet that is supported by the implementation. This value, max_rec_bytes, must be 512 or greater, and is calculated by 2^(max_rec + 1). Software may change this field; however, this field must be valid at any time bit 17 (linkEnable) in the host controller control register at OHCI offset 50h/54h (see Section 8.16) is set to 1b. A received block write request packet with a length greater than max_rec_bytes may generate an ack_type_error. This field is not affected by a software reset, and defaults to value indicating 2048 bytes on a system (hardware) reset. The default value for this field is Ah.
11−8	RSVD	R	Reserved. Bits 11−8 return 0h when read.
7−6	g	RW	Generation counter. This field is incremented if any portion of the configuration ROM has been incremented since the prior bus reset.
5−3	RSVD	R	Reserved. Bits 5−3 return 000b when read.
2−0	Lnk_spd	R	Link speed. This field returns 010b, indicating that the link speeds of 100M bits/s, 200M bits/s, and 400M bits/s are supported.

‡ These bits are cleared only by the assertion of $\overline{\text{GRST}}$.

8.10 GUID High Register

The GUID high register represents the upper quadlet in a 64-bit global unique ID (GUID) which maps to the third quadlet in the Bus_Info_Block. This register contains node_vendor_ID and chip_ID_hi fields. This register initializes to 0000 0000h on a system (hardware) reset, which is an illegal GUID value. If a serial EEPROM is detected, then the contents of this register are loaded through the serial EEPROM interface after a $\overline{\text{GRST}}$. At that point, the contents of this register cannot be changed. If no serial EEPROM is detected, then the contents of this register are loaded by the BIOS. At that point, the contents of this register cannot be changed. All bits in this register are reset by $\overline{\text{GRST}}$ only.

OHCI register offset: 24h
Register type: Read-only
Default value: 0000 0000h

BIT NUMBER	31	30	29	28	27	26	25	24	23	22	21	20	19	18	17	16
RESET STATE	0	0	0	0	0	0	0	0	0	0	0	0	0	0	0	0
BIT NUMBER	**15**	**14**	**13**	**12**	**11**	**10**	**9**	**8**	**7**	**6**	**5**	**4**	**3**	**2**	**1**	**0**
RESET STATE	0	0	0	0	0	0	0	0	0	0	0	0	0	0	0	0

8.11 GUID Low Register

The GUID low register represents the lower quadlet in a 64-bit global unique ID (GUID) which maps to chip_ID_lo in the Bus_Info_Block. This register initializes to 0000 0000h on a system (hardware) reset and behaves identical to the GUID high register at OHCI offset 24h (see Section 8.10). All bits in this register are reset by $\overline{\text{GRST}}$ only.

OHCI register offset: 28h
Register type: Read-only
Default value: 0000 0000h

BIT NUMBER	31	30	29	28	27	26	25	24	23	22	21	20	19	18	17	16
RESET STATE	0	0	0	0	0	0	0	0	0	0	0	0	0	0	0	0
BIT NUMBER	**15**	**14**	**13**	**12**	**11**	**10**	**9**	**8**	**7**	**6**	**5**	**4**	**3**	**2**	**1**	**0**
RESET STATE	0	0	0	0	0	0	0	0	0	0	0	0	0	0	0	0

8.12 Configuration ROM Mapping Register

The configuration ROM mapping register contains the start address within system memory that maps to the start address of 1394 configuration ROM for this node. See Table 8−8 for a complete description of the register contents.

OHCI register offset: 34h
Register type: Read/Write
Default value: 0000 0000h

BIT NUMBER	31	30	29	28	27	26	25	24	23	22	21	20	19	18	17	16
RESET STATE	0	0	0	0	0	0	0	0	0	0	0	0	0	0	0	0
BIT NUMBER	**15**	**14**	**13**	**12**	**11**	**10**	**9**	**8**	**7**	**6**	**5**	**4**	**3**	**2**	**1**	**0**
RESET STATE	0	0	0	0	0	0	0	0	0	0	0	0	0	0	0	0

Table 8−8. Configuration ROM Mapping Register Description

BIT	FIELD NAME	TYPE	DESCRIPTION
31−10	configROMaddr	RW	If a quadlet read request to 1394 offset FFFF F000 0400h through offset FFFF F000 07FFh is received, then the low-order 10 bits of the offset are added to this register to determine the host memory address of the read request.
9−0	RSVD	R	Reserved. Bits 9−0 return 0s when read.

8.13 Posted Write Address Low Register

The posted write address low register communicates error information if a write request is posted and an error occurs while the posted data packet is being written. See Table 8−9 for a complete description of the register contents.

OHCI register offset: 38h
Register type: Read/Update
Default value: XXXX XXXXh

BIT NUMBER	31	30	29	28	27	26	25	24	23	22	21	20	19	18	17	16
RESET STATE	X	X	X	X	X	X	X	X	X	X	X	X	X	X	X	X
BIT NUMBER	**15**	**14**	**13**	**12**	**11**	**10**	**9**	**8**	**7**	**6**	**5**	**4**	**3**	**2**	**1**	**0**
RESET STATE	X	X	X	X	X	X	X	X	X	X	X	X	X	X	X	X

Table 8−9. Posted Write Address Low Register Description

BIT	FIELD NAME	TYPE	DESCRIPTION
31−0	offsetLo	RU	The lower 32 bits of the 1394 destination offset of the write request that failed.

8.14 Posted Write Address High Register

The posted write address high register communicates error information if a write request is posted and an error occurs while writing the posted data packet. See Table 8−10 for a complete description of the register contents.

OHCI register offset: 3Ch
Register type: Read/Update
Default value: XXXX XXXXh

BIT NUMBER	31	30	29	28	27	26	25	24	23	22	21	20	19	18	17	16
RESET STATE	X	X	X	X	X	X	X	X	X	X	X	X	X	X	X	X
BIT NUMBER	**15**	**14**	**13**	**12**	**11**	**10**	**9**	**8**	**7**	**6**	**5**	**4**	**3**	**2**	**1**	**0**
RESET STATE	X	X	X	X	X	X	X	X	X	X	X	X	X	X	X	X

Table 8−10. Posted Write Address High Register Description

BIT	FIELD NAME	TYPE	DESCRIPTION
31−16	sourceID	RU	This field is the 10-bit bus number (bits 31−22) and 6-bit node number (bits 21−16) of the node that issued the write request that failed.
15−0	offsetHi	RU	The upper 16 bits of the 1394 destination offset of the write request that failed.

8.15 Vendor ID Register

The vendor ID register holds the company ID of an organization that specifies any vendor-unique registers. The controller implements Texas Instruments unique behavior with regards to OHCI. Thus, this register is read-only and returns 0108 0028h when read.

OHCI register offset: 40h
Register type: Read-only
Default value: 0108 0028h

BIT NUMBER	31	30	29	28	27	26	25	24	23	22	21	20	19	18	17	16
RESET STATE	0	0	0	0	0	0	0	1	0	0	0	0	1	0	0	0
BIT NUMBER	**15**	**14**	**13**	**12**	**11**	**10**	**9**	**8**	**7**	**6**	**5**	**4**	**3**	**2**	**1**	**0**
RESET STATE	0	0	0	0	0	0	0	0	0	0	1	0	1	0	0	0

8.16 Host Controller Control Register

The host controller control set/clear register pair provides flags for controlling the controller. See Table 8−11 for a complete description of the register contents.

OHCI register offset: 50h set register
54h clear register
Register type: Read/Set/Clear/Update, Read/Set/Clear, Read/Clear, Read-only
Default value: X08X 0000h

BIT NUMBER	31	30	29	28	27	26	25	24	23	22	21	20	19	18	17	16
RESET STATE	0	X	0	0	0	0	0	0	1	0	0	0	0	X	0	0
BIT NUMBER	**15**	**14**	**13**	**12**	**11**	**10**	**9**	**8**	**7**	**6**	**5**	**4**	**3**	**2**	**1**	**0**
RESET STATE	0	0	0	0	0	0	0	0	0	0	0	0	0	0	0	0

Table 8−11. Host Controller Control Register Description

BIT	FIELD NAME	TYPE	DESCRIPTION
31	BIBimage Valid	RSU	When bit 31 is set to 1b, the PCIxx12 physical response unit is enabled to respond to block read requests to host configuration ROM and to the mechanism for atomically updating configuration ROM. Software creates a valid image of the bus_info_block in host configuration ROM before setting this bit. When this bit is cleared, the controller returns ack_type_error on block read requests to host configuration ROM. Also, when this bit is cleared and a 1394 bus reset occurs, the configuration ROM mapping register at OHCI offset 34h (see Section 8.12), configuration ROM header register at OHCI offset 18h (see Section 8.7), and bus options register at OHCI offset 20h (see Section 8.9) are not updated. Software can set this bit only when bit 17 (linkEnable) is 0b. Once bit 31 is set to 1b, it can be cleared by a system (hardware) reset, a software reset, or if a fetch error occurs when the controller loads bus_info_block registers from host memory.
30	noByteSwapData	RSC	Bit 30 controls whether physical accesses to locations outside the controller itself, as well as any other DMA data accesses are byte swapped.
29	AckTardyEnable	RSC	Bit 29 controls the acknowledgement of ack_tardy. When bit 29 is set to 1b, ack_tardy may be returned as an acknowledgment to accesses from the 1394 bus to the controller, including accesses to the bus_info_block. The controller returns ack_tardy to all other asynchronous packets addressed to the PCIxx12 node. When the controller sends ack_tardy, bit 27 (ack_tardy) in the interrupt event register at OHCI offset 80h/84h (see Section 8.21) is set to 1b to indicate the attempted asynchronous access. Software ensures that bit 27 (ack_tardy) in the interrupt event register is 0b. Software also unmasks wake-up interrupt events such as bit 19 (phy) and bit 27 (ack_tardy) in the interrupt event register before placing the controller into the D1 power mode. Software must not set this bit if the PCIxx12 node is the 1394 bus manager.
28−24	RSVD	R	Reserved. Bits 28−24 return 00000b when read.
23 ‡	programPhyEnable	R	Bit 23 informs upper-level software that lower-level software has consistently configured the IEEE 1394a-2000 enhancements in the link and PHY layers. When this bit is 1b, generic software such as the OHCI driver is responsible for configuring IEEE 1394a-2000 enhancements in the PHY layer and bit 22 (aPhyEnhanceEnable). When this bit is 0b, the generic software may not modify the IEEE 1394a-2000 enhancements in the PHY layer and cannot interpret the setting of bit 22 (aPhyEnhanceEnable). This bit is initialized from serial EEPROM. This bit defaults to 1b.
22	aPhyEnhanceEnable	RSC	When bits 23 (programPhyEnable) and 17 (linkEnable) are 11b, the OHCI driver can set bit 22 to 1b to use all IEEE 1394a-2000 enhancements. When bit 23 (programPhyEnable) is cleared to 0b, the software does not change PHY enhancements or this bit.
21−20	RSVD	R	Reserved. Bits 21 and 20 return 00b when read.

‡ This bit is cleared only by the assertion of $\overline{\text{GRST}}$.

Table 8−11. Host Controller Control Register Description (Continued)

BIT	FIELD NAME	TYPE	DESCRIPTION
19	LPS	RSC	Bit 19 controls the link power status. Software must set this bit to 1b to permit the link-PHY communication. A prevents link-PHY communication. The OHCI-link is divided into two clock domains (PCLK and PHY_SCLK). If software tries to access any register in the PHY_SCLK domain while the PHY_SCLK is disabled, then a target abort is issued by the link. This problem can be avoided by setting bit 4 (DIS_TGT_ABT) to 1b in the PCI miscellaneous configuration register at offset F0h in the PCI configuration space (see Section 7.23). This allows the link to respond to these types of request by returning all Fs (hex). OHCI registers at offsets DCh−F0h and 100h−11Ch are in the PHY_SCLK domain. After setting LPS, software must wait approximately 10 ms before attempting to access any of the OHCI registers. This gives the PHY_SCLK time to stabilize.
18	postedWriteEnable	RSC	Bit 18 enables (1b) or disables (0b) posted writes. Software changes this bit only when bit 17 (linkEnable) is 0b.
17	linkEnable	RSC	Bit 17 is cleared to 0b by either a system (hardware) or software reset. Software must set this bit to 1b when the system is ready to begin operation and then force a bus reset. This bit is necessary to keep other nodes from sending transactions before the local system is ready. When this bit is cleared, the controller is logically and immediately disconnected from the 1394 bus, no packets are received or processed, nor are packets transmitted.
16	SoftReset	RSCU	When bit 16 is set to 1b, all PCIxx12 states are reset, all FIFOs are flushed, and all OHCI registers are set to their system (hardware) reset values, unless otherwise specified. PCI registers are not affected by this bit. This bit remains set to 1b while the software reset is in progress and reverts back to when the reset has completed.
15−0	RSVD	R	Reserved. Bits 15−0 return 0000h when read.

8.17 Self-ID Buffer Pointer Register

The self-ID buffer pointer register points to the 2K-byte aligned base address of the buffer in host memory where the self-ID packets are stored during bus initialization. Bits 31−11 are read/write accessible. Bits 10−0 are reserved, and return 0s when read.

OHCI register offset: 64h
Register type: Read/Write, Read-only
Default value: XXXX XX00h

BIT NUMBER	31	30	29	28	27	26	25	24	23	22	21	20	19	18	17	16
RESET STATE	X	X	X	X	X	X	X	X	X	X	X	X	X	X	X	X
BIT NUMBER	**15**	**14**	**13**	**12**	**11**	**10**	**9**	**8**	**7**	**6**	**5**	**4**	**3**	**2**	**1**	**0**
RESET STATE	X	X	X	X	X	0	0	0	0	0	0	0	0	0	0	0

8.18 Self-ID Count Register

The self-ID count register keeps a count of the number of times the bus self-ID process has occurred, flags self-ID packet errors, and keeps a count of the self-ID data in the self-ID buffer. See Table 8−12 for a complete description of the register contents.

OHCI register offset: 68h
Register type: Read/Update, Read-only
Default value: X0XX 0000h

BIT NUMBER	31	30	29	28	27	26	25	24	23	22	21	20	19	18	17	16
RESET STATE	X	0	0	0	0	0	0	0	X	X	X	X	X	X	X	X
BIT NUMBER	**15**	**14**	**13**	**12**	**11**	**10**	**9**	**8**	**7**	**6**	**5**	**4**	**3**	**2**	**1**	**0**
RESET STATE	0	0	0	0	0	0	0	0	0	0	0	0	0	0	0	0

Table 8−12. Self-ID Count Register Description

BIT	FIELD NAME	TYPE	DESCRIPTION
31	selfIDError	RU	When bit 31 is set to 1b, an error was detected during the most recent self-ID packet reception. The contents of the self-ID buffer are undefined. This bit is cleared after a self-ID reception in which no errors are detected. Note that an error can be a hardware error or a host bus write error.
30−24	RSVD	R	Reserved. Bits 30−24 return 000 0000b when read.
23−16	selfIDGeneration	RU	The value in this field increments each time a bus reset is detected. This field rolls over to 0 after reaching 255.
15−11	RSVD	R	Reserved. Bits 15−11 return 00000b when read.
10−2	selfIDSize	RU	This field indicates the number of quadlets that have been written into the self-ID buffer for the current bits 23−16 (selfIDGeneration field). This includes the header quadlet and the self-ID data. This field is cleared to 0s when the self-ID reception begins.
1−0	RSVD	R	Reserved. Bits 1 and 0 return 00b when read.

8.19 Isochronous Receive Channel Mask High Register

The isochronous receive channel mask high set/clear register enables packet receives from the upper 32 isochronous data channels. A read from either the set register or clear register returns the content of the isochronous receive channel mask high register. See Table 8−13 for a complete description of the register contents.

OHCI register offset: 70h set register
74h clear register
Register type: Read/Set/Clear
Default value: XXXX XXXXh

BIT NUMBER	31	30	29	28	27	26	25	24	23	22	21	20	19	18	17	16
RESET STATE	X	X	X	X	X	X	X	X	X	X	X	X	X	X	X	X
BIT NUMBER	**15**	**14**	**13**	**12**	**11**	**10**	**9**	**8**	**7**	**6**	**5**	**4**	**3**	**2**	**1**	**0**
RESET STATE	X	X	X	X	X	X	X	X	X	X	X	X	X	X	X	X

Table 8−13. Isochronous Receive Channel Mask High Register Description

BIT	FIELD NAME	TYPE	DESCRIPTION
31	isoChannel63	RSC	When bit 31 is set to 1b, the controller is enabled to receive from isochronous channel number 63.
30	isoChannel62	RSC	When bit 30 is set to 1b, the controller is enabled to receive from isochronous channel number 62.
29	isoChannel61	RSC	When bit 29 is set to 1b, the controller is enabled to receive from isochronous channel number 61.
28	isoChannel60	RSC	When bit 28 is set to 1b, the controller is enabled to receive from isochronous channel number 60.
27	isoChannel59	RSC	When bit 27 is set to 1b, the controller is enabled to receive from isochronous channel number 59.
26	isoChannel58	RSC	When bit 26 is set to 1b, the controller is enabled to receive from isochronous channel number 58.
25	isoChannel57	RSC	When bit 25 is set to 1b, the controller is enabled to receive from isochronous channel number 57.
24	isoChannel56	RSC	When bit 24 is set to 1b, the controller is enabled to receive from isochronous channel number 56.
23	isoChannel55	RSC	When bit 23 is set to 1b, the controller is enabled to receive from isochronous channel number 55.
22	isoChannel54	RSC	When bit 22 is set to 1b, the controller is enabled to receive from isochronous channel number 54.
21	isoChannel53	RSC	When bit 21 is set to 1b, the controller is enabled to receive from isochronous channel number 53.
20	isoChannel52	RSC	When bit 20 is set to 1b, the controller is enabled to receive from isochronous channel number 52.
19	isoChannel51	RSC	When bit 19 is set to 1b, the controller is enabled to receive from isochronous channel number 51.
18	isoChannel50	RSC	When bit 18 is set to 1b, the controller is enabled to receive from isochronous channel number 50.
17	isoChannel49	RSC	When bit 17 is set to 1b, the controller is enabled to receive from isochronous channel number 49.
16	isoChannel48	RSC	When bit 16 is set to 1b, the controller is enabled to receive from isochronous channel number 48.
15	isoChannel47	RSC	When bit 15 is set to 1b, the controller is enabled to receive from isochronous channel number 47.
14	isoChannel46	RSC	When bit 14 is set to 1b, the controller is enabled to receive from isochronous channel number 46.
13	isoChannel45	RSC	When bit 13 is set to 1b, the controller is enabled to receive from isochronous channel number 45.
12	isoChannel44	RSC	When bit 12 is set to 1b, the controller is enabled to receive from isochronous channel number 44.
11	isoChannel43	RSC	When bit 11 is set to 1b, the controller is enabled to receive from isochronous channel number 43.
10	isoChannel42	RSC	When bit 10 is set to 1b, the controller is enabled to receive from isochronous channel number 42.
9	isoChannel41	RSC	When bit 9 is set to 1b, the controller is enabled to receive from isochronous channel number 41.
8	isoChannel40	RSC	When bit 8 is set to 1b, the controller is enabled to receive from isochronous channel number 40.
7	isoChannel39	RSC	When bit 7 is set to 1b, the controller is enabled to receive from isochronous channel number 39.
6	isoChannel38	RSC	When bit 6 is set to 1b, the controller is enabled to receive from isochronous channel number 38.
5	isoChannel37	RSC	When bit 5 is set to 1b, the controller is enabled to receive from isochronous channel number 37.
4	isoChannel36	RSC	When bit 4 is set to 1b, the controller is enabled to receive from isochronous channel number 36.
3	isoChannel35	RSC	When bit 3 is set to 1b, the controller is enabled to receive from isochronous channel number 35.
2	isoChannel34	RSC	When bit 2 is set to 1b, the controller is enabled to receive from isochronous channel number 34.

Table 8−13. Isochronous Receive Channel Mask High Register Description (Continued)

BIT	FIELD NAME	TYPE	DESCRIPTION
1	isoChannel33	RSC	When bit 1 is set to 1b, the controller is enabled to receive from isochronous channel number 33.
0	isoChannel32	RSC	When bit 0 is set to 1b, the controller is enabled to receive from isochronous channel number 32.

8.20 Isochronous Receive Channel Mask Low Register

The isochronous receive channel mask low set/clear register enables packet receives from the lower 32 isochronous data channels. See Table 8−14 for a complete description of the register contents.

OHCI register offset: 78h set register
7Ch clear register
Register type: Read/Set/Clear
Default value: XXXX XXXXh

BIT NUMBER	31	30	29	28	27	26	25	24	23	22	21	20	19	18	17	16
RESET STATE	X	X	X	X	X	X	X	X	X	X	X	X	X	X	X	X
BIT NUMBER	**15**	**14**	**13**	**12**	**11**	**10**	**9**	**8**	**7**	**6**	**5**	**4**	**3**	**2**	**1**	**0**
RESET STATE	X	X	X	X	X	X	X	X	X	X	X	X	X	X	X	X

Table 8−14. Isochronous Receive Channel Mask Low Register Description

BIT	FIELD NAME	TYPE	DESCRIPTION
31	isoChannel31	RSC	When bit 31 is set to 1b, the controller is enabled to receive from isochronous channel number 31.
30	isoChannel30	RSC	When bit 30 is set to 1b, the controller is enabled to receive from isochronous channel number 30.
29−2	isoChanneln	RSC	Bits 29 through 2 (isoChanneln, where n = 29, 28, 27, …, 2) follow the same pattern as bits 31 and 30.
1	isoChannel1	RSC	When bit 1 is set to 1b, the controller is enabled to receive from isochronous channel number 1.
0	isoChannel0	RSC	When bit 0 is set to 1b, the controller is enabled to receive from isochronous channel number 0.

8.21 Interrupt Event Register

The interrupt event set/clear register reflects the state of the various PCIxx12 interrupt sources. The interrupt bits are set to 1b by an asserting edge of the corresponding interrupt signal or by writing a 1b in the corresponding bit in the set register. The only mechanism to clear a bit in this register is to write a 1b to the corresponding bit in the clear register.

This register is fully compliant with the *1394 Open Host Controller Interface Specification*, and the controller adds a vendor-specific interrupt function to bit 30. When the interrupt event register is read, the return value is the bit-wise AND function of the interrupt event and interrupt mask registers. See Table 8−15 for a complete description of the register contents.

OHCI register offset: 80h set register
84h clear register [returns the content of the interrupt event register bit-wise ANDed with the interrupt mask register when read]
Register type: Read/Set/Clear/Update, Read/Set/Clear, Read/Update, Read-only
Default value: XXXX 0XXXh

BIT NUMBER	31	30	29	28	27	26	25	24	23	22	21	20	19	18	17	16
RESET STATE	0	X	0	0	0	X	X	X	X	X	X	X	X	0	X	X
BIT NUMBER	**15**	**14**	**13**	**12**	**11**	**10**	**9**	**8**	**7**	**6**	**5**	**4**	**3**	**2**	**1**	**0**
RESET STATE	0	0	0	0	0	0	X	X	X	X	X	X	X	X	X	X

Table 8−15. Interrupt Event Register Description

BIT	FIELD NAME	TYPE	DESCRIPTION
31−30	RSVD	R	Reserved. Bits 31 and 30 return 00b when read.
29	SoftInterrupt	RSC	Bit 29 is used by software to generate a PCIxx12 interrupt for its own use.
28	RSVD	R	Reserved. Bit 28 returns 0b when read.
27	ack_tardy	RSCU	Bit 27 is set to 1b when bit 29 (AckTardyEnable) in the host controller control register at OHCI offset 50h/54h (see Section 8.16) is set to 1b and any of the following conditions occur: a. Data is present in a receive FIFO that is to be delivered to the host. b. The physical response unit is busy processing requests or sending responses. c. The controller sent an ack_tardy acknowledgment.
26	phyRegRcvd	RSCU	The controller has received a PHY register data byte which can be read from bits 23−16 in the PHY layer control register at OHCI offset ECh (see Section 8.33).
25	cycleTooLong	RSCU	If bit 21 (cycleMaster) in the link control register at OHCI offset E0h/E4h (see Section 8.31) is set to 1b, then this indicates that over 125 µs has elapsed between the start of sending a cycle start packet and the end of a subaction gap. Bit 21 (cycleMaster) in the link control register is cleared by this event.
24	unrecoverableError	RSCU	This event occurs when the controller encounters any error that forces it to stop operations on any or all of its subunits, for example, when a DMA context sets its dead bit to 1b. While bit 24 is set to 1b, all normal interrupts for the context(s) that caused this interrupt are blocked from being set to 1b.
23	cycleInconsistent	RSCU	A cycle start was received that had values for the cycleSeconds and cycleCount fields that are different from the values in bits 31−25 (cycleSeconds field) and bits 24−12 (cycleCount field) in the isochronous cycle timer register at OHCI offset F0h (see Section 8.34).
22	cycleLost	RSCU	A lost cycle is indicated when no cycle_start packet is sent or received between two successive cycleSynch events. A lost cycle can be predicted when a cycle_start packet does not immediately follow the first subaction gap after the cycleSynch event or if an arbitration reset gap is detected after a cycleSynch event without an intervening cycle start. Bit 22 may be set to 1b either when a lost cycle occurs or when logic predicts that one will occur.
21	cycle64Seconds	RSCU	Indicates that the seventh bit of the cycle second counter has changed.
20	cycleSynch	RSCU	Indicates that a new isochronous cycle has started. Bit 20 is set to 1b when the low-order bit of the cycle count toggles.

Table 8−15. Interrupt Event Register Description (Continued)

BIT	FIELD NAME	TYPE	DESCRIPTION
19	phy	RSCU	Indicates that the PHY layer requests an interrupt through a status transfer.
18	regAccessFail	RSCU	Indicates that a PCIxx12 register access has failed due to a missing SCLK clock signal from the PHY layer. When a register access fails, bit 18 is set to 1b before the next register access.
17	busReset	RSCU	Indicates that the PHY layer has entered bus reset mode.
16	selfIDcomplete	RSCU	A self-ID packet stream has been received. It is generated at the end of the bus initialization process. Bit 16 is turned off simultaneously when bit 17 (busReset) is turned on.
15	selfIDcomplete2	RSCU	Secondary indication of the end of a self-ID packet stream. Bit 15 is set to 1b by the controller when it sets bit 16 (selfIDcomplete), and retains the state, independent of bit 17 (busReset).
14−10	RSVD	R	Reserved. Bits 14−10 return 00000b when read.
9	lockRespErr	RSCU	Indicates that the controller sent a lock response for a lock request to a serial bus register, but did not receive an ack_complete.
8	postedWriteErr	RSCU	Indicates that a host bus error occurred while the controller was trying to write a 1394 write request, which had already been given an ack_complete, into system memory.
7	isochRx	RU	Isochronous receive DMA interrupt. Indicates that one or more isochronous receive contexts have generated an interrupt. This is not a latched event; it is the logical OR of all bits in the isochronous receive interrupt event register at OHCI offset A0h/A4h (see Section 8.25) and isochronous receive interrupt mask register at OHCI offset A8h/ACh (see Section 8.26). The isochronous receive interrupt event register indicates which contexts have been interrupted.
6	isochTx	RU	Isochronous transmit DMA interrupt. Indicates that one or more isochronous transmit contexts have generated an interrupt. This is not a latched event; it is the logical OR of all bits in the isochronous transmit interrupt event register at OHCI offset 90h/94h (see Section 8.23) and isochronous transmit interrupt mask register at OHCI offset 98h/9Ch (see Section 8.24). The isochronous transmit interrupt event register indicates which contexts have been interrupted.
5	RSPkt	RSCU	Indicates that a packet was sent to an asynchronous receive response context buffer and the descriptor xferStatus and resCount fields have been updated.
4	RQPkt	RSCU	Indicates that a packet was sent to an asynchronous receive request context buffer and the descriptor xferStatus and resCount fields have been updated.
3	ARRS	RSCU	Asynchronous receive response DMA interrupt. Bit 3 is conditionally set to 1b upon completion of an ARRS DMA context command descriptor.
2	ARRQ	RSCU	Asynchronous receive request DMA interrupt. Bit 2 is conditionally set to 1b upon completion of an ARRQ DMA context command descriptor.
1	respTxComplete	RSCU	Asynchronous response transmit DMA interrupt. Bit 1 is conditionally set to 1b upon completion of an ATRS DMA command.
0	reqTxComplete	RSCU	Asynchronous request transmit DMA interrupt. Bit 0 is conditionally set to 1b upon completion of an ATRQ DMA command.

8.22 Interrupt Mask Register

The interrupt mask set/clear register enables the various PCIxx12 interrupt sources. Reads from either the set register or the clear register always return the contents of the interrupt mask register. In all cases except masterIntEnable (bit 31) and vendorSpecific (bit 30), the enables for each interrupt event align with the interrupt event register bits detailed in Table 8−15.

This register is fully compliant with the *1394 Open Host Controller Interface Specification* and the controller adds an interrupt function to bit 30. See Table 8−16 for a complete description of bits 31 and 30.

OHCI register offset: 88h set register
8Ch clear register
Register type: Read/Set/Clear/Update, Read/Set/Clear, Read/Update, Read-only
Default value: XXXX 0XXXh

BIT NUMBER	31	30	29	28	27	26	25	24	23	22	21	20	19	18	17	16
RESET STATE	X	X	0	0	0	X	X	X	X	X	X	X	X	0	X	X
BIT NUMBER	**15**	**14**	**13**	**12**	**11**	**10**	**9**	**8**	**7**	**6**	**5**	**4**	**3**	**2**	**1**	**0**
RESET STATE	0	0	0	0	0	0	X	X	X	X	X	X	X	X	X	X

Table 8−16. Interrupt Mask Register Description

BIT	FIELD NAME	TYPE	DESCRIPTION
31	masterIntEnable	RSCU	Master interrupt enable. If bit 31 is set to 1b, then external interrupts are generated in accordance with the interrupt mask register. If this bit is cleared, then external interrupts are not generated regardless of the interrupt mask register settings.
30	VendorSpecific	RSC	When this bit and bit 30 (vendorSpecific) in the interrupt event register at OHCI offset 80h/84h (see Section 8.21) are set to 11b, this vendor-specific interrupt mask enables interrupt generation.
29	SoftInterrupt	RSC	When this bit and bit 29 (SoftInterrupt) in the interrupt event register at OHCI offset 80h/84h (see Section 8.21) are set to 11b, this soft-interrupt mask enables interrupt generation.
28	RSVD	R	Reserved. Bit 28 returns 0b when read.
27	ack_tardy	RSC	When this bit and bit 27 (ack_tardy) in the interrupt event register at OHCI offset 80h/84h (see Section 8.21) are set to 11b, this acknowledge-tardy interrupt mask enables interrupt generation.
26	phyRegRcvd	RSC	When this bit and bit 26 (phyRegRcvd) in the interrupt event register at OHCI offset 80h/84h (see Section 8.21) are set to 11b, this PHY-register interrupt mask enables interrupt generation.
25	cycleTooLong	RSC	When this bit and bit 25 (cycleTooLong) in the interrupt event register at OHCI offset 80h/84h (see Section 8.21) are set to 11b, this cycle-too-long interrupt mask enables interrupt generation.
24	unrecoverableError	RSC	When this bit and bit 24 (unrecoverableError) in the interrupt event register at OHCI offset 80h/84h (see Section 8.21) are set to 11b, this unrecoverable-error interrupt mask enables interrupt generation.
23	cycleInconsistent	RSC	When this bit and bit 23 (cycleInconsistent) in the interrupt event register at OHCI offset 80h/84h (see Section 8.21) are set to 11b, this inconsistent-cycle interrupt mask enables interrupt generation.
22	cycleLost	RSC	When this bit and bit 22 (cycleLost) in the interrupt event register at OHCI offset 80h/84h (see Section 8.21) are set to 11b, this lost-cycle interrupt mask enables interrupt generation.
21	cycle64Seconds	RSC	When this bit and bit 21 (cycle64Seconds) in the interrupt event register at OHCI offset 80h/84h (see Section 8.21) are set to 11b, this 64-second-cycle interrupt mask enables interrupt generation.
20	cycleSynch	RSC	When this bit and bit 20 (cycleSynch) in the interrupt event register at OHCI offset 80h/84h (see Section 8.21) are set to 11b, this isochronous-cycle interrupt mask enables interrupt generation.
19	phy	RSC	When this bit and bit 19 (phy) in the interrupt event register at OHCI offset 80h/84h (see Section 8.21) are set to 11b, this PHY-status-transfer interrupt mask enables interrupt generation.
18	regAccessFail	RSC	When this bit and bit 18 (regAccessFail) in the interrupt event register at OHCI offset 80h/84h (see Section 8.21) are set to 11b, this register-access-failed interrupt mask enables interrupt generation.
17	busReset	RSC	When this bit and bit 17 (busReset) in the interrupt event register at OHCI offset 80h/84h (see Section 8.21) are set to 11b, this bus-reset interrupt mask enables interrupt generation.

Table 8−16. Interrupt Mask Register Description (Continued)

BIT	FIELD NAME	TYPE	DESCRIPTION
16	selfIDcomplete	RSC	When this bit and bit 16 (selfIDcomplete) in the interrupt event register at OHCI offset 80h/84h (see Section 8.21) are set to 11b, this self-ID-complete interrupt mask enables interrupt generation.
15	selfIDcomplete2	RSC	When this bit and bit 15 (selfIDcomplete2) in the interrupt event register at OHCI offset 80h/84h (see Section 8.21) are set to 11b, this second-self-ID-complete interrupt mask enables interrupt generation.
14−10	RSVD	R	Reserved. Bits 14−10 return 00000b when read.
9	lockRespErr	RSC	When this bit and bit 9 (lockRespErr) in the interrupt event register at OHCI offset 80h/84h (see Section 8.21) are set to 11b, this lock-response-error interrupt mask enables interrupt generation.
8	postedWriteErr	RSC	When this bit and bit 8 (postedWriteErr) in the interrupt event register at OHCI offset 80h/84h (see Section 8.21) are set to 11b, this posted-write-error interrupt mask enables interrupt generation.
7	isochRx	RSC	When this bit and bit 7 (isochRx) in the interrupt event register at OHCI offset 80h/84h (see Section 8.21) are set to 11b, this isochronous-receive-DMA interrupt mask enables interrupt generation.
6	isochTx	RSC	When this bit and bit 6 (isochTx) in the interrupt event register at OHCI offset 80h/84h (see Section 8.21) are set to 11b, this isochronous-transmit-DMA interrupt mask enables interrupt generation.
5	RSPkt	RSC	When this bit and bit 5 (RSPkt) in the interrupt event register at OHCI offset 80h/84h (see Section 8.21) are set to 11b, this receive-response-packet interrupt mask enables interrupt generation.
4	RQPkt	RSC	When this bit and bit 4 (RQPkt) in the interrupt event register at OHCI offset 80h/84h (see Section 8.21) are set to 11b, this receive-request-packet interrupt mask enables interrupt generation.
3	ARRS	RSC	When this bit and bit 3 (ARRS) in the interrupt event register at OHCI offset 80h/84h (see Section 8.21) are set to 11b, this asynchronous-receive-response-DMA interrupt mask enables interrupt generation.
2	ARRQ	RSC	When this bit and bit 2 (ARRQ) in the interrupt event register at OHCI offset 80h/84h (see Section 8.21) are set to 11b, this asynchronous-receive-request-DMA interrupt mask enables interrupt generation.
1	respTxComplete	RSC	When this bit and bit 1 (respTxComplete) in the interrupt event register at OHCI offset 80h/84h (see Section 8.21) are set to 11b, this response-transmit-complete interrupt mask enables interrupt generation.
0	reqTxComplete	RSC	When this bit and bit 0 (reqTxComplete) in the interrupt event register at OHCI offset 80h/84h (see Section 8.21) are set to 11b, this request-transmit-complete interrupt mask enables interrupt generation.

8.23 Isochronous Transmit Interrupt Event Register

The isochronous transmit interrupt event set/clear register reflects the interrupt state of the isochronous transmit contexts. An interrupt is generated on behalf of an isochronous transmit context if an OUTPUT_LAST* command completes and its interrupt bits are set to 1b. Upon determining that the isochTx (bit 6) interrupt has occurred in the interrupt event register at OHCI offset 80h/84h (see Section 8.21), software can check this register to determine which context(s) caused the interrupt. The interrupt bits are set to 1b by an asserting edge of the corresponding interrupt signal, or by writing a 1b in the corresponding bit in the set register. The only mechanism to clear a bit in this register is to write a 1b to the corresponding bit in the clear register. See Table 8−17 for a complete description of the register contents.

OHCI register offset: 90h set register
94h clear register [returns the contents of the isochronous transmit interrupt event register bit-wise ANDed with the isochronous transmit interrupt mask register when read]
Register type: Read/Set/Clear, Read-only
Default value: 0000 00XXh

BIT NUMBER	31	30	29	28	27	26	25	24	23	22	21	20	19	18	17	16
RESET STATE	0	0	0	0	0	0	0	0	0	0	0	0	0	0	0	0
BIT NUMBER	**15**	**14**	**13**	**12**	**11**	**10**	**9**	**8**	**7**	**6**	**5**	**4**	**3**	**2**	**1**	**0**
RESET STATE	0	0	0	0	0	0	0	0	X	X	X	X	X	X	X	X

Table 8−17. Isochronous Transmit Interrupt Event Register Description

BIT	FIELD NAME	TYPE	DESCRIPTION
31−8	RSVD	R	Reserved. Bits 31−8 return 00 0000h when read.
7	isoXmit7	RSC	Isochronous transmit channel 7 caused the interrupt event register bit 6 (isochTx) interrupt.
6	isoXmit6	RSC	Isochronous transmit channel 6 caused the interrupt event register bit 6 (isochTx) interrupt.
5	isoXmit5	RSC	Isochronous transmit channel 5 caused the interrupt event register bit 6 (isochTx) interrupt.
4	isoXmit4	RSC	Isochronous transmit channel 4 caused the interrupt event register bit 6 (isochTx) interrupt.
3	isoXmit3	RSC	Isochronous transmit channel 3 caused the interrupt event register bit 6 (isochTx) interrupt.
2	isoXmit2	RSC	Isochronous transmit channel 2 caused the interrupt event register bit 6 (isochTx) interrupt.
1	isoXmit1	RSC	Isochronous transmit channel 1 caused the interrupt event register bit 6 (isochTx) interrupt.
0	isoXmit0	RSC	Isochronous transmit channel 0 caused the interrupt event register bit 6 (isochTx) interrupt.

8.24 Isochronous Transmit Interrupt Mask Register

The isochronous transmit interrupt mask set/clear register enables the isochTx interrupt source on a per-channel basis. Reads from either the set register or the clear register always return the contents of the isochronous transmit interrupt mask register. In all cases the enables for each interrupt event align with the isochronous transmit interrupt event register bits detailed in Table 8−17.

OHCI register offset: 98h set register
9Ch clear register
Register type: Read/Set/Clear, Read-only
Default value: 0000 00XXh

BIT NUMBER	31	30	29	28	27	26	25	24	23	22	21	20	19	18	17	16
RESET STATE	0	0	0	0	0	0	0	0	0	0	0	0	0	0	0	0
BIT NUMBER	**15**	**14**	**13**	**12**	**11**	**10**	**9**	**8**	**7**	**6**	**5**	**4**	**3**	**2**	**1**	**0**
RESET STATE	0	0	0	0	0	0	0	0	X	X	X	X	X	X	X	X

8.25 Isochronous Receive Interrupt Event Register

The isochronous receive interrupt event set/clear register reflects the interrupt state of the isochronous receive contexts. An interrupt is generated on behalf of an isochronous receive context if an INPUT_* command completes and its interrupt bits are set to 1b. Upon determining that the isochRx (bit 7) interrupt in the interrupt event register at OHCI offset 80h/84h (see Section 8.21) has occurred, software can check this register to determine which context(s) caused the interrupt. The interrupt bits are set to 1b by an asserting edge of the corresponding interrupt signal or by writing a 1b in the corresponding bit in the set register. The only mechanism to clear a bit in this register is to write a 1b to the corresponding bit in the clear register. See Table 8−18 for a complete description of the register contents.

OHCI register offset: A0h set register
A4h clear register [returns the contents of isochronous receive interrupt event register bit-wise ANDed with the isochronous receive mask register when read]
Register type: Read/Set/Clear, Read-only
Default value: 0000 000Xh

BIT NUMBER	31	30	29	28	27	26	25	24	23	22	21	20	19	18	17	16
RESET STATE	0	0	0	0	0	0	0	0	0	0	0	0	0	0	0	0
BIT NUMBER	**15**	**14**	**13**	**12**	**11**	**10**	**9**	**8**	**7**	**6**	**5**	**4**	**3**	**2**	**1**	**0**
RESET STATE	0	0	0	0	0	0	0	0	0	0	0	0	X	X	X	X

Table 8−18. Isochronous Receive Interrupt Event Register Description

BIT	FIELD NAME	TYPE	DESCRIPTION
31−4	RSVD	R	Reserved. Bits 31−4 return 000 0000h when read.
3	isoRecv3	RSC	Isochronous receive channel 3 caused the interrupt event register bit 7 (isochRx) interrupt.
2	isoRecv2	RSC	Isochronous receive channel 2 caused the interrupt event register bit 7 (isochRx) interrupt.
1	isoRecv1	RSC	Isochronous receive channel 1 caused the interrupt event register bit 7 (isochRx) interrupt.
0	isoRecv0	RSC	Isochronous receive channel 0 caused the interrupt event register bit 7 (isochRx) interrupt.

8.26 Isochronous Receive Interrupt Mask Register

The isochronous receive interrupt mask set/clear register enables the isochRx interrupt source on a per-channel basis. Reads from either the set register or the clear register always return the contents of the isochronous receive interrupt mask register. In all cases the enables for each interrupt event align with the isochronous receive interrupt event register bits detailed in Table 8−18.

OHCI register offset: A8h set register
ACh clear register
Register type: Read/Set/Clear, Read-only
Default value: 0000 000Xh

BIT NUMBER	31	30	29	28	27	26	25	24	23	22	21	20	19	18	17	16
RESET STATE	0	0	0	0	0	0	0	0	0	0	0	0	0	0	0	0
BIT NUMBER	**15**	**14**	**13**	**12**	**11**	**10**	**9**	**8**	**7**	**6**	**5**	**4**	**3**	**2**	**1**	**0**
RESET STATE	0	0	0	0	0	0	0	0	0	0	0	0	X	X	X	X

8.27 Initial Bandwidth Available Register

The initial bandwidth available register value is loaded into the corresponding bus management CSR register on a system (hardware) or software reset. See Table 8−19 for a complete description of the register contents.

OHCI register offset: B0h
Register type: Read-only, Read/Write
Default value: 0000 1333h

BIT NUMBER	31	30	29	28	27	26	25	24	23	22	21	20	19	18	17	16
RESET STATE	0	0	0	0	0	0	0	0	0	0	0	0	0	0	0	0
BIT NUMBER	**15**	**14**	**13**	**12**	**11**	**10**	**9**	**8**	**7**	**6**	**5**	**4**	**3**	**2**	**1**	**0**
RESET STATE	0	0	0	1	0	0	1	1	0	0	1	1	0	0	1	1

Table 8−19. Initial Bandwidth Available Register Description

BIT	FIELD NAME	TYPE	DESCRIPTION
31−13	RSVD	R	Reserved. Bits 31−13 return 0s when read.
12−0	InitBWAvailable	RW	This field is reset to 1333h on a system (hardware) or software reset, and is not affected by a 1394 bus reset. The value of this field is loaded into the BANDWIDTH_AVAILABLE CSR register upon a $\overline{\text{GRST}}$, $\overline{\text{PRST}}$, or a 1394 bus reset.

8.28 Initial Channels Available High Register

The initial channels available high register value is loaded into the corresponding bus management CSR register on a system (hardware) or software reset. See Table 8−20 for a complete description of the register contents.

OHCI register offset: B4h
Register type: Read/Write
Default value: FFFF FFFFh

BIT NUMBER	31	30	29	28	27	26	25	24	23	22	21	20	19	18	17	16
RESET STATE	1	1	1	1	1	1	1	1	1	1	1	1	1	1	1	1
BIT NUMBER	**15**	**14**	**13**	**12**	**11**	**10**	**9**	**8**	**7**	**6**	**5**	**4**	**3**	**2**	**1**	**0**
RESET STATE	1	1	1	1	1	1	1	1	1	1	1	1	1	1	1	1

Table 8−20. Initial Channels Available High Register Description

BIT	FIELD NAME	TYPE	DESCRIPTION
31−0	InitChanAvailHi	RW	This field is reset to FFFF_FFFFh on a system (hardware) or software reset, and is not affected by a 1394 bus reset. The value of this field is loaded into the CHANNELS_AVAILABLE_HI CSR register upon a $\overline{\text{GRST}}$, $\overline{\text{PRST}}$, or a 1394 bus reset.

8.29 Initial Channels Available Low Register

The initial channels available low register value is loaded into the corresponding bus management CSR register on a system (hardware) or software reset. See Table 8−21 for a complete description of the register contents.

OHCI register offset: B8h
Register type: Read/Write
Default value: FFFF FFFFh

BIT NUMBER	31	30	29	28	27	26	25	24	23	22	21	20	19	18	17	16
RESET STATE	1	1	1	1	1	1	1	1	1	1	1	1	1	1	1	1
BIT NUMBER	**15**	**14**	**13**	**12**	**11**	**10**	**9**	**8**	**7**	**6**	**5**	**4**	**3**	**2**	**1**	**0**
RESET STATE	1	1	1	1	1	1	1	1	1	1	1	1	1	1	1	1

Table 8−21. Initial Channels Available Low Register Description

BIT	FIELD NAME	TYPE	DESCRIPTION
31−0	InitChanAvailLo	RW	This field is reset to FFFF_FFFFh on a system (hardware) or software reset, and is not affected by a 1394 bus reset. The value of this field is loaded into the CHANNELS_AVAILABLE_LO CSR register upon a $\overline{\text{GRST}}$, $\overline{\text{PRST}}$, or a 1394 bus reset.

8.30 Fairness Control Register

The fairness control register provides a mechanism by which software can direct the host controller to transmit multiple asynchronous requests during a fairness interval. See Table 8−22 for a complete description of the register contents.

OHCI register offset: DCh
Register type: Read-only
Default value: 0000 0000h

BIT NUMBER	31	30	29	28	27	26	25	24	23	22	21	20	19	18	17	16
RESET STATE	0	0	0	0	0	0	0	0	0	0	0	0	0	0	0	0
BIT NUMBER	**15**	**14**	**13**	**12**	**11**	**10**	**9**	**8**	**7**	**6**	**5**	**4**	**3**	**2**	**1**	**0**
RESET STATE	0	0	0	0	0	0	0	0	0	0	0	0	0	0	0	0

Table 8−22. Fairness Control Register Description

BIT	FIELD NAME	TYPE	DESCRIPTION
31−8	RSVD	R	Reserved. Bits 31−8 return 00 0000h when read.
7−0	pri_req	RW	This field specifies the maximum number of priority arbitration requests for asynchronous request packets that the link is permitted to make of the PHY layer during a fairness interval. The default value for this field is 00h.

8.31 Link Control Register

The link control set/clear register provides the control flags that enable and configure the link core protocol portions of the controller. It contains controls for the receiver and cycle timer. See Table 8−23 for a complete description of the register contents.

OHCI register offset: E0h set register
E4h clear register
Register type: Read/Set/Clear/Update, Read/Set/Clear, Read-only
Default value: 00X0 0X00h

BIT NUMBER	31	30	29	28	27	26	25	24	23	22	21	20	19	18	17	16
RESET STATE	0	0	0	0	0	0	0	0	0	X	X	X	0	0	0	0
BIT NUMBER	**15**	**14**	**13**	**12**	**11**	**10**	**9**	**8**	**7**	**6**	**5**	**4**	**3**	**2**	**1**	**0**
RESET STATE	0	0	0	0	0	X	X	0	0	0	0	0	0	0	0	0

Table 8−23. Link Control Register Description

BIT	FIELD NAME	TYPE	DESCRIPTION
31−23	RSVD	R	Reserved. Bits 31−23 return 0 0000 0000b when read.
22	cycleSource	RSC	When bit 22 is set to 1b, the cycle timer uses an external source (CYCLEIN) to determine when to roll over the cycle timer. When this bit is cleared, the cycle timer rolls over when the timer reaches 3072 cycles of the 24.576-MHz clock (125 µs).
21	cycleMaster	RSCU	When bit 21 is set to 1b, the controller is root and it generates a cycle start packet every time the cycle timer rolls over, based on the setting of bit 22 (cycleSource). When bit 21 is cleared, the OHCI-Lynx™ accepts received cycle start packets to maintain synchronization with the node which is sending them. Bit 21 is automatically cleared when bit 25 (cycleTooLong) in the interrupt event register at OHCI offset 80h/84h (see Section 8.21) is set to 1b. Bit 21 cannot be set to 1b until bit 25 (cycleTooLong) is cleared.
20	CycleTimerEnable	RSC	When bit 20 is set to 1b, the cycle timer offset counts cycles of the 24.576-MHz clock and rolls over at the appropriate time, based on the settings of the above bits. When this bit is cleared, the cycle timer offset does not count.
19−11	RSVD	R	Reserved. Bits 19−11 return 0 0000 0000b when read.
10	RcvPhyPkt	RSC	When bit 10 is set to 1b, the receiver accepts incoming PHY packets into the AR request context if the AR request context is enabled. This bit does not control receipt of self-identification packets.
9	RcvSelfID	RSC	When bit 9 is set to 1b, the receiver accepts incoming self-identification packets. Before setting this bit to 1b, software must ensure that the self-ID buffer pointer register contains a valid address.
8−7	RSVD	R	Reserved. Bits 8 and 7 return 00b when read.
6 ‡	tag1SyncFilterLock	RS	When bit 6 is set to 1b, bit 6 (tag1SyncFilter) in the isochronous receive context match register (see Section 8.46) is set to 1b for all isochronous receive contexts. When bit 6 is cleared, bit 6 (tag1SyncFilter) in the isochronous receive context match register has read/write access. This bit is cleared when $\overline{\text{GRST}}$ is asserted.
5−0	RSVD	R	Reserved. Bits 5−0 return 00 0000b when read.

‡ This bit is cleared only by the assertion of $\overline{\text{GRST}}$.

8.32 Node Identification Register

The node identification register contains the address of the node on which the OHCI-Lynx™ chip resides, and indicates the valid node number status. The 16-bit combination of the busNumber field (bits 15−6) and the NodeNumber field (bits 5−0) is referred to as the node ID. See Table 8−24 for a complete description of the register contents.

OHCI register offset: E8h
Register type: Read/Write/Update, Read/Update, Read-only
Default value: 0000 FFXXh

BIT NUMBER	31	30	29	28	27	26	25	24	23	22	21	20	19	18	17	16
RESET STATE	0	0	0	0	0	0	0	0	0	0	0	0	0	0	0	0
BIT NUMBER	**15**	**14**	**13**	**12**	**11**	**10**	**9**	**8**	**7**	**6**	**5**	**4**	**3**	**2**	**1**	**0**
RESET STATE	1	1	1	1	1	1	1	1	1	1	X	X	X	X	X	X

Table 8−24. Node Identification Register Description

BIT	FIELD NAME	TYPE	DESCRIPTION
31	iDValid	RU	Bit 31 indicates whether or not the controller has a valid node number. It is cleared when a 1394 bus reset is detected and set to 1b when the controller receives a new node number from its PHY layer.
30	root	RU	Bit 30 is set to 1b during the bus reset process if the attached PHY layer is root.
29−28	RSVD	R	Reserved. Bits 29 and 28 return 00b when read.
27	CPS	RU	Bit 27 is set to 1b if the PHY layer is reporting that cable power status is OK.
26−16	RSVD	R	Reserved. Bits 26−16 return 0s when read.
15−6	busNumber	RWU	This field identifies the specific 1394 bus the controller belongs to when multiple 1394-compatible buses are connected via a bridge. The default value for this field is 11 1111 1111b.
5−0	NodeNumber	RU	This field is the physical node number established by the PHY layer during self-identification. It is automatically set to the value received from the PHY layer after the self-identification phase. If the PHY layer sets the nodeNumber to 63, then software must not set bit 15 (run) in the asynchronous context control register (see Section 8.40) for either of the AT DMA contexts.

8.33 PHY Layer Control Register

The PHY layer control register reads from or writes to a PHY register. See Table 8−25 for a complete description of the register contents.

OHCI register offset: ECh
Register type: Read/Write/Update, Read/Write, Read/Update, Read-only
Default value: 0000 0000h

BIT NUMBER	31	30	29	28	27	26	25	24	23	22	21	20	19	18	17	16
RESET STATE	0	0	0	0	0	0	0	0	0	0	0	0	0	0	0	0
BIT NUMBER	**15**	**14**	**13**	**12**	**11**	**10**	**9**	**8**	**7**	**6**	**5**	**4**	**3**	**2**	**1**	**0**
RESET STATE	0	0	0	0	0	0	0	0	0	0	0	0	0	0	0	0

Table 8−25. PHY Control Register Description

BIT	FIELD NAME	TYPE	DESCRIPTION
31	rdDone	RU	Bit 31 is cleared to 0b by the controller when either bit 15 (rdReg) or bit 14 (wrReg) is set to 1b. This bit is set to 1b when a register transfer is received from the PHY layer.
30−28	RSVD	R	Reserved. Bits 30−28 return 000b when read.
27−24	rdAddr	RU	This field is the address of the register most recently received from the PHY layer.
23−16	rdData	RU	This field is the contents of a PHY register that has been read.
15	rdReg	RWU	Bit 15 is set to 1b by software to initiate a read request to a PHY register, and is cleared by hardware when the request has been sent. Bits 14 (wrReg) and 15 (rdReg) must not both be set to 1b simultaneously.
14	wrReg	RWU	Bit 14 is set to 1b by software to initiate a write request to a PHY register, and is cleared by hardware when the request has been sent. Bits 14 (wrReg) and 15 (rdReg) must not both be set to 1b simultaneously.
13−12	RSVD	R	Reserved. Bits 13 and 12 return 00b when read.
11−8	regAddr	RW	This field is the address of the PHY register to be written or read. The default value for this field is 0h.
7−0	wrData	RW	This field is the data to be written to a PHY register and is ignored for reads. The default value for this field is 00h.

8.34 Isochronous Cycle Timer Register

The isochronous cycle timer register indicates the current cycle number and offset. When the controller is cycle master, this register is transmitted with the cycle start message. When the controller is not cycle master, this register is loaded with the data field in an incoming cycle start. In the event that the cycle start message is not received, the fields can continue incrementing on their own (if programmed) to maintain a local time reference. See Table 8−26 for a complete description of the register contents.

OHCI register offset: F0h
Register type: Read/Write/Update
Default value: XXXX XXXXh

BIT NUMBER	31	30	29	28	27	26	25	24	23	22	21	20	19	18	17	16
RESET STATE	X	X	X	X	X	X	X	X	X	X	X	X	X	X	X	X
BIT NUMBER	**15**	**14**	**13**	**12**	**11**	**10**	**9**	**8**	**7**	**6**	**5**	**4**	**3**	**2**	**1**	**0**
RESET STATE	X	X	X	X	X	X	X	X	X	X	X	X	X	X	X	X

Table 8−26. Isochronous Cycle Timer Register Description

BIT	FIELD NAME	TYPE	DESCRIPTION
31−25	cycleSeconds	RWU	This field counts seconds [rollovers from bits 24−12 (cycleCount field)] modulo 128.
24−12	cycleCount	RWU	This field counts cycles [rollovers from bits 11−0 (cycleOffset field)] modulo 8000.
11−0	cycleOffset	RWU	This field counts 24.576-MHz clocks modulo 3072, that is, 125 µs. If an external 8-kHz clock configuration is being used, then this field must be cleared to 000h at each tick of the external clock.

8.35 Asynchronous Request Filter High Register

The asynchronous request filter high set/clear register enables asynchronous receive requests on a per-node basis, and handles the upper node IDs. When a packet is destined for either the physical request context or the ARRQ context, the source node ID is examined. If the bit corresponding to the node ID is not set to 1b in this register, then the packet is not acknowledged and the request is not queued. The node ID comparison is done if the source node is on the same bus as the controller. Nonlocal bus-sourced packets are not acknowledged unless bit 31 in this register is set to 1b. See Table 8−27 for a complete description of the register contents.

OHCI register offset: 100h set register
104h clear register
Register type: Read/Set/Clear
Default value: 0000 0000h

BIT NUMBER	31	30	29	28	27	26	25	24	23	22	21	20	19	18	17	16
RESET STATE	0	0	0	0	0	0	0	0	0	0	0	0	0	0	0	0
BIT NUMBER	**15**	**14**	**13**	**12**	**11**	**10**	**9**	**8**	**7**	**6**	**5**	**4**	**3**	**2**	**1**	**0**
RESET STATE	0	0	0	0	0	0	0	0	0	0	0	0	0	0	0	0

Table 8−27. Asynchronous Request Filter High Register Description

BIT	FIELD NAME	TYPE	DESCRIPTION
31	asynReqAllBuses	RSC	If bit 31 is set to 1b, all asynchronous requests received by the controller from nonlocal bus nodes are accepted.
30	asynReqResource62	RSC	If bit 30 is set to 1b for local bus node number 62, asynchronous requests received by the controller from that node are accepted.
29	asynReqResource61	RSC	If bit 29 is set to 1b for local bus node number 61, asynchronous requests received by the controller from that node are accepted.
28	asynReqResource60	RSC	If bit 28 is set to 1b for local bus node number 60, asynchronous requests received by the controller from that node are accepted.
27	asynReqResource59	RSC	If bit 27 is set to 1b for local bus node number 59, asynchronous requests received by the controller from that node are accepted.
26	asynReqResource58	RSC	If bit 26 is set to 1b for local bus node number 58, asynchronous requests received by the controller from that node are accepted.
25	asynReqResource57	RSC	If bit 25 is set to 1b for local bus node number 57, asynchronous requests received by the controller from that node are accepted.
24	asynReqResource56	RSC	If bit 24 is set to 1b for local bus node number 56, asynchronous requests received by the controller from that node are accepted.
23	asynReqResource55	RSC	If bit 23 is set to 1b for local bus node number 55, asynchronous requests received by the controller from that node are accepted.
22	asynReqResource54	RSC	If bit 22 is set to 1b for local bus node number 54, asynchronous requests received by the controller from that node are accepted.
21	asynReqResource53	RSC	If bit 21 is set to 1b for local bus node number 53, asynchronous requests received by the controller from that node are accepted.
20	asynReqResource52	RSC	If bit 20 is set to 1b for local bus node number 52, asynchronous requests received by the controller from that node are accepted.
19	asynReqResource51	RSC	If bit 19 is set to 1b for local bus node number 51, asynchronous requests received by the controller from that node are accepted.
18	asynReqResource50	RSC	If bit 18 is set to 1b for local bus node number 50, asynchronous requests received by the controller from that node are accepted.
17	asynReqResource49	RSC	If bit 17 is set to 1b for local bus node number 49, asynchronous requests received by the controller from that node are accepted.

Table 8−27. Asynchronous Request Filter High Register Description (Continued)

BIT	FIELD NAME	TYPE	DESCRIPTION
16	asynReqResource48	RSC	If bit 16 is set to 1b for local bus node number 48, asynchronous requests received by the controller from that node are accepted.
15	asynReqResource47	RSC	If bit 15 is set to 1b for local bus node number 47, asynchronous requests received by the controller from that node are accepted.
14	asynReqResource46	RSC	If bit 14 is set to 1b for local bus node number 46, asynchronous requests received by the controller from that node are accepted.
13	asynReqResource45	RSC	If bit 13 is set to 1b for local bus node number 45, asynchronous requests received by the controller from that node are accepted.
12	asynReqResource44	RSC	If bit 12 is set to 1b for local bus node number 44, asynchronous requests received by the controller from that node are accepted.
11	asynReqResource43	RSC	If bit 11 is set to 1b for local bus node number 43, asynchronous requests received by the controller from that node are accepted.
10	asynReqResource42	RSC	If bit 10 is set to 1b for local bus node number 42, asynchronous requests received by the controller from that node are accepted.
9	asynReqResource41	RSC	If bit 9 is set to 1b for local bus node number 41, asynchronous requests received by the controller from that node are accepted.
8	asynReqResource40	RSC	If bit 8 is set to 1b for local bus node number 40, asynchronous requests received by the controller from that node are accepted.
7	asynReqResource39	RSC	If bit 7 is set to 1b for local bus node number 39, asynchronous requests received by the controller from that node are accepted.
6	asynReqResource38	RSC	If bit 6 is set to 1b for local bus node number 38, asynchronous requests received by the controller from that node are accepted.
5	asynReqResource37	RSC	If bit 5 is set to 1b for local bus node number 37, asynchronous requests received by the controller from that node are accepted.
4	asynReqResource36	RSC	If bit 4 is set to 1b for local bus node number 36, asynchronous requests received by the controller from that node are accepted.
3	asynReqResource35	RSC	If bit 3 is set to 1b for local bus node number 35, asynchronous requests received by the controller from that node are accepted.
2	asynReqResource34	RSC	If bit 2 is set to 1b for local bus node number 34, asynchronous requests received by the controller from that node are accepted.
1	asynReqResource33	RSC	If bit 1 is set to 1b for local bus node number 33, asynchronous requests received by the controller from that node are accepted.
0	asynReqResource32	RSC	If bit 0 is set to 1b for local bus node number 32, asynchronous requests received by the controller from that node are accepted.

8.36 Asynchronous Request Filter Low Register

The asynchronous request filter low set/clear register enables asynchronous receive requests on a per-node basis, and handles the lower node IDs. Other than filtering different node IDs, this register behaves identically to the asynchronous request filter high register. See Table 8−28 for a complete description of the register contents.

OHCI register offset: 108h set register
10Ch clear register
Register type: Read/Set/Clear
Default value: 0000 0000h

BIT NUMBER	31	30	29	28	27	26	25	24	23	22	21	20	19	18	17	16
RESET STATE	0	0	0	0	0	0	0	0	0	0	0	0	0	0	0	0
BIT NUMBER	**15**	**14**	**13**	**12**	**11**	**10**	**9**	**8**	**7**	**6**	**5**	**4**	**3**	**2**	**1**	**0**
RESET STATE	0	0	0	0	0	0	0	0	0	0	0	0	0	0	0	0

Table 8−28. Asynchronous Request Filter Low Register Description

BIT	FIELD NAME	TYPE	DESCRIPTION
31	asynReqResource31	RSC	If bit 31 is set to 1b for local bus node number 31, asynchronous requests received by the controller from that node are accepted.
30	asynReqResource30	RSC	If bit 30 is set to 1b for local bus node number 30, asynchronous requests received by the controller from that node are accepted.
29−2	asynReqResourcen	RSC	Bits 29 through 2 (asynReqResourcen, where n = 29, 28, 27, …, 2) follow the same pattern as bits 31 and 30.
1	asynReqResource1	RSC	If bit 1 is set to 1b for local bus node number 1, asynchronous requests received by the controller from that node are accepted.
0	asynReqResource0	RSC	If bit 0 is set to 1b for local bus node number 0, asynchronous requests received by the controller from that node are accepted.

8.37 Physical Request Filter High Register

The physical request filter high set/clear register enables physical receive requests on a per-node basis, and handles the upper node IDs. When a packet is destined for the physical request context, and the node ID has been compared against the ARRQ registers, then the comparison is done again with this register. If the bit corresponding to the node ID is not set to 1b in this register, then the request is handled by the ARRQ context instead of the physical request context. The node ID comparison is done if the source node is on the same bus as the controller. Nonlocal bus-sourced packets are not acknowledged unless bit 31 in this register is set to 1b. See Table 8−29 for a complete description of the register contents.

OHCI register offset: 110h set register
114h clear register
Register type: Read/Set/Clear
Default value: 0000 0000h

BIT NUMBER	31	30	29	28	27	26	25	24	23	22	21	20	19	18	17	16
RESET STATE	0	0	0	0	0	0	0	0	0	0	0	0	0	0	0	0
BIT NUMBER	**15**	**14**	**13**	**12**	**11**	**10**	**9**	**8**	**7**	**6**	**5**	**4**	**3**	**2**	**1**	**0**
RESET STATE	0	0	0	0	0	0	0	0	0	0	0	0	0	0	0	0

Table 8−29. Physical Request Filter High Register Description

BIT	FIELD NAME	TYPE	DESCRIPTION
31	physReqAllBusses	RSC	If bit 31 is set to 1b, all asynchronous requests received by the controller from nonlocal bus nodes are accepted. Bit 31 is not cleared by a $\overline{\text{PRST}}$.
30	physReqResource62	RSC	If bit 30 is set to 1b for local bus node number 62, physical requests received by the controller from that node are handled through the physical request context.
29	physReqResource61	RSC	If bit 29 is set to 1b for local bus node number 61, physical requests received by the controller from that node are handled through the physical request context.
28	physReqResource60	RSC	If bit 28 is set to 1b for local bus node number 60, physical requests received by the controller from that node are handled through the physical request context.
27	physReqResource59	RSC	If bit 27 is set to 1b for local bus node number 59, physical requests received by the controller from that node are handled through the physical request context.
26	physReqResource58	RSC	If bit 26 is set to 1b for local bus node number 58, physical requests received by the controller from that node are handled through the physical request context.
25	physReqResource57	RSC	If bit 25 is set to 1b for local bus node number 57, physical requests received by the controller from that node are handled through the physical request context.
24	physReqResource56	RSC	If bit 24 is set to 1b for local bus node number 56, physical requests received by the controller from that node are handled through the physical request context.
23	physReqResource55	RSC	If bit 23 is set to 1b for local bus node number 55, physical requests received by the controller from that node are handled through the physical request context.
22	physReqResource54	RSC	If bit 22 is set to 1b for local bus node number 54, physical requests received by the controller from that node are handled through the physical request context.
21	physReqResource53	RSC	If bit 21 is set to 1b for local bus node number 53, physical requests received by the controller from that node are handled through the physical request context.
20	physReqResource52	RSC	If bit 20 is set to 1b for local bus node number 52, physical requests received by the controller from that node are handled through the physical request context.
19	physReqResource51	RSC	If bit 19 is set to 1b for local bus node number 51, physical requests received by the controller from that node are handled through the physical request context.
18	physReqResource50	RSC	If bit 18 is set to 1b for local bus node number 50, physical requests received by the controller from that node are handled through the physical request context.
17	physReqResource49	RSC	If bit 17 is set to 1b for local bus node number 49, physical requests received by the controller from that node are handled through the physical request context.

Table 8−29. Physical Request Filter High Register Description (Continued)

BIT	FIELD NAME	TYPE	DESCRIPTION
16	physReqResource48	RSC	If bit 16 is set to 1b for local bus node number 48, physical requests received by the controller from that node are handled through the physical request context.
15	physReqResource47	RSC	If bit 15 is set to 1b for local bus node number 47, physical requests received by the controller from that node are handled through the physical request context.
14	physReqResource46	RSC	If bit 14 is set to 1b for local bus node number 46, physical requests received by the controller from that node are handled through the physical request context.
13	physReqResource45	RSC	If bit 13 is set to 1b for local bus node number 45, physical requests received by the controller from that node are handled through the physical request context.
12	physReqResource44	RSC	If bit 12 is set to 1b for local bus node number 44, physical requests received by the controller from that node are handled through the physical request context.
11	physReqResource43	RSC	If bit 11 is set to 1b for local bus node number 43, physical requests received by the controller from that node are handled through the physical request context.
10	physReqResource42	RSC	If bit 10 is set to 1b for local bus node number 42, physical requests received by the controller from that node are handled through the physical request context.
9	physReqResource41	RSC	If bit 9 is set to 1b for local bus node number 41, physical requests received by the controller from that node are handled through the physical request context.
8	physReqResource40	RSC	If bit 8 is set to 1b for local bus node number 40, physical requests received by the controller from that node are handled through the physical request context.
7	physReqResource39	RSC	If bit 7 is set to 1b for local bus node number 39, physical requests received by the controller from that node are handled through the physical request context.
6	physReqResource38	RSC	If bit 6 is set to 1b for local bus node number 38, physical requests received by the controller from that node are handled through the physical request context.
5	physReqResource37	RSC	If bit 5 is set to 1b for local bus node number 37, physical requests received by the controller from that node are handled through the physical request context.
4	physReqResource36	RSC	If bit 4 is set to 1b for local bus node number 36, physical requests received by the controller from that node are handled through the physical request context.
3	physReqResource35	RSC	If bit 3 is set to 1b for local bus node number 35, physical requests received by the controller from that node are handled through the physical request context.
2	physReqResource34	RSC	If bit 2 is set to 1b for local bus node number 34, physical requests received by the controller from that node are handled through the physical request context.
1	physReqResource33	RSC	If bit 1 is set to 1b for local bus node number 33, physical requests received by the controller from that node are handled through the physical request context.
0	physReqResource32	RSC	If bit 0 is set to 1b for local bus node number 32, physical requests received by the controller from that node are handled through the physical request context.

8.38 Physical Request Filter Low Register

The physical request filter low set/clear register enables physical receive requests on a per-node basis, and handles the lower node IDs. When a packet is destined for the physical request context, and the node ID has been compared against the asynchronous request filter registers, then the node ID comparison is done again with this register. If the bit corresponding to the node ID is not set to 1b in this register, then the request is handled by the asynchronous request context instead of the physical request context. See Table 8−30 for a complete description of the register contents.

OHCI register offset: 118h set register
11Ch clear register
Register type: Read/Set/Clear
Default value: 0000 0000h

BIT NUMBER	31	30	29	28	27	26	25	24	23	22	21	20	19	18	17	16
RESET STATE	0	0	0	0	0	0	0	0	0	0	0	0	0	0	0	0
BIT NUMBER	**15**	**14**	**13**	**12**	**11**	**10**	**9**	**8**	**7**	**6**	**5**	**4**	**3**	**2**	**1**	**0**
RESET STATE	0	0	0	0	0	0	0	0	0	0	0	0	0	0	0	0

Table 8−30. Physical Request Filter Low Register Description

BIT	FIELD NAME	TYPE	DESCRIPTION
31	physReqResource31	RSC	If bit 31 is set to 1b for local bus node number 31, physical requests received by the controller from that node are handled through the physical request context.
30	physReqResource30	RSC	If bit 30 is set to 1b for local bus node number 30, physical requests received by the controller from that node are handled through the physical request context.
29−2	physReqResourcen	RSC	Bits 29 through 2 (physReqResourcen, where n = 29, 28, 27, …, 2) follow the same pattern as bits 31 and 30.
1	physReqResource1	RSC	If bit 1 is set to 1b for local bus node number 1, physical requests received by the controller from that node are handled through the physical request context.
0	physReqResource0	RSC	If bit 0 is set to 1b for local bus node number 0, physical requests received by the controller from that node are handled through the physical request context.

8.39 Physical Upper Bound Register (Optional Register)

The physical upper bound register is an optional register and is not implemented. This register returns 0000 0000h when read.

OHCI register offset: 120h
Register type: Read-only
Default value: 0000 0000h

BIT NUMBER	31	30	29	28	27	26	25	24	23	22	21	20	19	18	17	16
RESET STATE	0	0	0	0	0	0	0	0	0	0	0	0	0	0	0	0
BIT NUMBER	**15**	**14**	**13**	**12**	**11**	**10**	**9**	**8**	**7**	**6**	**5**	**4**	**3**	**2**	**1**	**0**
RESET STATE	0	0	0	0	0	0	0	0	0	0	0	0	0	0	0	0

8.40 Asynchronous Context Control Register

The asynchronous context control set/clear register controls the state and indicates status of the DMA context. See Table 8−31 for a complete description of the register contents.

OHCI register offset:	180h	set register	[ATRQ]
	184h	clear register	[ATRQ]
	1A0h	set register	[ATRS]
	1A4h	clear register	[ATRS]
	1C0h	set register	[ARRQ]
	1C4h	clear register	[ARRQ]
	1E0h	set register	[ARRS]
	1E4h	clear register	[ARRS]
Register type:	Read/Set/Clear/Update, Read/Set/Update, Read/Update, Read-only		
Default value:	0000 X0XXh		

BIT NUMBER	31	30	29	28	27	26	25	24	23	22	21	20	19	18	17	16
RESET STATE	0	0	0	0	0	0	0	0	0	0	0	0	0	0	0	0
BIT NUMBER	**15**	**14**	**13**	**12**	**11**	**10**	**9**	**8**	**7**	**6**	**5**	**4**	**3**	**2**	**1**	**0**
RESET STATE	0	0	0	X	0	0	0	0	X	X	X	X	X	X	X	X

Table 8−31. Asynchronous Context Control Register Description

BIT	FIELD NAME	TYPE	DESCRIPTION
31−16	RSVD	R	Reserved. Bits 31−16 return 0000h when read.
15	run	RSCU	Bit 15 is set to 1b by software to enable descriptor processing for the context and cleared by software to stop descriptor processing. The controller changes this bit only on a system (hardware) or software reset.
14−13	RSVD	R	Reserved. Bits 14 and 13 return 00b when read.
12	wake	RSU	Software sets bit 12 to 1b to cause the controller to continue or resume descriptor processing. The controller clears this bit on every descriptor fetch.
11	dead	RU	The controller sets bit 11 to 1b when it encounters a fatal error, and clears the bit when software clears bit 15 (run). Asynchronous contexts supporting out-of-order pipelining provide unique ContextControl.dead functionality. See Section 7.7 in the *1394 Open Host Controller Interface Specification* (Release 1.1) for more information.
10	active	RU	The controller sets bit 10 to 1b when it is processing descriptors.
9−8	RSVD	R	Reserved. Bits 9 and 8 return 00b when read.
7−5	spd	RU	This field indicates the speed at which a packet was received or transmitted and only contains meaningful information for receive contexts. This field is encoded as: 000 = 100M bits/sec 001 = 200M bits/sec 010 = 400M bits/sec All other values are reserved.
4−0	eventcode	RU	This field holds the acknowledge sent by the link core for this packet or an internally generated error code if the packet was not transferred successfully.

8.41 Asynchronous Context Command Pointer Register

The asynchronous context command pointer register contains a pointer to the address of the first descriptor block that the controller accesses when software enables the context by setting bit 15 (run) in the asynchronous context control register (see Section 8.40) to 1b. See Table 8−32 for a complete description of the register contents.

OHCI register offset: 18Ch [ATRQ]
1ACh [ATRS]
1CCh [ARRQ]
1ECh [ARRS]
Register type: Read/Write/Update
Default value: XXXX XXXXh

BIT NUMBER	31	30	29	28	27	26	25	24	23	22	21	20	19	18	17	16
RESET STATE	X	X	X	X	X	X	X	X	X	X	X	X	X	X	X	X
BIT NUMBER	**15**	**14**	**13**	**12**	**11**	**10**	**9**	**8**	**7**	**6**	**5**	**4**	**3**	**2**	**1**	**0**
RESET STATE	X	X	X	X	X	X	X	X	X	X	X	X	X	X	X	X

Table 8−32. Asynchronous Context Command Pointer Register Description

BIT	FIELD NAME	TYPE	DESCRIPTION
31−4	descriptorAddress	RWU	Contains the upper 28 bits of the address of a 16-byte aligned descriptor block.
3−0	Z	RWU	Indicates the number of contiguous descriptors at the address pointed to by the descriptor address. If Z is 0h, then it indicates that the descriptorAddress field (bits 31−4) is not valid.

8.42 Isochronous Transmit Context Control Register

The isochronous transmit context control set/clear register controls options, state, and status for the isochronous transmit DMA contexts. The n value in the following register addresses indicates the context number (n = 0, 1, 2, 3, …, 7). See Table 8−33 for a complete description of the register contents.

OHCI register offset:	200h + (16 * n)	set register
	204h + (16 * n)	clear register
Register type:	Read/Set/Clear/Update, Read/Set/Clear, Read/Set/Update, Read/Update, Read-only	
Default value:	XXXX X0XXh	

BIT NUMBER	31	30	29	28	27	26	25	24	23	22	21	20	19	18	17	16
RESET STATE	X	X	X	X	X	X	X	X	X	X	X	X	X	X	X	X
BIT NUMBER	**15**	**14**	**13**	**12**	**11**	**10**	**9**	**8**	**7**	**6**	**5**	**4**	**3**	**2**	**1**	**0**
RESET STATE	0	0	0	X	0	0	0	0	X	X	X	X	X	X	X	X

Table 8−33. Isochronous Transmit Context Control Register Description

BIT	FIELD NAME	TYPE	DESCRIPTION
31	cycleMatchEnable	RSCU	When bit 31 is set to 1b, processing occurs such that the packet described by the context first descriptor block is transmitted in the cycle whose number is specified in the cycleMatch field (bits 30−16). The cycleMatch field (bits 30−16) must match the low-order two bits of cycleSeconds and the 13-bit cycleCount field in the cycle start packet that is sent or received immediately before isochronous transmission begins. Since the isochronous transmit DMA controller may work ahead, the processing of the first descriptor block may begin slightly in advance of the actual cycle in which the first packet is transmitted. The effects of this bit, however, are impacted by the values of other bits in this register and are explained in the *1394 Open Host Controller Interface Specification.* Once the context has become active, hardware clears this bit.
30−16	cycleMatch	RSC	This field contains a 15-bit value, corresponding to the low-order two bits of the isochronous cycle timer register at OHCI offset F0h (see Section 8.34) cycleSeconds field (bits 31−25) and the cycleCount field (bits 24−12). If bit 31 (cycleMatchEnable) is set to 1b, then this isochronous transmit DMA context becomes enabled for transmits when the low-order two bits of the isochronous cycle timer register at OHCI offset F0h cycleSeconds field (bits 31−25) and the cycleCount field (bits 24−12) value equal this field (cycleMatch) value.
15	run	RSC	Bit 15 is set to 1b by software to enable descriptor processing for the context and cleared by software to stop descriptor processing. The controller changes this bit only on a system (hardware) or software reset.
14−13	RSVD	R	Reserved. Bits 14 and 13 return 00b when read.
12	wake	RSU	Software sets bit 12 to 1b to cause the controller to continue or resume descriptor processing. The controller clears this bit on every descriptor fetch.
11	dead	RU	The controller sets bit 11 to 1b when it encounters a fatal error, and clears the bit when software clears bit 15 (run) to 0b.
10	active	RU	The controller sets bit 10 to 1b when it is processing descriptors.
9−8	RSVD	R	Reserved. Bits 9 and 8 return 00b when read.
7−5	spd	RU	This field in not meaningful for isochronous transmit contexts.
4−0	event code	RU	Following an OUTPUT_LAST* command, the error code is indicated in this field. Possible values are: ack_complete, evt_descriptor_read, evt_data_read, and evt_unknown.

† On an overflow for each running context, the isochronous transmit DMA supports up to 7 cycle skips, when the following are true:

1. Bit 11 (dead) in either the isochronous transmit or receive context control register is set to 1b.
2. Bits 4−0 (eventcode field) in either the isochronous transmit or receive context control register is set to evt_timeout.
3. Bit 24 (unrecoverableError) in the interrupt event register at OHCI offset 80h/84h (see Section 8.21) is set to 1b.

8.43 Isochronous Transmit Context Command Pointer Register

The isochronous transmit context command pointer register contains a pointer to the address of the first descriptor block that the controller accesses when software enables an isochronous transmit context by setting bit 15 (run) in the isochronous transmit context control register (see Section 8.42) to 1b. The isochronous transmit DMA context command pointer can be read when a context is active. The n value in the following register addresses indicates the context number (n = 0, 1, 2, 3, …, 7).

OHCI register offset: 20Ch + (16 * n)
Register type: Read-only
Default value: XXXX XXXXh

BIT NUMBER	31	30	29	28	27	26	25	24	23	22	21	20	19	18	17	16
RESET STATE	X	X	X	X	X	X	X	X	X	X	X	X	X	X	X	X
BIT NUMBER	**15**	**14**	**13**	**12**	**11**	**10**	**9**	**8**	**7**	**6**	**5**	**4**	**3**	**2**	**1**	**0**
RESET STATE	X	X	X	X	X	X	X	X	X	X	X	X	X	X	X	X

8.44 Isochronous Receive Context Control Register

The isochronous receive context control set/clear register controls options, state, and status for the isochronous receive DMA contexts. The n value in the following register addresses indicates the context number (n = 0, 1, 2, 3). See Table 8−34 for a complete description of the register contents.

OHCI register offset: 400h + (32 * n) set register
404h + (32 * n) clear register
Register type: Read/Set/Clear/Update, Read/Set/Clear, Read/Set/Update, Read/Update, Read-only
Default value: XX00 X0XXh

BIT NUMBER	31	30	29	28	27	26	25	24	23	22	21	20	19	18	17	16
RESET STATE	X	X	X	X	X	0	0	0	0	0	0	0	0	0	0	0
BIT NUMBER	**15**	**14**	**13**	**12**	**11**	**10**	**9**	**8**	**7**	**6**	**5**	**4**	**3**	**2**	**1**	**0**
RESET STATE	0	0	0	X	0	0	0	0	X	X	X	X	X	X	X	X

Table 8−34. Isochronous Receive Context Control Register Description

BIT	FIELD NAME	TYPE	DESCRIPTION
31	bufferFill	RSC	When bit 31 is set to 1b, received packets are placed back-to-back to completely fill each receive buffer. When this bit is cleared, each received packet is placed in a single buffer. If bit 28 (multiChanMode) is set to 1b, then this bit must also be set to 1b. The value of this bit must not be changed while bit 10 (active) or bit 15 (run) is set to 1b.
30	isochHeader	RSC	When bit 30 is set to 1b, received isochronous packets include the complete 4-byte isochronous packet header seen by the link layer. The end of the packet is marked with a xferStatus in the first doublet, and a 16-bit timeStamp indicating the time of the most recently received (or sent) cycleStart packet. When this bit is cleared, the packet header is stripped from received isochronous packets. The packet header, if received, immediately precedes the packet payload. The value of this bit must not be changed while bit 10 (active) or bit 15 (run) is set to 1b.
29	cycleMatchEnable	RSCU	When bit 29 is set to 1b and the 13-bit cycleMatch field (bits 24−12) in the isochronous receive context match register (See Section 8.46) matches the 13-bit cycleCount field in the cycleStart packet, the context begins running. The effects of this bit, however, are impacted by the values of other bits in this register. Once the context has become active, hardware clears this bit. The value of this bit must not be changed while bit 10 (active) or bit 15 (run) is set to 1b.

Table 8−34. Isochronous Receive Context Control Register Description (Continued)

BIT	FIELD NAME	TYPE	DESCRIPTION
28	multiChanMode	RSC	When bit 28 is set to 1b, the corresponding isochronous receive DMA context receives packets for all isochronous channels enabled in the isochronous receive channel mask high register at OHCI offset 70h/74h (see Section 8.19) and isochronous receive channel mask low register at OHCI offset 78h/7Ch (see Section 8.20). The isochronous channel number specified in the isochronous receive context match register (see Section 8.46) is ignored. When this bit is cleared, the isochronous receive DMA context receives packets for the single channel specified in the isochronous receive context match register (see Section 8.46). Only one isochronous receive DMA context may use the isochronous receive channel mask registers (see Sections 8.19, and 8.20). If more than one isochronous receive context control register has this bit set, then the results are undefined. The value of this bit must not be changed while bit 10 (active) or bit 15 (run) is set to 1b.
27	dualBufferMode	RSC	When bit 27 is set to 1b, receive packets are separated into first and second payload and streamed independently to the firstBuffer series and secondBuffer series as described in Section 10.2.3 in the *1394 Open Host Controller Interface Specification*. Also, when bit 27 is set to 1b, both bits 28 (multiChanMode) and 31 (bufferFill) are cleared to 00b. The value of this bit does not change when either bit 10 (active) or bit 15 (run) is set to 1b.
26−16	RSVD	R	Reserved. Bits 26−16 return 0s when read.
15	run	RSCU	Bit 15 is set to 1b by software to enable descriptor processing for the context and cleared by software to stop descriptor processing. The controller changes this bit only on a system (hardware) or software reset.
14−13	RSVD	R	Reserved. Bits 14 and 13 return 00b when read.
12	wake	RSU	Software sets bit 12 to 1b to cause the controller to continue or resume descriptor processing. The controller clears this bit on every descriptor fetch.
11	dead	RU	The controller sets bit 11 to 1b when it encounters a fatal error, and clears the bit when software clears bit 15 (run).
10	active	RU	The controller sets bit 10 to 1b when it is processing descriptors.
9−8	RSVD	R	Reserved. Bits 9 and 8 return 00b when read.
7−5	spd	RU	This field indicates the speed at which the packet was received. 000 = 100M bits/sec 001 = 200M bits/sec 010 = 400M bits/sec All other values are reserved.
4−0	event code	RU	For bufferFill mode, possible values are: ack_complete, evt_descriptor_read, evt_data_write, and evt_unknown. Packets with data errors (either dataLength mismatches or dataCRC errors) and packets for which a FIFO overrun occurred are backed out. For packet-per-buffer mode, possible values are: ack_complete, ack_data_error, evt_long_packet, evt_overrun, evt_descriptor_read, evt_data_write, and evt_unknown.

8.45 Isochronous Receive Context Command Pointer Register

The isochronous receive context command pointer register contains a pointer to the address of the first descriptor block that the controller accesses when software enables an isochronous receive context by setting bit 15 (run) in the isochronous receive context control register (see Section 8.44) to 1b. The n value in the following register addresses indicates the context number (n = 0, 1, 2, 3).

OHCI register offset: 40Ch + (32 * n)
Register type: Read-only
Default value: XXXX XXXXh

BIT NUMBER	31	30	29	28	27	26	25	24	23	22	21	20	19	18	17	16
RESET STATE	X	X	X	X	X	X	X	X	X	X	X	X	X	X	X	X
BIT NUMBER	**15**	**14**	**13**	**12**	**11**	**10**	**9**	**8**	**7**	**6**	**5**	**4**	**3**	**2**	**1**	**0**
RESET STATE	X	X	X	X	X	X	X	X	X	X	X	X	X	X	X	X

8.46 Isochronous Receive Context Match Register

The isochronous receive context match register starts an isochronous receive context running on a specified cycle number, filters incoming isochronous packets based on tag values, and waits for packets with a specified sync value. The n value in the following register addresses indicates the context number (n = 0, 1, 2, 3). See Table 8−35 for a complete description of the register contents.

OHCI register offset: 410Ch + (32 * n)
Register type: Read/Write, Read-only
Default value: XXXX XXXXh

BIT NUMBER	31	30	29	28	27	26	25	24	23	22	21	20	19	18	17	16
RESET STATE	X	X	X	X	0	0	0	X	X	X	X	X	X	X	X	X
BIT NUMBER	**15**	**14**	**13**	**12**	**11**	**10**	**9**	**8**	**7**	**6**	**5**	**4**	**3**	**2**	**1**	**0**
RESET STATE	X	X	X	X	X	X	X	X	0	X	X	X	X	X	X	X

Table 8−35. Isochronous Receive Context Match Register Description

BIT	FIELD NAME	TYPE	DESCRIPTION
31	tag3	RW	If bit 31 is set to 1b, this context matches on isochronous receive packets with a tag field of 11b.
30	tag2	RW	If bit 30 is set to 1b, this context matches on isochronous receive packets with a tag field of 10b.
29	tag1	RW	If bit 29 is set to 1b, this context matches on isochronous receive packets with a tag field of 01b.
28	tag0	RW	If bit 28 is set to 1b, this context matches on isochronous receive packets with a tag field of 00b.
27	RSVD	R	Reserved. Bit 27 returns 0b when read.
26−12	cycleMatch	RW	This field contains a 15-bit value corresponding to the two low-order bits of cycleSeconds and the 13-bit cycleCount field in the cycleStart packet. If cycleMatchEnable (bit 29) in the isochronous receive context control register (see Section 8.44) is set to 1b, then this context is enabled for receives when the two low-order bits of the isochronous cycle timer register at OHCI offset F0h (see Section 8.34) cycleSeconds field (bits 31−25) and cycleCount field (bits 24−12) value equal this field (cycleMatch) value.
11−8	sync	RW	This 4-bit field is compared to the sync field of each isochronous packet for this channel when the command descriptor w field is set to 11b.
7	RSVD	R	Reserved. Bit 7 returns 0b when read.
6	tag1SyncFilter	RW	If bit 6 and bit 29 (tag1) are set to 1b, then packets with tag 01b are accepted into the context if the two most significant bits of the packet sync field are 00b. Packets with tag values other than 01b are filtered according to bit 28 (tag0), bit 30 (tag2), and bit 31 (tag3) without any additional restrictions. If this bit is cleared, then this context matches on isochronous receive packets as specified in bits 28−31 (tag0−tag3) with no additional restrictions.
5−0	channelNumber	RW	This 6-bit field indicates the isochronous channel number for which this isochronous receive DMA context accepts packets.

9 TI Extension Registers

The TI extension base address register provides a method of accessing memory-mapped TI extension registers. See Section 7.9, *TI Extension Base Address Register*, for register bit field details. See Table 9−1 for the TI extension register listing.

Table 9−1. TI Extension Register Map

REGISTER NAME	OFFSET
Reserved	00h−A7Fh
Isochronous Receive DV Enhancement Set	A80h
Isochronous Receive DV Enhancement Clear	A84h
Link Enhancement Control Set	A88h
Link Enhancement Control Clear	A8Ch
Isochronous Transmit Context 0 Timestamp Offset	A90h
Isochronous Transmit Context 1 Timestamp Offset	A94h
Isochronous Transmit Context 2 Timestamp Offset	A98h
Isochronous Transmit Context 3 Timestamp Offset	A9Ch
Isochronous Transmit Context 4 Timestamp Offset	AA0h
Isochronous Transmit Context 5 Timestamp Offset	AA4h
Isochronous Transmit Context 6 Timestamp Offset	AA8h
Isochronous Transmit Context 7 Timestamp Offset	AACh

9.1 DV and MPEG2 Timestamp Enhancements

The DV timestamp enhancements are enabled by bit 8 (enab_dv_ts) in the link enhancement control register located at PCI offset F4h and are aliased in TI extension register space at offset A88h (set) and A8Ch (clear).

The DV and MPEG transmit enhancements are enabled separately by bits in the link enhancement control register located in PCI configuration space at PCI offset F4h. The link enhancement control register is also aliased as a set/clear register in TI extension space at offset A88h (set) and A8Ch (clear).

Bit 8 (enab_dv_ts) of the link enhancement control register enables DV timestamp support. When enabled, the link calculates a timestamp based on the cycle timer and the timestamp offset register and substitutes it in the SYT field of the CIP once per DV frame.

Bit 10 (enab_mpeg_ts) of the link enhancement control register enables MPEG timestamp support. Two MPEG time stamp modes are supported. The default mode calculates an initial delta that is added to the calculated timestamp in addition to a user-defined offset. The initial offset is calculated as the difference in the intended transmit cycle count and the cycle count field of the timestamp in the first TSP of the MPEG2 stream. The use of the initial delta can be controlled by bit 31 (DisableInitialOffset) in the timestamp offset register (see Section 9.5).

The MPEG2 timestamp enhancements are enabled by bit 10 (enab_mpeg_ts) in the link enhancement control register located at PCI offset F4h and aliased in TI extension register space at offset A88h (set) and A8Ch (clear).

When bit 10 (enab_mpeg_ts) is set to 1b, the hardware applies the timestamp enhancements to isochronous transmit packets that have the tag field equal to 01b in the isochronous packet header and a FMT field equal to 10h.

9.2 Isochronous Receive Digital Video Enhancements

The DV frame sync and branch enhancement provides a mechanism in buffer-fill mode to synchronize 1394 DV data that is received in the correct order to DV frame-sized data buffers described by several INPUT_MORE descriptors (see *1394 Open Host Controller Interface Specification*, Release 1.1). This is accomplished by waiting for the start-of-frame packet in a DV stream before transferring the received isochronous stream into the memory buffer described by the INPUT_MORE descriptors. This can improve the DV capture application performance by reducing the amount of processing overhead required to strip the CIP header and copy the received packets into frame-sized buffers.

The start of a DV frame is represented in the 1394 packet as a 16-bit pattern of 1FX7h (first byte 1Fh and second byte X7h) received as the first two bytes of the third quadlet in a DV isochronous packet.

9.3 Isochronous Receive Digital Video Enhancements Register

The isochronous receive digital video enhancements register enables the DV enhancements in the PCIxx12 controller. The bits in this register may only be modified when both the active (bit 10) and run (bit 15) bits of the corresponding context control register are 00b. See Table 9−2 for a complete description of the register contents.

TI extension register offset: A80h set register
A84h clear register
Register type: Read/Set/Clear, Read-only
Default value: 0000 0000h

BIT NUMBER	31	30	29	28	27	26	25	24	23	22	21	20	19	18	17	16
RESET STATE	0	0	0	0	0	0	0	0	0	0	0	0	0	0	0	0
BIT NUMBER	**15**	**14**	**13**	**12**	**11**	**10**	**9**	**8**	**7**	**6**	**5**	**4**	**3**	**2**	**1**	**0**
RESET STATE	0	0	0	0	0	0	0	0	0	0	0	0	0	0	0	0

Table 9−2. Isochronous Receive Digital Video Enhancements Register Description

BIT	FIELD NAME	TYPE	DESCRIPTION
31−14	RSVD	R	Reserved. Bits 31−14 return 0s when read.
13	DV_Branch3	RSC	When bit 13 is set to 1b, the isochronous receive context 3 synchronizes reception to the DV frame start tag in bufferfill mode if input_more.b = 01b, and jumps to the descriptor pointed to by frameBranch if a DV frame start tag is received out of place. This bit is only interpreted when bit 12 (CIP_Strip3) is set to 1b and bit 30 (isochHeader) in the isochronous receive context control register at OHCI offset 460h/464h (see Section 8.44) is cleared to 0b.
12	CIP_Strip3	RSC	When bit 12 is set to 1b, the isochronous receive context 3 strips the first two quadlets of payload. This bit is only interpreted when bit 30 (isochHeader) in the isochronous receive context control register at OHCI offset 460h/464h (see Section 8.44) is cleared to 0b.
11−10	RSVD	R	Reserved. Bits 11 and 10 return 00b when read.
9	DV_Branch2	RSC	When bit 9 is set to 1b, the isochronous receive context 2 synchronizes reception to the DV frame start tag in bufferfill mode if input_more.b = 01b, and jumps to the descriptor pointed to by frameBranch if a DV frame start tag is received out of place. This bit is only interpreted when bit 8 (CIP_Strip2) is set to 1b and bit 30 (isochHeader) in the isochronous receive context control register at OHCI offset 440h/444h (see Section 8.44) is cleared to 0b.
8	CIP_Strip2	RSC	When bit 8 is set to 1b, the isochronous receive context 2 strips the first two quadlets of payload. This bit is only interpreted when bit 30 (isochHeader) in the isochronous receive context control register at OHCI offset 440h/444h (see Section 8.44) is cleared to 0b.
7−6	RSVD	R	Reserved. Bits 7 and 6 return 00b when read.
5	DV_Branch1	RSC	When bit 5 is set to 1b, the isochronous receive context 1 synchronizes reception to the DV frame start tag in bufferfill mode if input_more.b = 01b, and jumps to the descriptor pointed to by frameBranch if a DV frame start tag is received out of place. This bit is only interpreted when bit 4 (CIP_Strip1) is set to 1b and bit 30 (isochHeader) in the isochronous receive context control register at OHCI offset 420h/424h (see Section 8.44) is cleared to 0b.

Table 9−2. Isochronous Receive Digital Video Enhancements Register Description (Continued)

BIT	FIELD NAME	TYPE	DESCRIPTION
4	CIP_Strip1	RSC	When bit 4 is set to 1b, the isochronous receive context 1 strips the first two quadlets of payload. This bit is only interpreted when bit 30 (isochHeader) in the isochronous receive context control register at OHCI offset 420h/424h (see Section 8.44) is cleared to 0b.
3−2	RSVD	R	Reserved. Bits 3 and 2 return 00b when read.
1	DV_Branch0	RSC	When bit 1 is set to 1b, the isochronous receive context 0 synchronizes reception to the DV frame start tag in bufferfill mode if input_more.b = 01b and jumps to the descriptor pointed to by frameBranch if a DV frame start tag is received out of place. This bit is only interpreted when bit 0 (CIP_Strip0) is set to 1b and bit 30 (isochHeader) in the isochronous receive context control register at OHCI offset 400h/404h (see Section 8.44) is cleared to 0b.
0	CIP_Strip0	RSC	When bit 0 is set to 1b, the isochronous receive context 0 strips the first two quadlets of payload. This bit is only interpreted when bit 30 (isochHeader) in the isochronous receive context control register at OHCI offset 400h/404h (see Section 8.44) is cleared to 0b.

9.4 Link Enhancement Register

This register is a memory-mapped set/clear register that is an alias of the link enhancement control register at PCI offset F4h. These bits may be initialized by software. Some of the bits may also be initialized by a serial EEPROM, if one is present, as noted in the bit descriptions below. If the bits are to be initialized by software, then the bits must be initialized prior to setting bit 19 (LPS) in the host controller control register at OHCI offset 50h/54h (see Section 8.16). See Table 9−3 for a complete description of the register contents.

TI extension register offset: A88h set register
A8Ch clear register
Register type: Read/Set/Clear, Read-only
Default value: 0000 0000h

BIT NUMBER	31	30	29	28	27	26	25	24	23	22	21	20	19	18	17	16
RESET STATE	0	0	0	0	0	0	0	0	0	0	0	0	0	0	0	0
BIT NUMBER	**15**	**14**	**13**	**12**	**11**	**10**	**9**	**8**	**7**	**6**	**5**	**4**	**3**	**2**	**1**	**0**
RESET STATE	0	0	0	1	0	0	0	0	0	0	0	0	0	0	0	0

Table 9−3. Link Enhancement Register Description

BIT	FIELD NAME	TYPE	DESCRIPTION
31−16	RSVD	R	Reserved. Bits 31−16 return 0000h when read.
15 ‡	dis_at_pipeline	RW	Disable AT pipelining. When bit 15 is set to 1b, out-of-order AT pipelining is disabled. The default value for this bit is 0b.
14 ‡	RSVD	R	Reserved. Bit 14 defaults to 0b and must remain 0b for normal operation of the OHCI core.
13−12 ‡	atx_thresh	RW	This field sets the initial AT threshold value, which is used until the AT FIFO is underrun. When the controller retries the packet, it uses a 2K-byte threshold, resulting in a store-and-forward operation. 00 = Threshold ~ 2K bytes resulting in a store-and-forward operation 01 = Threshold ~ 1.7K bytes (default) 10 = Threshold ~ 1K bytes 11 = Threshold ~ 512 bytes These bits fine-tune the asynchronous transmit threshold. For most applications the 1.7K-byte threshold is optimal. Changing this value may increase or decrease the 1394 latency depending on the average PCI bus latency. Setting the AT threshold to 1.7K, 1K, or 512 bytes results in data being transmitted at these thresholds or when an entire packet has been checked into the FIFO. If the packet to be transmitted is larger than the AT threshold, then the remaining data must be received before the AT FIFO is emptied; otherwise, an underrun condition occurs, resulting in a packet error at the receiving node. As a result, the link then commences a store-and-forward operation. It waits until it has the complete packet in the FIFO before retransmitting it on the second attempt to ensure delivery. An AT threshold of 2K results in a store-and-forward operation, which means that asynchronous data is not transmitted until an end-of-packet token is received. Restated, setting the AT threshold to 2K results in only complete packets being transmitted. Note that this controller always uses a store-and-forward operation when the asynchronous transmit retries register at OHCI offset 08h (see Section 8.3) is cleared.
11	RSVD	R	Reserved. Bit 11 returns 0b when read.
10 ‡	enab_mpeg_ts	RW	Enable MPEG CIP timestamp enhancement. When bit 9 is set to 1b, the enhancement is enabled for MPEG CIP transmit streams (FMT = 20h). The default value for this bit is 0b.
9	RSVD	R	Reserved. Bit 9 returns 0b when read.
8 ‡	enab_dv_ts	RW	Enable DV CIP timestamp enhancement. When bit 8 is set to 1b, the enhancement is enabled for DV CIP transmit streams (FMT = 00h). The default value for this bit is 0b.
7 ‡	enab_unfair	RW	Enable asynchronous priority requests. OHCI-Lynx™ compatible. Setting bit 7 to 1b enables the link to respond to requests with priority arbitration. It is recommended that this bit be set to 1b. The default value for this bit is 0b.

‡ This bit is cleared only by the assertion of $\overline{\text{GRST}}$.

Table 9−3. Link Enhancement Register Description (Continued)

BIT	FIELD NAME	TYPE	DESCRIPTION
6	RSVD	R	This bit is not assigned in the PCIxx12 follow-on products, because this bit location loaded by the serial EEPROM from the enhancements field corresponds to bit 23 (programPhyEnable) in the host controller control register at OHCI offset 50h/54h (see Section 8.16).
5−3	RSVD	R	Reserved. Bits 5−3 return 000b when read.
2 ‡	RSVD	R	Reserved. Bit 2 returns 0b when read.
1 ‡	enab_accel	RW	Enable acceleration enhancements. OHCI-Lynx™ compatible. When bit 1 is set to 1b, the PHY layer is notified that the link supports the IEEE Std 1394a-2000 acceleration enhancements, that is, ack-accelerated, fly-by concatenation, etc. It is recommended that this bit be set to 1b. The default value for this bit is 0b.
0	RSVD	R	Reserved. Bit 0 returns 0b when read.

‡ This bit is cleared only by the assertion of $\overline{\text{GRST}}$.

9.5 Timestamp Offset Register

The value of this register is added as an offset to the cycle timer value when using the MPEG, DV, and CIP enhancements. A timestamp offset register is implemented per isochronous transmit context. The n value following the offset indicates the context number (n = 0, 1, 2, 3, …, 7). These registers are programmed by software as appropriate. See Table 9−4 for a complete description of the register contents.

TI extension register offset: A90h + (4*n)
Register type: Read/Write, Read-only
Default value: 0000 0000h

BIT NUMBER	31	30	29	28	27	26	25	24	23	22	21	20	19	18	17	16
RESET STATE	0	0	0	0	0	0	0	0	0	0	0	0	0	0	0	0
BIT NUMBER	**15**	**14**	**13**	**12**	**11**	**10**	**9**	**8**	**7**	**6**	**5**	**4**	**3**	**2**	**1**	**0**
RESET STATE	0	0	0	0	0	0	0	0	0	0	0	0	0	0	0	0

Table 9−4. Timestamp Offset Register Description

BIT	FIELD NAME	TYPE	DESCRIPTION
31	DisableInitialOffset	RW	Bit 31 disables the use of the initial timestamp offset when the MPEG2 enhancements are enabled. A value of 0b indicates the use of the initial offset, a value of 1b indicates that the initial offset must not be applied to the calculated timestamp. This bit has no meaning for the DV timestamp enhancements. The default value for this bit is 0b.
30−25	RSVD	R	Reserved. Bits 30−25 return 000000b when read.
24−12	CycleCount	RW	This field adds an offset to the cycle count field in the timestamp when the DV or MPEG2 enhancements are enabled. The cycle count field is incremented modulo 8000; therefore, values in this field must be limited between 0 and 7999. The default value for this field is all 0b..
11−0	CycleOffset	RW	This field adds an offset to the cycle offset field in the timestamp when the DV or MPEG2 enhancements are enabled. The cycle offset field is incremented modulo 3072; therefore, values in this field must be limited between 0 and 3071. The default value for this field is 000h.

10 PHY Register Configuration

There are 16 accessible internal registers in the PCIxx12 controller. The configuration of the registers at addresses 0h through 7h (the base registers) is fixed, whereas the configuration of the registers at addresses 8h through Fh (the paged registers) is dependent upon which one of eight pages, numbered 0h through 7h, is currently selected. The selected page is set in base register 7h.

10.1 Base Registers

Table 10−1 shows the configuration of the base registers, and Table 10−2 shows the corresponding field descriptions. The base register field definitions are unaffected by the selected page number.

A reserved register or register field (marked as Reserved in the following register configuration tables) is read as 0, but is subject to future usage. All registers in address pages 2 through 6 are reserved.

Table 10−1. Base Register Configuration

ADDRESS	BIT POSITION							
	0	1	2	3	4	5	6	7
0000	Physical ID						R	CPS
0001	RHB	IBR	Gap_Count					
0010	Extended (111b)			Reserved	Total_Ports (0010b)			
0011	Max_Speed (010b)			Reserved	Delay (0000b)			
0100	LCtrl	C	Jitter (000b)			Pwr_Class		
0101	Watchdog	ISBR	Loop	Pwr_fail	Timeout	Port_event	Enab_accel	Enab_multi
0110	Reserved							
0111	Page_Select			Reserved	Port_Select			

Table 10−2. Base Register Field Descriptions

FIELD	SIZE	TYPE	DESCRIPTION
Physical ID	6	R	This field contains the physical address ID of this node determined during self-ID. The physical ID is invalid after a bus reset until self-ID has completed as indicated by an unsolicited register-0 status transfer.
R	1	R	Root. This bit indicates that this node is the root node. The R bit is cleared to 0b by bus reset and is set to 1b during tree-ID if this node becomes root.
CPS	1	R	Cable-power-status. This bit indicates the state of the CPS input terminal. The CPS terminal is normally tied to serial bus cable power through a 400-kΩ resistor. A 0b in this bit indicates that the cable power voltage has dropped below its threshold for ensured reliable operation.
RHB	1	R/W	Root-holdoff bit. This bit instructs the PHY layer to attempt to become root after the next bus reset. The RHB bit is cleared to 0b by a system (hardware) reset and is unaffected by a bus reset.
IBR	1	R/W	Initiate bus reset. This bit instructs the PHY layer to initiate a long (166 µs) bus reset at the next opportunity. Any receive or transmit operation in progress when this bit is set completes before the bus reset is initiated. The IBR bit is cleared to 0b after a system (hardware) reset or a bus reset.
Gap_Count	6	R/W	Arbitration gap count. This value sets the subaction (fair) gap, arb-reset gap, and arb-delay times. The gap count can be set either by a write to the register, or by reception or transmission of a PHY_CONFIG packet. The gap count is reset to 3Fh by system (hardware) reset or after two consecutive bus resets without an intervening write to the gap count register (either by a write to the PHY register or by a PHY_CONFIG packet).
Extended	3	R	Extended register definition. For the controller, this field is 111b, indicating that the extended register set is implemented.
Total_Ports	4	R	Number of ports. This field indicates the number of ports implemented in the PHY layer. For the controller this field is 2.
Max_Speed	3	R	PHY speed capability. For the PCIxx12 PHY layer this field is 010b, indicating S400 speed capability.
Delay	4	R	PHY repeater data delay. This field indicates the worst case repeater data delay of the PHY layer, expressed as 144+(delay × 20) ns. For the controller this field is 0h.
LCtrl	1	R/W	Link-active status control. This bit controls the active status of the LLC as indicated during self-ID. The logical AND of this bit and the LPS active status is replicated in the L field (bit 9) of the self-ID packet. The LLC is considered active only if both the LPS input is active and the LCtrl bit is set. The LCtrl bit provides a software controllable means to indicate the LLC active/status in lieu of using the LPS input. The LCtrl bit is set to 1b by a system (hardware) reset and is unaffected by a bus reset. NOTE: The state of the PHY-LLC interface is controlled solely by the LPS input, regardless of the state of the LCtrl bit. If the PHY-LLC interface is operational as determined by the LPS input being active, received packets and status information continue to be presented on the interface, and any requests indicated on the LREQ input are processed, even if the LCtrl bit is cleared to 0b.
C	1	R/W	Contender status. This bit indicates that this node is a contender for the bus or isochronous resource manager. This bit is replicated in the c field (bit 20) of the self-ID packet.
Jitter	3	R	PHY repeater jitter. This field indicates the worst case difference between the fastest and slowest repeater data delay, expressed as (Jitter+1) × 20 ns. For the controller, this field is 000b.
Pwr_Class	3	R/W	Node power class. This field indicates this node power consumption and source characteristics and is replicated in the pwr field (bits 21−23) of the self-ID packet. This field is reset to the state specified by the PC0−PC2 input terminals upon a system (hardware) reset and is unaffected by a bus reset. See Table 10−9.
Watchdog	1	R/W	Watchdog enable. This bit, if set to 1b, enables the port event interrupt (Port_event) bit to be set whenever resume operations begin on any port. This bit is cleared to 0b by system (hardware) reset and is unaffected by bus reset.

Table 10−2. Base Register Field Descriptions (Continued)

FIELD	SIZE	TYPE	DESCRIPTION
ISBR	1	R/W	Initiate short arbitrated bus reset. This bit, if set to 1b, instructs the PHY layer to initiate a short (1.3 µs) arbitrated bus reset at the next opportunity. This bit is cleared to 0b by a bus reset. NOTE: Legacy IEEE Std 1394-1995 compliant PHY layers can not be capable of performing short bus resets. Therefore, initiation of a short bus reset in a network that contains such a legacy device results in a long bus reset being performed.
Loop	1	R/W	Loop detect. This bit is set to 1b when the arbitration controller times out during tree-ID start and may indicate that the bus is configured in a loop. This bit is cleared to 0b by system (hardware) reset or by writing a 1b to this register bit. If the Loop and Watchdog bits are both set and the LLC is or becomes inactive, the PHY layer activates the LLC to service the interrupt. NOTE: If the network is configured in a loop, only those nodes which are part of the loop generate a configuration-timeout interrupt. All other nodes instead time out waiting for the tree-ID and/or self-ID process to complete and then generate a state time-out interrupt and bus-reset.
Pwr_fail	1	R/W	Cable power failure detect. This bit is set to 1b whenever the CPS input transitions from high to low indicating that cable power may be too low for reliable operation. This bit is cleared to 0b by system (hardware) reset or by writing a 1b to this register bit.
Timeout	1	R/W	State time-out interrupt. This bit indicates that a state time-out has occurred (which also causes a bus reset to occur). This bit is cleared to 0b by system (hardware) reset or by writing a 1b to this register bit.
Port_event	1	R/W	Port event detect. This bit is set to 1b upon a change in the bias (unless disabled) connected, disabled, or fault bits for any port for which the port interrupt enable (Int_enable) bit is set. Additionally, if the Watchdog bit is set, the Port_event bit is set to 1b at the start of resume operations on any port. This bit is cleared to 0b by system (hardware) reset or by writing a 1b to this register bit.
Enab_accel	1	R/W	Enable accelerated arbitration. This bit enables the PHY layer to perform the various arbitration acceleration enhancements defined in IEEE Std 1394a-2000 (ACK-accelerated arbitration, asynchronous fly-by concatenation, and isochronous fly-by concatenation). This bit is cleared to 0b by system (hardware) reset and is unaffected by bus reset.
Enab_multi	1	R/W	Enable multispeed concatenated packets. This bit enables the PHY layer to transmit concatenated packets of differing speeds in accordance with the protocols defined in IEEE Std 1394a-2000. This bit is cleared to 0b by system (hardware) reset and is unaffected by bus reset.
Page_Select	3	R/W	Page_Select. This field selects the register page to use when accessing register addresses 8 through 15. This field is cleared to 000b by a system (hardware) reset and is unaffected by bus reset.
Port_Select	4	R/W	Port_Select. This field selects the port when accessing per-port status or control (for example, when one of the port status/control registers is accessed in page 0). Ports are numbered starting at 0. This field is cleared to 0h by system (hardware) reset and is unaffected by bus reset.

10.2 Port Status Register

The port status page provides access to configuration and status information for each of the ports. The port is selected by writing 0 to the Page_Select field and the desired port number to the Port_Select field in base register 7. Table 10−3 shows the configuration of the port status page registers and Table 10−4 shows the corresponding field descriptions. If the selected port is not implemented, all registers in the port status page are read as 0.

Table 10−3. Page 0 (Port Status) Register Configuration

ADDRESS	BIT POSITION							
	0	1	2	3	4	5	6	7
1000	AStat		BStat		Ch	Con	Bias	Dis
1001	Peer_Speed			Int_enable	Fault	Reserved		
1010	Reserved							
1011	Reserved							
1100	Reserved							
1101	Reserved							
1110	Reserved							
1111	Reserved							

Table 10−4. Page 0 (Port Status) Register Field Descriptions

FIELD	SIZE	TYPE	DESCRIPTION
AStat	2	R	TPA line state. This field indicates the TPA line state of the selected port, encoded as follows: Code — Arb Value 11 — Z 10 — 0 01 — 1 00 — invalid
BStat	2	R	TPB line state. This field indicates the TPB line state of the selected port. This field has the same encoding as the AStat field.
Ch	1	R	Child/parent status. A 1b indicates that the selected port is a child port. A 0b indicates that the selected port is the parent port. A disconnected, disabled, or suspended port is reported as a child port. The Ch bit is invalid after a bus reset until tree-ID has completed.
Con	1	R	Debounced port connection status. This bit indicates that the selected port is connected. The connection must be stable for the debounce time of approximately 341 ms for the Con bit to be set to 1b. The Con bit is cleared to 0b by system (hardware) reset and is unaffected by bus reset. NOTE: The Con bit indicates that the port is physically connected to a peer PHY device, but the port is not necessarily active.
Bias	1	R	Debounced incoming cable bias status. A 1b indicates that the selected port is detecting incoming cable bias. The incoming cable bias must be stable for the debounce time of 52 µs for the Bias bit to be set to 1b.
Dis	1	RW	Port disabled control. If the Dis bit is set to 1b, the selected port is disabled. The Dis bit is cleared to 0b by system (hardware) reset (all ports are enabled for normal operation following system (hardware) reset). The Dis bit is not affected by bus reset.
Peer_Speed	3	R	Port peer speed. This field indicates the highest speed capability of the peer PHY device connected to the selected port, encoded as follows: Code — Peer Speed 000 — S100 001 — S200 010 — S400 011−111 — invalid The Peer_Speed field is invalid after a bus reset until self-ID has completed. NOTE: Peer speed codes higher than 010b (S400) are defined in IEEE Std 1394a-2000. However, the controller is only capable of detecting peer speeds up to S400.

Table 10−4. Page 0 (Port Status) Register Field Descriptions (Continued)

FIELD	SIZE	TYPE	DESCRIPTION
Int_enable	1	RW	Port event interrupt enable. When the Int_enable bit is set to 1b, a port event on the selected port sets the port event interrupt (Port_event) bit and notifies the link. This bit is cleared to 0b by a system (hardware) reset and is unaffected by bus reset.
Fault	1	RW	Fault. This bit indicates that a resume-fault or suspend-fault has occurred on the selected port, and that the port is in the suspended state. A resume-fault occurs when a resuming port fails to detect incoming cable bias from its attached peer. A suspend-fault occurs when a suspending port continues to detect incoming cable bias from its attached peer. Writing 1b to this bit clears the fault bit to 0b. This bit is cleared to 0b by system (hardware) reset and is unaffected by bus reset.

10.3 Vendor Identification Register

The vendor identification page identifies the vendor/manufacturer and compliance level. The page is selected by writing 1 to the Page_Select field in base register 7. Table 10−5 shows the configuration of the vendor identification page, and Table 10−6 shows the corresponding field descriptions.

Table 10−5. Page 1 (Vendor ID) Register Configuration

ADDRESS	BIT POSITION							
	0	1	2	3	4	5	6	7
1000	Compliance							
1001	Reserved							
1010	Vendor_ID[0]							
1011	Vendor_ID[1]							
1100	Vendor_ID[2]							
1101	Product_ID[0]							
1110	Product_ID[1]							
1111	Product_ID[2]							

Table 10−6. Page 1 (Vendor ID) Register Field Descriptions

FIELD	SIZE	TYPE	DESCRIPTION
Compliance	8	R	Compliance level. For the controller this field is 01h, indicating compliance with IEEE Std 1394a-2000.
Vendor_ID	24	R	Manufacturer's organizationally unique identifier (OUI). For the controller this field is 08 0028h (Texas Instruments) (the MSB is at register address 1010b).
Product_ID	24	R	Product identifier. For the controller this field is 42 4499h (the MSB is at register address 1101b).

10.4 Vendor-Dependent Register

The vendor-dependent page provides access to the special control features of the controller, as well as to configuration and status information used in manufacturing test and debug. This page is selected by writing 7 to the Page_Select field in base register 7. Table 10−7 shows the configuration of the vendor-dependent page, and Table 10−8 shows the corresponding field descriptions.

Table 10−7. Page 7 (Vendor-Dependent) Register Configuration

ADDRESS	BIT POSITION							
	0	1	2	3	4	5	6	7
1000	NPA	Reserved					Link_Speed	
1001	Reserved for test							
1010	Reserved for test							
1011	Reserved for test							
1100	Reserved for test							
1101	Reserved for test							
1110	Reserved for test							
1111	Reserved for test							

Table 10−8. Page 7 (Vendor-Dependent) Register Field Descriptions

FIELD	SIZE	TYPE	DESCRIPTION
NPA	1	RW	Null-packet actions flag. This bit instructs the PHY layer to not clear fair and priority requests when a null packet is received with arbitration acceleration enabled. If this bit is set to 1b, fair and priority requests are cleared only when a packet of more than 8 bits is received; ACK packets (exactly 8 data bits), null packets (no data bits), and malformed packets (less than 8 data bits) do not clear fair and priority requests. If this bit is cleared to 0b, fair and priority requests are cleared when any non-ACK packet is received, including null packets or malformed packets of less than 8 bits. This bit is cleared to 0b by system (hardware) reset and is unaffected by bus reset.
Link_Speed	2	RW	Link speed. This field indicates the top speed capability of the attached LLC. Encoding is as follows: Code — Speed 00 — S100 01 — S200 10 — S400 11 — illegal This field is replicated in the sp field of the self-ID packet to indicate the speed capability of the node (PHY and LLC in combination). However, this field does not affect the PHY speed capability indicated to peer PHYs during self-ID; the PCIxx12 PHY layer identifies itself as S400 capable to its peers regardless of the value in this field. This field is set to 10b (S400) by system (hardware) reset and is unaffected by bus reset.

10.5 Power-Class Programming

The PC0–PC2 terminals are programmed to set the default value of the power-class indicated in the pwr field (bits 21–23) of the transmitted self-ID packet. Table 10−9 shows the descriptions of the various power classes. The default power-class value is loaded following a system (hardware) reset, but is overridden by any value subsequently loaded into the Pwr_Class field in register 4.

Table 10−9. Power Class Descriptions

PC0–PC2	DESCRIPTION
000	Node does not need power and does not repeat power.
001	Node is self-powered and provides a minimum of 15 W to the bus.
010	Node is self-powered and provides a minimum of 30 W to the bus.
011	Node is self-powered and provides a minimum of 45 W to the bus.
100	Node may be powered from the bus and is using up to 3 W. No additional power is needed to enable the link.
101	Reserved
110	Node is powered from the bus and uses up to 3 W. An additional 3 W is needed to enable the link.
111	Node is powered from the bus and uses up to 3 W. An additional 7 W is needed to enable the link.

11 Flash Media Controller Programming Model

This section describes the internal PCI configuration registers used to program the the PCI6412, PCI6612, PCI7402, PCI7412, PCI7612, PCI8402, and PCI8412 flash media controller interface. All registers are detailed in the same format: a brief description for each register is followed by the register offset and a bit table describing the reset state for each register.

A bit description table, typically included when the register contains bits of more than one type or purpose, indicates bit field names, a detailed field description, and field access tags which appear in the *type* column. Table 4−1 describes the field access tags.

The controller is a multifunction PCI device. The flash media controller core is integrated as PCI function 2. The function 2 configuration header is compliant with the *PCI Local Bus Specification* as a standard header. Table 11−1 illustrates the configuration header that includes both the predefined portion of the configuration space and the user-definable registers.

Table 11−1. Function 2 Configuration Register Map

REGISTER NAME				OFFSET
Device ID		Vendor ID		00h
Status		Command		04h
Class code			Revision ID	08h
BIST	Header type	Latency timer	Cache line size	0Ch
Flash media base address				10h
Reserved				14h−28h
Subsystem ID ‡		Subsystem vendor ID ‡		2Ch
Reserved				30h
Reserved			PCI power-management capabilities pointer	34h
Reserved				38h
Maximum latency	Minimum grant	Interrupt pin	Interrupt line	3Ch
Reserved				40h
Power-management capabilities		Next item pointer	Capability ID	44h
PM data (Reserved)	PMCSR_BSE	Power-management control and status ‡		48h
Reserved		General control ‡		4Ch
Subsystem access				50h
Diagnostic ‡				54h
Reserved				58h−FCh

‡ One or more bits in this register are cleared only by the assertion of $\overline{\text{GRST}}$.

11.1 Vendor ID Register

The vendor ID register contains a value allocated by the PCI SIG and identifies the manufacturer of the PCI device. The vendor ID assigned to Texas Instruments is 104Ch.

Function 2 offset: 00h
Register type: Read-only
Default value: 104Ch

BIT NUMBER	15	14	13	12	11	10	9	8	7	6	5	4	3	2	1	0
RESET STATE	0	0	0	1	0	0	0	0	0	1	0	0	1	1	0	0

11.2 Device ID Register

The device ID register contains a value assigned to the flash media controller by Texas Instruments. The device identification for the flash media controller is 803Bh.

Function 2 offset: 02h
Register type: Read-only
Default value: 803Bh

BIT NUMBER	15	14	13	12	11	10	9	8	7	6	5	4	3	2	1	0
RESET STATE	1	0	0	0	0	0	0	0	0	0	1	1	1	0	1	1

11.3 Command Register

The command register provides control over the PCIxx12 interface to the PCI bus. All bit functions adhere to the definitions in the *PCI Local Bus Specification*, as seen in the following bit descriptions. See Table 11−2 for a complete description of the register contents.

Function 2 offset: 04h
Register type: Read/Write, Read-only
Default value: 0000h

BIT NUMBER	15	14	13	12	11	10	9	8	7	6	5	4	3	2	1	0
RESET STATE	0	0	0	0	0	0	0	0	0	0	0	0	0	0	0	0

Table 11−2. Command Register Description

BIT	FIELD NAME	TYPE	DESCRIPTION
15−11	RSVD	R	Reserved. Bits 15−11 return 00000b when read.
10	INT_DISABLE	RW	$\overline{\text{INTx}}$ disable. When set to 1b, this bit disables the function from asserting interrupts on the $\overline{\text{INTx}}$ signals. 0 = $\overline{\text{INTx}}$ assertion is enabled (default) 1 = $\overline{\text{INTx}}$ assertion is disabled
9	FBB_ENB	R	Fast back-to-back enable. The flash media interface does not generate fast back-to-back transactions; therefore, bit 9 returns 0b when read.
8	SERR_ENB	RW	$\overline{\text{SERR}}$ enable. When bit 8 is set to 1b, the flash media interface $\overline{\text{SERR}}$ driver is enabled. $\overline{\text{SERR}}$ can be asserted after detecting an address parity error on the PCI bus.
7	STEP_ENB	R	Address/data stepping control. The flash media interface does not support address/data stepping; therefore, bit 7 is hardwired to 0b.
6	PERR_ENB	RW	Parity error enable. When bit 6 is set to 1b, the flash media interface is enabled to drive $\overline{\text{PERR}}$ response to parity errors through the $\overline{\text{PERR}}$ signal.
5	VGA_ENB	R	VGA palette snoop enable. The flash media interface does not feature VGA palette snooping; therefore, bit 5 returns 0b when read.
4	MWI_ENB	RW	Memory write and invalidate enable. The flash media controller does not generate memory write invalidate transactions; therefore, bit 4 returns 0b when read.
3	SPECIAL	R	Special cycle enable. The flash media interface does not respond to special cycle transactions; therefore, bit 3 returns 0b when read.
2	MASTER_ENB	RW	Bus master enable. When bit 2 is set to 1b, the flash media interface is enabled to initiate cycles on the PCI bus.
1	MEMORY_ENB	RW	Memory response enable. Setting bit 1 to 1b enables the flash media interface to respond to memory cycles on the PCI bus.
0	IO_ENB	R	I/O space enable. The flash media interface does not implement any I/O-mapped functionality; therefore, bit 0 returns 0b when read.

11.4 Status Register

The status register provides device information to the host system. All bit functions adhere to the definitions in the *PCI Local Bus Specification*, as seen in the following bit descriptions. Bits in this register may be read normally. A bit in the status register is reset when 1b is written to that bit location; a 0b written to a bit location has no effect. See Table 11−3 for a complete description of the register contents.

Function 2 offset: 06h
Register type: Read/Clear/Update, Read-only
Default value: 0210h

BIT NUMBER	15	14	13	12	11	10	9	8	7	6	5	4	3	2	1	0
RESET STATE	0	0	0	0	0	0	1	0	0	0	0	1	0	0	0	0

Table 11−3. Status Register Description

BIT	FIELD NAME	TYPE	DESCRIPTION
15	PAR_ERR	RCU	Detected parity error. Bit 15 is set to 1b when either an address parity or data parity error is detected.
14	SYS_ERR	RCU	Signaled system error. Bit 14 is set to 1b when $\overline{\text{SERR}}$ is enabled and the flash media controller has signaled a system error to the host.
13	MABORT	RCU	Received master abort. Bit 13 is set to 1b when a cycle initiated by the flash media controller on the PCI bus has been terminated by a master abort.
12	TABORT_REC	RCU	Received target abort. Bit 12 is set to 1b when a cycle initiated by the flash media controller on the PCI bus was terminated by a target abort.
11	TABORT_SIG	RCU	Signaled target abort. Bit 11 is set to 1b by the flash media controller when it terminates a transaction on the PCI bus with a target abort.
10−9	PCI_SPEED	R	DEVSEL timing. Bits 10 and 9 encode the timing of $\overline{\text{DEVSEL}}$ and are hardwired to 01b, indicating that the flash media controller asserts this signal at a medium speed on nonconfiguration cycle accesses.
8	DATAPAR	RCU	Data parity error detected. Bit 8 is set to 1b when the following conditions have been met: a. $\overline{\text{PERR}}$ was asserted by any PCI device including the flash media controller. b. The flash media controller was the bus master during the data parity error. c. Bit 6 (PERR_EN) in the command register at offset 04h in the PCI configuration space (see Section 11.3) is set to 1b.
7	FBB_CAP	R	Fast back-to-back capable. The flash media controller cannot accept fast back-to-back transactions; therefore, bit 7 is hardwired to 0b.
6	UDF	R	User-definable features (UDF) supported. The flash media controller does not support the UDF; therefore, bit 6 is hardwired to 0b.
5	66MHZ	R	66-MHz capable. The flash media controller operates at a maximum PCLK frequency of 33 MHz; therefore, bit 5 is hardwired to 0b.
4	CAPLIST	R	Capabilities list. Bit 4 returns 1b when read, indicating that the flash media controller supports additional PCI capabilities.
3	INT_STATUS	RU	Interrupt status. This bit reflects the interrupt status of the function. Only when bit 10 (INT_DISABLE) in the command register (offset 04h, see Section 11.3) is a 0b and this bit is 1b, is the function's $\overline{\text{INTx}}$ signal asserted. Setting the INT_DISABLE bit to 1b has no effect on the state of this bit. This bit is set only when a valid interrupt condition exists. This bit is not set when an interrupt condition exists and signaling of that event is not enabled.
2−0	RSVD	R	Reserved. Bits 2−0 return 000b when read.

11.5 Class Code and Revision ID Register

The class code and revision ID register categorizes the base class, subclass, and programming interface of the function. The base class is 01h, identifying the controller as a mass storage controller. The subclass is 80h, identifying the function as other mass storage controller, and the programming interface is 00h. Furthermore, the TI chip revision is indicated in the least significant byte (00h). See Table 11−4 for a complete description of the register contents.

Function 2 offset: 08h
Register type: Read-only
Default value: 0180 0000h

BIT NUMBER	31	30	29	28	27	26	25	24	23	22	21	20	19	18	17	16
RESET STATE	0	0	0	0	0	0	0	1	1	0	0	0	0	0	0	0
BIT NUMBER	**15**	**14**	**13**	**12**	**11**	**10**	**9**	**8**	**7**	**6**	**5**	**4**	**3**	**2**	**1**	**0**
RESET STATE	0	0	0	0	0	0	0	0	0	0	0	0	0	0	0	0

Table 11−4. Class Code and Revision ID Register Description

BIT	FIELD NAME	TYPE	DESCRIPTION
31−24	BASECLASS	R	Base class. This field returns 01h when read, which classifies the function as a mass storage controller.
23−16	SUBCLASS	R	Subclass. This field returns 80h when read, which specifically classifies the function as other mass storage controller.
15−8	PGMIF	R	Programming interface. This field returns 00h when read.
7−0	CHIPREV	R	Silicon revision. This field returns 00h when read, which indicates the silicon revision of the flash media controller.

11.6 Latency Timer and Class Cache Line Size Register

The latency timer and class cache line size register is programmed by host BIOS to indicate system cache line size and the latency timer associated with the flash media controller. See Table 11−5 for a complete description of the register contents.

Function 2 offset: 0Ch
Register type: Read/Write
Default value: 0000h

BIT NUMBER	15	14	13	12	11	10	9	8	7	6	5	4	3	2	1	0
RESET STATE	0	0	0	0	0	0	0	0	0	0	0	0	0	0	0	0

Table 11−5. Latency Timer and Class Cache Line Size Register Description

BIT	FIELD NAME	TYPE	DESCRIPTION
15−8	LATENCY_TIMER	RW	PCI latency timer. The value in this register specifies the latency timer for the flash media controller, in units of PCI clock cycles. When the flash media controller is a PCI bus initiator and asserts $\overline{\text{FRAME}}$, the latency timer begins counting from zero. If the latency timer expires before the flash media transaction has terminated, then the flash media controller terminates the transaction when its $\overline{\text{GNT}}$ is deasserted.
7−0	CACHELINE_SZ	RW	Cache line size. This value is used by the flash media controller during memory write and invalidate, memory-read line, and memory-read multiple transactions.

11.7 Header Type and BIST Register

The header type and built-in self-test (BIST) register indicates the flash media controller PCI header type and no built-in self-test. See Table 11−6 for a complete description of the register contents.

Function 2 offset: 0Eh
Register type: Read-only
Default value: 0080h

BIT NUMBER	15	14	13	12	11	10	9	8	7	6	5	4	3	2	1	0
RESET STATE	0	0	0	0	0	0	0	0	1	0	0	0	0	0	0	0

Table 11−6. Header Type and BIST Register Description

BIT	FIELD NAME	TYPE	DESCRIPTION
15−8	BIST	R	Built-in self-test. The flash media controller does not include a BIST; therefore, this field returns 00h when read.
7−0	HEADER_TYPE	R	PCI header type. The flash media controller includes the standard PCI header. Bit 7 indicates if the flash media is a multifunction device.

11.8 Flash Media Base Address Register

The flash media base address register specifies the base address of the memory-mapped interface registers. Since the implementation of the flash media controller core in the controller contains 2 sockets, the size of the base address register is 4096 bytes. See Table 11−7 for a complete description of the register contents.

Function 2 offset: 10h
Register type: Read/Write, Read-only
Default value: 0000 0000h

BIT NUMBER	31	30	29	28	27	26	25	24	23	22	21	20	19	18	17	16
RESET STATE	0	0	0	0	0	0	0	0	0	0	0	0	0	0	0	0
BIT NUMBER	**15**	**14**	**13**	**12**	**11**	**10**	**9**	**8**	**7**	**6**	**5**	**4**	**3**	**2**	**1**	**0**
RESET STATE	0	0	0	0	0	0	0	0	0	0	0	0	0	0	0	0

Table 11−7. Flash Media Base Address Register Description

BIT	FIELD NAME	TYPE	DESCRIPTION
31−13	BAR	RW	Base address. This field specifies the upper bits of the 32-bit starting base address.
12−4	RSVD	R	Reserved. Bits 12−4 return 0s when read to indicate that the size of the base address is 8192 bytes.
3	PREFETCHABLE	R	Prefetchable. Since this base address is not prefetchable, bit 3 returns 0b when read.
2−1	RSVD	R	Reserved. Bits 2−1 return 00b when read.
0	MEM_INDICATOR	R	Memory space indicator. Bit 0 is hardwired to 0b to indicate that the base address maps into memory space.

11.9 Subsystem Vendor Identification Register

The subsystem identification register, used for system and option card identification purposes, may be required for certain operating systems. This read-only register is initialized through the EEPROM and can be written through the subsystem access register at PCI offset 50h (see Section 11.22). All bits in this register are reset by $\overline{\text{GRST}}$ only.

Function 2 offset: 2Ch
Register type: Read/Update
Default value: 0000h

BIT NUMBER	15	14	13	12	11	10	9	8	7	6	5	4	3	2	1	0
RESET STATE	0	0	0	0	0	0	0	0	0	0	0	0	0	0	0	0

11.10 Subsystem Identification Register

The subsystem identification register, used for system and option card identification purposes, may be required for certain operating systems. This read-only register is initialized through the EEPROM and can be written through the subsystem access register at PCI offset 50h (see Section 11.22). All bits in this register are reset by $\overline{\text{GRST}}$ only.

Function 2 offset: 2Eh
Register type: Read/Update
Default value: 0000h

BIT NUMBER	15	14	13	12	11	10	9	8	7	6	5	4	3	2	1	0
RESET STATE	0	0	0	0	0	0	0	0	0	0	0	0	0	0	0	0

11.11 Capabilities Pointer Register

The power-management capabilities pointer register provides a pointer into the PCI configuration header where the power-management register block resides. Since the PCI power-management registers begin at 44h, this read-only register is hardwired to 44h.

Function 2 offset: 34h
Register type: Read-only
Default value: 44h

BIT NUMBER	7	6	5	4	3	2	1	0
RESET STATE	0	1	0	0	0	1	0	0

11.12 Interrupt Line Register

The interrupt line register is programmed by the system and indicates to the software which interrupt line the flash media interface has assigned to it. The default value of this register is FFh, indicating that an interrupt line has not yet been assigned to the function.

Function 2 offset: 3Ch
Register type: Read/Write
Default value: FFh

BIT NUMBER	7	6	5	4	3	2	1	0
RESET STATE	1	1	1	1	1	1	1	1

11.13 Interrupt Pin Register

This register decodes the interrupt select inputs and returns the proper interrupt value based on Table 11−8, indicating that the flash media interface uses an interrupt. If one of the USE_INTx terminals is asserted, the interrupt select bits are ignored, and this register returns the interrupt value for the highest priority USE_INTx terminal that is asserted. If bit 28, the tie-all bit (TIEALL), in the system control register (PCI offset 80h, see Section 4.29) is set to 1b, then the controller asserts the USE_INTA input to the flash media controller core. If bit 28 (TIEALL) in the system control register (PCI offset 80h, see Section 4.29) is set to 0b, then none of the USE_INTx inputs are asserted and the interrupt for the flash media function is selected by the INT_SEL bits in the flash media general control register.

Function 2 offset: 3Dh
Register type: Read-only
Default value: 0Xh

BIT NUMBER	7	6	5	4	3	2	1	0
RESET STATE	0	0	0	0	0	X	X	X

Table 11−8. PCI Interrupt Pin Register

INT_SEL BITS	USE_INTA	INTPIN
00	0	01h ($\overline{\text{INTA}}$)
01	0	02h ($\overline{\text{INTB}}$)
10	0	03h ($\overline{\text{INTC}}$)
11	0	04h ($\overline{\text{INTD}}$)
XX	1	01h ($\overline{\text{INTA}}$)

11.14 Minimum Grant Register

The minimum grant register contains the minimum grant value for the flash media controller core.

Function 2 offset: 3Eh
Register type: Read/Update
Default value: 07h

BIT NUMBER	7	6	5	4	3	2	1	0
RESET STATE	0	0	0	0	0	1	1	1

Table 11−9. Minimum Grant Register Description

BIT	FIELD NAME	TYPE	DESCRIPTION
7−0	MIN_GNT	RU	Minimum grant. The contents of this field may be used by host BIOS to assign a latency timer register value to the flash media controller. The default for this register indicates that the flash media controller may need to sustain burst transfers for nearly 64 µs and thus request a large value be programmed in bits 15−8 of the latency timer and class cache line size register at offset 0Ch in the PCI configuration space (see Section 11.6).

11.15 Maximum Latency Register

The maximum latency register contains the maximum latency value for the flash media controller core.

Function 2 offset: 3Eh
Register type: Read/Update
Default value: 04h

BIT NUMBER	7	6	5	4	3	2	1	0
RESET STATE	0	0	0	0	0	1	0	0

Table 11−10. Maximum Latency Register Description

BIT	FIELD NAME	TYPE	DESCRIPTION
7−0	MAX_LAT	RU	Maximum latency. The contents of this field may be used by host BIOS to assign an arbitration priority level to the flash media controller. The default for this register indicates that the flash media controller may need to access the PCI bus as often as every 0.25 µs; thus, an extremely high priority level is requested. The contents of this field may also be loaded through the serial EEPROM.

11.16 Capability ID and Next Item Pointer Registers

The capability ID and next item pointer register identifies the linked-list capability item and provides a pointer to the next capability item. See Table 11−11 for a complete description of the register contents.

Function 2 offset: 44h
Register type: Read-only
Default value: 0001h

BIT NUMBER	15	14	13	12	11	10	9	8	7	6	5	4	3	2	1	0
RESET STATE	0	0	0	0	0	0	0	0	0	0	0	0	0	0	0	1

Table 11−11. Capability ID and Next Item Pointer Registers Description

BIT	FIELD NAME	TYPE	DESCRIPTION
15−8	NEXT_ITEM	R	Next item pointer. The flash media controller supports only one additional capability, PCI power management, that is communicated to the system through the extended capabilities list; therefore, this field returns 00h when read.
7−0	CAPABILITY_ID	R	Capability identification. This field returns 01h when read, which is the unique ID assigned by the PCI SIG for PCI power-management capability.

11.17 Power-Management Capabilities Register

The power-management capabilities register indicates the capabilities of the flash media controller related to PCI power management. See Table 11−12 for a complete description of the register contents.

Function 2 offset: 46h
Register type: Read/Update, Read-only
Default value: 7E02h

BIT NUMBER	15	14	13	12	11	10	9	8	7	6	5	4	3	2	1	0
RESET STATE	0	1	1	1	1	1	1	0	0	0	0	0	0	0	1	0

Table 11−12. Power-Management Capabilities Register Description

BIT	FIELD NAME	TYPE	DESCRIPTION
15	PME_D3COLD	RU	$\overline{PME}$ support from $D3_{cold}$. This bit can be set to 1b or cleared to 0b via bit 4 (D3_COLD) in the general control register at offset 4Ch in the PCI configuration space (see Section 11.21). When this bit is set to 1b, it indicates that the controller is capable of generating a $\overline{PME}$ wake event from $D3_{cold}$. This bit state is dependent upon the V_{AUX} implementation and may be configured by using bit 4 (D3_COLD) in the general control register (see Section 11.21).
14−11	PME_SUPPORT	R	$\overline{PME}$ support. This 4-bit field indicates the power states from which the flash media interface may assert $\overline{PME}$. This field returns a value of 1111b by default, indicating that $\overline{PME}$ may be asserted from the $D3_{hot}$, D2, D1, and D0 power states.
10	D2_SUPPORT	R	D2 support. Bit 10 is hardwired to 1b, indicating that the flash media controller supports the D2 power state.
9	D1_SUPPORT	R	D1 support. Bit 9 is hardwired to 1b, indicating that the flash media controller supports the D1 power state.
8−6	AUX_CURRENT	R	Auxiliary current. This 3-bit field reports the 3.3-V_{AUX} auxiliary current requirements. When bit 15 (PME_D3COLD) is cleared, this field returns 000b; otherwise, it returns 001b. 000b = Self-powered 001b = 55 mA (3.3-V_{AUX} maximum current required)
5	DSI	R	Device-specific initialization. This bit returns 0b when read, indicating that the flash media controller does not require special initialization beyond the standard PCI configuration header before a generic class driver is able to use it.
4	RSVD	R	Reserved. Bit 4 returns 0b when read.
3	PME_CLK	R	$\overline{PME}$ clock. This bit returns 0b when read, indicating that the PCI clock is not required for the flash media controller to generate $\overline{PME}$.
2−0	PM_VERSION	R	Power-management version. If bit 7 (PCI_PM_VERSION_CTRL) in the general control register (offset 4Ch, see Section 11.21) is 0b, this field returns 010b indicating *PCI Bus Power Management Interface Specification* (Revision 1.1) compatibility. If the PCI_PM_VERSION_CTRL bit is 1b, this field returns 011b indicating *PCI Bus Power Management Interface Specification* (Revision 1.2) compatibility.

11.18 Power-Management Control and Status Register

The power-management control and status register implements the control and status of the flash media controller. This register is not affected by the internally generated reset caused by the transition from the $D3_{hot}$ to D0 state. See Table 11−13 for a complete description of the register contents.

Function 2 offset: 48h
Register type: Read/Clear, Read/Write, Read-only
Default value: 0000h

BIT NUMBER	15	14	13	12	11	10	9	8	7	6	5	4	3	2	1	0
RESET STATE	0	0	0	0	0	0	0	0	0	0	0	0	0	0	0	0

Table 11−13. Power-Management Control and Status Register Description

BIT	FIELD NAME	TYPE	DESCRIPTION
15 ‡	PME_STAT	RCU	$\overline{PME}$ status. This bit defaults to 0b.
14−13	DATA_SCALE	R	This field returns 00b, because the data register is not implemented.
12−9	DATA_SELECT	R	This field returns 0h, because the data register is not implemented.
8 ‡	PME_EN	RW	$\overline{PME}$ enable. Enables $\overline{PME}$ signaling. assertion is disabled.
7−2	RSVD	R	Reserved. Bits 7−2 return 00 0000b when read.
1−0 ‡	PWR_STATE	RW	Power state. This 2-bit field determines the current power state and sets the flash media controller to a new power state. This field is encoded as follows: 00 = Current power state is D0. 01 = Current power state is D1. 10 = Current power state is D2. 11 = Current power state is $D3_{hot}$.

‡ One or more bits in this register are cleared only by the assertion of $\overline{GRST}$.

11.19 Power-Management Bridge Support Extension Register

The power-management bridge support extension register provides extended power-management features not applicable to the flash media controller; thus, it is read-only and returns 00h when read.

Function 2 offset: 4Ah
Register type: Read-only
Default value: 00h

BIT NUMBER	7	6	5	4	3	2	1	0
RESET STATE	0	0	0	0	0	0	0	0

11.20 Power-Management Data Register

The power-management bridge support extension register provides extended power-management features not applicable to the flash media controller; thus, it is read-only and returns 00h when read.

Function 2 offset: 4Bh
Register type: Read-only
Default value: 00h

BIT NUMBER	7	6	5	4	3	2	1	0
RESET STATE	0	0	0	0	0	0	0	0

11.21 General Control Register

The general control register provides miscellaneous PCI-related configuration. See Table 11−14 for a complete description of the register contents.

Function 2 offset: 4Ch
Register type: Read/Write, Read-only
Default value: 00h

BIT NUMBER	7	6	5	4	3	2	1	0
RESET STATE	0	0	0	0	0	0	0	0

Table 11−14. General Control Register

BIT	FIELD NAME	TYPE	DESCRIPTION
7 ‡	PCI_PM_ VERSION_CTRL	RW	PCI power-management version control. This bit controls the value reported in bits 2−0 (PM_VERSION) of the power-management capabilities register (offset 46h, see Section 11.17). 0 = PM_VERSION field reports 010b for *PCI Bus Power Management Interface Specification* (Revision 1.1) compatability. 1 = PM_VERSION field reports 011b for *PCI Bus Power Management Interface Specification* (Revision 1.2) compatability.
6−5 ‡	INT_SEL	RW	Interrupt select. These bits are program the INTPIN register and set which interrupt output is used. This field is ignored if one of the USE_INTx terminals is asserted. 00 = $\overline{\text{INTA}}$ 01 = $\overline{\text{INTB}}$ 10 = $\overline{\text{INTC}}$ 11 = $\overline{\text{INTD}}$
4 ‡	D3_COLD	RW	$D3_{cold}$ $\overline{\text{PME}}$ support. This bit sets and clears bit 15 (PME_D3COLD) in the power-management capabilities register (offset 46h, see Section 11.17).
3	RSVD	R	Reserved. Bit 3 returns 0b when read.
2 ‡	SM_DIS	RW	SmartMedia disable. Setting this bit disables support for SmartMedia cards. The flash media controller reports a SmardMedia card as an unsupported card if this bit is set. If this bit is set, then all of the SM_SUPPORT bits in the socket enumeration register are 0b.
1 ‡	MMC_SD_DIS	RW	MMC/SD disable. Setting this bit disables support for MMC/SD cards. The flash media controller reports a MMC/SD card as an unsupported card if this bit is set. If this bit is set, then all of the SD_SUPPORT bits in the socket enumeration register are 0b.
0 ‡	MS_DIS	RW	Memory Stick disable. Setting this bit disables support for Memory Stick cards. The flash media controller reports a Memory Stick card as an unsupported card if this bit is set. If this bit is set, then all of the MS_SUPPORT bits in the socket enumeration register are 0b.

‡ One or more bits in this register are cleared only by the assertion of $\overline{\text{GRST}}$.

11.22 Subsystem Access Register

The contents of the subsystem access register are aliased to the subsystem vendor ID and subsystem ID registers at PCI offsets 2Ch and 2Eh, respectively. See Table 11−15 for a complete description of the register contents. All bits in this register are reset by $\overline{\text{GRST}}$ only.

Function 2 offset: 50h
Register type: Read/Write
Default value: 0000 0000h

BIT NUMBER	31	30	29	28	27	26	25	24	23	22	21	20	19	18	17	16
RESET STATE	0	0	0	0	0	0	0	0	0	0	0	0	0	0	0	0
BIT NUMBER	**15**	**14**	**13**	**12**	**11**	**10**	**9**	**8**	**7**	**6**	**5**	**4**	**3**	**2**	**1**	**0**
RESET STATE	0	0	0	0	0	0	0	0	0	0	0	0	0	0	0	0

Table 11−15. Subsystem Access Register Description

BIT	FIELD NAME	TYPE	DESCRIPTION
31−16	SubsystemID	RW	Subsystem device ID. The value written to this field is aliased to the subsystem ID register at PCI offset 2Eh.
15−0	SubsystemVendorID	RW	Subsystem vendor ID. The value written to this field is aliased to the subsystem vendor ID register at PCI offset 2Ch.

11.23 Diagnostic Register

This register programs the M and N inputs to the PLL and enables the diagnostic modes. The default values for M and N in this register set the PLL output to be 80 MHz, which is divided to get the 40 MHz and 20 MHz needed by the flash media cores. See Table 11−16 for a complete description of the register contents. All bits in this register are reset by $\overline{\text{GRST}}$ only.

Function 2 offset: 54h
Register type: Read-only, Read/Write
Default value: 0000 0105h

BIT NUMBER	31	30	29	28	27	26	25	24	23	22	21	20	19	18	17	16
RESET STATE	0	0	0	0	0	0	0	0	0	0	0	0	0	0	0	0
BIT NUMBER	**15**	**14**	**13**	**12**	**11**	**10**	**9**	**8**	**7**	**6**	**5**	**4**	**3**	**2**	**1**	**0**
RESET STATE	0	0	0	0	0	0	0	1	0	0	0	0	0	1	0	1

Table 11−16. Diagnostic Register Description

BIT	SIGNAL	TYPE	FUNCTION
31−17	TBD_CTRL	R	PLL control bits. These bits are reserved for PLL control and test bits.
16	DIAGNOSTIC	RW	Diagnostic test bit. This test bit shortens the PLL clock CLK_VALID time and shortens the card detect debounce times for simulation and TDL.
15−11	RSVD	R	Reserved. Bits 15−11 return 00000b when read.
10−8	PLL_N	RW	PLL_N input. The default value of this field is 001b.
7−5	RSVD	R	Reserved. Bits 7−5 return 000b when read.
4−0	PLL_M	RW	PLL_M input. The default value of this field is 05h.

12 SD Host Controller Programming Model

This section describes the internal PCI configuration registers used to program the PCI6412, PCI6612, PCI7402, PCI7412, PCI7612, PCI8402, and PCI8412 SD host controller interface. All registers are detailed in the same format: a brief description for each register is followed by the register offset and a bit table describing the reset state for each register.

A bit description table, typically included when the register contains bits of more than one type or purpose, indicates bit field names, a detailed field description, and field access tags which appear in the *type* column. Table 4−1 describes the field access tags.

The controller is a multifunction PCI device. The SD host controller core is integrated as PCI function 3. The function 3 configuration header is compliant with the *PCI Local Bus Specification* as a standard header. Table 12−1 illustrates the configuration header that includes both the predefined portion of the configuration space and the user-definable registers.

Table 12−1. Function 3 Configuration Register Map

REGISTER NAME				OFFSET
Device ID		Vendor ID		00h
Status		Command		04h
Class code			Revision ID	08h
BIST	Header type	Latency timer	Cache line size	0Ch
Slot 0 base address				10h
Slot 1 base address				14h
Slot 2 base address				18h
Reserved				1Ch−28h
Subsystem ID ‡		Subsystem vendor ID ‡		2Ch
Reserved				30h
Reserved			PCI power-management capabilities pointer	34h
Reserved				38h
Maximum latency	Minimum grant	Interrupt pin	Interrupt line	3Ch
Reserved			Slot information	40h
Reserved				44h−7Ch
Power-management capabilities		Next item pointer	Capability ID	80h
PM data (Reserved)	PMCSR_BSE	Power-management control and status ‡		84h
Reserved		General control ‡		88h
Subsystem alias				8Ch
Diagnostic ‡				90h
Reserved			Slot 0 3.3-V maximum current	94h
Reserved			Slot 1 3.3-V maximum current	98h
Reserved			Slot 2 3.3-V maximum current	9Ch
Reserved				A0h−FCh

‡ One or more bits in this register are cleared only by the assertion of $\overline{\text{GRST}}$.

12.1 Vendor ID Register

The vendor ID register contains a value allocated by the PCI SIG and identifies the manufacturer of the PCI device. The vendor ID assigned to Texas Instruments is 104Ch.

Function 3 register offset: 00h
Register type: Read-only
Default value: 104Ch

BIT NUMBER	15	14	13	12	11	10	9	8	7	6	5	4	3	2	1	0
RESET STATE	0	0	0	1	0	0	0	0	0	1	0	0	1	1	0	0

12.2 Device ID Register

The device ID register contains a value assigned to the SD host controller by Texas Instruments. The device identification for the SD host controller is 803Ch.

Function 3 register offset: 02h
Register type: Read-only
Default value: 803Ch

BIT NUMBER	15	14	13	12	11	10	9	8	7	6	5	4	3	2	1	0
RESET STATE	1	0	0	0	0	0	0	0	0	0	1	1	1	1	0	0

12.3 Command Register

The command register provides control over the SD host controller interface to the PCI bus. All bit functions adhere to the definitions in the *PCI Local Bus Specification*, as seen in the following bit descriptions. See Table 12−2 for a complete description of the register contents.

Function 3 register offset: 04h
Register type: Read/Write, Read-only
Default value: 0000h

BIT NUMBER	15	14	13	12	11	10	9	8	7	6	5	4	3	2	1	0
RESET STATE	0	0	0	0	0	0	0	0	0	0	0	0	0	0	0	0

Table 12−2. Command Register Description

BIT	FIELD NAME	TYPE	DESCRIPTION
15−11	RSVD	R	Reserved. Bits 15−11 return 00000b when read.
10	INT_DISABLE	RW	$\overline{\text{INTx}}$ disable. When set to 1b, this bit disables the function from asserting interrupts on the $\overline{\text{INTx}}$ signals. 0 = $\overline{\text{INTx}}$ assertion is enabled (default) 1 = $\overline{\text{INTx}}$ assertion is disabled
9	FBB_ENB	R	Fast back-to-back enable. The SD host controller does not generate fast back-to-back transactions; therefore, bit 9 returns 0b when read.
8	SERR_ENB	RW	$\overline{\text{SERR}}$ enable. When bit 8 is set to 1b, the SD host controller $\overline{\text{SERR}}$ driver is enabled. $\overline{\text{SERR}}$ can be asserted after detecting an address parity error on the PCI bus.
7	STEP_ENB	R	Address/data stepping control. The SD host controller does not support address/data stepping; therefore, bit 7 is hardwired to 0b.
6	PERR_ENB	RW	Parity error enable. When bit 6 is set to 1b, the SD host controller is enabled to drive $\overline{\text{PERR}}$ response to parity errors through the $\overline{\text{PERR}}$ signal.
5	VGA_ENB	R	VGA palette snoop enable. The SD host controller does not feature VGA palette snooping; therefore, bit 5 returns 0b when read.
4	MWI_ENB	RW	Memory write and invalidate enable. The SD host controller does not generate memory write invalidate transactions; therefore, bit 4 returns 0b when read.
3	SPECIAL	R	Special cycle enable. The SD host controller does not respond to special cycle transactions; therefore, bit 3 returns 0b when read.
2	MASTER_ENB	RW	Bus master enable. When bit 2 is set to 1b, the SD host controller is enabled to initiate cycles on the PCI bus.
1	MEMORY_ENB	RW	Memory response enable. Setting bit 1 to 1b enables the SD host controller to respond to memory cycles on the PCI bus.
0	IO_ENB	R	I/O space enable. The SD host controller does not implement any I/O-mapped functionality; therefore, bit 0 returns 0b when read.

12.4 Status Register

The status register provides device information to the host system. All bit functions adhere to the definitions in the *PCI Local Bus Specification*, as seen in the following bit descriptions. Bits in this register may be read normally. A bit in the status register is reset when 1b is written to that bit location; a 0b written to a bit location has no effect. See Table 12−3 for a complete description of the register contents.

Function 3 register offset: 06h
Register type: Read/Clear/Update, Read-only
Default value: 0210h

BIT NUMBER	15	14	13	12	11	10	9	8	7	6	5	4	3	2	1	0
RESET STATE	0	0	0	0	0	0	1	0	0	0	0	1	0	0	0	0

Table 12−3. Status Register Description

BIT	FIELD NAME	TYPE	DESCRIPTION
15	PAR_ERR	RCU	Detected parity error. Bit 15 is set to 1b when either an address parity or data parity error is detected.
14	SYS_ERR	RCU	Signaled system error. Bit 14 is set to 1b when $\overline{\text{SERR}}$ is enabled and the SD host controller has signaled a system error to the host.
13	MABORT	RCU	Received master abort. Bit 13 is set to 1b when a cycle initiated by the SD host controller on the PCI bus has been terminated by a master abort.
12	TABORT_REC	RCU	Received target abort. Bit 12 is set to 1b when a cycle initiated by the SD host controller on the PCI bus was terminated by a target abort.
11	TABORT_SIG	RCU	Signaled target abort. Bit 11 is set to 1b by the SD host controller when it terminates a transaction on the PCI bus with a target abort.
10−9	PCI_SPEED	R	DEVSEL timing. Bits 10 and 9 encode the timing of $\overline{\text{DEVSEL}}$ and are hardwired to 01b, indicating that the SD host controller asserts this signal at a medium speed on nonconfiguration cycle accesses.
8	DATAPAR	RCU	Data parity error detected. Bit 8 is set to 1b when the following conditions have been met: a. $\overline{\text{PERR}}$ was asserted by any PCI device including the SD host controller. b. The SD host controller was the bus master during the data parity error. c. Bit 6 (PERR_EN) in the command register at offset 04h in the PCI configuration space (see Section 12.3) is set to 1b.
7	FBB_CAP	R	Fast back-to-back capable. The SD host controller cannot accept fast back-to-back transactions; therefore, bit 7 is hardwired to 0b.
6	UDF	R	User-definable features (UDF) supported. The SD host controller does not support the UDF; therefore, bit 6 is hardwired to 0b.
5	66MHZ	R	66-MHz capable. The SD host controller operates at a maximum PCLK frequency of 33 MHz; therefore, bit 5 is hardwired to 0b.
4	CAPLIST	R	Capabilities list. Bit 4 returns 1b when read, indicating that the SD host controller supports additional PCI capabilities.
3	INT_STATUS	RU	Interrupt status. This bit reflects the interrupt status of the function. Only when bit 10 (INT_DISABLE) in the command register (offset 04h, see Section 12.3) is a 0b and this bit is 1b, is the function's $\overline{\text{INTx}}$ signal asserted. Setting the INT_DISABLE bit to 1b has no effect on the state of this bit. This bit is set only when a valid interrupt condition exists. This bit is not set when an interrupt condition exists and signaling of that event is not enabled.
2−0	RSVD	R	Reserved. Bits 2−0 return 000b when read.

12.5 Class Code and Revision ID Register

The class code and revision ID register categorizes the base class, subclass, and programming interface of the function. The base class is 08h, identifying the controller as a generic system peripheral. The subclass is 05h, identifying the function as an SD host controller. The programming interface is 01h, indicating that the function is a standard SD host with DMA capabilities. Furthermore, the TI chip revision is indicated in the least significant byte (00h). See Table 12−4 for a complete description of the register contents.

Function 3 register offset: 08h
Register type: Read-only
Default value: 0805 0000h

BIT NUMBER	31	30	29	28	27	26	25	24	23	22	21	20	19	18	17	16
RESET STATE	0	0	0	0	1	0	0	0	0	0	0	0	0	1	0	1
BIT NUMBER	**15**	**14**	**13**	**12**	**11**	**10**	**9**	**8**	**7**	**6**	**5**	**4**	**3**	**2**	**1**	**0**
RESET STATE	0	0	0	0	0	0	0	0	0	0	0	0	0	0	0	0

Table 12−4. Class Code and Revision ID Register Description

BIT	FIELD NAME	TYPE	DESCRIPTION
31−24	BASECLASS	R	Base class. This field returns 08h when read, which broadly classifies the function as a generic system peripheral.
23−16	SUBCLASS	R	Subclass. This field returns 05h when read, which specifically classifies the function as an SD host controller.
15−8	PGMIF	R	Programming interface. If bit 0 (DMA_EN) in the general control register (offset 88h, see Section 12.22) is 0b, then this field returns 00h when read to indicate that the function is a standard SD host without DMA capabilities. If the DMA_EN bit is 1b, then this field returns 01h when read to indicate that the function is a standard SD host with DMA capabilities.
7−0	CHIPREV	R	Silicon revision. This field returns the silicon revision of the SD host controller.

12.6 Latency Timer and Class Cache Line Size Register

The latency timer and class cache line size register is programmed by host BIOS to indicate system cache line size and the latency timer associated with the SD host controller. See Table 12−5 for a complete description of the register contents.

Function 3 register offset: 0Ch
Register type: Read/Write
Default value: 0000h

BIT NUMBER	15	14	13	12	11	10	9	8	7	6	5	4	3	2	1	0
RESET STATE	0	0	0	0	0	0	0	0	0	0	0	0	0	0	0	0

Table 12−5. Latency Timer and Class Cache Line Size Register Description

BIT	FIELD NAME	TYPE	DESCRIPTION
15−8	LATENCY_TIMER	RW	PCI latency timer. The value in this register specifies the latency timer for the SD host controller, in units of PCI clock cycles. When the SD host controller is a PCI bus initiator and asserts $\overline{\text{FRAME}}$, the latency timer begins counting from zero. If the latency timer expires before the SD host transaction has terminated, then the SD host controller terminates the transaction when its $\overline{\text{GNT}}$ is deasserted.
7−0	CACHELINE_SZ	RW	Cache line size. This value is used by the SD host controller during memory write and invalidate, memory-read line, and memory-read multiple transactions.

12.7 Header Type and BIST Register

The header type and built-in self-test (BIST) register indicates the SD host controller PCI header type and no built-in self-test. See Table 12−6 for a complete description of the register contents.

Function 3 register offset: 0Eh
Register type: Read-only
Default value: 0080h

BIT NUMBER	15	14	13	12	11	10	9	8	7	6	5	4	3	2	1	0
RESET STATE	0	0	0	0	0	0	0	0	1	0	0	0	0	0	0	0

Table 12−6. Header Type and BIST Register Description

BIT	FIELD NAME	TYPE	DESCRIPTION
15−8	BIST	R	Built-in self-test. The SD host controller does not include a BIST; therefore, this field returns 00h when read.
7−0	HEADER_TYPE	R	PCI header type. The SD host controller includes the standard PCI header. Bit 7 indicates if the SD host is a multifunction device.

12.8 SD Host Base Address Register

The SD host base address register specifies the base address of the memory-mapped interface registers for each standard SD host socket. The size of the base address register (BAR) is 256 bytes. See Table 12−7 for a complete description of the register contents.

Function 3 register offset: 10h
Register type: Read/Write, Read-only
Default value: 0000 0000h

BIT NUMBER	31	30	29	28	27	26	25	24	23	22	21	20	19	18	17	16
RESET STATE	0	0	0	0	0	0	0	0	0	0	0	0	0	0	0	0
BIT NUMBER	**15**	**14**	**13**	**12**	**11**	**10**	**9**	**8**	**7**	**6**	**5**	**4**	**3**	**2**	**1**	**0**
RESET STATE	0	0	0	0	0	0	0	0	0	0	0	0	0	0	0	0

Table 12−7. SD Host Base Address Register Description

BIT	FIELD NAME	TYPE	DESCRIPTION
31−8	BAR	RW	Base address. This field specifies the upper 24 bits of the 32-bit starting base address. The size of the base address is 256 bytes.
7−4	RSVD	R	Reserved. Bits 7−4 return 0h when read.
3	PREFETCHABLE	R	Prefetchable indicator. This bit is hardwired to 0b to indicate that the memory space is not prefetchable.
2−1	TYPE	R	This field is hardwired to 00b to indicate that the base address is located in 32-bit address space.
0	MEM_INDICATOR	R	Memory space indicator. Bit 0 is hardwired to 0b to indicate that the base address maps into memory space.

12.9 Subsystem Vendor Identification Register

The subsystem identification register, used for system and option card identification purposes, may be required for certain operating systems. This read-only register is initialized through the EEPROM and can be written through the subsystem access register at PCI offset 8Ch (see Section 12.23). All bits in this register are reset by $\overline{\text{GRST}}$ only.

Function 3 register offset: 2Ch
Register type: Read/Update
Default value: 0000h

BIT NUMBER	15	14	13	12	11	10	9	8	7	6	5	4	3	2	1	0
RESET STATE	0	0	0	0	0	0	0	0	0	0	0	0	0	0	0	0

12.10 Subsystem Identification Register

The subsystem identification register, used for system and option card identification purposes, may be required for certain operating systems. This read-only register is initialized through the EEPROM and can be written through the subsystem access register at PCI offset 8Ch (see Section 12.23). All bits in this register are reset by $\overline{\text{GRST}}$ only.

Function 3 register offset: 2Eh
Register type: Read/Update
Default value: 0000h

BIT NUMBER	15	14	13	12	11	10	9	8	7	6	5	4	3	2	1	0
RESET STATE	0	0	0	0	0	0	0	0	0	0	0	0	0	0	0	0

12.11 Capabilities Pointer Register

The power-management capabilities pointer register provides a pointer into the PCI configuration header where the power-management register block resides. Since the PCI power-management registers begin at 80h, this read-only register is hardwired to 80h.

Function 3 register offset: 34h
Register type: Read-only
Default value: 80h

BIT NUMBER	7	6	5	4	3	2	1	0
RESET STATE	1	0	0	0	0	0	0	0

12.12 Interrupt Line Register

The interrupt line register is programmed by the system and indicates to the software which interrupt line the SD host controller has assigned to it. The default value of this register is FFh, indicating that an interrupt line has not yet been assigned to the function.

Function 3 register offset: 3Ch
Register type: Read/Write
Default value: FFh

BIT NUMBER	7	6	5	4	3	2	1	0
RESET STATE	1	1	1	1	1	1	1	1

12.13 Interrupt Pin Register

This register decodes the interrupt select inputs and returns the proper interrupt value based on Table 12−8, indicating that the SD host controller uses an interrupt. If one of the USE_INTx terminals is asserted, the interrupt select bits are ignored, and this register returns the interrupt value for the highest priority USE_INTx terminal that is asserted. If bit 28, the tie-all bit (TIEALL), in the system control register (PCI offset 80h, see Section 4.29) is set to 1b, then the controller asserts the USE_INTA input to the SD host controller core. If bit 28 (TIEALL) in the system control register (PCI offset 80h, see Section 4.29) is set to 0b, then none of the USE_INTx inputs are asserted and the interrupt for the SD host controller function is selected by the INT_SEL bits in the SD host general control register.

Function 3 register offset: 3Dh
Register type: Read-only
Default value: 0Xh

BIT NUMBER	7	6	5	4	3	2	1	0
RESET STATE	0	0	0	0	0	X	X	X

Table 12−8. PCI Interrupt Pin Register

INT_SEL BITS	USE_INTA	INTPIN
00	0	01h ($\overline{\text{INTA}}$)
01	0	02h ($\overline{\text{INTB}}$)
10	0	03h ($\overline{\text{INTC}}$)
11	0	04h ($\overline{\text{INTD}}$)
XX	1	01h ($\overline{\text{INTA}}$)

12.14 Minimum Grant Register

The minimum grant register contains the minimum grant value for the SD host controller core.

Function 3 register offset: 3Eh
Register type: Read/Update
Default value: 07h

BIT NUMBER	7	6	5	4	3	2	1	0
RESET STATE	0	0	0	0	0	1	1	1

Table 12−9. Minimum Grant Register Description

BIT	FIELD NAME	TYPE	DESCRIPTION
7−0	MIN_GNT	RU	Minimum grant. The contents of this field may be used by host BIOS to assign a latency timer register value to the SD host controller. The default for this register indicates that the SD host controller may need to sustain burst transfers for nearly 64 µs and thus request a large value be programmed in bits 15−8 of the latency timer and class cache line size register at offset 0Ch in the PCI configuration space (see Section 12.6).

12.15 Maximum Latency Register

The maximum latency register contains the maximum latency value for the SD host controller core.

Function 3 register offset: 3Fh
Register type: Read/Update
Default value: 04h

BIT NUMBER	7	6	5	4	3	2	1	0
RESET STATE	0	0	0	0	0	1	0	0

Table 12−10. Maximum Latency Register Description

BIT	FIELD NAME	TYPE	DESCRIPTION
7−0	MAX_LAT	RU	Maximum latency. The contents of this field may be used by host BIOS to assign an arbitration priority level to the SD host controller. The default for this register indicates that the SD host controller may need to access the PCI bus as often as every 0.25 µs; thus, an extremely high priority level is requested. The contents of this field may also be loaded through the serial EEPROM.

12.16 Slot Information Register

This read-only register contains information on the number of SD sockets implemented and the base address registers used. The controller only implements one SD socket.

Function 3 register offset: 40h
Register type: Read/Update
Default value: 00h

BIT NUMBER	7	6	5	4	3	2	1	0
RESET STATE	0	0	0	0	0	0	0	0

Table 12−11. Maximum Latency Register Description

BIT	FIELD NAME	TYPE	DESCRIPTION
7	RSVD	R	Reserved. This bit returns 0b when read.
6−4	NUMBER_SLOTS	R	Number of slots. This field indicates the number of SD sockets supported by the SD host controller. Since the controller supports one SD socket, this field returns 000b when read.
3	RSVD	R	Reserved. This bit returns 0b when read.
2−0	FIRST_BAR	R	First base address register number. This field is hardwired to 000b to indicate that the first BAR used for the SD host standard registers is BAR0.

12.17 Capability ID and Next Item Pointer Registers

The capability ID and next item pointer register identifies the linked-list capability item and provides a pointer to the next capability item. See Table 12−12 for a complete description of the register contents.

Function 3 register offset: 80h
Register type: Read-only
Default value: 0001h

BIT NUMBER	15	14	13	12	11	10	9	8	7	6	5	4	3	2	1	0
RESET STATE	0	0	0	0	0	0	0	0	0	0	0	0	0	0	0	1

Table 12−12. Capability ID and Next Item Pointer Registers Description

BIT	FIELD NAME	TYPE	DESCRIPTION
15−8	NEXT_ITEM	R	Next item pointer. The SD host controller supports only one additional capability, PCI power management, that is communicated to the system through the extended capabilities list; therefore, this field returns 00h when read.
7−0	CAPABILITY_ID	R	Capability identification. This field returns 01h when read, which is the unique ID assigned by the PCI SIG for PCI power-management capability.

12.18 Power-Management Capabilities Register

The power-management capabilities register indicates the capabilities of the SD host controller related to PCI power management. See Table 12−13 for a complete description of the register contents.

Function 3 register offset: 82h
Register type: Read/Update, Read-only
Default value: 7E02h

BIT NUMBER	15	14	13	12	11	10	9	8	7	6	5	4	3	2	1	0
RESET STATE	0	1	1	1	1	1	1	0	0	0	0	0	0	0	1	0

Table 12−13. Power-Management Capabilities Register Description

BIT	FIELD NAME	TYPE	DESCRIPTION
15	PME_D3COLD	RU	$\overline{PME}$ support from $D3_{cold}$. This bit can be set to 1b or cleared to 0b via bit 4 (D3_COLD) in the general control register at offset 88h in the PCI configuration space (see Section 12.22). When this bit is set to 1b, it indicates that the SD host controller is capable of generating a $\overline{PME}$ wake event from $D3_{cold}$. This bit state is dependent upon the SD host controller V_{AUX} implementation and may be configured by using bit 4 (D3_COLD) in the general control register (see Section 12.22).
14−11	PME_SUPPORT	R	$\overline{PME}$ support. This 4-bit field indicates the power states from which the SD host controller may assert $\overline{PME}$. This field returns a value of 1111b by default, indicating that $\overline{PME}$ may be asserted from the $D3_{hot}$, D2, D1, and D0 power states.
10	D2_SUPPORT	R	D2 support. Bit 10 is hardwired to 1b, indicating that the SD host controller supports the D2 power state.
9	D1_SUPPORT	R	D1 support. Bit 9 is hardwired to 1b, indicating that the SD host controller supports the D1 power state.
8−6	AUX_CURRENT	R	Auxiliary current. This 3-bit field reports the 3.3-V_{AUX} auxiliary current requirements. When bit 15 (PME_D3COLD) is cleared, this field returns 000b; otherwise, it returns 001b. 000b = Self-powered 001b = 55 mA (3.3-V_{AUX} maximum current required)
5	DSI	R	Device-specific initialization. This bit returns 0b when read, indicating that the SD host controller does not require special initialization beyond the standard PCI configuration header before a generic class driver is able to use it.
4	RSVD	R	Reserved. Bit 4 returns 0b when read.
3	PME_CLK	R	$\overline{PME}$ clock. This bit returns 0b when read, indicating that the PCI clock is not required for the SD host controller to generate $\overline{PME}$.
2−0	PM_VERSION	R	Power-management version. If bit 7 (PCI_PM_VERSION_CTRL) in the general control register (offset 88h, see Section 12.22) is 0b, this field returns 010b indicating *PCI Bus Power Management Interface Specification* (Revision 1.1) compatibility. If the PCI_PM_VERSION_CTRL bit is 1b, this field returns 011b indicating *PCI Bus Power Management Interface Specification* (Revision 1.2) compatibility.

12.19 Power-Management Control and Status Register

The power-management control and status register implements the control and status of the SD host controller. This register is not affected by the internally-generated reset caused by the transition from the $D3_{hot}$ to D0 state. See Table 12−14 for a complete description of the register contents.

Function 3 register offset: 84h
Register type: Read/Clear, Read/Write, Read-only
Default value: 0000h

BIT NUMBER	15	14	13	12	11	10	9	8	7	6	5	4	3	2	1	0
RESET STATE	0	0	0	0	0	0	0	0	0	0	0	0	0	0	0	0

Table 12−14. Power-Management Control and Status Register Description

BIT	FIELD NAME	TYPE	DESCRIPTION
15 ‡	PME_STAT	RCU	$\overline{PME}$ status. This bit defaults to 0b.
14−13	DATA_SCALE	R	Data scale. This field returns 00b when read, because the SD host controller does not use the data register.
12−9	DATA_SELECT	R	Data select. This field returns 0h when read, because the SD host controller does not use the data register.
8 ‡	PME_EN	RW	$\overline{PME}$ enable. Enables $\overline{PME}$ signaling.
7−2	RSVD	R	Reserved. Bits 7−2 return 000000b when read.
1−0 ‡	PWR_STATE	RW	Power state. This 2-bit field determines the current power state and sets the SD host controller to a new power state. This field is encoded as follows: 00 = Current power state is D0 01 = Current power state is D1 10 = Current power state is D2 11 = Current power state is $D3_{hot}$

‡ One or more bits in this register are cleared only by the assertion of $\overline{GRST}$.

12.20 Power-Management Bridge Support Extension Register

The power-management bridge support extension register provides extended power-management features not applicable to the SD host controller; thus, it is read-only and returns 00h when read.

Function 3 register offset: 86h
Register type: Read-only
Default value: 00h

BIT NUMBER	7	6	5	4	3	2	1	0
RESET STATE	0	0	0	0	0	0	0	0

12.21 Power-Management Data Register

The power-management bridge support extension register provides extended power-management features not applicable to the SD host controller; thus, it is read-only and returns 00h when read.

Function 3 register offset: 87h
Register type: Read-only
Default value: 00h

BIT NUMBER	7	6	5	4	3	2	1	0
RESET STATE	0	0	0	0	0	0	0	0

12.22 General Control Register

The general control register provides miscellaneous PCI-related configuration. See Table 12−15 for a complete description of the register contents.

Function 3 register offset: 88h
Register type: Read/Write, Read-only
Default value: 00h

BIT NUMBER	7	6	5	4	3	2	1	0
RESET STATE	0	0	0	0	0	0	0	0

Table 12−15. General Control Register

BIT	FIELD NAME	TYPE	DESCRIPTION
7 ‡	PCI_PM_ VERSION_CTRL	RW	PCI power-management version control. This bit controls the value reported in bits 2−0 (PM_VERSION) of the power-management capabilities register (offset 82h, see Section 12.18). 0 = PM_VERSION field reports 010b for *PCI Bus Power Management Interface Specification* (Revision 1.1) compatability. 1 = PM_VERSION field reports 011b for *PCI Bus Power Management Interface Specification* (Revision 1.2) compatability.
6−5 ‡	INT_SEL	RW	Interrupt select. These bits are program the INTPIN register and set which interrupt output is used. This field is ignored if one of the USE_INTx terminals is asserted. 00 = $\overline{\text{INTA}}$ 01 = $\overline{\text{INTB}}$ 10 = $\overline{\text{INTC}}$ 11 = $\overline{\text{INTD}}$
4 ‡	D3_COLD	RW	$D3_{cold}$ $\overline{\text{PME}}$ support. This bit sets and clears bit 15 (PME_D3COLD) in the power-management capabilities register (offset 82h, see Section 12.18).
3	CORE_RST_CTRL	RW	Core reset control. This bit controls the reset for the SD host controller core. This bit does not affect the reset of the PCI portion of the SD host core. 0 = The SD host controller core is reset by either $\overline{\text{GRST}}$ or $\overline{\text{PRST}}$ (default). 1 = The SD host controller core is only reset by $\overline{\text{GRST}}$.
2	RSVD	R	Reserved. Bit 2 returns 0b when read.
1	HS_EN	RW	High speed enable. This bit enables the high-speed SD functionality of the SD host controller core. When this bit is set, the HIGH_SPEED_SUPPORT bit in the capabilities register of each SD host socket is set. When this bit is 0, the HIGH_SPEED_SUPPORT bit of each SD host socket is 0.
0 ‡	DMA_EN	RW	DMA enable. This bit enables DMA functionality of the SD host controller core. When this bit is set, the PGMIF field in the class code register (offset 08h, see Section 12.5) returns 01h and the DMA_SUPPORT bit in the capabilities register of each SD host socket is set. When this bit is 0b, the PGMIF field returns 00h and the DMA_SUPPORT bit of each SD host socket is 0b.

‡ One or more bits in this register are cleared only by the assertion of $\overline{\text{GRST}}$.

12.23 Subsystem Access Register

The contents of the subsystem access register are aliased to the subsystem vendor ID and subsystem ID registers at PCI offsets 2Ch and 2Eh, respectively. See Table 12−16 for a complete description of the register contents. All bits in this register are reset by $\overline{\text{GRST}}$ only.

Function 3 register offset: 8Ch
Register type: Read/Write
Default value: 0000 0000h

BIT NUMBER	31	30	29	28	27	26	25	24	23	22	21	20	19	18	17	16
RESET STATE	0	0	0	0	0	0	0	0	0	0	0	0	0	0	0	0
BIT NUMBER	**15**	**14**	**13**	**12**	**11**	**10**	**9**	**8**	**7**	**6**	**5**	**4**	**3**	**2**	**1**	**0**
RESET STATE	0	0	0	0	0	0	0	0	0	0	0	0	0	0	0	0

Table 12−16. Subsystem Access Register Description

BIT	FIELD NAME	TYPE	DESCRIPTION
31−16	SubsystemID	RW	Subsystem device ID. The value written to this field is aliased to the subsystem ID register at PCI offset 2Eh.
15−0	SubsystemVendorID	RW	Subsystem vendor ID. The value written to this field is aliased to the subsystem vendor ID register at PCI offset 2Ch.

12.24 Diagnostic Register

This register enables the diagnostic modes. See Table 12−17 for a complete description of the register contents. All bits in this register are reset by $\overline{\text{GRST}}$ only.

Function 3 register offset: 90h
Register type: Read-only, Read/Write
Default value: 0000 0000h

BIT NUMBER	31	30	29	28	27	26	25	24	23	22	21	20	19	18	17	16
RESET STATE	0	0	0	0	0	0	0	0	0	0	0	0	0	0	0	0
BIT NUMBER	**15**	**14**	**13**	**12**	**11**	**10**	**9**	**8**	**7**	**6**	**5**	**4**	**3**	**2**	**1**	**0**
RESET STATE	0	0	0	0	0	0	0	0	0	0	0	0	0	0	0	0

Table 12−17. Diagnostic Register Description

BIT	SIGNAL	TYPE	FUNCTION
31−17	RSVD	R	Reserved. Bits 31−17 return 000 0000 0000 0000b when read.
16	DIAGNOSTIC	RW	Diagnostic test bit. This test bit shortens the card detect debounce times for simulation and TDL.
15−0	RSVD	R	Reserved. Bits 15−0 return 0000h when read.

12.25 Slot 0 3.3-V Maximum Current Register

This register is a read/write register and the contents of this register are aliased to the 3_3_MAX_CURRENT field in the slot 0 maximum current capabilities register at offset 48h in the SD host standard registers. This register is a $\overline{\text{GRST}}$ only register.

Function 3 register offset: 94h
Register type: Read/Write
Default value: 0000h

BIT NUMBER	7	6	5	4	3	2	1	0
RESET STATE	0	0	0	0	0	0	0	0

13 Smart Card Controller Programming Model

This section describes the internal PCI configuration registers used to program the PCI6612 and PCI7612 Smart Card controller interfaces. All registers are detailed in the same format: a brief description for each register is followed by the register offset and a bit table describing the reset state for each register.

A bit description table, typically included when the register contains bits of more than one type or purpose, indicates bit field names, a detailed field description, and field access tags which appear in the *type* column. Table 4−1 describes the field access tags.

The controller is a multifunction PCI device. The Smart Card controller core is integrated as PCI function 4. The function 4 configuration header is compliant with the *PCI Local Bus Specification* as a standard header. Table 13−1 illustrates the configuration header that includes both the predefined portion of the configuration space and the user-definable registers.

Table 13−1. Function 4 Configuration Register Map

REGISTER NAME				OFFSET
Device ID		Vendor ID		00h
Status		Command		04h
Class code			Revision ID	08h
BIST	Header type	Latency timer	Cache line size	0Ch
SC global control base address				10h
SC socket 0 base address				14h
SC socket 1 base address				18h
Reserved				1Ch−28h
Subsystem ID ‡		Subsystem vendor ID ‡		2Ch
Reserved				30h
Reserved			PCI power-management capabilities pointer	34h
Reserved				38h
Maximum latency	Minimum grant	Interrupt pin	Interrupt line	3Ch
Reserved				40h
Power-management capabilities		Next item pointer	Capability ID	44h
PM data (Reserved)	PMCSR_BSE	Power-management control and status ‡		48h
Reserved		General control ‡		4Ch
Subsystem alias				50h
Class code alias				54h
Smart Card configuration 1				58h
Smart Card configuration 2				5Ch
Reserved				60h−FCh

‡ One or more bits in this register are cleared only by the assertion of $\overline{\text{GRST}}$.

13.1 Vendor ID Register

The vendor ID register contains a value allocated by the PCI SIG and identifies the manufacturer of the PCI device. The vendor ID assigned to Texas Instruments is 104Ch.

Function 4 register offset: 00h
Register type: Read-only
Default value: 104Ch

BIT NUMBER	15	14	13	12	11	10	9	8	7	6	5	4	3	2	1	0
RESET STATE	0	0	0	1	0	0	0	0	0	1	0	0	1	1	0	0

13.2 Device ID Register

The device ID register contains a value assigned to the Smart Card controller by Texas Instruments. The device identification for the Smart Card controller is 803Dh.

Function 4 register offset: 02h
Register type: Read-only
Default value: 803Dh

BIT NUMBER	15	14	13	12	11	10	9	8	7	6	5	4	3	2	1	0
RESET STATE	1	0	0	0	0	0	0	0	0	0	1	1	1	1	0	1

13.3 Command Register

The command register provides control over the Smart Card controller interface to the PCI bus. All bit functions adhere to the definitions in the *PCI Local Bus Specification*, as seen in the following bit descriptions. The SERR_EN and PERR_EN enable bits in this register are internally wired-OR between other functions, and these control bits appear separately according to their software function. See Table 13−2 for a complete description of the register contents.

Function 4 register offset: 04h
Register type: Read/Write, Read-only
Default value: 0000h

BIT NUMBER	15	14	13	12	11	10	9	8	7	6	5	4	3	2	1	0
RESET STATE	0	0	0	0	0	0	0	0	0	0	0	0	0	0	0	0

Table 13−2. Command Register Description

BIT	FIELD NAME	TYPE	DESCRIPTION
15−11	RSVD	R	Reserved. Bits 15−11 return 00000b when read.
10	INT_DIS	RW	$\overline{\text{INTx}}$ disable. When set to 1b, this bit disables the function from asserting interrupts on the $\overline{\text{INTx}}$ signals. 0 = $\overline{\text{INTx}}$ assertion is enabled (default) 1 = $\overline{\text{INTx}}$ assertion is disabled
9	FBB_EN	R	Fast back-to-back enable. The Smart Card interface does not generate fast back-to-back transactions; therefore, bit 9 returns 0b when read.
8	SERR_EN	RW	System error ($\overline{\text{SERR}}$) enable. Bit 8 controls the enable for the $\overline{\text{SERR}}$ driver on the PCI interface. $\overline{\text{SERR}}$ can be asserted after detecting an address parity error on the PCI bus. Both bits 8 and 6 (PERR_EN) must be set for this function to report address parity errors. 0 = Disable $\overline{\text{SERR}}$ output driver (default) 1 = Enable $\overline{\text{SERR}}$ output driver
7	RSVD	R	Reserved. Bit 7 returns 0b when read.
6	PERR_EN	RW	Parity error response enable. Bit 6 controls this function response to parity errors through $\overline{\text{PERR}}$. Data parity errors are indicated by asserting $\overline{\text{PERR}}$, whereas address parity errors are indicated by asserting $\overline{\text{SERR}}$. 0 = This function ignores detected parity error (default) 1 = This function responds to detected parity errors
5	VGA_EN	R	VGA palette snoop enable. The Smart Card interface does not feature VGA palette snooping; therefore, bit 5 returns 0b when read.
4	MWI_EN	R	Memory write and invalidate enable. The Smart Card controller does not generate memory write invalidate transactions; therefore, bit 4 returns 0b when read.
3	SPECIAL	R	Special cycle enable. The Smart Card interface does not respond to special cycle transactions; therefore, bit 3 returns 0b when read.
2	MAST_EN	R	Bus master enable. This function is target only.
1	MEM_EN	RW	Memory space enable. This bit controls memory access. 0 = Disables this function from responding to memory space accesses (default) 1 = Enables this function to respond to memory space accesses
0	IO_EN	R	I/O space enable. The Smart Card interface does not implement any I/O-mapped functionality; therefore, bit 0 returns 0b when read.

13.4 Status Register

The status register provides device information to the host system. All bit functions adhere to the definitions in the *PCI Local Bus Specification*, as seen in the following bit descriptions. Bits in this register may be read normally. A bit in the status register is reset when 1b is written to that bit location; a 0b written to a bit location has no effect. See Table 13−3 for a complete description of the register contents.

Function 4 register offset: 06h
Register type: Read/Clear/Update, Read-only
Default value: 0210h

BIT NUMBER	15	14	13	12	11	10	9	8	7	6	5	4	3	2	1	0
RESET STATE	0	0	0	0	0	0	1	0	0	0	0	1	0	0	0	0

Table 13−3. Status Register Description

BIT	FIELD NAME	TYPE	DESCRIPTION
15	PAR_ERR	RCU	Detected parity error. Bit 15 is set to 1b when either an address parity or data parity error is detected.
14	SYS_ERR	RCU	Signaled system error. Bit 14 is set to 1b when $\overline{\text{SERR}}$ is enabled and the Smart Card controller has signaled a system error to the host.
13	MABORT	R	This function does not support bus mastering. This bit is hardwired to 0b.
12	TABT_REC	R	This function does not support bus mastering and never receives a target abort. This bit is hardwired to 0b.
11	TABT_SIG	RCU	Signaled target abort. Bit 11 is set to 1b by the Smart Card controller when it terminates a transaction on the PCI bus with a target abort.
10−9	PCI_SPEED	R	DEVSEL timing. Bits 10 and 9 encode the timing of $\overline{\text{DEVSEL}}$ and are hardwired to 01b, indicating that the Smart Card controller asserts this signal at a medium speed on nonconfiguration cycle accesses.
8	DATAPAR	R	This function does not support bus mastering. This bit is hardwired to 0b.
7	FBB_CAP	R	Fast back-to-back capable. The Smart Card controller cannot accept fast back-to-back transactions; therefore, bit 7 is hardwired to 0b.
6	RSVD	R	Reserved. Bit 6 returns 0b when read.
5	66MHZ	R	66-MHz capable. The Smart Card controller operates at a maximum PCLK frequency of 33 MHz; therefore, bit 5 is hardwired to 0b.
4	CAPLIST	R	Capabilities list. Bit 4 returns 1b when read, indicating that the Smart Card controller supports additional PCI capabilities. The linked list of PCI power-management capabilities is implemented in this function.
3	INT_STAT	RU	Interrupt status. This bit reflects the interrupt status of the function. Only when bit 10 (INT_DISABLE) in the command register (see Section 11.3) is 0b and this bit is 1b, is the function's $\overline{\text{INTx}}$ signal asserted. Setting the INT_DISABLE bit to 1b has no effect on the state of this bit. This bit is set only when a valid interrupt condition exists. This bit is not set when an interrupt condition exists and signaling of that event is not enabled.
2−0	RSVD	R	Reserved. Bits 2−0 return 000b when read.

13.5 Class Code and Revision ID Register

The class code and revision ID register categorizes the base class, subclass, and programming interface of the function. The base class is 07h, identifying the controller as a communication device. The subclass is 80h, identifying the function as other mass storage controller, and the programming interface is 00h. Furthermore, the TI chip revision is indicated in the least significant byte (00h). See Table 13−4 for a complete description of the register contents.

Function 4 register offset: 08h
Register type: Read-only
Default value: 0780 0000h

BIT NUMBER	31	30	29	28	27	26	25	24	23	22	21	20	19	18	17	16
RESET STATE	0	0	0	0	0	1	1	1	1	0	0	0	0	0	0	0
BIT NUMBER	**15**	**14**	**13**	**12**	**11**	**10**	**9**	**8**	**7**	**6**	**5**	**4**	**3**	**2**	**1**	**0**
RESET STATE	0	0	0	0	0	0	0	0	0	0	0	0	0	0	0	0

Table 13−4. Class Code and Revision ID Register Description

BIT	FIELD NAME	TYPE	DESCRIPTION
31−24	BASECLASS	R	Base class. This field returns 07h when read, which classifies the function as a communication device.
23−16	SUBCLASS	R	Subclass. This field returns 80h when read, which specifically classifies the function as other mass storage controller.
15−8	PGMIF	R	Programming interface. This field returns 00h when read.
7−0	CHIPREV	R	Silicon revision. This field returns 00h when read, which indicates the silicon revision of the Smart Card controller.

13.6 Latency Timer and Class Cache Line Size Register

The latency timer and class cache line size register is programmed by host BIOS to indicate system cache line size and the latency timer associated with the Smart Card controller. See Table 13−5 for a complete description of the register contents.

Function 4 register offset: 0Ch
Register type: Read/Write
Default value: 0000h

BIT NUMBER	15	14	13	12	11	10	9	8	7	6	5	4	3	2	1	0
RESET STATE	0	0	0	0	0	0	0	0	0	0	0	0	0	0	0	0

Table 13−5. Latency Timer and Class Cache Line Size Register Description

BIT	FIELD NAME	TYPE	DESCRIPTION
15−8	LATENCY_TIMER	RW	PCI latency timer. The value in this register specifies the latency timer for the Smart Card controller, in units of PCI clock cycles. When the Smart Card controller is a PCI bus initiator and asserts $\overline{\text{FRAME}}$, the latency timer begins counting from zero. If the latency timer expires before the Smart Card transaction has terminated, then the Smart Card controller terminates the transaction when its $\overline{\text{GNT}}$ is deasserted.
7−0	CACHELINE_SZ	RW	Cache line size. This value is used by the Smart Card controller during memory write and invalidate, memory-read line, and memory-read multiple transactions.

13.7 Header Type and BIST Register

The header type and built-in self-test (BIST) register indicates the Smart Card controller PCI header type and no built-in self-test. See Table 13−6 for a complete description of the register contents.

Function 4 register offset: 0Eh
Register type: Read-only
Default value: 0080h

BIT NUMBER	15	14	13	12	11	10	9	8	7	6	5	4	3	2	1	0
RESET STATE	0	0	0	0	0	0	0	0	1	0	0	0	0	0	0	0

Table 13−6. Header Type and BIST Register Description

BIT	FIELD NAME	TYPE	DESCRIPTION
15−8	BIST	R	Built-in self-test. The Smart Card controller does not include a BIST; therefore, this field returns 00h when read.
7−0	HEADER_TYPE	R	PCI header type. The Smart Card controller includes the standard PCI header. Bit 7 indicates if the Smart Card is a multifunction device.

13.8 Smart Card Base Address Register 0

This register is used by this function to determine where to forward a memory transaction to the Smart Card global control register set. Bits 31−12 of this register are read/write and allow the base address to be located anywhere in the 32-bit PCI memory space on 4-Kbyte boundary. The window size is always 4K bytes. Bits 11−0 are read-only and always return 000h. Write transactions to these bits have no effect. Bit 3 (0b) specifies that this window is nonprefetchable. Bits 2−1 (00b) specify that this memory window can allocate anywhere in the 32-bit address space.

Function 4 register offset: 10h
Register type: Read/Write, Read-only
Default value: 0000 0000h

BIT NUMBER	31	30	29	28	27	26	25	24	23	22	21	20	19	18	17	16
RESET STATE	0	0	0	0	0	0	0	0	0	0	0	0	0	0	0	0
BIT NUMBER	**15**	**14**	**13**	**12**	**11**	**10**	**9**	**8**	**7**	**6**	**5**	**4**	**3**	**2**	**1**	**0**
RESET STATE	0	0	0	0	0	0	0	0	0	0	0	0	0	0	0	0

13.9 Smart Card Base Address Register 1

Each socket has its own base address register. For example, a device supports three Smart Card sockets uses three base address registers, BA1 (socket 0), BA2 (socket 1) and BA3 (socket 2). The PCIxx12 controller supports one Smart Card socket.

This register is used by this function to determine where to forward a memory transaction to the Smart Card control and communication register sets. Bits 31−12 of this register are read/write and allow the base address to be located anywhere in the 32-bit PCI memory space on 4-Kbyte boundaries and the window size is always 4K bytes. Bits 11−4 are read-only and always return 00h. Write transactions to these bits have no effect. Bit 3 (0b) specifies that these windows are nonprefetchable. Bits 2−1 (00b) specify that this memory window can allocate anywhere in the 32-bit address space.

Function 4 register offset: 14h
Register type: Read/Write, Read-only
Default value: 0000 0000h

BIT NUMBER	31	30	29	28	27	26	25	24	23	22	21	20	19	18	17	16
RESET STATE	0	0	0	0	0	0	0	0	0	0	0	0	0	0	0	0
BIT NUMBER	**15**	**14**	**13**	**12**	**11**	**10**	**9**	**8**	**7**	**6**	**5**	**4**	**3**	**2**	**1**	**0**
RESET STATE	0	0	0	0	0	0	0	0	0	0	0	0	0	0	0	0

13.10 Subsystem Vendor Identification Register

This register is read-update and can be modified through the subsystem vendor ID alias register. Default value is 104Ch. This default value complies with the WLP (Windows Logo Program) requirements without BIOS or EEPROM configuration. All bits in this register are reset by $\overline{\text{GRST}}$ only.

Function 4 register offset: 2Ch
Register type: Read/Update
Default value: 104Ch

BIT NUMBER	15	14	13	12	11	10	9	8	7	6	5	4	3	2	1	0
RESET STATE	0	0	0	1	0	0	0	0	0	1	0	0	1	1	0	0

13.11 Subsystem Identification Register

This register is read-update and can be modified through the subsystem ID alias register. This register has no effect to the functionality. Default value is 8035h. This default value complies with the WLP (Windows Logo Program) requirements without BIOS or EEPROM configuration. All bits in this register are reset by $\overline{\text{GRST}}$ only.

Function 4 register offset: 2Eh
Register type: Read/Update
Default value: 8035h

BIT NUMBER	15	14	13	12	11	10	9	8	7	6	5	4	3	2	1	0
RESET STATE	1	0	0	0	0	0	0	0	0	0	1	1	0	1	0	1

13.12 Capabilities Pointer Register

The power-management capabilities pointer register provides a pointer into the PCI configuration header where the power-management register block resides. Since the PCI power-management registers begin at 44h, this read-only register is hardwired to 44h.

Function 4 register offset: 34h
Register type: Read-only
Default value: 44h

BIT NUMBER	7	6	5	4	3	2	1	0
RESET STATE	0	1	0	0	0	1	0	0

13.13 Interrupt Line Register

The interrupt line register is programmed by the system and indicates to the software which interrupt line the Smart Card interface has assigned to it. The default value of this register is FFh, indicating that an interrupt line has not yet been assigned to the function.

Function 4 register offset: 3Ch
Register type: Read/Write
Default value: FFh

BIT NUMBER	7	6	5	4	3	2	1	0
RESET STATE	1	1	1	1	1	1	1	1

13.14 Interrupt Pin Register

This register decodes the interrupt select inputs and returns the proper interrupt value based on Table 13−7, indicating that the Smart Card interface uses an interrupt. If one of the USE_INTx terminals is asserted, the interrupt select bits are ignored, and this register returns the interrupt value for the highest priority USE_INTx terminal that is asserted. If bit 28, the tie-all bit (TIEALL), in the system control register (PCI offset 80h, see Section 4.29) is set to 1b, then the controller asserts the USE_INTA input to the Smart Card controller core. If bit 28 (TIEALL) in the system control register (PCI offset 80h, see Section 4.29) is set to 0b, then none of the USE_INTx inputs are asserted and the interrupt for the Smart Card function is selected by the INT_SEL bits in the Smart Card general control register.

Function 4 register offset: 3Dh
Register type: Read-only
Default value: 0Xh

BIT NUMBER	7	6	5	4	3	2	1	0
RESET STATE	0	0	0	0	0	X	X	X

Table 13−7. PCI Interrupt Pin Register

INT_SEL BITS	USE_INTA	INTPIN
00	0	01h ($\overline{\text{INTA}}$)
01	0	02h ($\overline{\text{INTB}}$)
10	0	03h ($\overline{\text{INTC}}$)
11	0	04h ($\overline{\text{INTD}}$)
XX	1	01h ($\overline{\text{INTA}}$)

13.15 Minimum Grant Register

The minimum grant register contains the minimum grant value for the Smart Card controller core.

Function 4 register offset: 3Eh
Register type: Read/Update
Default value: 00h

BIT NUMBER	7	6	5	4	3	2	1	0
RESET STATE	0	0	0	0	0	0	0	0

Table 13−8. Minimum Grant Register Description

BIT	FIELD NAME	TYPE	DESCRIPTION
7−0	MIN_GNT	RU	Minimum grant. The contents of this field may be used by host BIOS to assign a latency timer register value to the Smart Card controller. The default for this register indicates that the Smart Card controller may need to sustain burst transfers for nearly 64 µs and thus request a large value be programmed in bits 15−8 of the latency timer and class cache line size register at offset 0Ch in the PCI configuration space (see Section 13.6).

13.16 Maximum Latency Register

The maximum latency register contains the maximum latency value for the Smart Card controller core.

Function 4 register offset: 3Fh
Register type: Read/Update
Default value: 00h

BIT NUMBER	7	6	5	4	3	2	1	0
RESET STATE	0	0	0	0	0	0	0	0

Table 13−9. Maximum Latency Register Description

BIT	FIELD NAME	TYPE	DESCRIPTION
7−0	MAX_LAT	RU	Maximum latency. The contents of this field may be used by host BIOS to assign an arbitration priority level to the Smart Card controller. The default for this register indicates that the Smart Card controller may need to access the PCI bus as often as every 0.25 µs; thus, an extremely high priority level is requested. The contents of this field may also be loaded through the serial EEPROM.

13.17 Capability ID and Next Item Pointer Registers

The capability ID and next item pointer register identifies the linked-list capability item and provides a pointer to the next capability item. See Table 13−10 for a complete description of the register contents.

Function 4 register offset: 44h
Register type: Read-only
Default value: 0001h

BIT NUMBER	15	14	13	12	11	10	9	8	7	6	5	4	3	2	1	0
RESET STATE	0	0	0	0	0	0	0	0	0	0	0	0	0	0	0	1

Table 13−10. Capability ID and Next Item Pointer Registers Description

BIT	FIELD NAME	TYPE	DESCRIPTION
15−8	NEXT_ITEM	R	Next item pointer. The Smart Card controller supports only one additional capability, PCI power management, that is communicated to the system through the extended capabilities list; therefore, this field returns 00h when read.
7−0	CAPABILITY_ID	R	Capability identification. This field returns 01h when read, which is the unique ID assigned by the PCI SIG for PCI power-management capability.

13.18 Power-Management Capabilities Register

The power-management capabilities register indicates the capabilities of the Smart Card controller related to PCI power management. See Table 13−11 for a complete description of the register contents.

Function 4 register offset: 46h
Register type: Read/Update, Read-only
Default value: 7E02h

BIT NUMBER	15	14	13	12	11	10	9	8	7	6	5	4	3	2	1	0
RESET STATE	0	1	1	1	1	1	1	0	0	0	0	0	0	0	1	0

Table 13−11. Power-Management Capabilities Register Description

BIT	FIELD NAME	TYPE	DESCRIPTION
15	PME_D3COLD	RU	$\overline{\text{PME}}$ support from $D3_{cold}$. This bit can be set to 1b or cleared to 0b via bit 4 (D3_COLD) in the general control register at offset 4Ch in the PCI configuration space (see Section 13.22). When this bit is set to 1b, it indicates that the controller is capable of generating a $\overline{\text{PME}}$ wake event from $D3_{cold}$. This bit state is dependent upon the V_{AUX} implementation and may be configured by using bit 4 (D3_COLD) in the general control register (see Section 13.22).
14	PME_D3HOT	R	$\overline{\text{PME}}$ support. This 4-bit field indicates the power states from which the Smart Card interface may assert $\overline{\text{PME}}$. This field returns a value of 1111b by default, indicating that $\overline{\text{PME}}$ may be asserted from the $D3_{hot}$, D2, D1, and D0 power states.
13	PME_D2	R	
12	PME_D1	R	
11	PME_D0	R	
10	D2_SUPPORT	R	D2 support. Bit 10 is hardwired to 1b, indicating that the Smart Card controller supports the D2 power state.
9	D1_SUPPORT	R	D1 support. Bit 9 is hardwired to 1b, indicating that the Smart Card controller supports the D1 power state.
8−6	AUX_CURRENT	R	Auxiliary current. This 3-bit field reports the 3.3-V_{AUX} auxiliary current requirements. When bit 15 (PME_D3COLD) is cleared, this field returns 000b; otherwise, it returns 001b. 000b = Self-powered 001b = 55 mA (3.3-V_{AUX} maximum current required)
5	DSI	R	Device-specific initialization. This function requires device-specific initialization.
4	RSVD	R	Reserved. Bit 4 returns 0b when read.
3	PME_CLK	R	$\overline{\text{PME}}$ clock. This bit returns 0b when read, indicating that the PCI clock is not required for the Smart Card controller to generate $\overline{\text{PME}}$.
2−0	PM_VERSION	R	Power-management version. If bit 7 (PCI_PM_VERSION_CTRL) in the general control register (offset 4Ch, see Section 13.22) is 0b, this field returns 010b indicating *PCI Bus Power Management Interface Specification* (Revision 1.1) compatibility. If the PCI_PM_VERSION_CTRL bit is 1b, this field returns 011b indicating *PCI Bus Power Management Interface Specification* (Revision 1.2) compatibility.

13.19 Power-Management Control and Status Register

The power-management control and status register implements the control and status of the Smart Card controller. This register is not affected by the internally-generated reset caused by the transition from the $D3_{hot}$ to D0 state. See Table 13−12 for a complete description of the register contents.

Function 4 register offset: 48h
Register type: Read/Clear/Update, Read/Write, Read-only
Default value: 0000h

BIT NUMBER	15	14	13	12	11	10	9	8	7	6	5	4	3	2	1	0
RESET STATE	0	0	0	0	0	0	0	0	0	0	0	0	0	0	0	0

Table 13−12. Power-Management Control and Status Register Description

BIT	FIELD NAME	TYPE	DESCRIPTION
15 ‡	PME_STAT	RCU	$\overline{\text{PME}}$ status. This bit is set when the function would normally assert the $\overline{\text{PME}}$ signal independent of the state of PME_EN bit. Writing a 1b to this bit clears it and causes the function to stop asserting a $\overline{\text{PME}}$ (if enabled). Writing a 0b has no effect. This bit is initialized by $\overline{\text{GRST}}$ only when the PME_D3cold bit is 1b.
14−9	RSVD	R	Reserved. Bits 14−9 return 00 0000b when read.
8 ‡	PME_EN	RW	$\overline{\text{PME}}$ enable. This bit is initialized by $\overline{\text{GRST}}$ only when PME_D3cold bit is 1b.
7−2	RSVD	R	Reserved. Bits 7−2 return 00 0000b when read.
1−0 ‡	DSTATE	RW	Device state: This bit field controls device power-management state. Invalid state assignments are ignored. (ex. Current state 10b → writing 01b. This is rejected and stays 10b. See the latest *PCI Local Bus Specification*.) This bit field is initialized by GRST only when PME_D3cold bit is 1b.

‡ One or more bits in this register are cleared only by the assertion of $\overline{\text{GRST}}$.

13.20 Power-Management Bridge Support Extension Register

The power-management bridge support extension register provides extended power-management features not applicable to the Smart Card controller; thus, it is read-only and returns 00h when read.

Function 4 register offset: 4Ah
Register type: Read-only
Default value: 00h

BIT NUMBER	7	6	5	4	3	2	1	0
RESET STATE	0	0	0	0	0	0	0	0

13.21 Power-Management Data Register

The power-management bridge support extension register provides extended power-management features not applicable to the Smart Card controller; thus, it is read-only and returns 0 when read.

Function 4 register offset: 4Bh
Register type: Read-only
Default value: 00h

BIT NUMBER	7	6	5	4	3	2	1	0
RESET STATE	0	0	0	0	0	0	0	0

13.22 General Control Register

This register controls this function. Information of this register can be read from the socket configuration register in the Smart Card socket control register set. See Table 13−13 for a complete description of the register contents.

Function 4 register offset: 4Ch
Register type: Read/Write (EEPROM, $\overline{\text{GRST}}$ only)
Default value: 0000h

BIT NUMBER	15	14	13	12	11	10	9	8	7	6	5	4	3	2	1	0
RESET STATE	0	0	0	0	0	0	0	0	0	0	0	0	0	0	0	0

Table 13−13. General Control Register

BIT	FIELD NAME	TYPE	DESCRIPTION
15−8	RSVD	R	Reserved. Bits 15−8 return 00h when read.
7 ‡	PCI_PM_ VERSION_CTRL	RW	PCI power-management version control. This bit controls the value reported in bits 2−0 (PM_VERSION) of the power-management capabilities register (offset 46h, see Section 13.18). 0 = PM_VERSION field reports 010b for *PCI Bus Power Management Interface Specification* (Revision 1.1) compatability 1 = PM_VERSION field reports 011b for *PCI Bus Power Management Interface Specification* (Revision 1.2) compatability
6−5 ‡	INT_SEL	RW	Interrupt select. These bits are program the INTPIN register and set which interrupt output is used. This field is ignored if one of the USE_INTx terminals is asserted. 00 = $\overline{\text{INTA}}$ (pin = 1) 01 = $\overline{\text{INTB}}$ (pin = 2) 10 = $\overline{\text{INTC}}$ (pin = 3) 11 = $\overline{\text{INTD}}$ (pin = 4)
4 ‡	D3_COLD	RW	Disable function. Setting this bit to 1b hides this function. PCI configuration register of this function must be accessible at any time. Clock (PCI and 48 MHz) to the rest of the function blocks must be gated to reduce power consumption.
3−0	RSVD	R	Reserved. Bits 3−0 return 0h when read.

‡ One or more bits in this register are cleared only by the assertion of $\overline{\text{GRST}}$.

13.23 Subsystem ID Alias Register

The contents of the subsystem access register are aliased to the subsystem vendor ID and subsystem ID registers at PCI offsets 2Ch and 2Eh, respectively. See Table 13−14 for a complete description of the register contents. All bits in this register are reset by $\overline{\text{GRST}}$ only.

Function 4 register offset: 50h
Register type: Read/Write (EEPROM, $\overline{\text{GRST}}$ only)
Default value: 8035 104Ch

BIT NUMBER	31	30	29	28	27	26	25	24	23	22	21	20	19	18	17	16
RESET STATE	1	0	0	0	0	0	0	0	0	0	1	1	0	1	0	1
BIT NUMBER	**15**	**14**	**13**	**12**	**11**	**10**	**9**	**8**	**7**	**6**	**5**	**4**	**3**	**2**	**1**	**0**
RESET STATE	0	0	0	1	0	0	0	0	0	1	0	0	1	1	0	0

Table 13−14. Subsystem ID Alias Register Description

BIT	FIELD NAME	TYPE	DESCRIPTION
31−16	SubsystemID	RW	Subsystem device ID. The value written to this field is aliased to the subsystem ID register at PCI offset 2Eh.
15−0	SubsystemVendorID	RW	Subsystem vendor ID. The value written to this field is aliased to the subsystem vendor ID register at PCI offset 2Ch.

13.24 Class Code Alias Register

This register is alias of the class code. Not like original register, this register is read/write and loadable from EEPROM.

Function 4 register offset: 54h
Register type: Read-only, Read/Write (EEPROM, $\overline{\text{GRST}}$ only)
Default value: 0780 0000h

BIT NUMBER	31	30	29	28	27	26	25	24	23	22	21	20	19	18	17	16
RESET STATE	0	0	0	0	0	1	1	1	1	0	0	0	0	0	0	0
BIT NUMBER	**15**	**14**	**13**	**12**	**11**	**10**	**9**	**8**	**7**	**6**	**5**	**4**	**3**	**2**	**1**	**0**
RESET STATE	0	0	0	0	0	0	0	0	0	0	0	0	0	0	0	0

13.25 Smart Card Configuration 1 Register

BIOS or EEPROM configure system dependent Smart Card interface information through this register. Information of this register can be read from the Smart Card configuration 1 alias register in the Smart Card global control register set. The software utilizes this information and adjusts the software and firmware behavior if necessary. Corresponding bits are tied to 0b if the socket is not implemented.

Class A and B support are depend on the system and integrated device. Supporting both classes requires method (pins) to control 5.0 V and 3.0 V.

See Table 13−15 for a complete description of the register contents. All bits in this register are reset by $\overline{\text{GRST}}$ only.

Function 4 register offset: 58h
Register type: Read/Write, Read-only (EEPROM, $\overline{\text{GRST}}$ only)
Default value: 0110 1101h

BIT NUMBER	31	30	29	28	27	26	25	24	23	22	21	20	19	18	17	16
RESET STATE	0	0	0	0	0	0	0	1	0	0	0	1	0	0	0	1
BIT NUMBER	**15**	**14**	**13**	**12**	**11**	**10**	**9**	**8**	**7**	**6**	**5**	**4**	**3**	**2**	**1**	**0**
RESET STATE	0	0	0	1	0	0	0	1	0	0	0	0	0	0	0	1

Table 13−15. Smart Card Configuration 1 Register Description

BIT	FIELD NAME	TYPE	DESCRIPTION
31−28	SCRTCH_PAD	RW	Scratch pad
27−25	RSVD	R	Reserved. These bits return 000b when read.
24	CLASS_B_SKT0	RW	Socket 0 Class B Smart Card support. When this bit is set to 1b, socket 0 supports Class B Smart Cards.
23−21	RSVD	R	Reserved. These bits return 000b when read.
20	CLASS_A_SKT0	RW	Socket 0 Class A Smart Card support. When this bit is set to 1b, socket 0 supports Class A Smart Cards.
19−17	RSVD	R	Reserved. These bits return 000b when read.
16	EMVIF_EN_SKT0	RW	Socket 0 EMV interface enable. When this bit is set to 1b, the internal EVM interface for socket 0 is enabled.
15−13	RSVD	R	Reserved. These bits return 000b when read.
12	GPIO_EN_SKT0	RW	Socket 0 GPIO enable. When this bit is set to 1b, the SC_GPIOs for socket 0 are enabled.
11−9	RSVD	R	Reserved. These bits return 000b when read.
8	PCMCIA_MODE_SKT0	R/W	Socket 0 PCMCIA mode. If the SC_SOCKET_SEL bit is 0, this bit must be programmed to 0. If the SC_SOCKET_SEL bit is 1, this bit must be programmed to 1.
7−5	RSVD	R	Reserved. These bits return 000b when read.
4	PME_SUPPORT_SKT0	RW	Socket 0 PME support. When this bit is set to 1b, socket 0 card insertions cause a PME event.
3−1	RSVD	R	Reserved. These bits return 000b when read.
0	SKT0_EN	RW	Socket 0 enable. When this bit is set to 1b, socket 0 is enabled.

13.26 Smart Card Configuration 2 Register

BIOS or EEPROM configure system dependent Smart Card interface information through this register. Information of this register can be read from the Smart Card configuration 2 alias in the Smart Card global control register set. The software utilizes this information and adjusts the software and firmware behavior, if necessary.

See Table 13−16 for a complete description of the register contents. All bits in this register are reset by $\overline{\text{GRST}}$ only.

Function 4 register offset: 54h
Register type: Read-only, Read/Write (EEPROM, $\overline{\text{GRST}}$ only)
Default value: 0000 0000h

BIT NUMBER	31	30	29	28	27	26	25	24	23	22	21	20	19	18	17	16
RESET STATE	0	0	0	0	0	0	0	0	0	0	0	0	0	0	0	0
BIT NUMBER	**15**	**14**	**13**	**12**	**11**	**10**	**9**	**8**	**7**	**6**	**5**	**4**	**3**	**2**	**1**	**0**
RESET STATE	0	0	0	0	0	0	0	0	0	0	0	0	0	0	0	0

Table 13−16. Smart Card Configuration 2 Register Description

BIT	SIGNAL	TYPE	FUNCTION
31−16	RSVD	R	Reserved. Bits 31−16 return 0000h when read.
15−8	PWRUP_DELAY_PCMCIA	R	Power up delay for the PCMCIA socket. This register indicates how long the external power switch takes to apply stable power to the PCMCIA socket in ms. Software must wait before starting operation after power up. This field has no effect for the hardware.
7−0	RSVD	R	Reserved. Bits 7−0 return 00h when read.

14 Electrical Characteristics

14.1 Absolute Maximum Ratings Over Operating Temperature Ranges†

Supply voltage range, VR_PORT . . . . . −0.2 V to 2.2 V
AV_{DD_33} . . . . . −0.3 V to 4 V
V_{CC} . . . . . −0.3 V to 4 V
VDDPLL_15 . . . . . −0.5 V to 1.836 V
VDDPLL_33 . . . . . −0.3 V to 4 V
V_{CCCB} . . . . . −0.5 V to 5.5 V
V_{CCP} . . . . . −0.5 V to 5.5 V
SC_VCC_5V . . . . . −0.5 V to 5.5 V
Clamping voltage range, V_{CCP} and V_{CCCB} . . . . . −0.5 V to 6 V
Input voltage range, V_I: PCI, CardBus, PHY, SC, miscellaneous . . . . . −0.5 V to V_{CC} + 0.5 V
Output voltage range, V_O: PCI, CardBus, PHY, SC, miscellaneous . . . . . −0.5 V to V_{CC} + 0.5 V
Input clamp current, I_{IK} ($V_I < 0$ or $V_I > V_{CC}$) (see Note 3) . . . . . ±20 mA
Output clamp current, I_{OK} ($V_O < 0$ or $V_O > V_{CC}$) (see Note 4) . . . . . ±20 mA
Human Body Model (HBM) ESD performance . . . . . 1500 V
Operating free-air temperature, T_A . . . . . 0°C to 70°C
Storage temperature range, T_{stg} . . . . . −65°C to 150°C
Virtual junction temperature, T_J . . . . . 150°C

† Stresses beyond those listed under absolute maximum ratings may cause permanent damage to the device. These are stress ratings only and functional operation of the device at these or any other conditions beyond those indicated under recommended operating conditions is not implied. Exposure to absolute-maximum-rated conditions for extended periods may affect device reliability.

NOTES: 3. Applies for external input and bidirectional buffers. $V_I > V_{CC}$ does not apply to fail-safe terminals. PCI terminals and miscellaneous terminals are measured with respect to V_{CCP} instead of V_{CC}. PC Card terminals are measured with respect to CardBus V_{CC}. The limit specified applies for a dc condition.

4. Applies for external output and bidirectional buffers. $V_O > V_{CC}$ does not apply to fail-safe terminals. PCI terminals and miscellaneous terminals are measured with respect to V_{CCP} instead of V_{CC}. PC Card terminals are measured with respect to CardBus V_{CC}. The limit specified applies for a dc condition.

14.2 Recommended Operating Conditions (see Note 5)

		OPERATION	MIN	NOM	MAX	UNIT
VR_PORT	(see Table 2−6 for description)	1.5 V	1.35	1.5	1.65	V
AV_{DD_33}		3.3 V	3	3.3	3.6	V
V_{CC}		3.3 V	3	3.3	3.6	V
VDDPLL_15		1.5 V	1.35	1.5	1.65	V
VDDPLL_33		3.3 V	3	3.3	3.6	V
V_{CCP}	PCI and miscellaneous I/O clamp voltage	3.3 V	3	3.3	3.6	V
		5 V	4.75	5	5.25	
V_{CCCB}	PC Card I/O clamp voltage	3.3 V	3	3.3	3.6	V
		5 V	4.75	5	5.25	
SC_VCC_5V		5 V	4.75	5	5.25	V

NOTE 5: Unused terminals (input or I/O) must be held high or low to prevent them from floating.

Recommended Operating Conditions (continued)

			OPERATION	MIN	NOM	MAX	UNIT
V_{IH}†	High-level input voltage	PCI☆	3.3 V	0.5 V_{CCP}		V_{CCP}	V
			5 V	2		V_{CCP}	
		PC Card	3.3 V CardBus	0.475 V_{CCCB}		V_{CCCB}	
			3.3 V 16-bit	2		V_{CCCB}	
			5 V 16-bit	2.4		V_{CCCB}	
		Miscellaneous‡		2		V_{CC}	
		SC_DATA, SC_FCB, SC_RFU		0.6 SC_VCC_5V		SC_VCC_5V	
V_{IL}†	Low-level input voltage	PCI☆	3.3 V	0		0.3 V_{CCP}	V
			5 V	0		0.8	
		PC Card	3.3 V CardBus	0		0.325 V_{CCCB}	
			3.3 V 16-bit	0		0.8	
			5 V 16-bit	0		0.8	
		Miscellaneous‡		0		0.8	
		SC_DATA, SC_FCB, SC_RFU		0		0.5	
V_I	Input voltage	PCI☆		0		V_{CCP}	V
		PC Card		0		V_{CCCB}	
		Miscellaneous‡		0		V_{CC}	
		SC_DATA, SC_FCB, SC_RFU		0		SC_VCC_5V	
V_O§	Output voltage	PCI☆		0		V_{CC}	V
		PC Card		0		V_{CC}	
		Miscellaneous‡		0		V_{CC}	
		SC_CLK, SC_DATA, SC_FCB, SC_RFU, SC_RST		0		SC_VCC_5V	
t_t	Input transition time (t_r and t_f)	PCI and PC Card		1		4	ns
		Miscellaneous‡		0		6	
		SC_DATA, SC_FCB, SC_RFU		0		1200	
I_O	Output current	TPBIAS outputs		−5.6		1.3	mA
V_{ID}	Differential input voltage	Cable inputs during data reception		118		260	mV
		Cable inputs during arbitration		168		265	
V_{IC}	Common-mode input voltage	TPB cable inputs, source power node		0.4706		2.515	V
		TPB cable inputs, nonsource power node		0.4706		2.015¶	
t_{PU}	Powerup reset time	$\overline{GRST}$ input		2			ms
	Receive input jitter	TPA, TPB cable inputs	S100 operation			±1.08	ns
			S200 operation			±0.5	
			S400 operation			±0.315	
	Receive input skew	Between TPA and TPB cable inputs	S100 operation			±0.8	ns
			S200 operation			±0.55	
			S400 operation			±0.5	
T_A	Operating ambient temperature range			0	25	70	°C
T_J#	Virtual junction temperature			0	25	115	°C

† Applies to external inputs and bidirectional buffers without hysteresis

‡ Miscellaneous terminals are A03, A04, A05, A06, A07, A08, A09, A13, B04, B05, B06, B07, B08, B09, B11, B16, C04, C05, C06, C07, C08, C09, E06, E07, E08, E09, E10, F01, F02, F03, F08, G02, G03, G05, H03, J05, K05, N15, P12, P17 ($\overline{CCDx}$, $\overline{CDx}$, CLOCK, CLK_48, CVSx, DATA, $\overline{GRST}$, LATCH, MC_PWR_CTRL_0, MC_PWR_CTRL_1, MS_BS, $\overline{MS_CD}$, MS_CLK, MS_DATA2, MS_DATA3, MS_SDIO, PHY_TEST_MA, RSVD/VD0, $\overline{SC_CD}$, SCL, SC_OC, SC_PWR_CTRL, SDA, $\overline{SD_CD}$, $\overline{SD_CLK}$, $\overline{SD_CMD}$, SD_DAT0, SD_DAT1, SD_DAT2, SD_DAT3, SD_WP, $\overline{SM_CD}$, SM_CLE, SPKROUT, $\overline{SUSPEND}$, TEST0, $\overline{USB_EN}$, $\overline{VSx}$, and $\overline{XD_CD}$ terminals).

§ Applies to external output buffers

¶ For a node that does not source power, see Section 4.2.2.2 in IEEE Std 1394a−2000.

These junction temperatures reflect simulation conditions. The customer is responsible for verifying junction temperature.

☆MFUNC(0:6) share the same specifications as the PCI terminals.

14.3 Electrical Characteristics Over Recommended Operating Conditions (unless otherwise noted)

PARAMETER		TERMINALS	OPERATION	TEST CONDITIONS	MIN	MAX	UNIT
V_{OH}	High-level output voltage	PCI	3.3 V	I_{OH} = −0.5 mA	0.9 V_{CC}		V
			5 V	I_{OH} = −2 mA	2.4		
		PC Card	3.3 V CardBus	I_{OH} = −0.15 mA	0.9 V_{CC}		
			3.3 V 16-bit	I_{OH} = −0.15 mA	2.4		
			5 V 16-bit	I_{OH} = −0.15 mA	2.8		
		Miscellaneous§		I_{OH} = −4 mA	V_{CC}−0.6		
V_{OL}	Low-level output voltage	PCI	3.3 V	I_{OL} = 1.5 mA		0.1 V_{CC}	V
			5 V	I_{OL} = 6 mA		0.55	
		PC Card	3.3 V CardBus	I_{OL} = 0.7 mA		0.1 V_{CC}	
			3.3 V 16-bit	I_{OL} = 0.7 mA	0.4		
			5 V 16-bit	I_{OL} = 0.7 mA		0.55	
		Miscellaneous§		I_{OL} = 4 mA		0.5	
I_{OZ}	3-state output high-impedance	Output terminals	3.6 V	V_O = V_{CC} or GND		±20	µA
I_{OZL}	High-impedance, low-level output current	Output terminals	3.6 V	V_I = V_{CC}		−1	µA
			5.25 V	V_I = V_{CC}		−1	
I_{OZH}	High-impedance, high-level output current	Output terminals	3.6 V	V_I = V_{CC}†		10	µA
			5.25 V	V_I = V_{CC}†		25	
I_{IL}	Low-level input current	Input terminals	3.6 V	V_I = GND		±20	µA
		I/O terminals	3.6 V	V_I = GND	±20		
I_{IH}	High-level input current	PCI	3.6 V	V_I = V_{CC}‡		±20	µA
		Others	3.6 V	V_I = V_{CC}‡	±20		
		Input terminals	3.6 V	V_I = V_{CC}‡		10	
			5.25 V	V_I = V_{CC}‡		20	
		I/O terminals	3.6 V	V_I = V_{CC}‡		10	
			5.25 V	V_I = V_{CC}‡		25	

† For PCI and miscellaneous terminals, V_I = V_{CCP}. For PC Card terminals, V_I = V_{CCCB}.
‡ For I/O terminals, input leakage (I_{IL} and I_{IH}) includes I_{OZ} leakage of the disabled output.
§ Miscellaneous terminals are A03, A04, A05, A06, A07, A08, A09, A13, B04, B05, B06, B07, B08, B09, B11, B16, C04, C05, C06, C07, C08, C09, E06, E07, E08, E09, E10, F01, F02, F03, F08, G02, G03, G05, H03, J05, K05, N15, P12, P17
(CCDx, CDx, CLOCK, CLK_48, CVSx, DATA, GRST, LATCH, MC_PWR_CTRL_0, MC_PWR_CTRL_1, MS_BS, MS_CD, MS_CLK, MS_DATA2, MS_DATA3, MS_SDIO, PHY_TEST_MA, RSVD/VD0, SC_CD, SCL, SC_OC, SC_PWR_CTRL, SDA, SD_CD, SD_CLK, SD_CMD, SD_DAT0, SD_DAT1, SD_DAT2, SD_DAT3, SD_WP, SM_CD, SM_CLE, SPKROUT, SUSPEND, TEST0, USB_EN, VSx, and XD_CD terminals).

14.4 Electrical Characteristics Over Recommended Ranges of Operating Conditions (unless otherwise noted)

14.4.1 Device

PARAMETER		TEST CONDITION	MIN	MAX	UNIT
V_{TH}	Power status threshold, CPS input†	400-kΩ resistor†	4.7	7.5	V
V_O	TPBIAS output voltage	At rated I_O current	1.665	2.015	V
I_I	Input current (PC0−PC2 inputs)	V_{CC} = 3.6 V		5	µA

† Measured at cable power side of resistor.

14.4.2 Driver

PARAMETER		TEST CONDITION	MIN	MAX	UNIT
V_{OD}	Differential output voltage	56 Ω, See Figure 14−1	172	265	mV
I_{DIFF}	Driver difference current, TPA+, TPA−, TPB+, TPB−	Drivers enabled, speed signaling off	−1.05†	1.05†	mA
I_{SP200}	Common-mode speed signaling current, TPB+, TPB−	S200 speed signaling enabled	−4.84‡	−2.53‡	mA
I_{SP400}	Common-mode speed signaling current, TPB+, TPB−	S400 speed signaling enabled	−12.4‡	−8.10‡	mA
V_{OFF}	Off state differential voltage	Drivers disabled, See Figure 14−1		20	mV

† Limits defined as algebraic sum of TPA+ and TPA− driver currents. Limits also apply to TPB+ and TPB− algebraic sum of driver currents.
‡ Limits defined as absolute limit of each of TPB+ and TPB− driver currents.

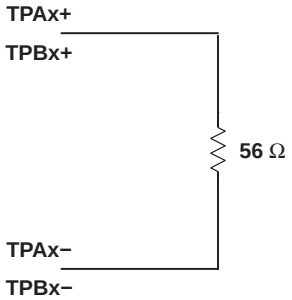

Figure 14−1. Test Load Diagram

14.4.3 Receiver

PARAMETER		TEST CONDITION	MIN	TYP	MAX	UNIT
Z_{ID}	Differential impedance	Drivers disabled	4	7		kΩ
					4	pF
Z_{IC}	Common-mode impedance	Drivers disabled	20			kΩ
					24	pF
V_{TH-R}	Receiver input threshold voltage	Drivers disabled	−30		30	mV
V_{TH-CB}	Cable bias detect threshold, TPBx cable inputs	Drivers disabled	0.6		1.0	V
$V_{TH}+$	Positive arbitration comparator threshold voltage	Drivers disabled	89		168	mV
$V_{TH}-$	Negative arbitration comparator threshold voltage	Drivers disabled	−168		−89	mV
$V_{TH-SP200}$	Speed signal threshold	TPBIAS−TPA common mode voltage, drivers disabled	49		131	mV
$V_{TH-SP400}$	Speed signal threshold		314		396	mV

14.5 PCI Clock/Reset Timing Requirements Over Recommended Ranges of Supply Voltage and Operating Free-Air Temperature

PARAMETER		ALTERNATE SYMBOL	TEST CONDITIONS	MIN	MAX	UNIT
t_c	Cycle time, PCLK	t_{cyc}		30		ns
$t_{w(H)}$	Pulse duration (width), PCLK high	t_{high}		11		ns
$t_{w(L)}$	Pulse duration (width), PCLK low	t_{low}		11		ns
t_r, t_f	Slew rate, PCLK	$\Delta v/\Delta t$		1	4	V/ns
t_w	Pulse duration (width), $\overline{GRST}$	t_{rst}		1		ms
t_{su}	Setup time, PCLK active at end of PRST	$t_{rst-clk}$		100		µs

14.6 Switching Characteristics for PHY Port Interface

PARAMETER		TEST CONDITIONS	MIN	TYP	MAX	UNIT
	Jitter, transmit	Between TPA and TPB			±0.15	ns
	Skew, transmit	Between TPA and TPB			±0.10	ns
t_r	TP differential rise time, transmit	10% to 90%, at 1394 connector	0.5		1.2	ns
t_f	TP differential fall time, transmit	90% to 10%, at 1394 connector	0.5		1.2	ns

14.7 Operating, Timing, and Switching Characteristics of XI

PARAMETER		MIN	TYP	MAX	UNIT
V_{DD}		3.0	3.3	3.6	V ($PLLV_{CC}$)
V_{IH}	High-level input voltage		$0.63V_{CC}$		V
V_{IL}	Low-level input voltage			$0.33V_{CC}$	V
	Input clock frequency		24.576		MHz
	Input clock frequency tolerance			<100	PPM
	Input slew rate	0.2		4	V/ns
	Input clock duty cycle	40%		60%	

14.8 PCI Timing Requirements Over Recommended Ranges of Supply Voltage and Operating Free-Air Temperature

This data manual uses the following conventions to describe time (t) intervals. The format is t_A, where *subscript A* indicates the type of dynamic parameter being represented. One of the following is used: t_{pd} = propagation delay time, t_d (t_{en}, t_{dis}) = delay time, t_{su} = setup time, and t_h = hold time.

PARAMETER			ALTERNATE SYMBOL	TEST CONDITIONS	MIN	MAX	UNIT
t_{pd}	Propagation delay time, See Note 6	PCLK-to-shared signal valid delay time	t_{val}	C_L = 50 pF, See Note 6		11	ns
		PCLK-to-shared signal invalid delay time	t_{inv}		2		
t_{en}	Enable time, high impedance-to-active delay time from PCLK		t_{on}		2		ns
t_{dis}	Disable time, active-to-high impedance delay time from PCLK		t_{off}			28	ns
t_{su}	Setup time before PCLK valid		t_{su}		7		ns
t_h	Hold time after PCLK high		t_h		0		ns

NOTE 6: PCI shared signals are AD31−AD0, C/$\overline{BE3}$−C/$\overline{BE0}$, $\overline{FRAME}$, $\overline{TRDY}$, $\overline{IRDY}$, $\overline{STOP}$, IDSEL, $\overline{DEVSEL}$, and PAR.

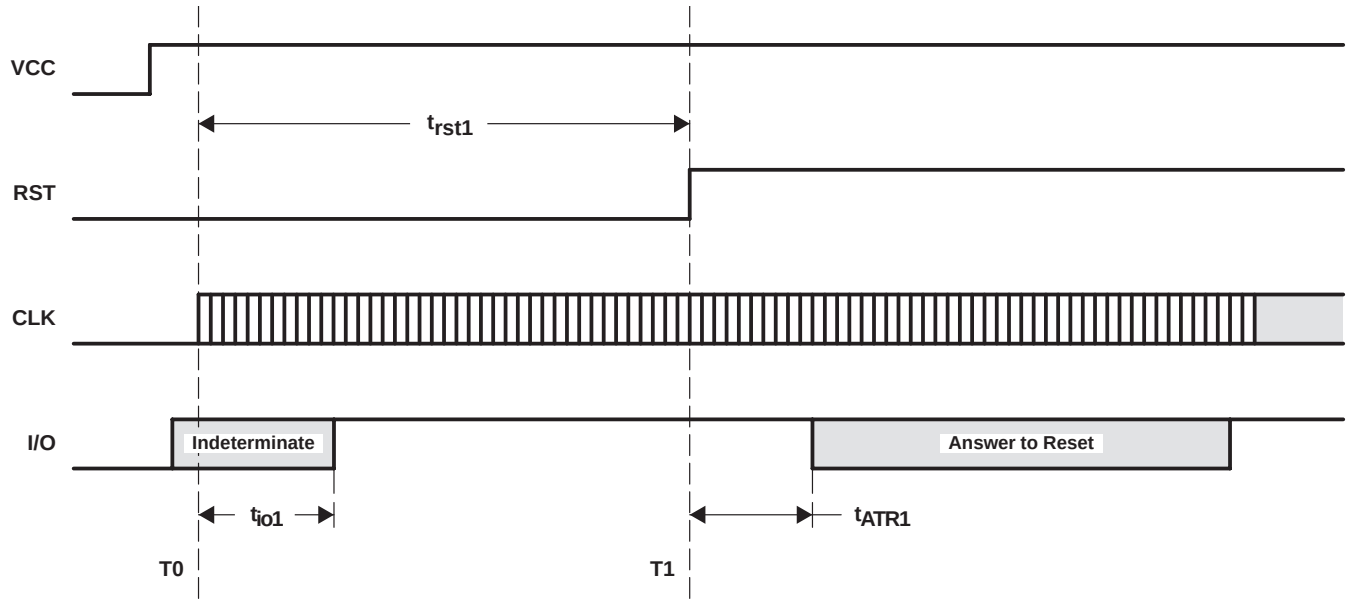

Figure 14−2. Cold Reset Sequence

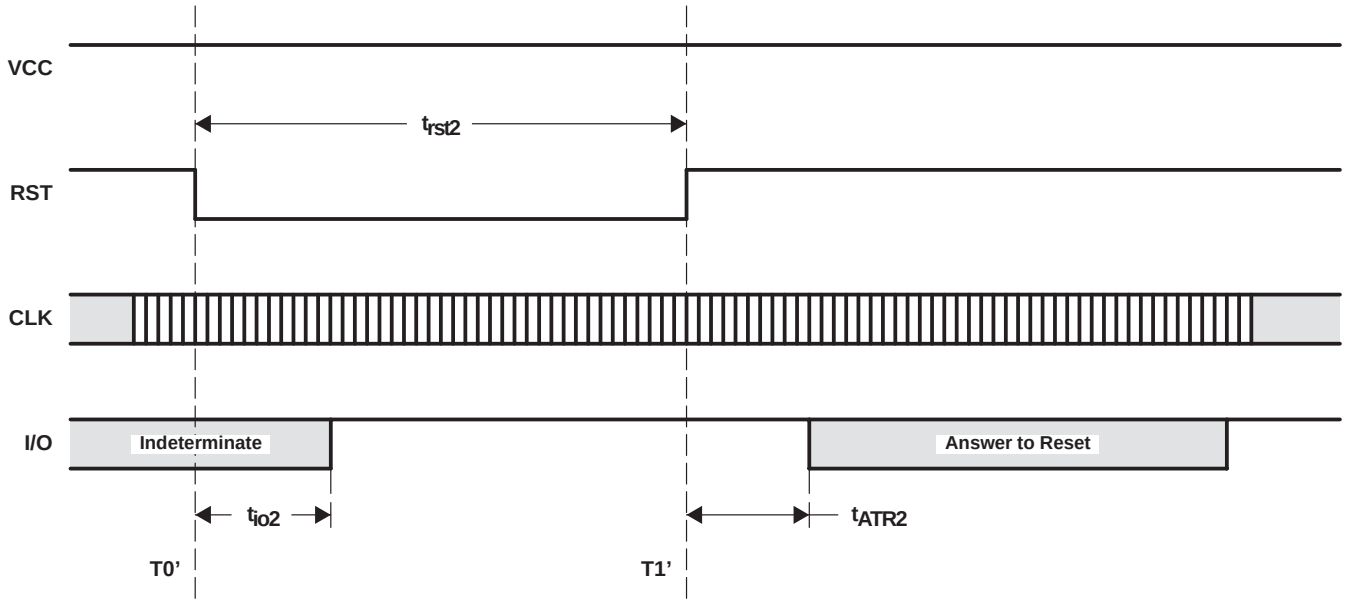

Figure 14−3. Warm Reset Sequence

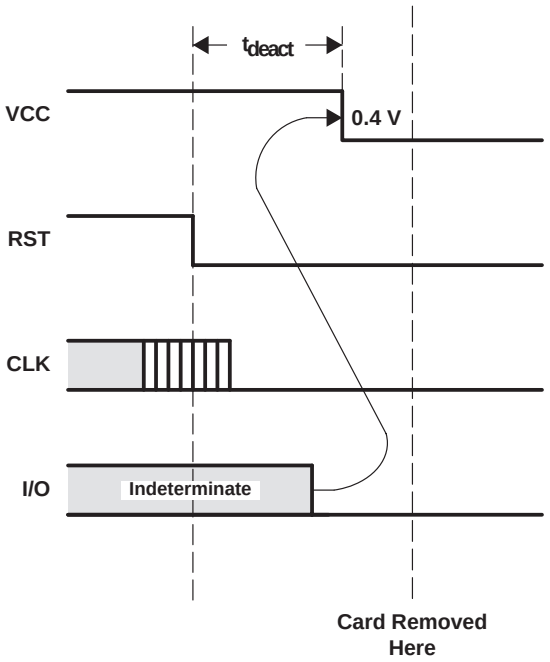

Figure 14−4. Contact Deactivation Sequence

14.9 Reset Timing

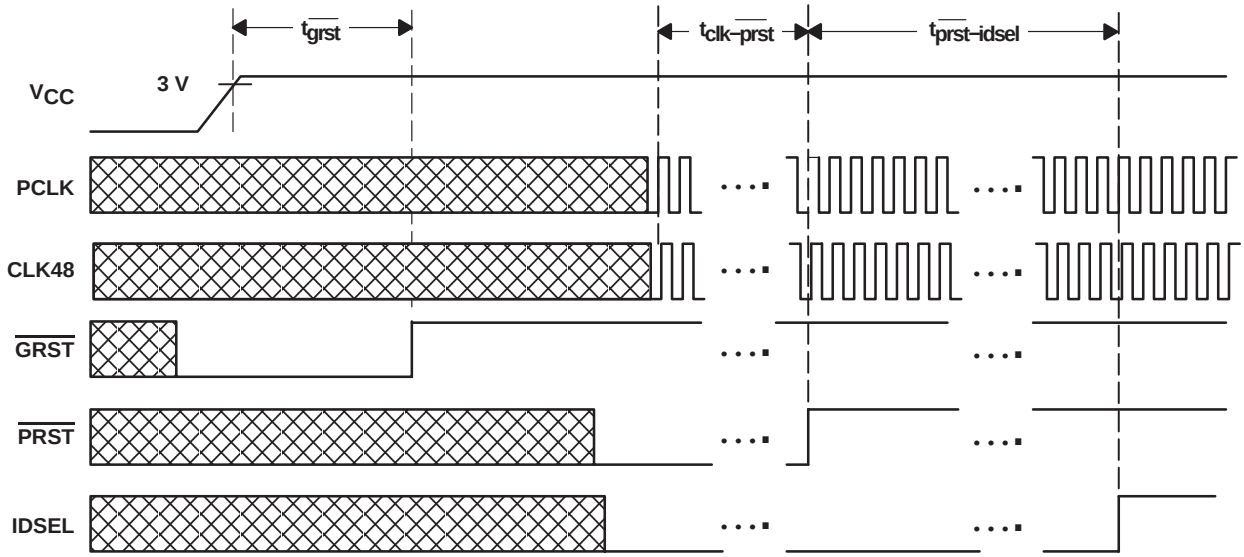

Figure 14−5. Reset Timing Diagram

PARAMETER		MIN	MAX	UNIT
t_{grst}	$V_{CC} \geq 3.0$ V to $\overline{GRST}$ ↑	2		ms
$t_{clk\text{-}prst}$	PCLK ↑ and CLK48 ↑ to $\overline{PRST}$ ↑	100		µs
$t_{prst\text{-}idsel}$	$\overline{PRST}$ ↑ to IDSEL ↑	3		µs

NOTES: 7. $\overline{GRST}$ may be asynchronously deasserted, that is, it does not require a valid PCLK.
8. There is no specific timing relationship of $\overline{GRST}$ to $\overline{PRST}$. However, if $\overline{GRST}$ is deasserted after $\overline{PRST}$ then the PCLK to $\overline{PRST}$ ↑ and $\overline{PRST}$ ↑ to IDSEL ↑ apply to $\overline{GRST}$.

15 Mechanical Data

The PCIxx12 device is available in the 216-terminal MicroStar BGA™ package (GHK) or the 216-terminal lead-free (Pb atomic number 82) MicroStar BGA™ package (ZHK). The following figure shows the mechanical dimensions for the GHK package. The GHK and ZHK packages are mechanically identical; therefore, only the GHK mechanical drawing is shown.

GHK (S-PBGA-N216) PLASTIC BALL GRID ARRAY

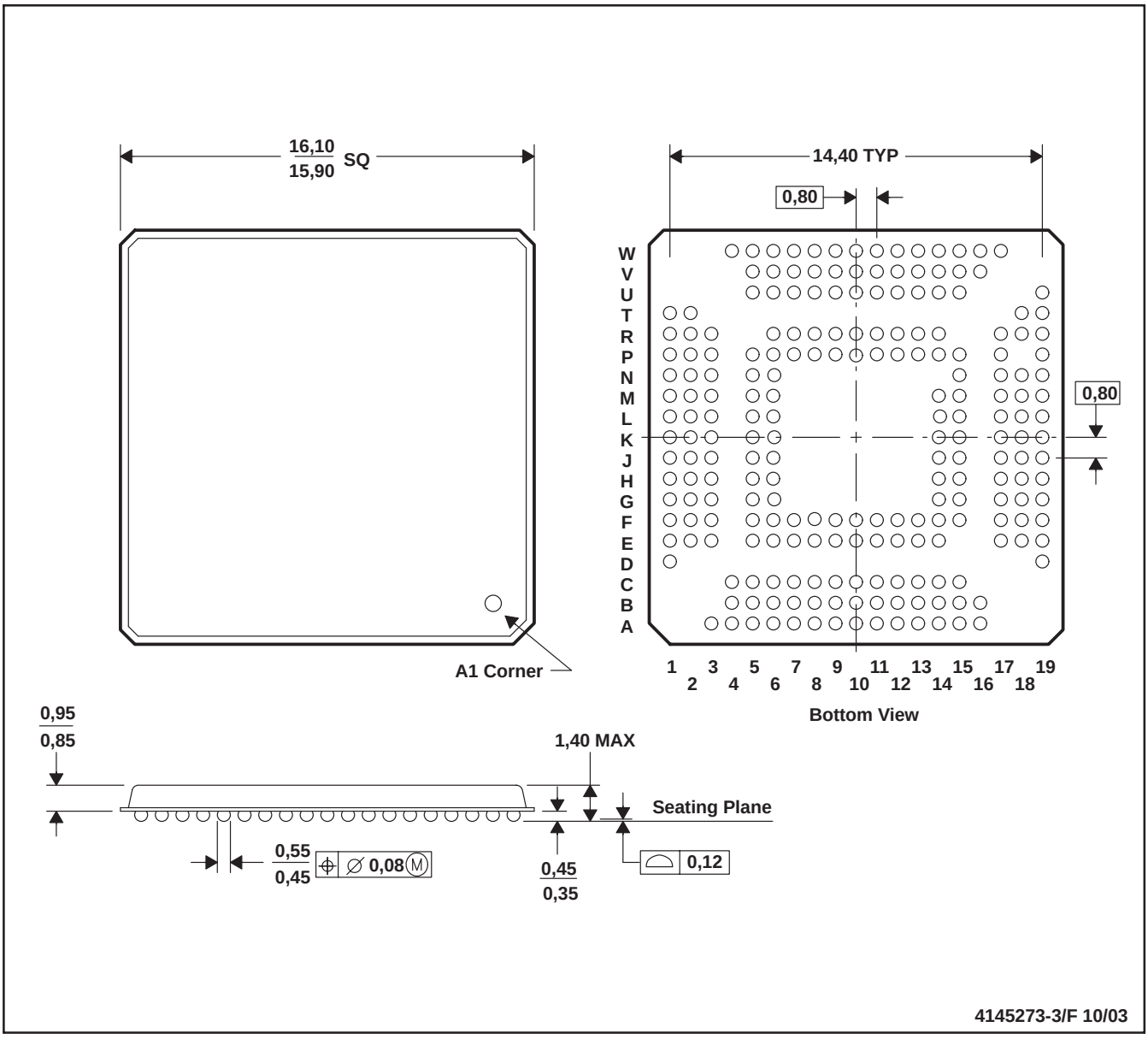

NOTES: B. All linear dimensions are in millimeters.
C. This drawing is subject to change without notice.
D. MicroStar BGA™ configuration.

MicroStar BGA is a trademark of Texas Instruments.

PACKAGING INFORMATION

Orderable Device	Status [1]	Package Type	Package Drawing	Pins	Package Qty	Eco Plan [2]	Lead/Ball Finish	MSL Peak Temp [3]
PCI4512ZHK	ACTIVE	BGA MICROSTAR	ZHK	216	90	Green (RoHS & no Sb/Br)	SNAGCU	Level-3-260C-168 HR
PCI6412ZHK	ACTIVE	BGA MICROSTAR	ZHK	216	90	Green (RoHS & no Sb/Br)	SNAGCU	Level-3-260C-168 HR
PCI6612ZHK	ACTIVE	BGA MICROSTAR	ZHK	216	1	Green (RoHS & no Sb/Br)	SNAGCU	Level-3-260C-168 HR
PCI7402ZHK	ACTIVE	BGA MICROSTAR	ZHK	216	90	Green (RoHS & no Sb/Br)	SNAGCU	Level-3-260C-168 HR
PCI7412ZHK	ACTIVE	BGA MICROSTAR	ZHK	216	1	Green (RoHS & no Sb/Br)	SNAGCU	Level-3-260C-168 HR
PCI7612ZHK	ACTIVE	BGA MICROSTAR	ZHK	216	1	Green (RoHS & no Sb/Br)	SNAGCU	Level-3-260C-168 HR
PCI8402ZHK	ACTIVE	BGA MICROSTAR	ZHK	216	90	Green (RoHS & no Sb/Br)	SNAGCU	Level-3-260C-168 HR
PCI8412ZHK	ACTIVE	BGA MICROSTAR	ZHK	216	90	Green (RoHS & no Sb/Br)	SNAGCU	Level-3-260C-168 HR
SN2005114512ZHK	ACTIVE	BGA MICROSTAR	ZHK	216	90	Green (RoHS & no Sb/Br)	SNAGCU	Level-3-260C-168 HR
SN2005118412ZHK	ACTIVE	BGA MICROSTAR	ZHK	216	90	Green (RoHS & no Sb/Br)	SNAGCU	Level-3-260C-168 HR
SNA7412ZHK	ACTIVE	BGA MICROSTAR	ZHK	216	1	Green (RoHS & no Sb/Br)	SNAGCU	Level-3-260C-168 HR

[1] The marketing status values are defined as follows:
ACTIVE: Product device recommended for new designs.
LIFEBUY: TI has announced that the device will be discontinued, and a lifetime-buy period is in effect.
NRND: Not recommended for new designs. Device is in production to support existing customers, but TI does not recommend using this part in a new design.
PREVIEW: Device has been announced but is not in production. Samples may or may not be available.
OBSOLETE: TI has discontinued the production of the device.

[2] Eco Plan - The planned eco-friendly classification: Pb-Free (RoHS) or Green (RoHS & no Sb/Br) - please check http://www.ti.com/productcontent for the latest availability information and additional product content details.
TBD: The Pb-Free/Green conversion plan has not been defined.
Pb-Free (RoHS): TI's terms "Lead-Free" or "Pb-Free" mean semiconductor products that are compatible with the current RoHS requirements for all 6 substances, including the requirement that lead not exceed 0.1% by weight in homogeneous materials. Where designed to be soldered at high temperatures, TI Pb-Free products are suitable for use in specified lead-free processes.
Green (RoHS & no Sb/Br): TI defines "Green" to mean Pb-Free (RoHS compatible), and free of Bromine (Br) and Antimony (Sb) based flame retardants (Br or Sb do not exceed 0.1% by weight in homogeneous material)

[3] MSL, Peak Temp. -- The Moisture Sensitivity Level rating according to the JEDEC industry standard classifications, and peak solder temperature.

Important Information and Disclaimer: The information provided on this page represents TI's knowledge and belief as of the date that it is provided. TI bases its knowledge and belief on information provided by third parties, and makes no representation or warranty as to the accuracy of such information. Efforts are underway to better integrate information from third parties. TI has taken and continues to take reasonable steps to provide representative and accurate information but may not have conducted destructive testing or chemical analysis on incoming materials and chemicals. TI and TI suppliers consider certain information to be proprietary, and thus CAS numbers and other limited information may not be available for release.

In no event shall TI's liability arising out of such information exceed the total purchase price of the TI part(s) at issue in this document sold by TI to Customer on an annual basis.

Общество с ограниченной ответственностью «МосЧип» ИНН 7719860671 / КПП 771901001
Адрес: 105318, г.Москва, ул.Щербаковская д.3, офис 1107

Данный компонент на территории Российской Федерации

Вы можете приобрести в компании MosChip.

Для оперативного оформления запроса Вам необходимо перейти по данной ссылке:

http://moschip.ru/get-element

Вы можете разместить у нас заказ для любого Вашего проекта, будь то серийное производство или разработка единичного прибора.

В нашем ассортименте представлены ведущие мировые производители активных и пассивных электронных компонентов.

Нашей специализацией является поставка электронной компонентной базы двойного назначения, продукции таких производителей как XILINX, Intel (ex.ALTERA), Vicor, Microchip, Texas Instruments, Analog Devices, Mini-Circuits, Amphenol, Glenair.

Сотрудничество с глобальными дистрибьюторами электронных компонентов, предоставляет возможность заказывать и получать с международных складов практически любой перечень компонентов в оптимальные для Вас сроки.

На всех этапах разработки и производства наши партнеры могут получить квалифицированную поддержку опытных инженеров.

Система менеджмента качества компании отвечает требованиям в соответствии с ГОСТ Р ИСО 9001, ГОСТ РВ 0015-002 и ЭС РД 009

Офис по работе с юридическими лицами:

105318, г.Москва, ул.Щербаковская д.3, офис 1107, 1118, ДЦ «Щербаковский»

Телефон: +7 495 668-12-70 (многоканальный)

Факс: +7 495 668-12-70 (доб.304)

E-mail: info@moschip.ru

Skype отдела продаж:
moschip.ru
moschip.ru_4
moschip.ru_6
moschip.ru_9