CUIDEVICES



# **MODEL:** PJ-002AH-SMT-TR | **DESCRIPTION:** DC POWER JACK

## FEATURES

- high current rating: 5 A
- internal switch
- RoHS compliant

RoHS

## SPECIFICATIONS

| parameter | conditions/description | min | typ | max | units |
|---|---|---|---|---|---|
| rated input voltage | | | 24 | | Vdc |
| rated input current | | | | 5.0 | A |
| contact resistance | | | | 30 | mΩ |
| insulation resistance | at 500 Vdc | 100 | | | MΩ |
| voltage withstand | for 1 minute | | | 500 | Vac |
| insertion/withdrawal force | | 0.3 | | 3 | kg |
| operating temperature | | -25 | | 85 | °C |
| life | | | 5,000 | | cycles |
| flammability rating | UL94V-0 | | | | |
| RoHS | yes | | | | |

## SOLDERABILITY

| parameter | conditions/description | min | typ | max | units |
|---|---|---|---|---|---|
| reel storage | -5~35°C, 25~80% humidity<br>reel opened: use within 1 month<br>reel unopened: use within 6 months | | | | |
| reflow soldering | see reflow profile | | | 260 | °C |

Note: 1. CUI Devices recommends usage of the product within 2 hours after T&R is opened. After 6 hours, CUI Devices recommends drying the parts prior to use.

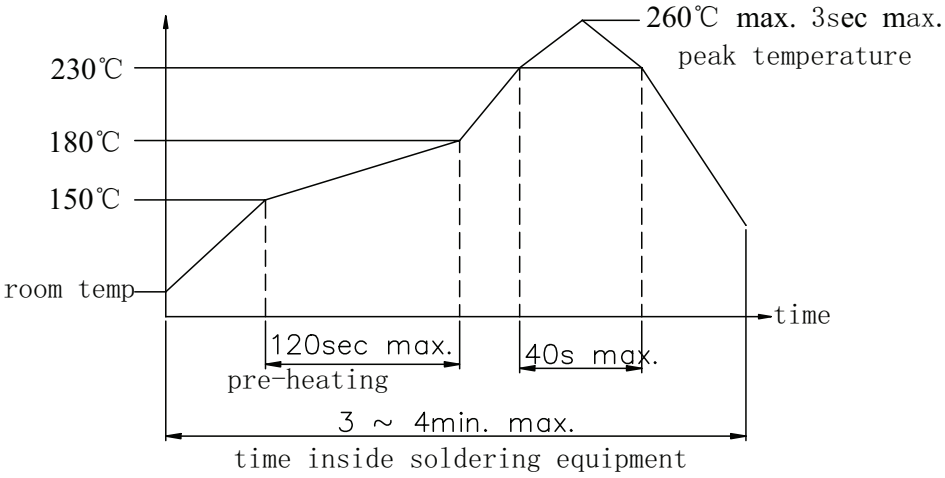

## MECHANICAL DRAWING

units: mm
tolerance:
X.X ±0.2 mm
X.XX ±0.10 mm
X.XXX ±0.050 mm
PCB: ±0.05 mm
unless otherwise specified
PCB thickness: 1.6 mm

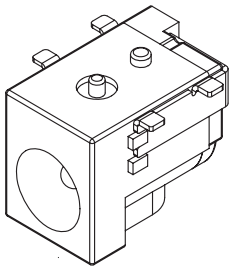

| DESCRIPTION | MATERIAL | PLATING/COLOR |
|---|---|---|
| center pin | copper | nickel |
| terminal 1 | brass | silver |
| terminal 2 | copper alloy | silver |
| terminal 3 | brass | silver |
| housing | PA10T (UL94V-0) | black |
| cover | PA10T (UL94V-0) | black |

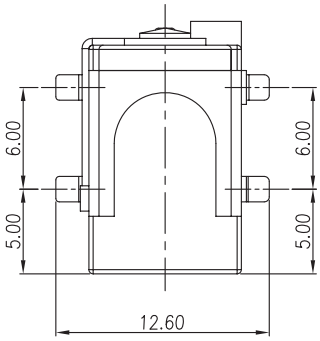


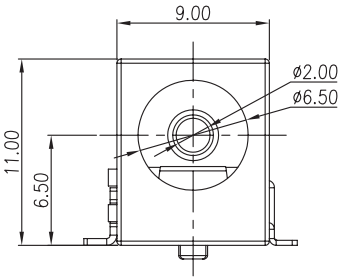


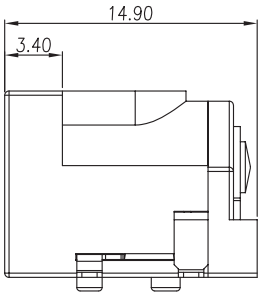


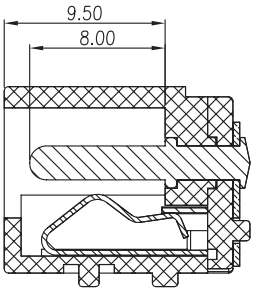


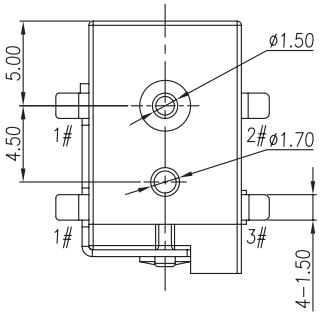


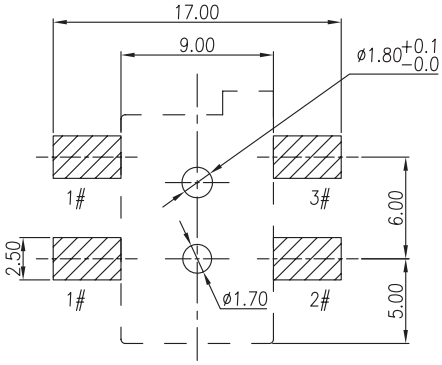


Recommended PCB Layout
Top View

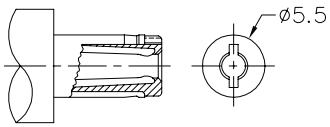


MATING PLUG
Jack Insertion Depth: 9.5 mm

| | |
|---|---|
| SCHEMATIC | 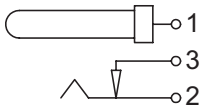 |
| Model | PJ-002AH-SMT-TR |
| Center Pin | Ø2.0 mm |

# PACKAGING

units: mm

Reel Size: Ø330 mm
Reel QTY: 300 pcs per reel

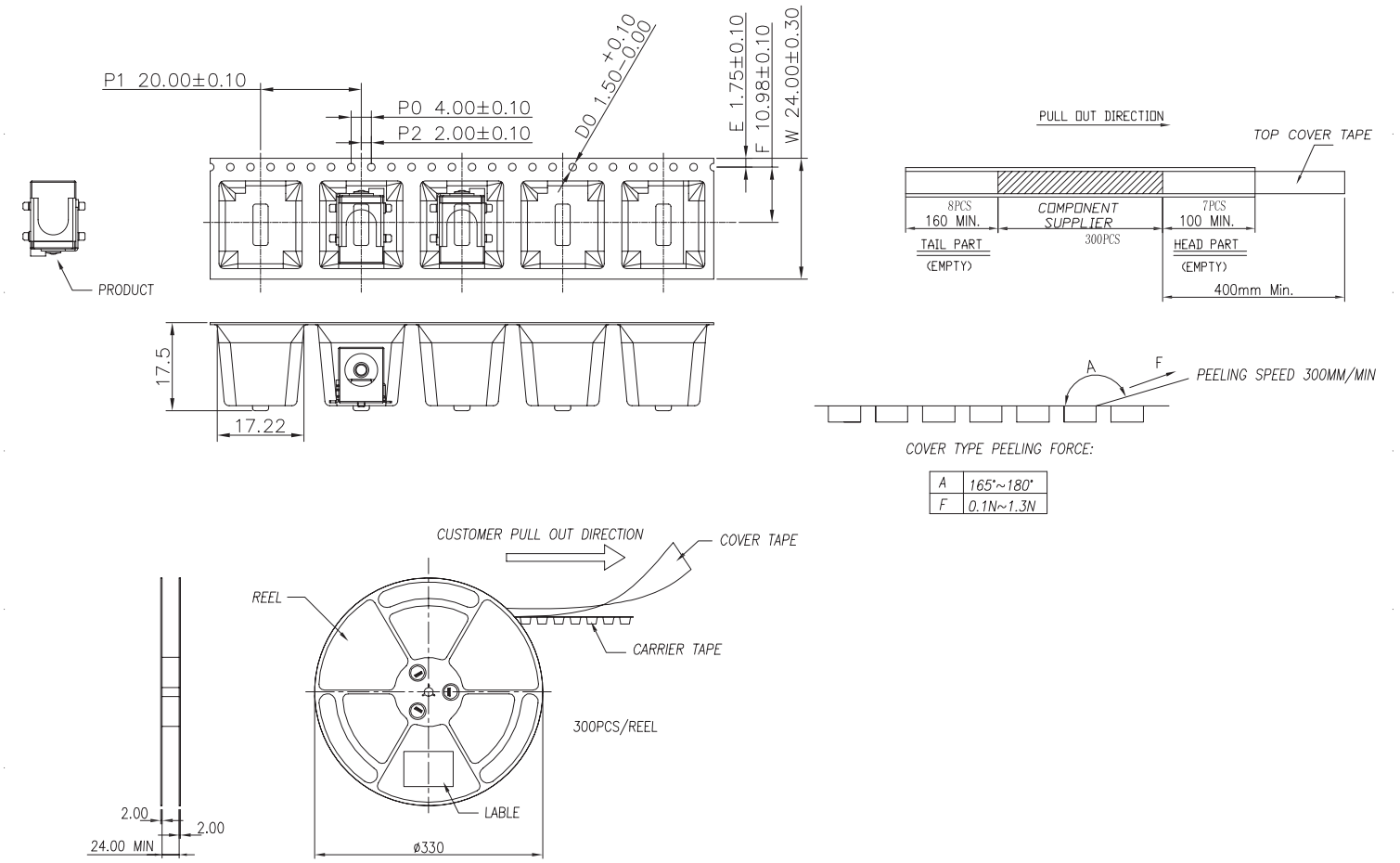

## REVISION HISTORY

| rev. | description | date |
|---|---|---|
| 1.0 | initial release | 10/19/2005 |
| 1.01 | updated operating temperature | 06/17/2011 |
| 1.02 | added jack insertion depth | 09/13/2012 |
| 1.03 | added TR package option | 11/28/2012 |
| 1.04 | increased voltage rating | 04/28/2016 |
| 1.05 | added storage and drying conditions, and tape and reel packaging details | 10/13/2017 |
| 1.06 | brand update | 10/30/2019 |
| 1.07 | logo, datasheet style update | 08/05/2022 |
| 1.08 | updated tape and reel packaging | 06/19/2023 |

The revision history provided is for informational purposes only and is believed to be accurate.

CUI Devices offers a one (1) year limited warranty. Complete warranty information is listed on our website.

CUI Devices reserves the right to make changes to the product at any time without notice. Information provided by CUI Devices is believed to be accurate and reliable. However, no responsibility is assumed by CUI Devices for its use, nor for any infringements of patents or other rights of third parties which may result from its use.

CUI Devices products are not authorized or warranted for use as critical components in equipment that requires an extremely high level of reliability. A critical component is any component of a life support device or system whose failure to perform can be reasonably expected to cause the failure of the life support device or system, or to affect its safety or effectiveness.