MODEL: MJ-3523-SMT-TR | DESCRIPTION: AUDIO JACK

FEATURES

- 3.5 mm
- right angle
- reflow solder compatible
- surface mount

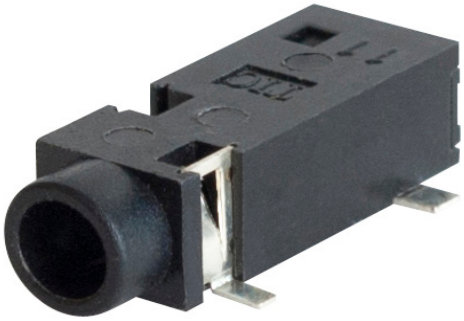

SPECIFICATIONS

parameter	conditions/description	min	typ	max	units
rated input voltage			12		Vdc
rated input current				1	A
contact resistance				50	mΩ
insulation resistance	at 500 Vdc	100			MΩ
voltage withstand	for 1 minute			500	Vac
insertion/withdrawal force		0.3		3	kg
operating temperature		-25		85	°C
life			5,000		cycles
flammability rating	UL94V-0				
RoHS	yes				

SOLDERABILITY

parameter	conditions/description	min	typ	max	units
reflow soldering	see reflow profile	260	265	270	°C

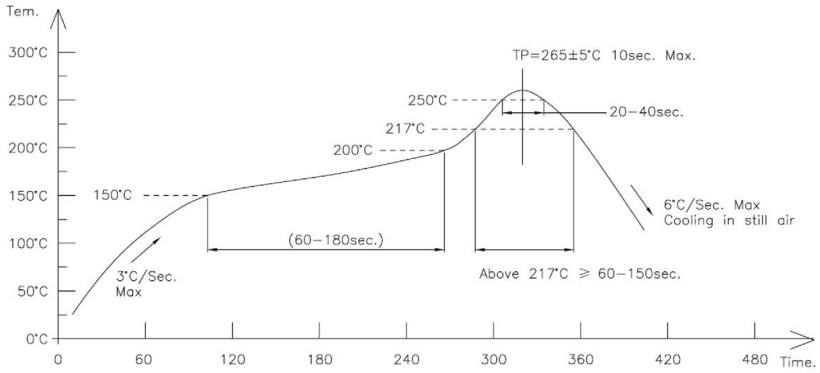

MECHANICAL DRAWING

units: mm
tolerance:
X. ±0.50 mm
X.X ±0.30 mm
X.XX ±0.20 mm
PCB: ±0.05 mm
unless otherwise specified

DESCRIPTION	MATERIAL	PLATING/COLOR
terminal 1	copper alloy	silver
terminal 2	copper alloy	silver
terminal 10	brass	silver
housing	PA10T (UL94V-0)	black

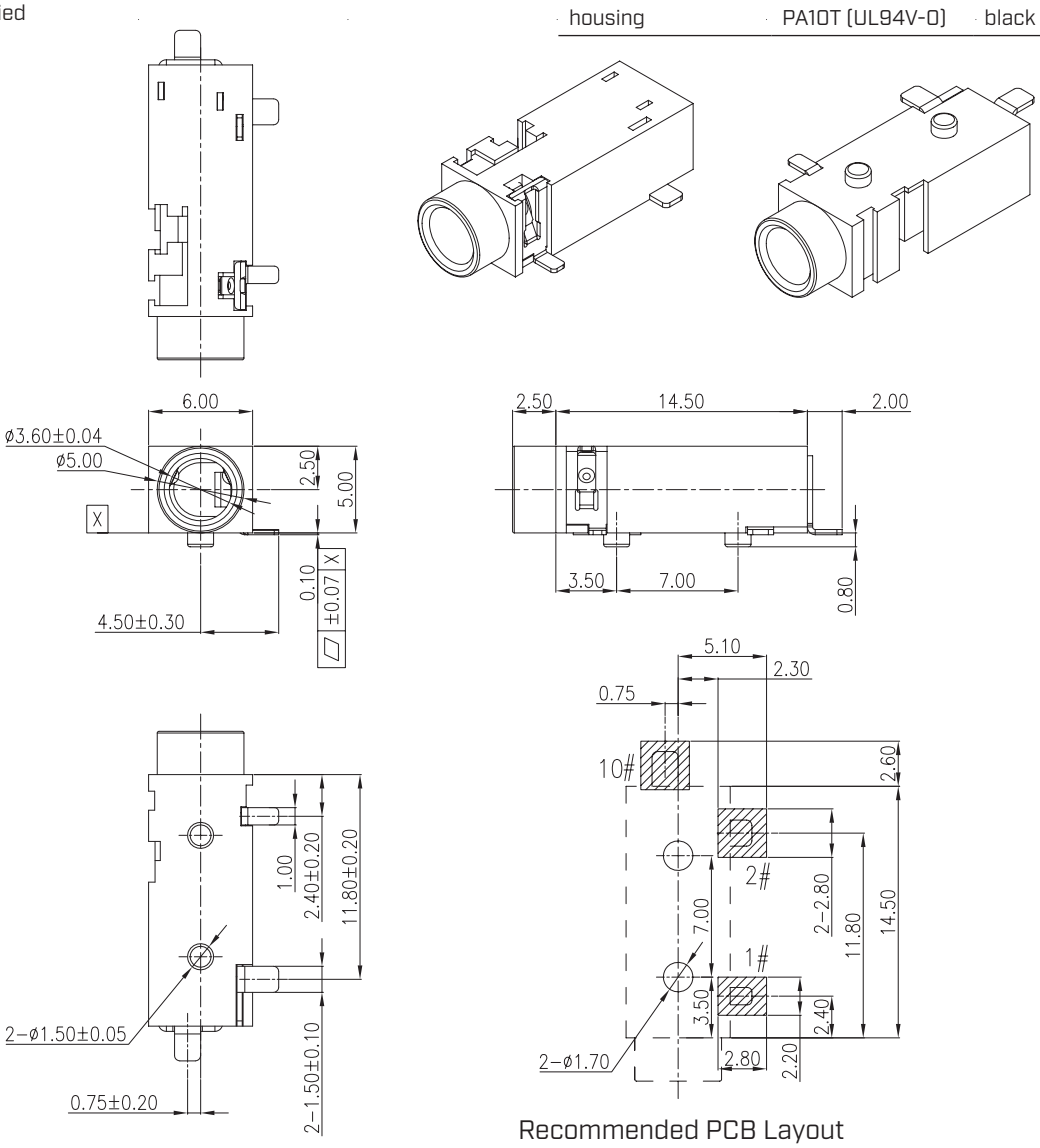

Recommended PCB Layout
Top View

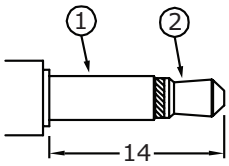

Ø3.5 MATING PLUG

Schematic	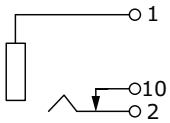
PIN	
1	sleeve
2	tip
10	tip switch

PACKAGING

units: mm

Reel Size: Ø380mm
Reel QTY: 1,000 pcs per reel

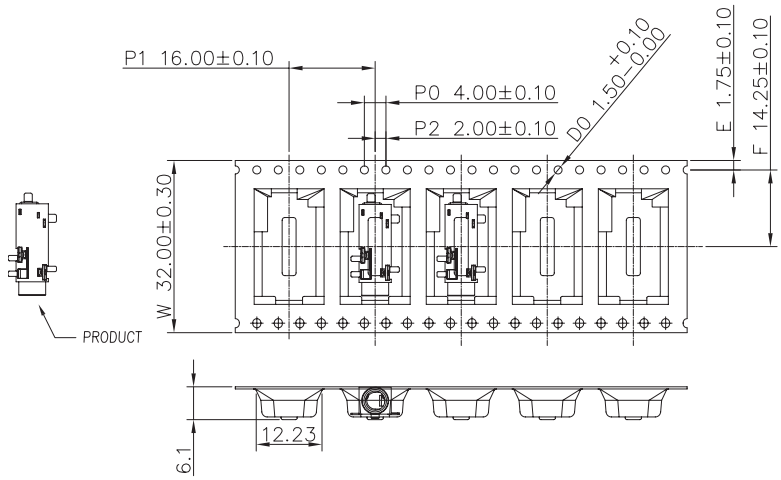

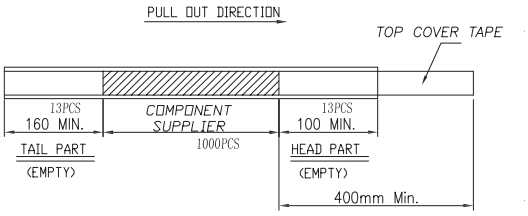

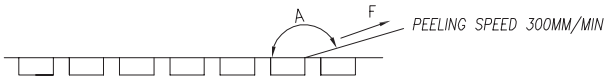

COVER TYPE PEELING FORCE:

A	165°~180°
F	0.1N~1.3N

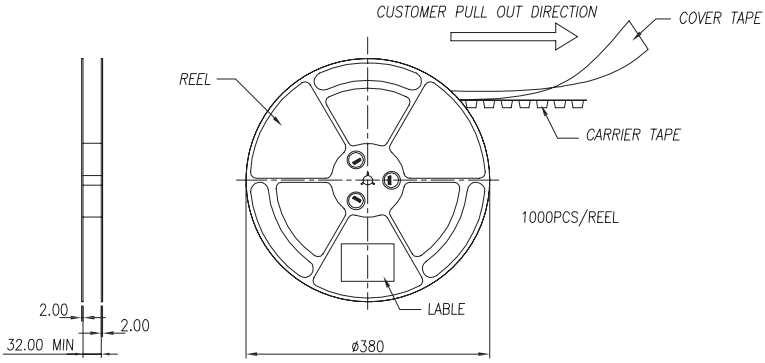

REVISION HISTORY

rev.	description	date
1.0	initial release	12/02/2005
1.01	updated plastic mold	12/18/2007
1.02	corrected dimension from 2.15 to 1.40 mm	08/18/2009
1.03	brand update	03/30/2020
1.04	product reengineered for improved manufacturability and production yield, see PCN for details	03/06/2023

The revision history provided is for informational purposes only and is believed to be accurate.

CUI Devices offers a one (1) year limited warranty. Complete warranty information is listed on our website.

CUI Devices reserves the right to make changes to the product at any time without notice. Information provided by CUI Devices is believed to be accurate and reliable. However, no responsibility is assumed by CUI Devices for its use, nor for any infringements of patents or other rights of third parties which may result from its use.

CUI Devices products are not authorized or warranted for use as critical components in equipment that requires an extremely high level of reliability. A critical component is any component of a life support device or system whose failure to perform can be reasonably expected to cause the failure of the life support device or system, or to affect its safety or effectiveness.