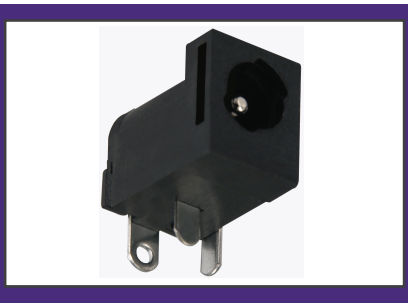

2D Drawing	IGES	STEP	3D PDF
Solder Profile	CofC RoHS Compliant	CofC REACH Compliant	UL Plastic File
Certificate of Origin	Check Stock	Request a Sample	Send Us An Email

Generated Part Number

KLDX-0202-AP-LT

Part Number Builder

KLDX-0202	–	A	P	LT
Series		Diameter	Peg	Type

Series
KLDX-0202 - PCB Mount DC Power Jack Locking Type

Diameter
A - 2.0mm Center Pin Diameter
B - 2.5mm Center Pin Diameter

Peg
Blank - without Peg
P - with Peg

Type
LT - Locking Type

Contact Kycon For Other Options

E140125 LR78160

DC POWER CONNECTORS: KLDX Series

Locking Type PCB Mount DC Power Jack

Product Features

2.0mm and 2.5mm
Built-In DC On/Off Switch
Locking Feature (Will Lock with Kycon Locking Plug)
To Be Used with Locking/Non-Locking Tuning Fork Style Plug
Laptop and Palm Computers, Portable Modems, Radar Detectors, and Other Portable Device Applications
CSA/NRTL Certified File No. LR78160
UL File No. E140125

Performance Specifications

Materials and Finish
Body: PBT Thermoplastic, UL94V-0 Rated, Color Black
Center Pin: Brass, Nickel Plated
Contact #1: Brass, Tin Plated
Contact #2: Phosphor Bronze, Tin Plated
Contact #3: Brass, Tin Plated

Electrical Characteristics

Rated Current: 3.5A
Rated Voltage: 24V DC
Insulation Resistance:
50 Megohms Min. at 100 or 200V DC for 1 Minute

Mechanical Characteristics

Durability Test: 5000 Cycles
Insertion Force: 0.3kg - 2.0kg
Extraction Force: 0.3kg - 2.0kg
Operating Temperature: -25˚C to +85˚C

Recommended to be used with Kycon locking plug (tuning fork design):
KLDX-PA-0202-A-LT, KLDX-PA-0202-B-LT

If used with non-locking plug, tuning fork design is required. See picture.

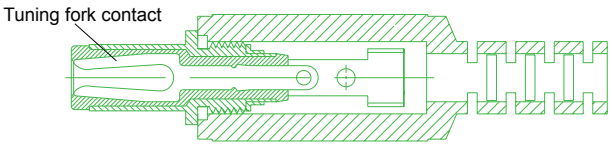
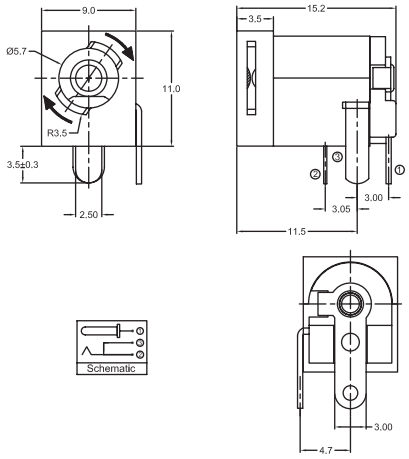
KLDX-0202 Series
Dimensions in mm
KLDX-0202-x-LT