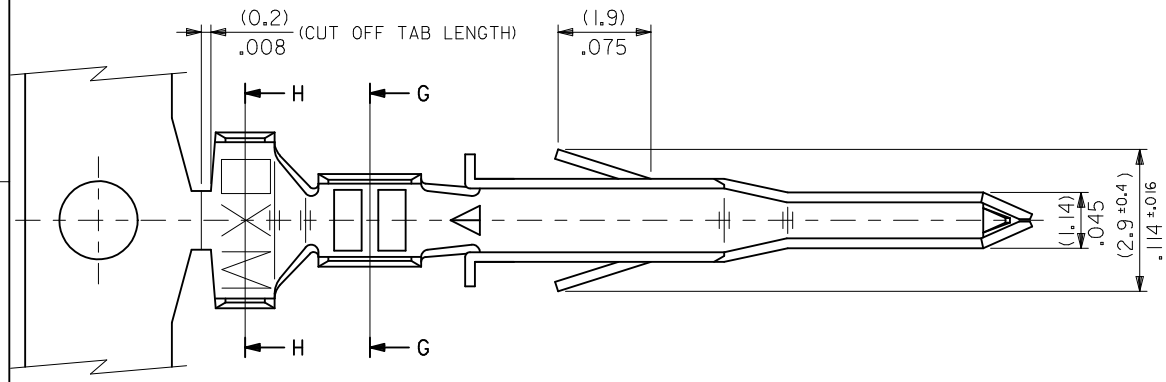

NOTES

1. MATERIAL: SEE CHART
2. FINISH: SEE CHART
3. PRODUCT SPECIFICATION: PS-5556-001, PS-5556-002, PS-5556-003
4. PACKAGING SPECIFICATION: PK-5558-001 FOR CHAIN
   PK-5556-003 FOR LOOSE
5. MATES WITH TERMINAL: 5556 SERIES.
6. APPLICIABLE HOUSING: 5559, 30068, 42475 SERIES.
7. THE NUMBER OF SERRATIONS TO BE ONE FOR WIRE RANGE #22-28.
8. WHEN TERMINALS ARE INSTALLED IN THE HOUSING THE WIRES ARE TO BE DRESSED IN SUCH A MANNER TO ALLOW THE TERMINALS TO FLOAT FREELY IN THE POCKET.
9. THIS TERMINAL IS DESIGNED FOR SINGLE WIRE CRIMPING.
10. PART CONFORMS TO CLASS "B" REQUIREMENTS OF COSMETIC SPECIFICATION PS-45499-002.

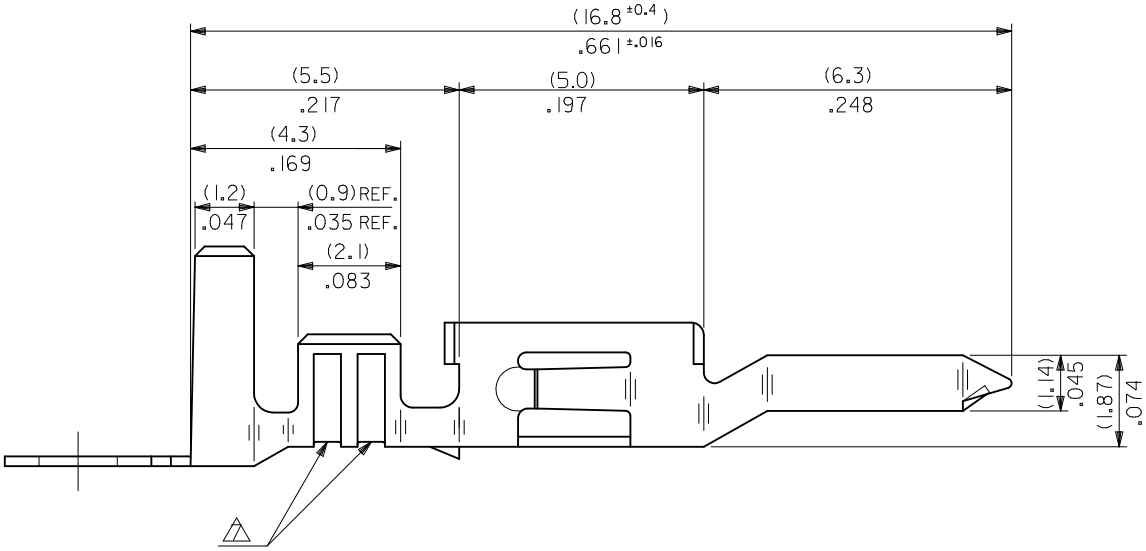

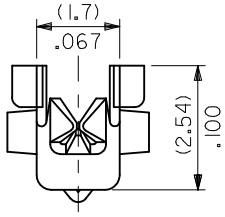

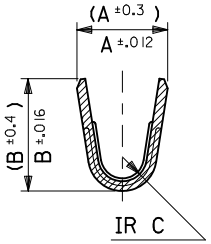

SECT. G-G

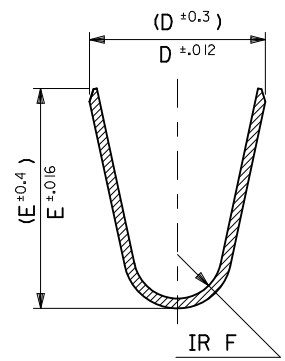

SECT. H-H

UPDATED NOTES EC NO: UCP2010-2478 DRWN: JJAGUILAR 2010/04/06 CH'KD: JBELL 2010/04/09 APPR: FSMITH 2010/04/09	REV	DESCRIPTION	QUALITY SYMBOLS F_A=0 F_C=0 F_P=0	GENERAL TOLERANCES (UNLESS SPECIFIED)	DIMENSION STYLE MM/IN	SCALE 10:1	DESIGN UNITS METRIC
					DRAWN BY H.HIRAMOTO DATE 1991/03/12	TITLE MINI-FIT JR OVERALL TIN MALE CRIMP TERMINAL	THIRD ANGLE PROJECTION
					CHECKED BY S.KUNISHI DATE 1998/07/07		
					APPROVED BY H.MUKUSHIMA DATE 1998/07/07	molex MOLEX INCORPORATED	
					MATERIAL NO. SEE CHART	DOCUMENT NO. SD-5558****	SHEET NO. 1 OF 2
					SIZE B	THIS DRAWING CONTAINS INFORMATION THAT IS PROPRIETARY TO MOLEX INCORPORATED AND SHOULD NOT BE USED WITHOUT WRITTEN PERMISSION	

	mm	INCH
4 PLACES	± ---	± ---
3 PLACES	± ---	± .008
2 PLACES	± .20	± .008
1 PLACE	± .2	± ---
ANGULAR ± 3 °		

DRAFT WHERE APPLICABLE MUST REMAIN WITHIN DIMENSIONS

L

tb_frame_B_P_ME_T
Rev. F 2009/06/18

MATERIAL	F	E	D	C	B	A	INS. RANGE	WIRE RANGE	EDP NO.	ENG. NO.	FORM
TIN PLATED PHOSPHOR BRONZE	(0.9) / .035	(4.5) / .177	(3.6) / .142	(0.6) / .024	(2.7) / .106	(2.3) / .091	∅ (3.1) / .122 MAX.	#16	39-00-0084	5558 PBT3L	LOOSE
									-0083	PBT3	CHAIN
	(0.6) / .024	(2.3) / .091	(2.3) / .091	(0.4) / .016	(1.65) / .065	(1.8) / .071	∅ (0.9-1.8) / .035-.071	#22-28	-0068	PBT2L	LOOSE
									-0067	PBT2	CHAIN
	(0.9) / .035	(4.5) / .177	(3.6) / .142	(0.5) / .020	(2.3) / .091	(1.9) / .075	∅ (1.3-3.1) / .051-.122	#18-24	-0062	PBTL	LOOSE
									-0061	PBT	CHAIN
TIN OVER COPPER PLATED BRASS	(0.9) / .035	(4.5) / .177	(3.6) / .142	(0.6) / .024	(2.7) / .106	(2.3) / .091	∅ (3.1) / .122 MAX.	#16	-0082	T3L	LOOSE
									-0081	T3	CHAIN
	(0.6) / .024	(2.3) / .091	(2.3) / .091	(0.4) / .016	(1.65) / .065	(1.8) / .071	∅ (0.9-1.8) / .035-.071	#22-28	-0049	T2L	LOOSE
									-0048	T2	CHAIN
	(0.9) / .035	(4.5) / .177	(3.6) / .142	(0.5) / .020	(2.3) / .091	(1.9) / .075	∅ (1.3-3.1) / .051-.122	#18-24	-0041	TL	LOOSE
									39-00-0040	5558 T	CHAIN

UPDATE TITLE BLOCK
EC NO: UCP2010-2478
DRWN: JJAGUILAR 2010/04/06
CHKD: JBELL 2010/04/09
APPR: FSMITH 2010/04/09

REV | DESCRIPTION

QUALITY SYMBOLS
F_A=0
F_C=0
F_P=0

GENERAL TOLERANCES (UNLESS SPECIFIED)

	mm	INCH
4 PLACES	± ---	± ---
3 PLACES	± ---	± .008
2 PLACES	± .20	± .008
1 PLACE	± .2	± ---

ANGULAR ± 3 °

DRAFT WHERE APPLICABLE MUST REMAIN WITHIN DIMENSIONS

DIMENSION STYLE: MM/IN
SCALE: 10:1
DESIGN UNITS: METRIC
THIRD ANGLE PROJECTION

DRAWN BY: H.HIRAMOTO DATE: 1991/03/12
CHECKED BY: S.KUNISHI DATE: 1998/07/07
APPROVED BY: M.FUKUSHIMA DATE: 2010/04/09
FSMITH

TITLE: MINI-FIT JR OVERALL TIN MALE CRIMP TERMINAL

molex MOLEX INCORPORATED

MATERIAL NO.: SEE CHART
DOCUMENT NO.: SD-5558****
SHEET NO.: 2 OF 2
SIZE: B

THIS DRAWING CONTAINS INFORMATION THAT IS PROPRIETARY TO MOLEX INCORPORATED AND SHOULD NOT BE USED WITHOUT WRITTEN PERMISSION

НИОКР СИСТЕМС

ООО «НИОКРсистемс» - это оперативные поставки широкого спектра электронных компонентов отечественного и импортного производства напрямую от производителей и с крупнейших мировых складов. Реализуемая нашей компанией продукция насчитывает более полумиллиона наименований.

Благодаря этому наша компания предлагает к поставке практически не ограниченный ассортимент компонентов как оптовыми, мелкооптовыми партиями, так и в розницу.

Благодаря развитой сети поставщиков, помогаем в поиске и приобретении экзотичных или снятых с производства компонентов.

Наша компания это:

- Гарантия качества поставляемой продукции
- Широкий ассортимент
- Минимальные сроки поставок
- Техническая поддержка
- Подбор комплектации
- Индивидуальный подход
- Гибкое ценообразование
- Работаем по 275 ФЗ

ООО «НИОКР СИТЕМС»
Москва, 125362, Россия, ул. Вишневая, д. 9, к. 1, Блок 104 а и 104 в

Телефон: 8 (495) 268-14-82
Email: n@nsistems.ru

ИНН: 7735154786
ОГРН: 1167746717709