This document was generated on 05/17/2010

PLEASE CHECK WWW.MOLEX.COM FOR LATEST PART INFORMATION

Part Number: 0002061101

Status: Active

Overview: standard_062

Description: 1.57mm (.062") Diameter, Standard .062" Pin and Socket Crimp Terminal, Female, with Tin (Sn) Plated Brass Contact, 18-24 AWG, Reel

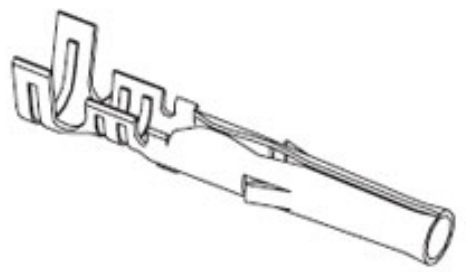

Series

image - Reference only

Documents:

Drawing (PDF) | RoHS Certificate of Compliance (PDF)

General

Product Family	Crimp Terminals
Series	1561
Crimp Quality Equipment	Yes
Overview	standard_062
Product Name	Standard .062"

Physical

Gender	Female
Material - Metal	Brass
Material - Plating Mating	Tin
Material - Plating Termination	Tin
Packaging Type	Reel
Plating min: Mating (µin)	20
Plating min: Mating (µm)	0.50
Plating min: Termination (µin)	20
Plating min: Termination (µm)	0.50
Termination Interface: Style	Crimp or Compression
Wire Insulation Diameter	1.52-3.05mm (.060-.120")
Wire Size AWG	18, 20, 22, 24
Wire Size mm²	N/A

Material Info

Old Part Number	1561-(P901)

Reference - Drawing Numbers

Sales Drawing	SD-1561-*

EU RoHS
ELV and RoHS Compliant
REACH SVHC
Contains SVHC: No
Halogen-Free Status
Halogen-Free

China RoHS

Need more information on product environmental compliance?

Email productcompliance@molex.com
For a multiple part number RoHS Certificate of Compliance, click here

Please visit the Contact Us section for any non-product compliance questions.

Search Parts in this Series
1561Series

Application Tooling | **FAQ**

Tooling specifications and manuals are found by selecting the products below. Crimp Height Specifications are then contained in the Application Tooling Specification document.

Global

Description	Product #
Mini-Mac™ Applicator	0638914000
Hand Crimp Tool for Standard .062" Pin and Socket Crimp Terminals, 18-24 AWG	0638191300
Manual Extraction Tool	0011030002
Terminator Die	0011402004
Hand Crimper - DISTRIBUTION ONLY	0638111000

Japan

Description	Product #
Hand Insertion Tool	0011020001

This document was generated on 05/17/2010

PLEASE CHECK WWW.MOLEX.COM FOR LATEST PART INFORMATION

1561

PART NO.	ENG. NO.	
02-06-1101	1561-(P901)	
02-06-1103	1561-(P901)L	
02-06-5101	1561-(P561)	
02-06-5102	1561-(P561)L	
02-06-5108	1561-(P228)	
02-06-5109	1561-(P228)L	
02-06-5100	1561-(P550)	
02-06-5103	1561-(P550)L	
02-06-5105	1561-(P591)	
02-06-5104	1561-(P591)L	
02-06-1118	1561-1(P901)	
NOT TOOLED	1561-1(P901)L	

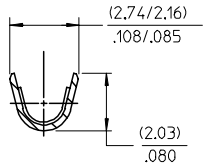

SECT. "B-B"

SCALE:10X

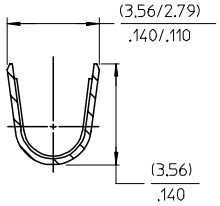

SECT. "C-C"

SCALE:10X

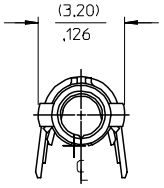

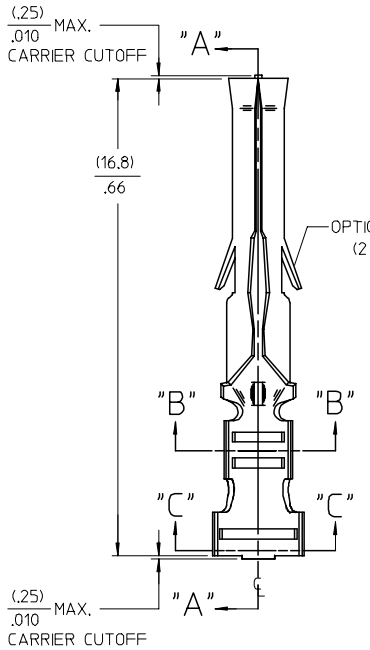

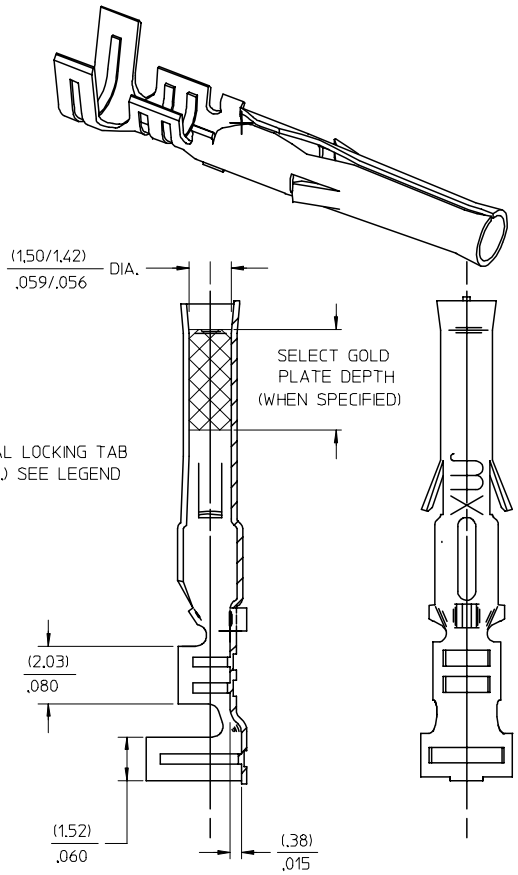

SECT. "A-A"

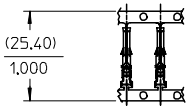

CARRIER VIEW
ACTUAL SIZE

LEGEND

1561-*(****)*

- BLANK=WITH LOCKING TABS
- 1=WITHOUT LOCKING TABS
- P=PREPLATE
- BLANK=POSTPLATE
- FINISH CODE
- FORM
  - BLANK=CHAIN
  - L=LOOSE

NOTES:

1. MATERIAL: BRASS
2. FINISH:
   - 901 HOT TIN DIP (.00051)/.000020 MIN.
   - 228 SELECT GOLD PLATE (.00075)/.000030 MIN. IN CONTACT AREA, SELECT TIN. (.00250)/.000100 MIN. IN CRIMP AREA OVER (.00125)/.000050 MIN. NICKEL OVERALL.
   - 561 SELECT GOLD PLATE (.00076)/.000030 MIN. IN CONTACT AREA, OVER (.00127)/.000050 MIN. NICKEL OVERALL.
   - 591 SELECT GOLD PLATE (.00175)/.000050 MIN. IN CONTACT AREA, OVER (.00127)/.000050 MIN. NICKEL OVERALL WITH (.000025)/.000010 MAX. GOLD FLASH OVERALL.
   - 550 SELECT GOLD PLATE (.00038)/.000015 MIN. IN CONTACT AREA, OVER (.00076)/.000030 MIN. NICKEL OVERALL WITH (.000025)/.000010 MAX. GOLD FLASH OVERALL.
   - * THE PRIMARY SHIPPING CARTON WILL BE LABELED, "COMPLIANT TO RoHS DIRECTIVE 2004/95/EC AND ANNEX II OF DIRECTIVE 2000/53/EC", AND CARTONS WITHOUT THIS LABEL MAY CONTAIN PRODUCT WITH TIN-LEAD."
3. PRODUCT SPECIFICATION: PS-02-06.
4. PACKAGING INFORMATION: NOT AVAILABLE
5. TERMINAL FOR USE WITH (1.57)/.062 DIA. SERIES HOUSINGS AND WILL ACCEPT 18 THRU 24 AWG WIRE WITH (1.52/3.05)/.060/.120 INSULATION DIA.

REV	DESCRIPTION
AP	REVISED/REDRAWN UCP2004-2257 RHOLTS 05/14/04
AO	REINSTATE 02065105 UCP2003-1827 ELHAG, 03/02/24
AN	OBSOLETE P/N UCR2002-0270 COMERCI 01/9/25
AM1	ADDED ISO VIEW UCR1998-0248 WANG 98-05-21
AM	REV. AND REDRAWN PER ECR 10372 GEP 8-20-87 RW

SEE REVISION BLOCK
EC NO: UCP2004-2257
DRWN:RHOLTS 2005/03/30
CHKD:FSMITH 2005/03/30
APPR:FSMITH 2005/04/11
REV: AP

QUALITY SYMBOLS: ▼ = 0; (C) = 0

GENERAL TOLERANCES (UNLESS SPECIFIED)	mm	INCH
4 PLACES	± ---	± ---
3 PLACES	± ---	± .005
2 PLACES	± 0.13	± .010
1 PLACE	± 0.25	± ---
ANGULAR ±1/2°		

DRAFT WHERE APPLICABLE
MUST REMAIN WITHIN DIMENSIONS

SCALE 6:1 | DESIGN UNITS INCH | DIMENSION STYLE IN/MM | THIRD ANGLE PROJECTION | REVISE ON CAD ONLY

DRAWN BY GEW 1991/02/19
CHECKED BY RW 1991/02/19
APPROVED BY GWF 1991/02/19

TITLE: CRIMP TERMINAL, FEMALE .062 DIA. FOR 18-24 AWG WIRE

molex MOLEX INCORPORATED

MATERIAL NO. SEE CHART | DOCUMENT NO. SD-1561-* | SHEET NO. 1 OF 1

THIS DRAWING CONTAINS INFORMATION THAT IS PROPRIETARY TO MOLEX INCORPORATED AND SHOULD NOT BE USED WITHOUT WRITTEN PERMISSION

C

tb_frame_C_P_ME_T
Rev. C 2002/05/05

НИОКР СИСТЕМС

ООО «НИОКРсистемс» - это оперативные поставки широкого спектра электронных компонентов отечественного и импортного производства напрямую от производителей и с крупнейших мировых складов. Реализуемая нашей компанией продукция насчитывает более полумиллиона наименований.

Благодаря этому наша компания предлагает к поставке практически не ограниченный ассортимент компонентов как оптовыми, мелкооптовыми партиями, так и в розницу.

Благодаря развитой сети поставщиков, помогаем в поиске и приобретении экзотичных или снятых с производства компонентов.

Наша компания это:

- Гарантия качества поставляемой продукции
- Широкий ассортимент
- Минимальные сроки поставок
- Техническая поддержка
- Подбор комплектации
- Индивидуальный подход
- Гибкое ценообразование
- Работаем по 275 ФЗ

ООО «НИОКР СИТЕМС»
Москва, 125362, Россия, ул. Вишневая, д. 9, к. 1, Блок 104 а и 104 в

Телефон: 8 (495) 268-14-82
Email: n@nsistems.ru

ИНН: 7735154786
ОГРН: 1167746717709