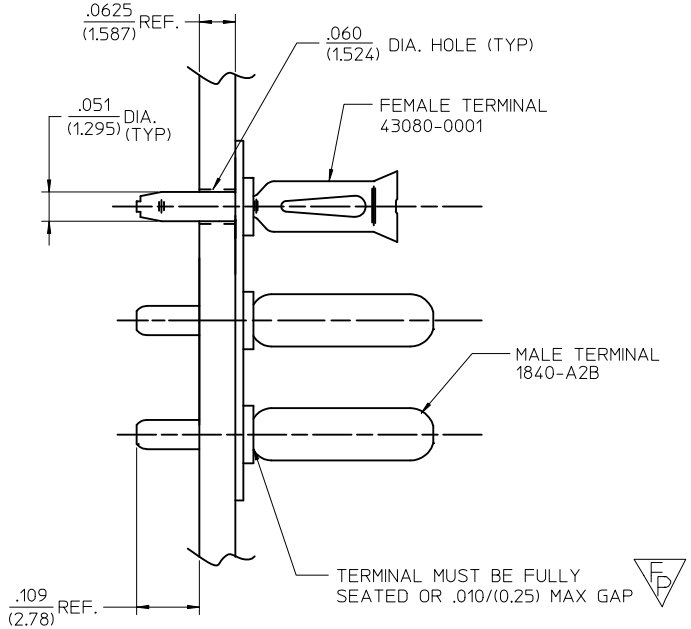
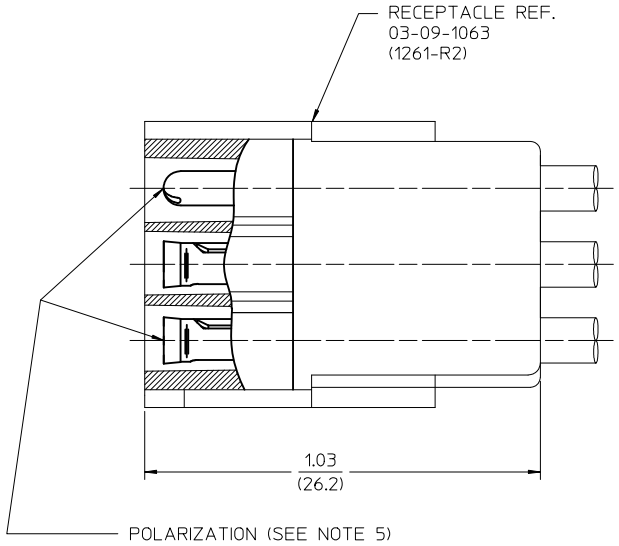
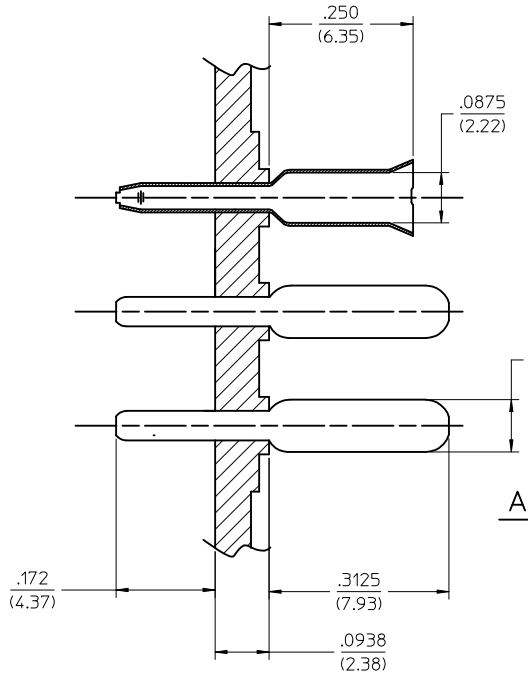
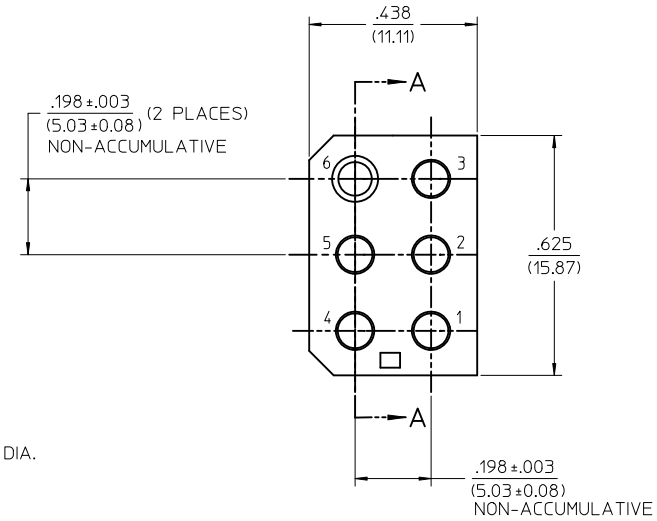
PART NO.	ENGINEERING NO.	TERMINAL PATTERN					
		1	2	3	4	5	6
09-18-5061	A-1840-6-4	M	M	M	M	M	F
09-18-5062	A-1840-6-5	M	M	M	M	F	M
09-18-5064	A-1840-6-6	M	M	M	F	M	M
09-18-5069	A-1840-6-10	F	M	M	M	M	M







SECTION "A-A"



SCALE: 4:1

A-1840-6-4 SHOWN

1. MATERIAL:
   BASE AND RECEPTACLE: NYLON PA66 PER 68200-0037, UL94V-2.
   COLOR: NATURAL
   TERMINALS: MALE - C26000 ALLOY BRASS
   FEMALE - C51000 PHOS. BRONZE
2. FINISH:
   999 - UNPLATED
   102 - (MALE TERMINALS ONLY)
   .000200/0.00508 MIN. TIN OVER
   .000100/0.00254 MIN. COPPER
   126 - (FEMALE TERMINALS ONLY)
   .000050/0.00127 MIN. TIN
   .000050/0.00127 MIN. NICKEL
3. PRODUCT SPECIFICATION: N/A
4. PACKAGING SPECIFICATION: N/A
5. POLARIZATION ACCOMPLISHED THROUGH AN INTER-MIX OF MALE AND FEMALE TERMINALS. (MOLEX .093 TERMINALS)
6. TERMINAL PATTERN CODE:
   M = MALE TERMINALS
   F = FEMALE TERMINALS
   B = NO TERMINALS

REL/REV PART NO'S
EC NO: UCP2004-2212 2004/06/18
DRWN:RHOLTS
CHKD:FSMITH
APPR:FSMITH 2011/09/14
DESCRIPTION
A
REV

QUALITY SYMBOLS
F =0
F =0
P =1

GENERAL TOLERANCES (UNLESS SPECIFIED)

	mm	INCH
4 PLACES	± ---	± ---
3 PLACES	± ---	± .005
2 PLACES	± 0.13	± .010
1 PLACE	± 0.25	± ---
ANGULAR ±1/2°		

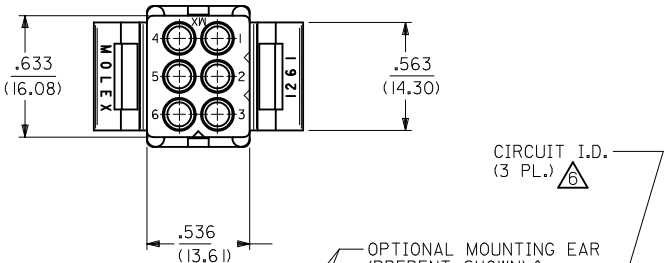
DRAFT WHERE APPLICABLE MUST REMAIN WITHIN DIMENSIONS

DIMENSION STYLE: IN/MM
SCALE: 6:1
DESIGN UNITS: INCH
THIRD ANGLE PROJECTION

DRAWN BY: EWC DATE: 1974/04/30
CHECKED BY: DATE:
APPROVED BY: FSMITH DATE: 2011/09/14
MATERIAL NO.: SEE CHART
SIZE: C

TITLE: CONNECTOR PC BOARD WAFERCON 6 CIRCUIT
MOLEX INCORPORATED
DOCUMENT NO.: 1840-6-*
SHEET NO.: 1 OF 1

THIS DRAWING CONTAINS INFORMATION THAT IS PROPRIETARY TO MOLEX INCORPORATED AND SHOULD NOT BE USED WITHOUT WRITTEN PERMISSION


.633
(16.08)
.563
(14.30)
.536
(13.61)
CIRCUIT I.D.
(3 PL.)
6
OPTIONAL MOUNTING EAR
(PREBENT SHOWN) &
RIB, SEE DETAIL 3 & 4
1.00
(25.4)
.422
(10.72)

MOLEX

MOLEX
1261

PLUG	
PART NO.	ENG. NO.
03-09-2061	1261-P ⚠7
23-09-2061	1261-P-100
03-09-2062	1261-P1
23-09-2062	1261-P1-100
03-09-7061	1261-PBK ⚠7
03-09-7062	1261-P1BK
27-09-2093	1261-P1-200

RECEPTACLE	
PART NO.	ENG. NO.
03-09-1061	1261-R
23-09-1061	1261-R-100
03-09-1062	1261-R1
23-09-1062	1261-R1-100
03-09-1063	1261-R2
23-09-1063	1261-R2-100
03-09-1064	1261-R3
27-09-1063	1261-R2-200
03-09-6064	1261-R3BK
03-09-6063	1261-R2BK
03-09-6062	1261-R1BK
03-09-6061	1261-RBK

LEGEND: PLUG

1261-P***-***

P = PLUG

BLANK = PLUG WITH PREBENT MOUNTING EARS

1 = PLUG WITHOUT MOUNTING EARS

COLOR: BLANK=NATURAL COLOR

AM=AMBER BK=BLACK BU=BLUE

BN=BROWN GY=GRAY GN=GREEN

OR=ORANGE RD=RED YW=YELLOW

MATERIAL: BLANK = NYLON 6/6, U.L. 94V-2

100 = POLYPROPYLENE, U.L. 94V-0

200 = NYLON 6/6, U.L. 94V-0, RED

LEGEND: RECEPTACLE

1261-R***-***

R = RECEPTACLE

BLANK = WITH STD. MOUNTING EARS, WITH LOCK RAMPS

1 = WITH STD. MOUNTING EARS, WITHOUT LOCK RAMPS

2 = WITHOUT MOUNTING EARS, WITHOUT LOCK RAMPS

3 = WITHOUT MOUNTING EARS, WITH LOCK RAMPS

4 = WITH PREBENT MOUNTING EARS, WITH LOCK RAMPS

5 = WITH PREBENT MOUNTING EARS, WITHOUT LOCK RAMPS

COLOR: BLANK=NATURAL COLOR

AM=AMBER BK=BLACK BU=BLUE

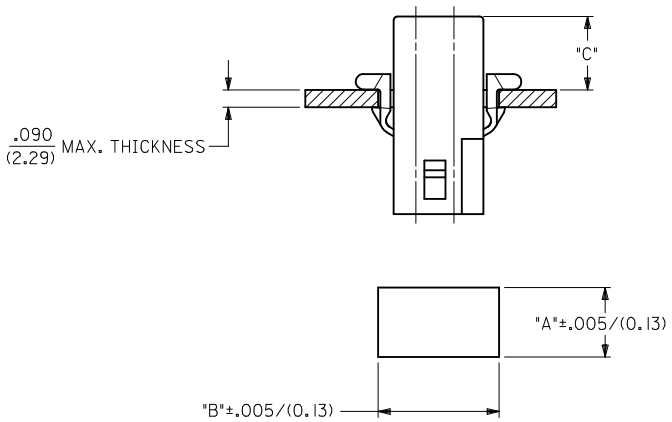
BN=BROWN GY=GRAY GN=GREEN

OR=ORANGE RD=RED YW=YELLOW

MATERIAL: BLANK = NYLON 6/6, U.L. 94V-2

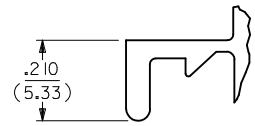
100 = POLYPROPYLENE, U.L. 94V-0

200 = NYLON 6/6, U.L. 94V-0, RED



MOUNTING HOLE CUTOUT

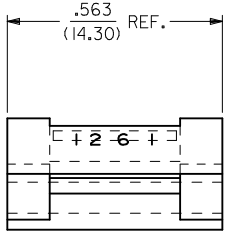
HOUSING	DIM. "A"	DIM. "B"	DIM. "C" (STD. EAR)	DIM. "C" (PREBENT)
PLUG	.750/(19.05)	.695/(17.65)	.39/(9.9)	.40/(10.1)
RECEPTACLE	.718/(18.24)	.600/(15.24)	.40/(10.1)	.41/(10.3)

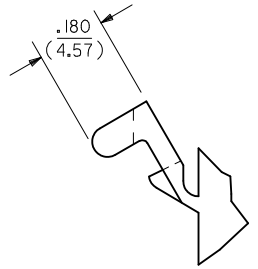


DETAIL 3

.093/(2.36) STANDARD MOUNTING EAR

(SCALE 4:1)





DETAIL 4

.093/(2.36)PREBENT MOUNTING EAR

(SCALE 4:1)

NOTES:

1. MATERIAL: SEE LEGEND
2. FINISH: NONE.
3. PROCUCT SPECIFICATION: PS-43660-9999
4. PACKAGING INFORMATION: PK-1261-001
5. HOUSINGS FOR USE WITH MOLEX .093/(2.36) PIN AND SOCKET TERMINALS.
6. ⚠6 CIRCUIT I.D. NUMBERS ON SIDE OF HOUSING APPEAR ON PARTS FROM TOOLS BUILT AFTER 9/3/91.
7. ⚠7 WHERE DENOTED IN CHART, TOOLS ARE BUILT WITH PREBENT MOUNTING EARS PER DETAIL 4 AND SUPERSEDE ALL TOOLS PREVIOUSLY BUILT WITH THE STANDARD MOUNTING EAR.
8. TEXT AND CIRCUIT IDENTIFIERS ARE SHOWN IN APPROXIMATE LOCATION BUT MAY VARY TO ACCOMODATE TOOLING.

DEL. UV MAT'L & P/N
EC NO: UCP2011-1525 2010/11/23
DRWN:AELHAG 2010/11/24
CHKD:JBELL
APPR:FSMITH 2010/12/03
DESCRIPTION
X4
REV

QUALITY SYMBOLS
▼=0
Ⓒ▽=0

GENERAL TOLERANCES (UNLESS SPECIFIED)

	mm	INCH
4 PLACES	± ---	± ---
3 PLACES	± ---	± .007
2 PLACES	± 0.18	± .010
1 PLACE	± 0.25	± ---
ANGULAR ± 2 °		

DRAFT WHERE APPLICABLE MUST REMAIN WITHIN DIMENSIONS

DIMENSION STYLE: IN/MM

SCALE: 4:1

DESIGN UNITS: INCH

THIRD ANGLE PROJECTION

DRAWN BY: AELHAG DATE: 2010/11/23

CHECKED BY: JBELL DATE: 2010/11/24

APPROVED BY: FSMITH DATE: 2010/12/03

TITLE: .093(2.36) HOUSING, PLUG AND RECEPTACLE, 6 CKT., .198/(5.03)CTRS.

molex MOLEX INCORPORATED

MATERIAL NO.: SEE CHART

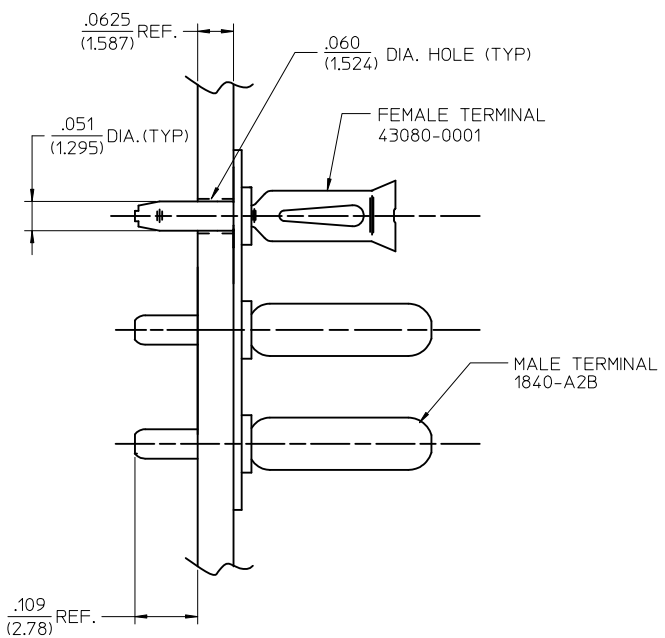
DOCUMENT NO.: SD-1261-*

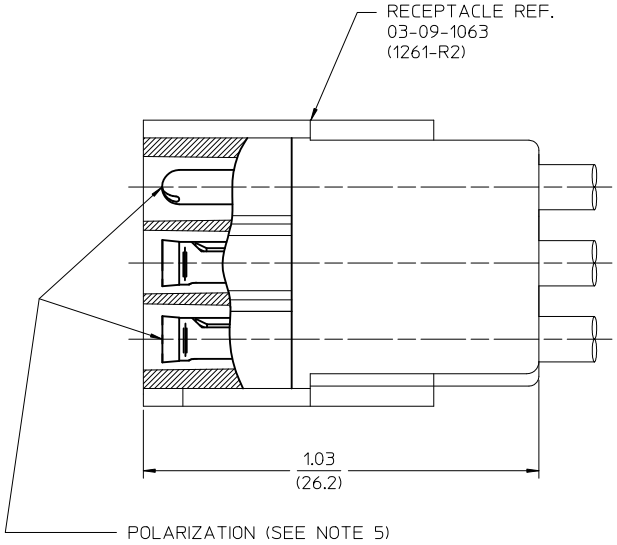
SHEET NO.: 2 OF 2

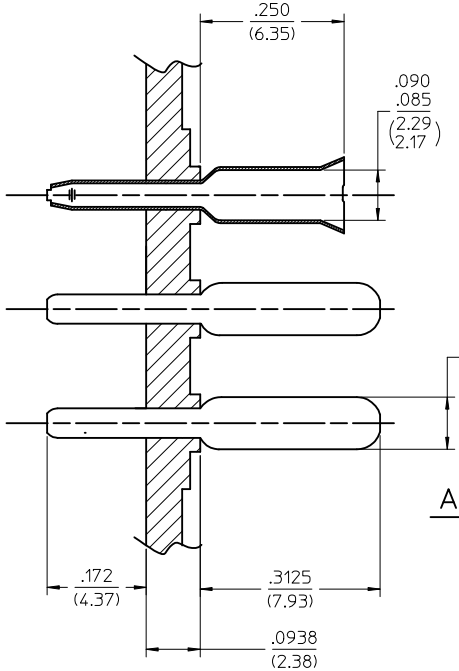
SIZE C

THIS DRAWING CONTAINS INFORMATION THAT IS PROPRIETARY TO MOLEX INCORPORATED AND SHOULD NOT BE USED WITHOUT WRITTEN PERMISSION

PART NO.	ENGINEERING NO.	TERMINAL PATTERN					
		1	2	3	4	5	6
09-18-5061	A-1840-6-4	M	M	M	M	M	F
09-18-5062	A-1840-6-5	M	M	M	M	F	M
09-18-5064	A-1840-6-6	M	M	M	F	M	M
09-18-5069	A-1840-6-10	F	M	M	M	M	M

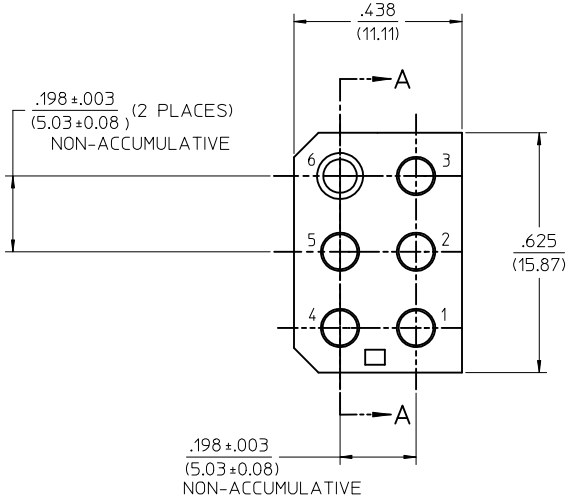






SECTION "A-A"

A-1840-6-4 SHOWN



SCALE: 4:1

NOTES:
1. MATERIAL:
   BASE AND RECEPTACLE: NYLON PA66, UL94V-0, COLOR: NATURAL
   TERMINALS: MALE - BRASS ALLOY
   FEMALE - PHOSPHOR BRONZE ALLOY
2. FINISH:
   MALE TERMINALS: .000200/0.00508 MIN. TIN OVER
   .000100/0.00254 MIN. COPPER
   FEMALE TERMINALS: .000050/0.00127 MIN. TIN OVER
   .000050/0.00127 MIN. NICKEL
3. PRODUCT SPECIFICATION: N/A
4. PACKAGING SPECIFICATION: N/A
5. POLARIZATION ACCOMPLISHED THROUGH AN INTER-MIX OF MALE AND FEMALE TERMINALS. (MOLEX .093 TERMINALS)
6. TERMINAL PATTERN CODE:
   A.) M = MALE TERMINALS
   B.) F = FEMALE TERMINALS
   C.) B = NO TERMINALS
7. PARTS TO BE MOUNTED ON SUPPORTED EDGE OF P.C. BOARD.

REL/REV PART NO'S
EC NO: UCP2004-2212 2010/12/09
DRWN: CSTEWART
CHK'D:
APPR: FSMITH 2011/09/14
DESCRIPTION
A
REV

QUALITY SYMBOLS
F =0
F =0
F =0

GENERAL TOLERANCES (UNLESS SPECIFIED)

	mm	INCH
4 PLACES	± ---	± ---
3 PLACES	± ---	± .005
2 PLACES	± 0.13	± .010
1 PLACE	± 0.25	± ---
ANGULAR ±1/2°		

DRAFT WHERE APPLICABLE MUST REMAIN WITHIN DIMENSIONS

DIMENSION STYLE: IN/MM
SCALE: 6:1
DESIGN UNITS: INCH
THIRD ANGLE PROJECTION

DRAWN BY: CSTEWART DATE: 2010/12/09
CHECKED BY: DATE:
APPROVED BY: FSMITH DATE: 2011/09/14
MATERIAL NO.: SEE CHART

TITLE
CONNECTOR
PC BOARD WAFERCON
6 CIRCUIT
MOLEX INCORPORATED
DOCUMENT NO.: SDA-1840-6-*
SHEET NO.: 1 OF 1
SIZE: C

THIS DRAWING CONTAINS INFORMATION THAT IS PROPRIETARY TO MOLEX INCORPORATED AND SHOULD NOT BE USED WITHOUT WRITTEN PERMISSION

ООО «НИОКРсистемс» - это оперативные поставки широкого спектра электронных компонентов отечественного и импортного производства напрямую от производителей и с крупнейших мировых складов. Реализуемая нашей компанией продукция насчитывает более полумиллиона наименований.

Благодаря этому наша компания предлагает к поставке практически не ограниченный ассортимент компонентов как оптовыми, мелкооптовыми партиями, так и в розницу.

Благодаря развитой сети поставщиков, помогаем в поиске и приобретении экзотичных или снятых с производства компонентов.

Наша компания это:

- Гарантия качества поставляемой продукции
- Широкий ассортимент
- Минимальные сроки поставок
- Техническая поддержка
- Подбор комплектации
- Индивидуальный подход
- Гибкое ценообразование
- Работаем по 275 ФЗ

ООО «НИОКР СИТЕМС»
Москва, 125362, Россия, ул. Вишневая, д. 9, к. 1, Блок 104 а и 104 в

Телефон: 8 (495) 268-14-82
Email: n@nsistems.ru

ИНН: 7735154786
ОГРН: 1167746717709