74HC245; 74HCT245

Octal bus tranceiver; 3-state

Rev. 03 — 31 January 2005 Product data sheet

1. General description

The 74HC245; 74HCT245 is a high-speed Si-gate CMOS device and is pin compatible with Low-Power Schottky TTL (LSTTL).

The 74HC245; 74HCT245 is an octal transceiver featuring non-inverting 3-state bus compatible outputs in both send and receive directions. The 74HC245; 74HCT245 features an output enable input ($\overline{OE}$) for easy cascading and a send/receive input (DIR) for direction control. $\overline{OE}$ controls the outputs so that the buses are effectively isolated.

The 74HC245; 74HCT245 is similar to the 74HC640; 74HCT640 but has true (non-inverting) outputs.

2. Features

- Octal bidirectional bus interface
- Non-inverting 3-state outputs
- Multiple package options
- Complies with JEDEC standard no. 7A
- ESD protection:
  - HBM EIA/JESD22-A114-B exceeds 2000 V
  - MM EIA/JESD22-A115-A exceeds 200 V
- Specified from –40 °C to +85 °C and from –40 °C to +125 °C

3. Quick reference data

Table 1: Quick reference data

GND = 0 V; T_{amb} = 25 °C; $t_r = t_f$ = 6 ns.

Symbol	Parameter	Conditions		Min	Typ	Max	Unit
Type 74HC245							
t_{PHL}, t_{PLH}	propagation delay An to Bn or Bn to An	C_L = 15 pF; V_{CC} = 5 V		-	7	-	ns
C_I	input capacitance			-	3.5	-	pF
$C_{I/O}$	input/output capacitance			-	10	-	pF
C_{PD}	power dissipation capacitance per transceiver	V_I = GND to V_{CC}	[1]	-	30	-	pF
Type 74HCT245							
t_{PHL}, t_{PLH}	propagation delay An to Bn or Bn to An	C_L = 15 pF; V_{CC} = 5 V		-	10	-	ns

PHILIPS

Table 1: Quick reference data *...continued*

GND = 0 V; T_{amb} = 25 °C; $t_r = t_f$ = 6 ns.

Symbol	Parameter	Conditions		Min	Typ	Max	Unit
C_I	input capacitance			-	3.5	-	pF
$C_{I/O}$	input/output capacitance			-	10	-	pF
C_{PD}	power dissipation capacitance per transceiver	V_I = GND to V_{CC} – 1.5 V	[1]	-	30	-	pF

[1] C_{PD} is used to determine the dynamic power dissipation (P_D in µW):

$P_D = C_{PD} \times V_{CC}^2 \times f_i \times N + \Sigma (C_L \times V_{CC}^2 \times f_o)$ where:

f_i = input frequency in MHz;

f_o = output frequency in MHz;

C_L = output load capacitance in pF;

V_{CC} = supply voltage in V;

N = number of inputs switching;

$\Sigma (C_L \times V_{CC}^2 \times f_o)$ = sum of outputs.

4. Ordering information

Table 2: Ordering information

Type number	Package			
	Temperature range	Name	Description	Version
74HC245N	–40 °C to +125 °C	DIP20	plastic dual in-line package; 20 leads (300 mil)	SOT146-1
74HC245D	–40 °C to +125 °C	SO20	plastic small outline package; 20 leads; body width 7.5 mm	SOT163-1
74HC245PW	–40 °C to +125 °C	TSSOP20	plastic thin shrink small outline package; 20 leads; body width 4.4 mm	SOT360-1
74HC245DB	–40 °C to +125 °C	SSOP20	plastic shrink small outline package; 20 leads; body width 5.3 mm	SOT339-1
74HC245BQ	–40 °C to +125 °C	DHVQFN20	plastic dual-in-line compatible thermal enhanced very thin quad flat package no leads; 20 terminals; body 2.5 × 4.5 × 0.85 mm	SOT764-1
74HCT245N	–40 °C to +125 °C	DIP20	plastic dual in-line package; 20 leads (300 mil)	SOT146-1
74HCT245D	–40 °C to +125 °C	SO20	plastic small outline package; 20 leads; body width 7.5 mm	SOT163-1
74HCT245PW	–40 °C to +125 °C	TSSOP20	plastic thin shrink small outline package; 20 leads; body width 4.4 mm	SOT360-1
74HCT245DB	–40 °C to +125 °C	SSOP20	plastic shrink small outline package; 20 leads; body width 5.3 mm	SOT339-1
74HCT245BQ	–40 °C to +125 °C	DHVQFN20	plastic dual-in-line compatible thermal enhanced very thin quad flat package no leads; 20 terminals; body 2.5 × 4.5 × 0.85 mm	SOT764-1

© Koninklijke Philips Electronics N.V. 2005. All rights reserved.

5. Functional diagram

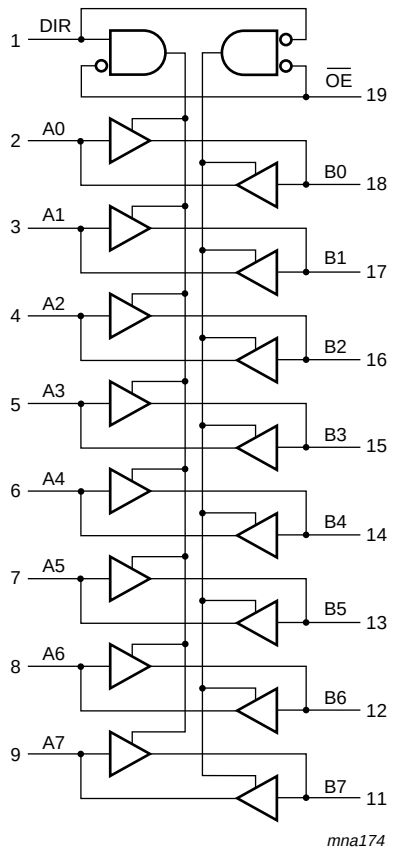

Fig 1. Logic symbol

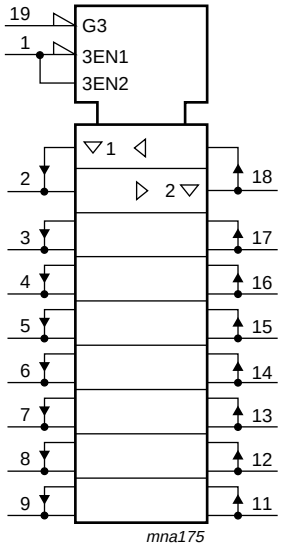

Fig 2. IEC logic symbol

© Koninklijke Philips Electronics N.V. 2005. All rights reserved.

6. Pinning information

6.1 Pinning

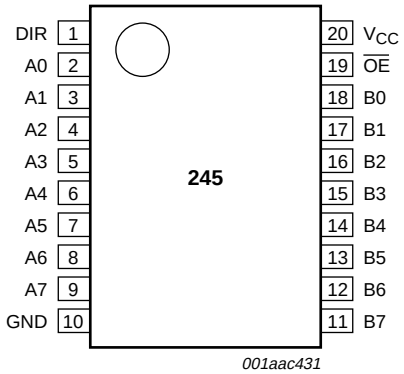

Fig 3. Pin configuration DIP20, SO20, SSOP20 and TSSOP20

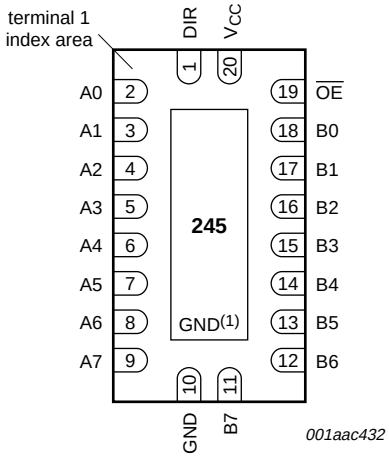

Transparent top view

(1) The die substrate is attached to this pad using conductive die attach material. It can not be used as supply pin or input

Fig 4. Pin configuration DHVQFN20

6.2 Pin description

Table 3: Pin description

Symbol	Pin	Description
DIR	1	direction control
A0	2	data input/output
A1	3	data input/output
A2	4	data input/output
A3	5	data input/output
A4	6	data input/output
A5	7	data input/output
A6	8	data input/output
A7	9	data input/output
GND	10	ground (0 V)
B7	11	data input/output
B6	12	data input/output
B5	13	data input/output
B4	14	data input/output
B3	15	data input/output
B2	16	data input/output

© Koninklijke Philips Electronics N.V. 2005. All rights reserved.

Table 3: Pin description *...continued*

Symbol	Pin	Description
B1	17	data input/output
B0	18	data input/output
$\overline{OE}$	19	output enable input (active LOW)
V_{CC}	20	supply voltage

7. Functional description

7.1 Function table

Table 4: Function table [1]

Input		Input/output	
$\overline{OE}$	DIR	An	Bn
L	L	A = B	input
L	H	input	B = A
H	X	Z	Z

[1] H = HIGH voltage level;
L = LOW voltage level;
X = don't care;
Z = high-impedance OFF-state.

8. Limiting values

Table 5: Limiting values

In accordance with the Absolute Maximum Rating System (IEC 60134). Voltages are referenced to GND (ground = 0 V).

Symbol	Parameter	Conditions	Min	Max	Unit
V_{CC}	supply voltage		–0.5	+7	V
I_{IK}	input diode current	$V_I < -0.5$ V or $V_I > V_{CC} + 0.5$ V	-	±20	mA
I_{OK}	output diode current	$V_O < -0.5$ V or $V_O > V_{CC} + 0.5$ V	-	±20	mA
I_O	output source or sink current	$V_O = -0.5$ V to $V_{CC} + 0.5$ V	-	±35	mA
I_{CC}, I_{GND}	V_{CC} or GND current		-	±70	mA
T_{stg}	storage temperature		–65	+150	°C
P_{tot}	total power dissipation	[1]			
	DIP20 package		-	750	mW
	SO20, SSOP20, TSSOP20 and DHVQFN20 packages		-	500	mW

[1] For DIP20 packages: above 70 °C, P_{tot} derates linearly with 12 mW/K.
For SO20 packages: above 70 °C, P_{tot} derates linearly with 8 mW/K.
For SSOP20 and TSSOP20 packages: above 60 °C, P_{tot} derates linearly with 5.5 mW/K.
For DHVQFN20 packages: above 60 °C, P_{tot} derates linearly with 4.5 mW/K.

© Koninklijke Philips Electronics N.V. 2005. All rights reserved.

9. Recommended operating conditions

Table 6: Recommended operating conditions

Symbol	Parameter	Conditions	Min	Typ	Max	Unit
Type 74HC245						
V_{CC}	supply voltage		2.0	5.0	6.0	V
V_I	input voltage		0	-	V_{CC}	V
V_O	output voltage		0	-	V_{CC}	V
t_r, t_f	input rise and fall times	V_{CC} = 2.0 V	-	-	1000	ns
		V_{CC} = 4.5 V	-	6.0	500	ns
		V_{CC} = 6.0 V	-	-	400	ns
T_{amb}	ambient temperature		–40	-	+125	°C
Type 74HCT245						
V_{CC}	supply voltage		4.5	5.0	5.5	V
V_I	input voltage		0	-	V_{CC}	V
V_O	output voltage		0	-	V_{CC}	V
t_r, t_f	input rise and fall times	V_{CC} = 4.5 V	-	6.0	500	ns
T_{amb}	ambient temperature		–40	-	+125	°C

10. Static characteristics

Table 7: Static characteristics type 74HC245

At recommended operating conditions; voltages are referenced to GND (ground = 0 V).

Symbol	Parameter	Conditions	Min	Typ	Max	Unit
T_{amb} = 25 °C						
V_{IH}	HIGH-level input voltage	V_{CC} = 2.0 V	1.5	1.2	-	V
		V_{CC} = 4.5 V	3.15	2.4	-	V
		V_{CC} = 6.0 V	4.2	3.2	-	V
V_{IL}	LOW-level input voltage	V_{CC} = 2.0 V	-	0.8	0.5	V
		V_{CC} = 4.5 V	-	2.1	1.35	V
		V_{CC} = 6.0 V	-	2.8	1.8	V
V_{OH}	HIGH-level output voltage	$V_I = V_{IH}$ or V_{IL}				
		I_O = –20 μA; V_{CC} = 2.0 V	1.9	2.0	-	V
		I_O = –20 μA; V_{CC} = 4.5 V	4.4	4.5	-	V
		I_O = –20 μA; V_{CC} = 6.0 V	5.9	6.0	-	V
		I_O = –6.0 mA; V_{CC} = 4.5 V	3.98	4.32	-	V
		I_O = –7.8 mA; V_{CC} = 6.0 V	5.48	5.81	-	V

© Koninklijke Philips Electronics N.V. 2005. All rights reserved.

Table 7: Static characteristics type 74HC245 *...continued*

At recommended operating conditions; voltages are referenced to GND (ground = 0 V).

Symbol	Parameter	Conditions	Min	Typ	Max	Unit
V_{OL}	LOW-level output voltage	$V_I = V_{IH}$ or V_{IL}				
		I_O = 20 µA; V_{CC} = 2.0 V	-	0	0.1	V
		I_O = 20 µA; V_{CC} = 4.5 V	-	0	0.1	V
		I_O = 20 µA; V_{CC} = 6.0 V	-	0	0.1	V
		I_O = 6.0 mA; V_{CC} = 4.5 V	-	0.15	0.26	V
		I_O = 7.8 mA; V_{CC} = 6.0 V	-	0.16	0.26	V
I_{LI}	input leakage current	$V_I = V_{CC}$ or GND; V_{CC} = 6.0 V	-	-	±0.1	µA
I_{OZ}	OFF-state output current	$V_I = V_{IH}$ or V_{IL}; $V_O = V_{CC}$ or GND; V_{CC} = 6.0 V	-	-	±0.5	µA
I_{CC}	quiescent supply current	$V_I = V_{CC}$ or GND; I_O = 0 A; V_{CC} = 6.0 V	-	-	8.0	µA
C_I	input capacitance		-	3.5	-	pF
$C_{I/O}$	input/output capacitance		-	10	-	pF
T_{amb} = −40 °C to +85 °C						
V_{IH}	HIGH-level input voltage	V_{CC} = 2.0 V	1.5	-	-	V
		V_{CC} = 4.5 V	3.15	-	-	V
		V_{CC} = 6.0 V	4.2	-	-	V
V_{IL}	LOW-level input voltage	V_{CC} = 2.0 V	-	-	0.5	V
		V_{CC} = 4.5 V	-	-	1.35	V
		V_{CC} = 6.0 V	-	-	1.8	V
V_{OH}	HIGH-level output voltage	$V_I = V_{IH}$ or V_{IL}				
		I_O = −20 µA; V_{CC} = 2.0 V	1.9	-	-	V
		I_O = −20 µA; V_{CC} = 4.5 V	4.4	-	-	V
		I_O = −20 µA; V_{CC} = 6.0 V	5.9	-	-	V
		I_O = −6.0 mA; V_{CC} = 4.5 V	3.84	-	-	V
		I_O = −7.8 mA; V_{CC} = 6.0 V	5.34	-	-	V
V_{OL}	LOW-level output voltage	$V_I = V_{IH}$ or V_{IL}				
		I_O = 20 µA; V_{CC} = 2.0 V	-	-	0.1	V
		I_O = 20 µA; V_{CC} = 4.5 V	-	-	0.1	V
		I_O = 20 µA; V_{CC} = 6.0 V	-	-	0.1	V
		I_O = 6.0 mA; V_{CC} = 4.5 V	-	-	0.33	V
		I_O = 7.8 mA; V_{CC} = 6.0 V	-	-	0.33	V
I_{LI}	input leakage current	$V_I = V_{CC}$ or GND; V_{CC} = 6.0 V	-	-	±1.0	µA
I_{OZ}	OFF-state output current	$V_I = V_{IH}$ or V_{IL}; $V_O = V_{CC}$ or GND; V_{CC} = 6.0 V	-	-	±5.0	µA
I_{CC}	quiescent supply current	$V_I = V_{CC}$ or GND; I_O = 0 A; V_{CC} = 6.0 V	-	-	80	µA
T_{amb} = −40 °C to +125 °C						
V_{IH}	HIGH-level input voltage	V_{CC} = 2.0 V	1.5	-	-	V
		V_{CC} = 4.5 V	3.15	-	-	V
		V_{CC} = 6.0 V	4.2	-	-	V

© Koninklijke Philips Electronics N.V. 2005. All rights reserved.

Table 7: Static characteristics type 74HC245 *...continued*

At recommended operating conditions; voltages are referenced to GND (ground = 0 V).

Symbol	Parameter	Conditions	Min	Typ	Max	Unit
V_{IL}	LOW-level input voltage	V_{CC} = 2.0 V	-	-	0.5	V
		V_{CC} = 4.5 V	-	-	1.35	V
		V_{CC} = 6.0 V	-	-	1.8	V
V_{OH}	HIGH-level output voltage	$V_I = V_{IH}$ or V_{IL}		-		
		I_O = –20 μA; V_{CC} = 2.0 V	1.9	-	-	V
		I_O = –20 μA; V_{CC} = 4.5 V	4.4	-	-	V
		I_O = –20 μA; V_{CC} = 6.0 V	5.9	-	-	V
		I_O = –6.0 mA; V_{CC} = 4.5 V	3.7	-	-	V
		I_O = –7.8 mA; V_{CC} = 6.0 V	5.2	-	-	V
V_{OL}	LOW-level output voltage	$V_I = V_{IH}$ or V_{IL}		-		
		I_O = 20 μA; V_{CC} = 2.0 V	-	-	0.1	V
		I_O = 20 μA; V_{CC} = 4.5 V	-	-	0.1	V
		I_O = 20 μA; V_{CC} = 6.0 V	-	-	0.1	V
		I_O = 6.0 mA; V_{CC} = 4.5 V	-	-	0.4	V
		I_O = 7.8 mA; V_{CC} = 6.0 V	-	-	0.4	V
I_{LI}	input leakage current	$V_I = V_{CC}$ or GND; V_{CC} = 6.0 V	-	-	±1.0	μA
I_{OZ}	OFF-state output current	$V_I = V_{IH}$ or V_{IL}; $V_O = V_{CC}$ or GND; V_{CC} = 6.0 V	-	-	±10.0	μA
I_{CC}	quiescent supply current	$V_I = V_{CC}$ or GND; I_O = 0 A; V_{CC} = 6.0 V	-	-	160	μA

Table 8: Static characteristics type 74HCT245

At recommended operating conditions; voltages are referenced to GND (ground = 0 V).

Symbol	Parameter	Conditions	Min	Typ	Max	Unit
T_{amb} = 25 °C						
V_{IH}	HIGH-level input voltage	V_{CC} = 4.5 V to 5.5 V	2.0	1.6	-	V
V_{IL}	LOW-level input voltage	V_{CC} = 4.5 V to 5.5 V	-	1.2	0.8	V
V_{OH}	HIGH-level output voltage	$V_I = V_{IH}$ or V_{IL}; V_{CC} = 4.5 V				
		I_O = –20 μA	4.4	4.5	-	V
		I_O = –6 mA	3.98	4.32	-	V
V_{OL}	LOW-level output voltage	$V_I = V_{IH}$ or V_{IL}; V_{CC} = 4.5 V				
		I_O = 20 μA	-	0	0.1	V
		I_O = 6.0 mA	-	0.15	0.26	V
I_{LI}	input leakage current	$V_I = V_{CC}$ or GND; V_{CC} = 5.5 V	-	-	±0.1	μA
I_{OZ}	OFF-state output current	$V_I = V_{IH}$ or V_{IL}; V_{CC} = 5.5 V; $V_O = V_{CC}$ or GND per input pin; other inputs at V_{CC} or GND; I_O = 0 A	-	-	±0.5	μA
I_{CC}	quiescent supply current	$V_I = V_{CC}$ or GND; I_O = 0 A; V_{CC} = 5.5 V	-	-	8.0	μA

© Koninklijke Philips Electronics N.V. 2005. All rights reserved.

Table 8: Static characteristics type 74HCT245 *...continued*

At recommended operating conditions; voltages are referenced to GND (ground = 0 V).

Symbol	Parameter	Conditions	Min	Typ	Max	Unit
ΔI_{CC}	additional quiescent supply current per input pin	$V_I = V_{CC} - 2.1$ V; other inputs at $V_I = V_{CC}$ or GND; $V_{CC} = 4.5$ V to 5.5 V; $I_O = 0$ A				
	An or Bn inputs		-	40	144	µA
	$\overline{OE}$ input		-	150	540	µA
	DIR input		-	90	324	µA
C_I	input capacitance		-	3.5	-	pF
$C_{I/O}$	input/output capacitance		-	10	-	pF
T_{amb} = –40 °C to +85 °C						
V_{IH}	HIGH-level input voltage	$V_{CC} = 4.5$ V to 5.5 V	2.0	-	-	V
V_{IL}	LOW-level input voltage	$V_{CC} = 4.5$ V to 5.5 V	-	-	0.8	V
V_{OH}	HIGH-level output voltage	$V_I = V_{IH}$ or V_{IL}; $V_{CC} = 4.5$ V				
		$I_O = -20$ µA	4.4	-	-	V
		$I_O = -6$ mA	3.84	-	-	V
V_{OL}	LOW-level output voltage	$V_I = V_{IH}$ or V_{IL}; $V_{CC} = 4.5$ V				
		$I_O = 20$ µA	-	-	0.1	V
		$I_O = 6.0$ mA	-	-	0.33	V
I_{LI}	input leakage current	$V_I = V_{CC}$ or GND; $V_{CC} = 5.5$ V	-	-	±1.0	µA
I_{OZ}	OFF-state output current	$V_I = V_{IH}$ or V_{IL}; $V_{CC} = 5.5$ V; $V_O = V_{CC}$ or GND per input pin; other inputs at V_{CC} or GND; $I_O = 0$ A	-	-	±5.0	µA
I_{CC}	quiescent supply current	$V_I = V_{CC}$ or GND; $I_O = 0$ A; $V_{CC} = 5.5$ V	-	-	80	µA
ΔI_{CC}	additional quiescent supply current per input pin	$V_I = V_{CC} - 2.1$ V; other inputs at $V_I = V_{CC}$ or GND; $V_{CC} = 4.5$ V to 5.5 V; $I_O = 0$ A				
	An or Bn inputs		-	-	180	µA
	$\overline{OE}$ input		-	-	675	µA
	DIR input		-	-	405	µA
T_{amb} = –40 °C to +125 °C						
V_{IH}	HIGH-level input voltage	$V_{CC} = 4.5$ V to 5.5 V	2.0	-	-	V
V_{IL}	LOW-level input voltage	$V_{CC} = 4.5$ V to 5.5 V	-	-	0.8	V
V_{OH}	HIGH-level output voltage	$V_I = V_{IH}$ or V_{IL}; $V_{CC} = 4.5$ V				
		$I_O = -20$ µA	4.4	-	-	V
		$I_O = -6$ mA	3.7	-	-	V
V_{OL}	LOW-level output voltage	$V_I = V_{IH}$ or V_{IL}; $V_{CC} = 4.5$ V				
		$I_O = 20$ µA	-	-	0.1	V
		$I_O = 6.0$ mA	-	-	0.4	V
I_{LI}	input leakage current	$V_I = V_{CC}$ or GND; $V_{CC} = 5.5$ V	-	-	±1.0	µA
I_{OZ}	OFF-state output current	$V_I = V_{IH}$ or V_{IL}; $V_{CC} = 5.5$ V; $V_O = V_{CC}$ or GND per input pin; other inputs at V_{CC} or GND; $I_O = 0$ A	-	-	±10	µA

© Koninklijke Philips Electronics N.V. 2005. All rights reserved.

Table 8: Static characteristics type 74HCT245 *...continued*

At recommended operating conditions; voltages are referenced to GND (ground = 0 V).

Symbol	Parameter	Conditions	Min	Typ	Max	Unit
I_{CC}	quiescent supply current	$V_I = V_{CC}$ or GND; $I_O = 0$ A; $V_{CC} = 5.5$ V	-	-	160	µA
ΔI_{CC}	additional quiescent supply current per input pin	$V_I = V_{CC} - 2.1$ V; other inputs at $V_I = V_{CC}$ or GND; $V_{CC} = 4.5$ V to 5.5 V; $I_O = 0$ A				
	An or Bn inputs		-	-	196	µA
	$\overline{OE}$ input		-	-	735	µA
	DIR input		-	-	441	µA

11. Dynamic characteristics

Table 9: Dynamic characteristics type 74HC245

GND = 0 V; test circuit see Figure 7.

Symbol	Parameter	Conditions		Min	Typ	Max	Unit
T_{amb} = 25 °C							
t_{PHL}, t_{PLH}	propagation delay An to Bn or Bn to An	see Figure 5					
		$V_{CC} = 2.0$ V		-	25	90	ns
		$V_{CC} = 4.5$ V		-	9	18	ns
		$V_{CC} = 5.0$ V; $C_L = 15$ pF		-	7	-	ns
		$V_{CC} = 6.0$ V		-	7	15	ns
t_{PZH}, t_{PZL}	3-state output enable time $\overline{OE}$ to An or $\overline{OE}$ to Bn	see Figure 6					
		$V_{CC} = 2.0$ V		-	30	150	ns
		$V_{CC} = 4.5$ V		-	11	30	ns
		$V_{CC} = 6.0$ V		-	9	26	ns
t_{PHZ}, t_{PLZ}	3-state output disable time $\overline{OE}$ to An or $\overline{OE}$ to Bn	see Figure 6					
		$V_{CC} = 2.0$ V		-	41	150	ns
		$V_{CC} = 4.5$ V		-	15	30	ns
		$V_{CC} = 6.0$ V		-	12	26	ns
t_{THL}, t_{TLH}	output transition time	see Figure 5					
		$V_{CC} = 2.0$ V		-	14	60	ns
		$V_{CC} = 4.5$ V		-	5	12	ns
		$V_{CC} = 6.0$ V		-	4	10	ns
C_{PD}	power dissipation capacitance per transceiver	V_I = GND to V_{CC}	[1]	-	30	-	pF
T_{amb} = −40 °C to +85 °C							
t_{PHL}, t_{PLH}	propagation delay An to Bn or Bn to An	see Figure 5					
		$V_{CC} = 2.0$ V		-	-	115	ns
		$V_{CC} = 4.5$ V		-	-	23	ns
		$V_{CC} = 6.0$ V		-	-	20	ns

© Koninklijke Philips Electronics N.V. 2005. All rights reserved.

Table 9: Dynamic characteristics type 74HC245 *...continued*

GND = 0 V; test circuit see Figure 7.

Symbol	Parameter	Conditions	Min	Typ	Max	Unit
t_{PZH}, t_{PZL}	3-state output enable time $\overline{OE}$ to An or $\overline{OE}$ to Bn	see Figure 6				
		V_{CC} = 2.0 V	-	-	190	ns
		V_{CC} = 4.5 V	-	-	38	ns
		V_{CC} = 6.0 V	-	-	33	ns
t_{PHZ}, t_{PLZ}	3-state output disable time $\overline{OE}$ to An or $\overline{OE}$ to Bn	see Figure 6				
		V_{CC} = 2.0 V	-	-	190	ns
		V_{CC} = 4.5 V	-	-	38	ns
		V_{CC} = 6.0 V	-	-	33	ns
t_{THL}, t_{TLH}	output transition time	see Figure 5				
		V_{CC} = 2.0 V	-	-	75	ns
		V_{CC} = 4.5 V	-	-	15	ns
		V_{CC} = 6.0 V	-	-	13	ns
T_{amb} = −40 °C to +125 °C						
t_{PHL}, t_{PLH}	propagation delay An to Bn or Bn to An	see Figure 5				
		V_{CC} = 2.0 V	-	-	135	ns
		V_{CC} = 4.5 V	-	-	27	ns
		V_{CC} = 6.0 V	-	-	23	ns
t_{PZH}, t_{PZL}	3-state output enable time $\overline{OE}$ to An or $\overline{OE}$ to Bn	see Figure 6				
		V_{CC} = 2.0 V	-	-	225	ns
		V_{CC} = 4.5 V	-	-	45	ns
		V_{CC} = 6.0 V	-	-	38	ns
t_{PHZ}, t_{PLZ}	3-state output disable time $\overline{OE}$ to An or $\overline{OE}$ to Bn	see Figure 6				
		V_{CC} = 2.0 V	-	-	225	ns
		V_{CC} = 4.5 V	-	-	45	ns
		V_{CC} = 6.0 V	-	-	38	ns
t_{THL}, t_{TLH}	output transition time	see Figure 5				
		V_{CC} = 2.0 V	-	-	90	ns
		V_{CC} = 4.5 V	-	-	18	ns
		V_{CC} = 6.0 V	-	-	15	ns

[1] C_{PD} is used to determine the dynamic power dissipation (P_D in μW):

$P_D = C_{PD} \times V_{CC}^2 \times f_i \times N + \Sigma (C_L \times V_{CC}^2 \times f_o)$ where:

f_i = input frequency in MHz;

f_o = output frequency in MHz;

C_L = output load capacitance in pF;

V_{CC} = supply voltage in V;

N = number of inputs switching;

$\Sigma (C_L \times V_{CC}^2 \times f_o)$ = sum of outputs.

© Koninklijke Philips Electronics N.V. 2005. All rights reserved.

Table 10: Dynamic characteristics type 74HCT245

GND = 0 V; test circuit see Figure 7.

Symbol	Parameter	Conditions		Min	Typ	Max	Unit
T_{amb} = 25 °C							
t_{PHL}, t_{PLH}	propagation delay An to Bn or Bn to An	see Figure 5					
		V_{CC} = 4.5 V		-	12	22	ns
		V_{CC} = 5.0 V; C_L = 15 pF		-	10	-	ns
t_{PZH}, t_{PZL}	3-state output enable time $\overline{OE}$ to An or $\overline{OE}$ to Bn	V_{CC} = 4.5 V; see Figure 6		-	16	30	ns
t_{PHZ}, t_{PLZ}	3-state output disable time $\overline{OE}$ to An or $\overline{OE}$ to Bn	V_{CC} = 4.5 V; see Figure 6		-	16	30	ns
t_{THL}, t_{TLH}	output transition time	V_{CC} = 4.5 V; see Figure 5		-	5	12	ns
C_{PD}	power dissipation capacitance per transceiver	V_I = GND to V_{CC} – 1.5 V	[1]	-	30	-	pF
T_{amb} = –40 °C to +85 °C							
t_{PHL}, t_{PLH}	propagation delay An to Bn or Bn to An	V_{CC} = 4.5 V; see Figure 5		-	-	28	ns
t_{PZH}, t_{PZL}	3-state output enable time $\overline{OE}$ to An or $\overline{OE}$ to Bn	V_{CC} = 4.5 V; see Figure 6		-	-	38	ns
t_{PHZ}, t_{PLZ}	3-state output disable time $\overline{OE}$ to An or $\overline{OE}$ to Bn	V_{CC} = 4.5 V; see Figure 6		-	-	38	ns
t_{THL}, t_{TLH}	output transition time	V_{CC} = 4.5 V; see Figure 5		-	-	15	ns
T_{amb} = –40 °C to +125 °C							
t_{PHL}, t_{PLH}	propagation delay An to Bn or Bn to An	V_{CC} = 4.5 V; see Figure 5		-	-	33	ns
t_{PZH}, t_{PZL}	3-state output enable time $\overline{OE}$ to An or $\overline{OE}$ to Bn	V_{CC} = 4.5 V; see Figure 6		-	-	45	ns
t_{PHZ}, t_{PLZ}	3-state output disable time $\overline{OE}$ to An or $\overline{OE}$ to Bn	V_{CC} = 4.5 V; see Figure 6		-	-	45	ns
t_{THL}, t_{TLH}	output transition time	V_{CC} = 4.5 V; see Figure 5		-	-	18	ns

[1] C_{PD} is used to determine the dynamic power dissipation (P_D in µW):

$P_D = C_{PD} \times V_{CC}^2 \times f_i \times N + \Sigma (C_L \times V_{CC}^2 \times f_o)$ where:

f_i = input frequency in MHz;

f_o = output frequency in MHz;

C_L = output load capacitance in pF;

V_{CC} = supply voltage in V;

N = number of inputs switching;

$\Sigma (C_L \times V_{CC}^2 \times f_o)$ = sum of outputs.

© Koninklijke Philips Electronics N.V. 2005. All rights reserved.

12. Waveforms

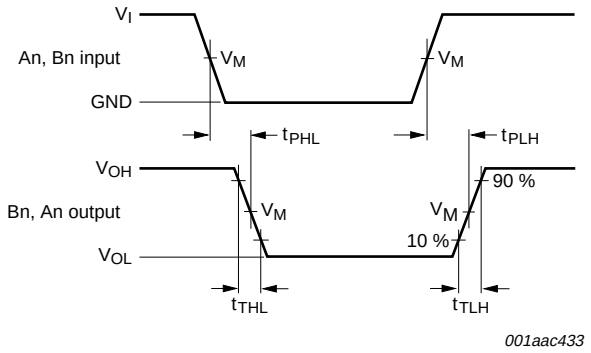

Measurement points are given in Table 11.

V_{OL} and V_{OH} are typical voltage output drop that occur with the output load.

Fig 5. Input (An, Bn) to output (Bn, An) propagation delays and output transition times

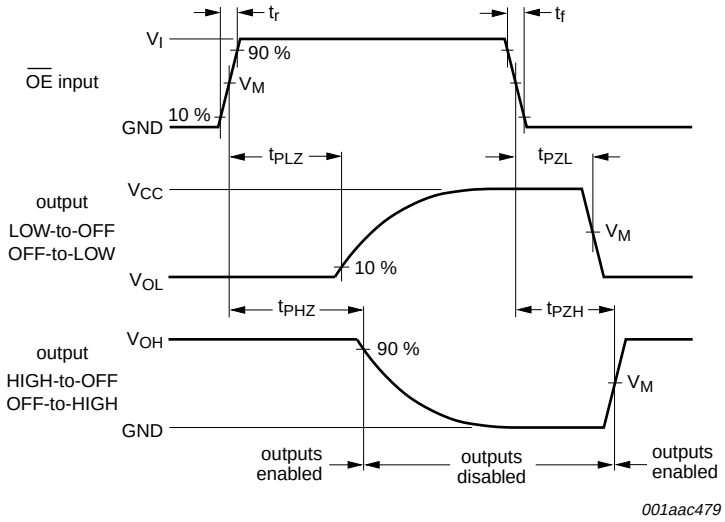

Measurement points are given in Table 11.

V_{OL} and V_{OH} are typical voltage output drop that occur with the output load.

Fig 6. 3-state output enable and disable times

Table 11: Measurement points

Type	Input	Output
	V_M	V_M
74HC245	$0.5V_{CC}$	$0.5V_{CC}$
74HCT245	1.3 V	1.3 V

© Koninklijke Philips Electronics N.V. 2005. All rights reserved.

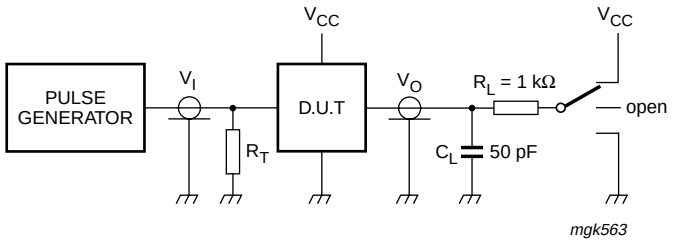

Test data is given in Table 12.

Definitions test circuit:

R_T = Termination resistance should be equal to output impedance Z_0 of the pulse generator.

C_L = Load capacitance including jig and probe capacitance.

R_L = Load resistor.

Fig 7. Load circuitry for switching times

Table 12: Test data

Type	Input		Test		
	V_I	t_r, t_f	t_{PHL}, t_{PLH}	t_{PZH}, t_{PHZ}	t_{PZL}, t_{PLZ}
74HC245	V_{CC}	6 ns	open	GND	V_{CC}
74HCT245	3 V	6 ns	open	GND	V_{CC}

© Koninklijke Philips Electronics N.V. 2005. All rights reserved.

13. Package outline

DIP20: plastic dual in-line package; 20 leads (300 mil) **SOT146-1**

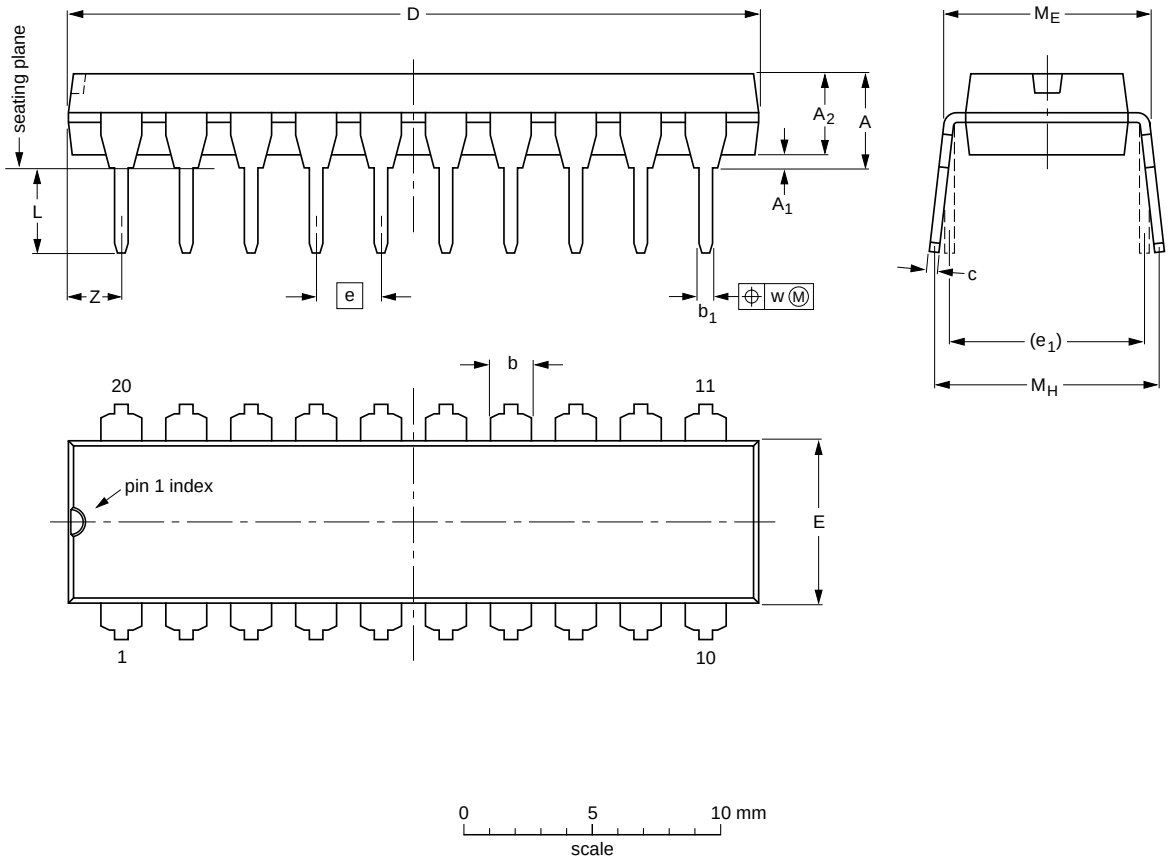

DIMENSIONS (inch dimensions are derived from the original mm dimensions)

UNIT	A max.	A_1 min.	A_2 max.	b	b_1	c	D (1)	E (1)	e	e_1	L	M_E	M_H	w	Z (1) max.
mm	4.2	0.51	3.2	1.73 1.30	0.53 0.38	0.36 0.23	26.92 26.54	6.40 6.22	2.54	7.62	3.60 3.05	8.25 7.80	10.0 8.3	0.254	2
inches	0.17	0.02	0.13	0.068 0.051	0.021 0.015	0.014 0.009	1.060 1.045	0.25 0.24	0.1	0.3	0.14 0.12	0.32 0.31	0.39 0.33	0.01	0.078

Note

1. Plastic or metal protrusions of 0.25 mm (0.01 inch) maximum per side are not included.

OUTLINE VERSION	REFERENCES				EUROPEAN PROJECTION	ISSUE DATE
	IEC	JEDEC	JEITA			
SOT146-1		MS-001	SC-603			~~99-12-27~~ 03-02-13

Fig 8. Package outline SOT146-1 (DIP20)

© Koninklijke Philips Electronics N.V. 2005. All rights reserved.

SO20: plastic small outline package; 20 leads; body width 7.5 mm **SOT163-1**

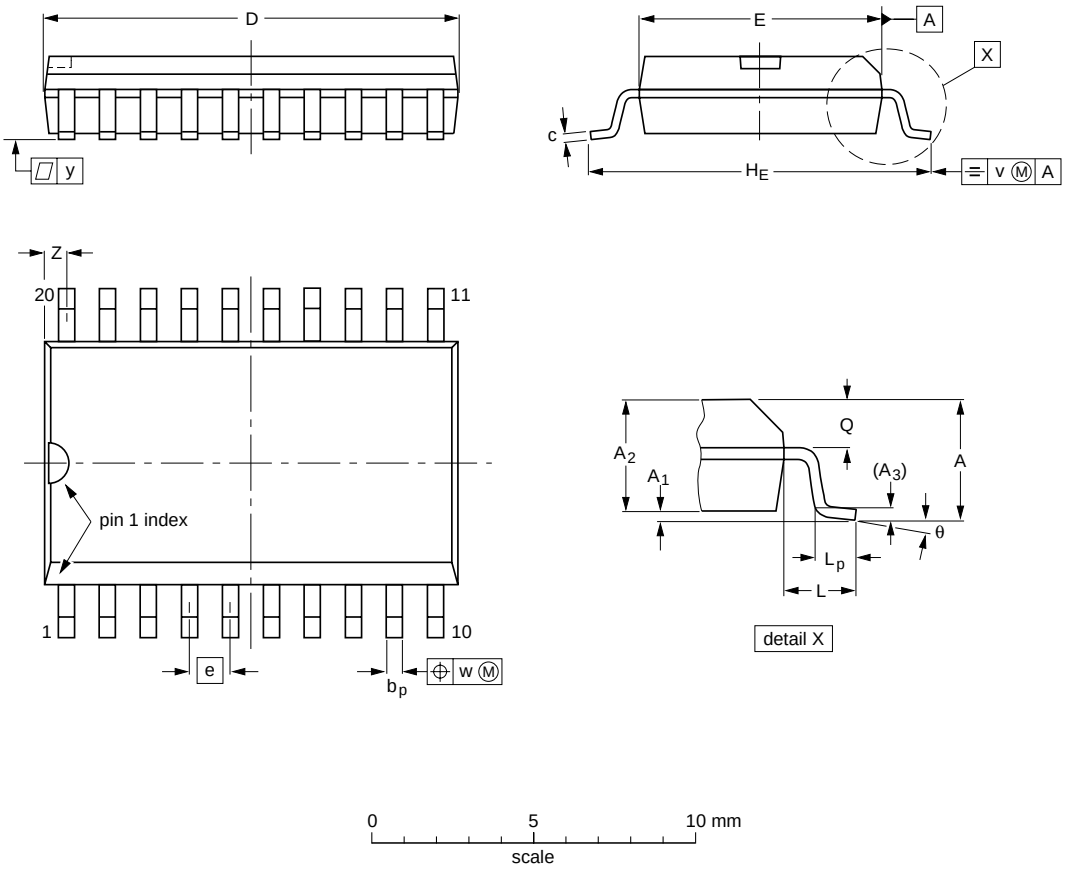

DIMENSIONS (inch dimensions are derived from the original mm dimensions)

UNIT	A max.	A_1	A_2	A_3	b_p	c	D (1)	E (1)	e	H_E	L	L_p	Q	v	w	y	Z (1)	θ
mm	2.65	0.3 0.1	2.45 2.25	0.25	0.49 0.36	0.32 0.23	13.0 12.6	7.6 7.4	1.27	10.65 10.00	1.4	1.1 0.4	1.1 1.0	0.25	0.25	0.1	0.9 0.4	8° 0°
inches	0.1	0.012 0.004	0.096 0.089	0.01	0.019 0.014	0.013 0.009	0.51 0.49	0.30 0.29	0.05	0.419 0.394	0.055	0.043 0.016	0.043 0.039	0.01	0.01	0.004	0.035 0.016	

Note

1. Plastic or metal protrusions of 0.15 mm (0.006 inch) maximum per side are not included.

OUTLINE VERSION	REFERENCES				EUROPEAN PROJECTION	ISSUE DATE
	IEC	JEDEC	JEITA			
SOT163-1	075E04	MS-013				~~99-12-27~~ 03-02-19

Fig 9. Package outline SOT163-1 (SO20)

© Koninklijke Philips Electronics N.V. 2005. All rights reserved.

SSOP20: plastic shrink small outline package; 20 leads; body width 5.3 mm **SOT339-1**

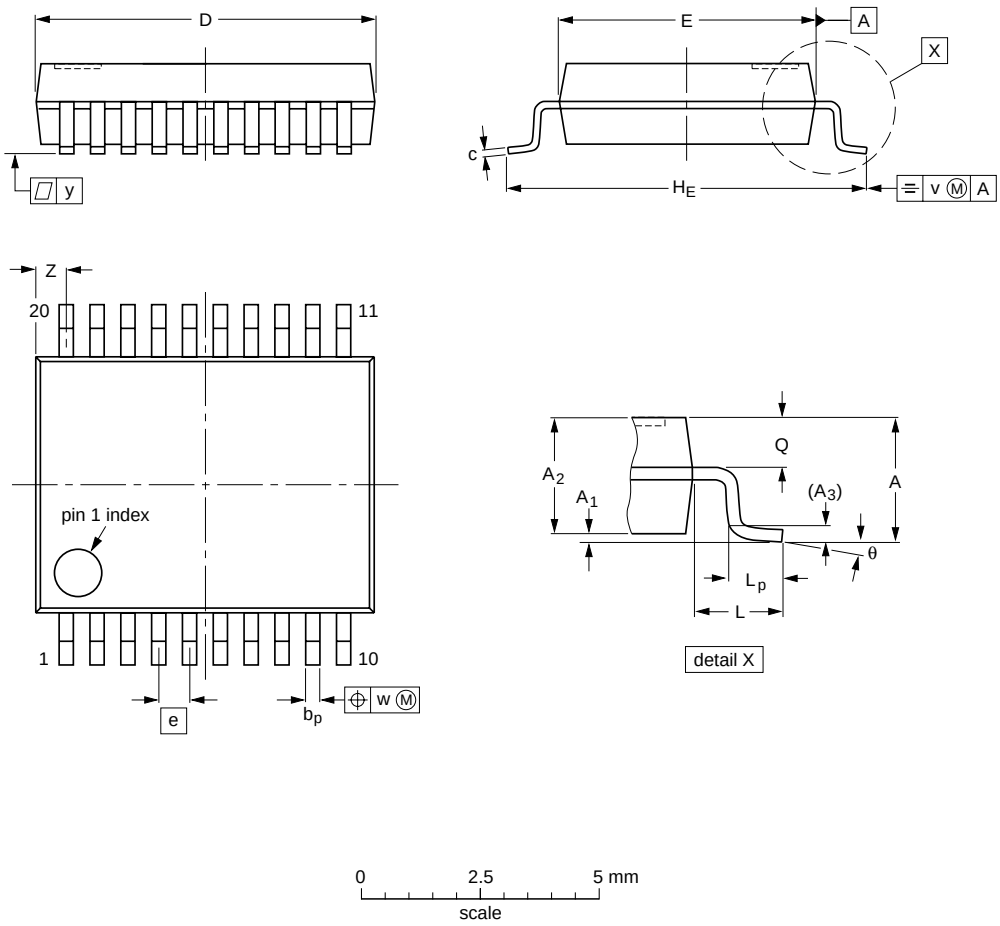

DIMENSIONS (mm are the original dimensions)

UNIT	A max.	A_1	A_2	A_3	b_p	c	D(1)	E(1)	e	H_E	L	L_p	Q	v	w	y	Z(1)	θ
mm	2	0.21 0.05	1.80 1.65	0.25	0.38 0.25	0.20 0.09	7.4 7.0	5.4 5.2	0.65	7.9 7.6	1.25	1.03 0.63	0.9 0.7	0.2	0.13	0.1	0.9 0.5	8° 0°

Note

1. Plastic or metal protrusions of 0.2 mm maximum per side are not included.

OUTLINE VERSION	REFERENCES				EUROPEAN PROJECTION	ISSUE DATE
	IEC	JEDEC	JEITA			
SOT339-1		MO-150				~~99-12-27~~ 03-02-19

Fig 10. Package outline SOT339-1 (SSOP20)

© Koninklijke Philips Electronics N.V. 2005. All rights reserved.

TSSOP20: plastic thin shrink small outline package; 20 leads; body width 4.4 mm **SOT360-1**

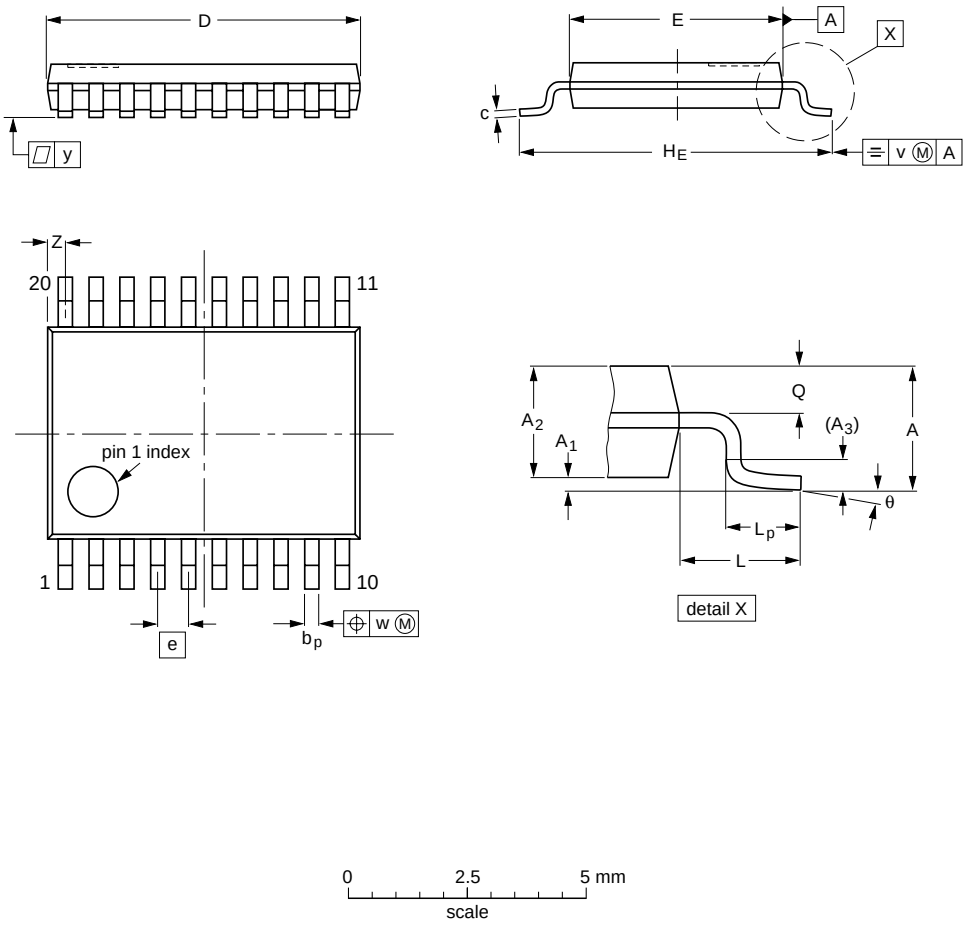

DIMENSIONS (mm are the original dimensions)

UNIT	A max.	A_1	A_2	A_3	b_p	c	D (1)	E (2)	e	H_E	L	L_p	Q	v	w	y	Z (1)	θ
mm	1.1	0.15 0.05	0.95 0.80	0.25	0.30 0.19	0.2 0.1	6.6 6.4	4.5 4.3	0.65	6.6 6.2	1	0.75 0.50	0.4 0.3	0.2	0.13	0.1	0.5 0.2	8° 0°

Notes

1. Plastic or metal protrusions of 0.15 mm maximum per side are not included.
2. Plastic interlead protrusions of 0.25 mm maximum per side are not included.

OUTLINE VERSION	REFERENCES				EUROPEAN PROJECTION	ISSUE DATE
	IEC	JEDEC	JEITA			
SOT360-1		MO-153				~~99-12-27~~ 03-02-19

Fig 11. Package outline SOT360-1 (TSSOP20)

© Koninklijke Philips Electronics N.V. 2005. All rights reserved.

DHVQFN20: plastic dual in-line compatible thermal enhanced very thin quad flat package; no leads; 20 terminals; body 2.5 x 4.5 x 0.85 mm **SOT764-1**

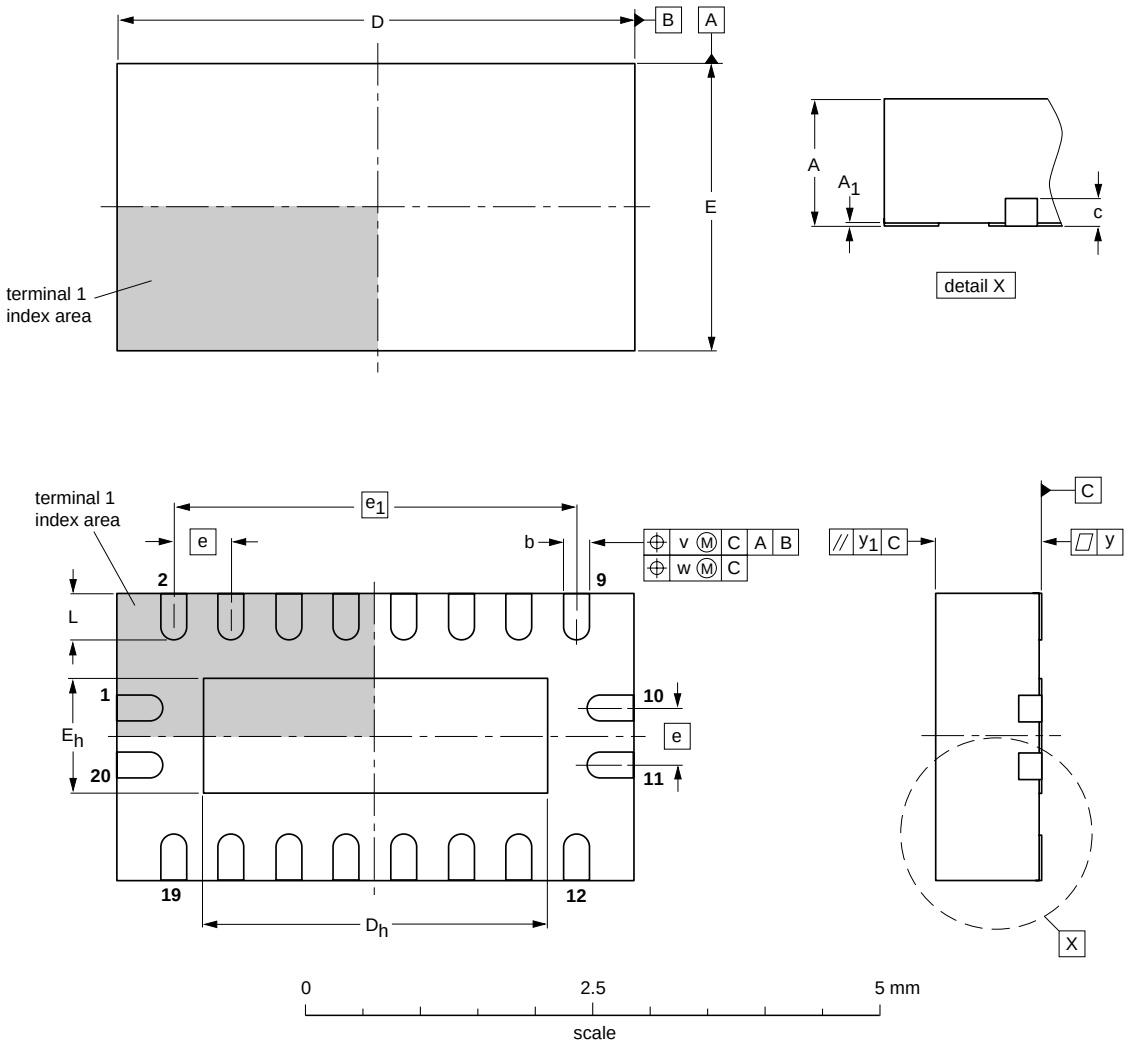

DIMENSIONS (mm are the original dimensions)

UNIT	A(1) max.	A_1	b	c	D(1)	D_h	E(1)	E_h	e	e_1	L	v	w	y	y_1
mm	1	0.05 0.00	0.30 0.18	0.2	4.6 4.4	3.15 2.85	2.6 2.4	1.15 0.85	0.5	3.5	0.5 0.3	0.1	0.05	0.05	0.1

Note

1. Plastic or metal protrusions of 0.075 mm maximum per side are not included.

OUTLINE VERSION	REFERENCES				EUROPEAN PROJECTION	ISSUE DATE
	IEC	JEDEC	JEITA			
SOT764-1	- - -	MO-241	- - -			~~02-10-17~~ 03-01-27

Fig 12. Package outline SOT764-1 (DHVQFN20)

© Koninklijke Philips Electronics N.V. 2005. All rights reserved.

14. Revision history

Table 13: Revision history

Document ID	Release date	Data sheet status	Change notice	Doc. number	Supersedes
74HC_HCT245_3	20050131	Product data sheet	-	9397 750 14502	74HC_HCT245_CNV_2
Modifications:	• The format of this data sheet is redesigned to comply with the new presentation and information standard of Philips Semiconductors • Section 4 “Ordering information”, Section 6 “Pinning information” and Section 13 “Package outline” are modified to include the DHVQFN20 package.				
74HC_HCT245_CNV_2	19930930	Product specification	-	-	-

© Koninklijke Philips Electronics N.V. 2005. All rights reserved.

15. Data sheet status

Level	Data sheet status [1]	Product status [2] [3]	Definition
I	Objective data	Development	This data sheet contains data from the objective specification for product development. Philips Semiconductors reserves the right to change the specification in any manner without notice.
II	Preliminary data	Qualification	This data sheet contains data from the preliminary specification. Supplementary data will be published at a later date. Philips Semiconductors reserves the right to change the specification without notice, in order to improve the design and supply the best possible product.
III	Product data	Production	This data sheet contains data from the product specification. Philips Semiconductors reserves the right to make changes at any time in order to improve the design, manufacturing and supply. Relevant changes will be communicated via a Customer Product/Process Change Notification (CPCN).

[1] Please consult the most recently issued data sheet before initiating or completing a design.

[2] The product status of the device(s) described in this data sheet may have changed since this data sheet was published. The latest information is available on the Internet at URL http://www.semiconductors.philips.com.

[3] For data sheets describing multiple type numbers, the highest-level product status determines the data sheet status.

16. Definitions

Short-form specification — The data in a short-form specification is extracted from a full data sheet with the same type number and title. For detailed information see the relevant data sheet or data handbook.

Limiting values definition — Limiting values given are in accordance with the Absolute Maximum Rating System (IEC 60134). Stress above one or more of the limiting values may cause permanent damage to the device. These are stress ratings only and operation of the device at these or at any other conditions above those given in the Characteristics sections of the specification is not implied. Exposure to limiting values for extended periods may affect device reliability.

Application information — Applications that are described herein for any of these products are for illustrative purposes only. Philips Semiconductors make no representation or warranty that such applications will be suitable for the specified use without further testing or modification.

17. Disclaimers

Life support — These products are not designed for use in life support appliances, devices, or systems where malfunction of these products can reasonably be expected to result in personal injury. Philips Semiconductors customers using or selling these products for use in such applications do so at their own risk and agree to fully indemnify Philips Semiconductors for any damages resulting from such application.

Right to make changes — Philips Semiconductors reserves the right to make changes in the products - including circuits, standard cells, and/or software - described or contained herein in order to improve design and/or performance. When the product is in full production (status 'Production'), relevant changes will be communicated via a Customer Product/Process Change Notification (CPCN). Philips Semiconductors assumes no responsibility or liability for the use of any of these products, conveys no license or title under any patent, copyright, or mask work right to these products, and makes no representations or warranties that these products are free from patent, copyright, or mask work right infringement, unless otherwise specified.

18. Contact information

For additional information, please visit: **http://www.semiconductors.philips.com**

For sales office addresses, send an email to: **sales.addresses@www.semiconductors.philips.com**

© Koninklijke Philips Electronics N.V. 2005. All rights reserved.

19. Contents

1 General description 1
2 Features 1
3 Quick reference data 1
4 Ordering information 2
5 Functional diagram 3
6 Pinning information 4
6.1 Pinning 4
6.2 Pin description 4
7 Functional description 5
7.1 Function table 5
8 Limiting values 5
9 Recommended operating conditions 6
10 Static characteristics 6
11 Dynamic characteristics 10
12 Waveforms 13
13 Package outline 15
14 Revision history 20
15 Data sheet status 21
16 Definitions 21
17 Disclaimers 21
18 Contact information 21

© Koninklijke Philips Electronics N.V. 2005

All rights are reserved. Reproduction in whole or in part is prohibited without the prior written consent of the copyright owner. The information presented in this document does not form part of any quotation or contract, is believed to be accurate and reliable and may be changed without notice. No liability will be accepted by the publisher for any consequence of its use. Publication thereof does not convey nor imply any license under patent- or other industrial or intellectual property rights.

Date of release: 31 January 2005
Document number: 9397 750 14502

Published in The Netherlands

НИОКР СИСТЕМС

ООО «НИОКРсистемс» - это оперативные поставки широкого спектра электронных компонентов отечественного и импортного производства напрямую от производителей и с крупнейших мировых складов. Реализуемая нашей компанией продукция насчитывает более полумиллиона наименований.

Благодаря этому наша компания предлагает к поставке практически не ограниченный ассортимент компонентов как оптовыми, мелкооптовыми партиями, так и в розницу.

Благодаря развитой сети поставщиков, помогаем в поиске и приобретении экзотичных или снятых с производства компонентов.

Наша компания это:

- Гарантия качества поставляемой продукции
- Широкий ассортимент
- Минимальные сроки поставок
- Техническая поддержка
- Подбор комплектации
- Индивидуальный подход
- Гибкое ценообразование
- Работаем по 275 ФЗ

ООО «НИОКР СИТЕМС»
Москва, 125362, Россия, ул. Вишневая, д. 9, к. 1, Блок 104 а и 104 в

Телефон: 8 (495) 268-14-82
Email: n@nsistems.ru

ИНН: 7735154786
ОГРН: 1167746717709