ITT

Interconnect Solutions
Cannon, VEAM, BIW

Cannon MIL-DTL-38999 Connectors

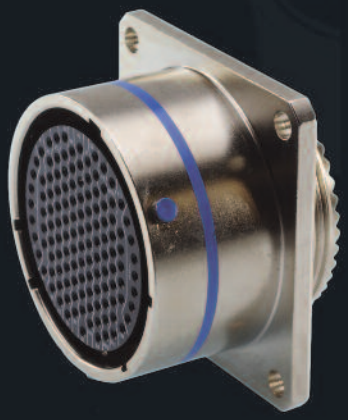

Engineered for life

Cannon, VEAM, BIW

A Historical Achievement of Technology Leadership

Defining and Championing Innovation

Showcasing a portfolio of creativity, ITT's "Engineered For Life" execution embraces products which have become ubiquitous in a broad collection of markets including: Military/Aerospace, Civil Aircraft, Industrial Instrumentation, Medical, Oil & Gas, Energy, Transportation, Telecom/Handset, Computer, Consumer, and Automotive.

ITT's rich interconnect history embraces contributions to both technological breakthroughs and social movements. With one of the industry's broadest product offerings, ITT's interconnect products have supported:

- Every Free World space mission, bringing the universe to our doorstep.
- Motion picture, radio, and television equipment, serving laughter and entertainment to millions.
- Commercial and military communications systems, linking the voices of the world.
- Computerized tools, reshaping the information highway.
- Aircraft, rapid transit, and automobiles, mobilizing our expanding society.
- Oil and natural gas production, powering the world's economies.
- Agricultural equipment, attacking the roots of world hunger.

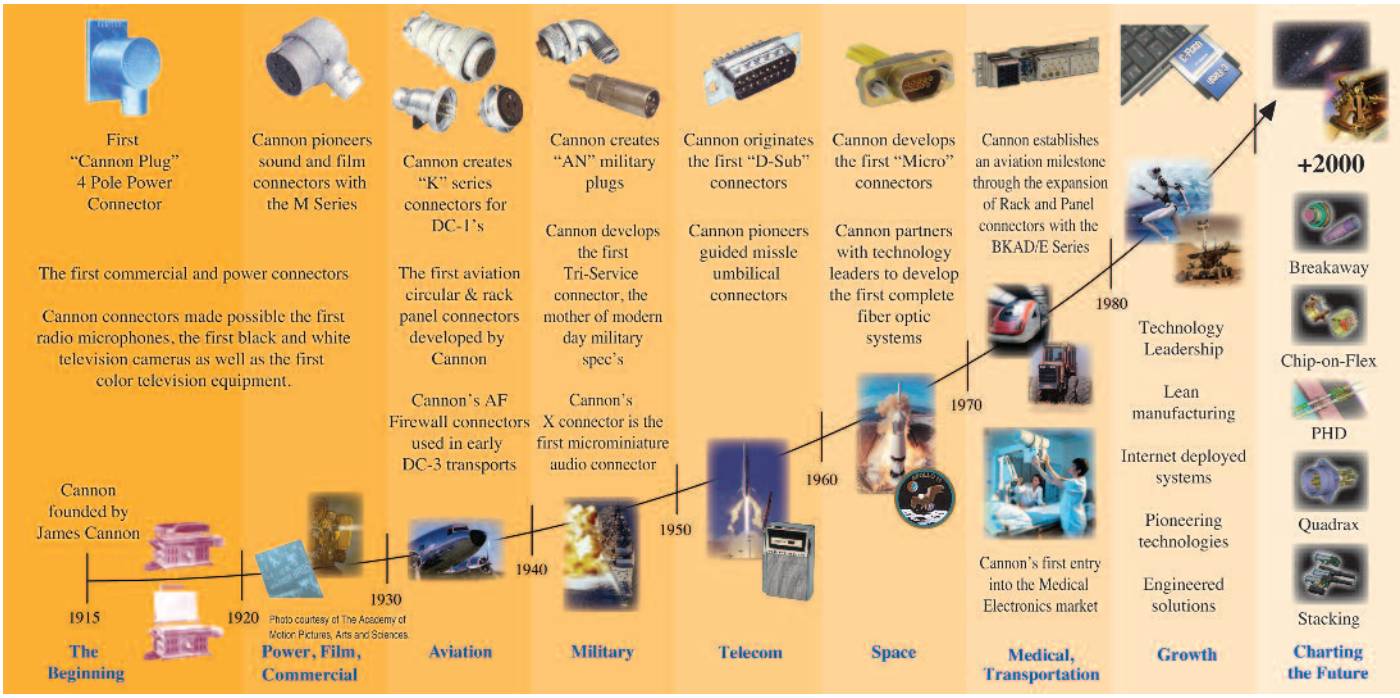

ITT

ITT Interconnect Solutions

ITT Interconnect Solutions is a division of the multinational ITT Corporation, a $9 billion dollar global enterprise representing the brands Cannon, VEAM, and BIW. Our connector portfolio remains the most extensive in the industry offering the most reliable and cost effective range of interconnect solutions. These innovations have enabled ITT to provide products and technologies to such markets as:

- Automotive
- Computer/Consumer
- Industrial/Instrumentation
- Military/Aerospace
- Oil Fields
- Telecom/Handset
- Transportation

When you specify a Cannon, VEAM or BIW connector, you can rely on a product designed, developed, and manufactured to the highest quality and reliability standards. This tradition of excellence is based on ITT's corporate culture of operating its businesses under the principles of Six Sigma. At ITT, Six Sigma is not just a quality philosophy but a complete corporate culture that drives the entire business. Our Value Based Management and Value Based Product Development systems are two cornerstones that allow for the development of both leadership and product engineering principles, ensuring the correct industry leading products are developed to the accepted market driven lead times. These principles have allowed ITT to become the market leader in all of our business portfolios.

Six Sigma Manufacturing

ITT operates manufacturing facilities in the United States, Germany, Italy, Mexico, China, Japan and the UK, all of which have particular product area strengths allowing ITT to offer a truly global footprint to our customers. Our facilities are world class and accommodate full vertical integration utilizing the latest manufacturing technologies including: automated and robotic machining centers, Super Market manufacturing cells, Kanban pull systems, and automated electrical, mechanical, and optical test and inspection equipment. The combination of our manufacturing strength and our advanced manufacturing facilities allows ITT to offer products at market driven prices. Our capabilities, especially in robotics, computerized precision tooling, Kaizen Project Management, Six Sigma tools, and testing, give ITT the most optimized global manufacturing footprint in the interconnect industry.

The Custom Difference

As the industry leader in harsh environment interconnect applications, ITT's world class engineering teams will work directly with our customers to design and develop cost effective solutions for their applications. In many cases we may modify one of our standard designs to ensure a highly reliable solution where timing is critical. Yet, in those cases where a complete custom interconnect solution is required, ITT will work with our customer's Engineers to design an interconnect solution which will be cost effective yet highly reliable. As professional consultants, our Engineering teams will provide a thorough systems and mechanical analysis of any proposed solution. These analyses provide our customers with sophisticated electrical signal and mechanical characterizations to determine the best solution for their application.

RoHS Compliance Information

ITT has implemented a strict parts control plan for all ITT electronics plants worldwide that allows the Cannon, VEAM, and BIW connector product portfolios to meet the requirements of European Union Directive 2002/95/EC better know as the Reduction of Hazardous Substances initiative. As appropriate, specific Cannon, VEAM, and BIW products may be ordered with an R prefix number which insures our customers will receive RoHS compliant parts for their commercial electronics applications and equipment. Since most RoHS hazardous substances center around specific metal plating and lead solder coatings, ITT's products for RoHS compliance are available in the following plating finishes: black zincelectroless nickel, stainless steel, Anodize over aluminum and Gold plating. It should be noted that gold plating would be recommended as the replacement for tin-lead solder when ordering board mount connectors.

RoHS COMPLIANT PART NUMBERS

Delivering solutions that perform ...

ITT offers an extensive array of connector and switch products and the ability to deliver standard or custom solutions to meet the most stringent military requirements.

Our interconnect range includes sealed circulars, plastic and metal shell bayonet coupling circulars, miniature metal shell circulars, PC board header connectors and sensor and direct device connectors. ITT is also a systems supplier, providing value-added module and harness assemblies.

In addition to our MIL-DTL-38999 series, we also offer these connectivity solutions:

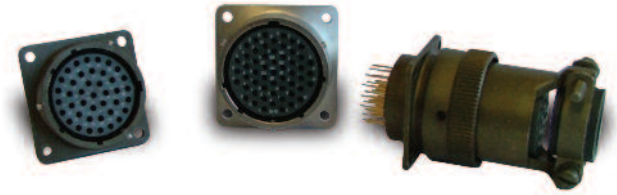

Cannon KPT / KPSE

Environmentally sealed miniature circular connectors available in two versions: KPT (solder contact) and KPSE (high performance crimp contact). Intermateable and intermountable with all MIL-C-26482 connectors and is available with many materials, finishes and configurations.

Cannon Combo D-Sub

Product offering includes ability to integrate signal and coax, high power, and high voltage.

Cannon CA-Bayonet

Signal and power connectors with exceptional sealing against the ingress of fluids and will withstand the effects of high vibrations.

Cannon Microminiature

High performance and reliability with exceptional versatility. Available in rectangular, circular and strip configurations, many of our connectors meet or exceed the applicable requirements of the MIL-DTL-83513 specification.

Table of Contents

Specifications and Test Data 3-5

KJL 6-9

KJ 10-15

KJA 16-18

Polarizing Positions 19

Contact Arrangements 20-21

Contacts . . . . . .22 -24

Torque Values / Wire Dimensions 25

Backshells 26-28

Tools 29

Assembly Instructions 30

MIL-DTL-38999 Specifications 31

ITT logo blocks and the composite ITT logo are registered trademarks of ITT Industries. ©2005

ITT

Dimensions shown in inches (mm)
Specifications and dimensions subject to change

SERIES I

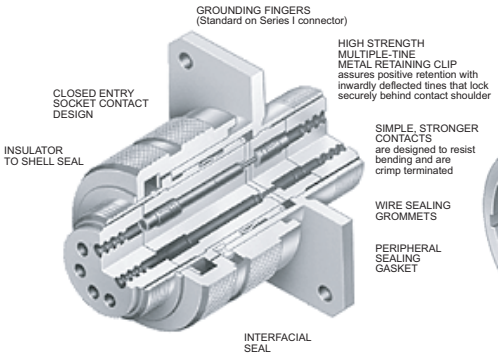

SERIES II

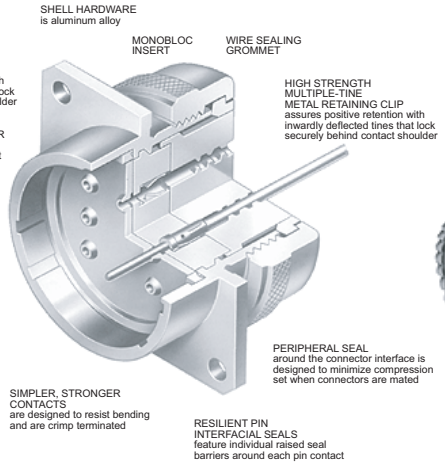

SERIES III

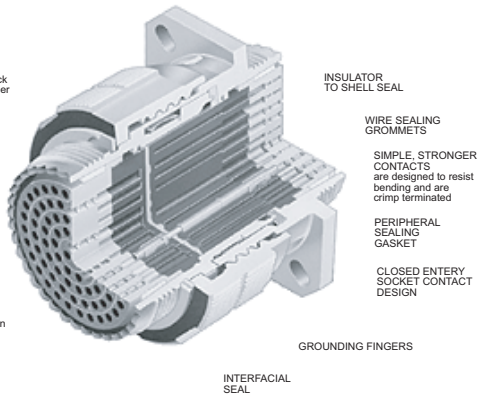

- Corrosion and zinc resistant shells of aluminum alloy with cadmium and zinc over nickel plating withstand a 500 hour salt spray exposure
- Rear release crimp snap-in contacts
- High contact density
- Standard MIL-C-39029 contacts, MIL-I-81969 application tools and MIL-STD 1560 insert arrangements

- Special/custom capabilities
- 100% scoop-proof - Series I and III
- Light weight /Low Profile - Series II
- Operates under severe high temperature vibration testing through 200 C - engineered for high density circuitry - Series III

- Interfacial seal helps prevent electrolytic erosion of contacts - Series III
- Superior EMI shielding provides outstanding protection up to 65dB at 10 GHZ. - Series III

Specification Comparison

Design Criteria	Series I	Series II	Series III
Low Profile/Light Weight	no	yes	no
Scoop Proof	yes	no	yes
Coupling System	Bayonet	Bayonet	Triple Lead Thread
Electrolytic Erosion	no	no	yes
Durability (Cycles)	500	250	500
High Impact Shock	yes	no	yes
External Bending Moment			
Shell Size 25	650 in/lbs	150 in/lbs	1000 in/lbs
Random Vibration "J"	Ambient	Ambient	492 F
Sine Vibration	30G, Ambient		60G, -85 to +392 F
Sand, Dust, Ice	yes		yes
Shell Size	9-25	8-24	9-25

Contact Rating

Contact Size	Test Current DC Test Amperage	Maximum Millivolt Drop*	Crimp Well Data: Well Diameter	Crimp Well Data: Well Depth
22D	5	40	.0345 ± .0010	.157/.141
22M**	3	30	.0280 ± .0010	.157/.141
22**	5	40	.0365 ± .0010	.157/.141
20	7.5	35	.0470 ± .0010	.229/.209
16	13	25	.0670 ± .0010	.229/.209
12	23	25	.1000 ± .0020	.229/.209

* Maximum millivolt drop data is determined by measuring resistance of mated contacts from end to en
** For reference only

Dimensions shown in inches (mm)
Specifications and dimensions subject to change

Performance and Material Specifications

MATERIALS AND FINISHES

	Receptacle	Grounded Plug
Shell	Aluminum alloy	Aluminum alloy*
Insulator	High grade plastic	High grade plastic
Contacts	Copper alloy, gold plate	Copper alloy, gold plate
Grommet and Seal	Silicone base elastomer	Silicone base elastomer
Jam Nut	Aluminum alloy	-
Grounding Spring	-	Beryllium copper

*Finish as noted in How To Order sections.

ELECTRICAL DATA

Contact Size: 22D, 22M*, 22*, 20, 16 and 12

Contact Rating and Wire Size Accomodation

Wire Size	Contact Size and Test Amps					
	22D	22M*	22*	20	16	12
28	1.5	1.5	-	-	-	-
26	2.0	2.0	2.0	-	-	-
24	3.0	3.0	3.0	3.0	-	-
22	5.0	-	5.0	5.0	-	-
20	-	-	-	7.5	7.5	-
18	-	-	-	-	10.0	-
16	-	-	-	-	13.0	-
14	-	-	-	-	-	17.0
12	-	-	-	-	-	23.0

*For reference only

Service Rating

Altitude	Service Rating M		Service Rating N		Service Rating I		Service Rating II	
	Mated	Unmated	Mated	Unmated	Mated	Unmated	Mated	Unmated
Sea Level	1300	1300	1000	1000	1800	1800	2300	2300
50,000 ft.	800	550	600	400	1000	600	1000	800
70,000 ft.	800	350	600	260	1000	400	1000	500
100,000 ft.	800	200	600	200	1000	200	1000	200

Test voltage, AC (rms)

Test Data

Test Description	Parameters
Durability	500 cycles of mating and unmating, 250 cycles for Series II with spring fingers
Temperature Range	Class F, N; - 65ºC (-85ºF) to + 200ºC (+392ºF) Class A; - 65ºC (-85ºF) to + 150ºC (+302ºF) Class B,W: - 65ºC (-85ºF) to + 175ºC (+347ºF)
Vibration	Mated connectors are vibrated with weights to simulate rear accessory loads to the following levels: Sine Vibration: Up to 60 G's - Series I & III (at rated temperature - Series III) Not applicable for Series II. Random Vibration: 43.7 Grms at rated temperature - Series III 49.5 Grms at Ambient Temperature - Series I & III 43.7 Grms at Ambient Temperature - Series II
EMI Shielding Effectiveness	Class F: EMI leakage attenuation, greater than 90dB at 100Mhz, greater than 65dB at 10 GHz. Shell to shell conductivity, 1.0 millivolt max. resistance. Class W: EMI leakage attenuation, greater than 90dB at 100 MHz, greater than 50dB at 10 GHz. Shell to shell conductivity, 2.5 millivolt max.
Corrosion Resistant	Class B, W, and Z will withstand 500 hours salt spray. Class A, F, N, will withstand 48 hours salt spray.
Fluid Immersion	Connectors are fluid resistant to many fuels, solvents, coolants and oils.
High Impact Shock	Mated conectors terminated with MIL-C-915 cable and environmentally sealed backshells will withstand high impact shock per MIL-S-901. Applicable to Series I & III only.
Altitude	Designed to operate between sea level and 100,000 ft. above sea level.
Other Environments	Mated connectors shall withstand sand and dust per method 110 of MIL-STD-202 and be ice resistant. Applicable to Series I & III only.

NOTE: For hermetic standard or test data please consult ITT.

Insert Availability and Identification

Series II	Series I & III	Service Rating	Total Contacts	Contact Size 22D	20	16	12	8
8-35	9-35	M	6	6				
8-98	9-98	I	3		3			
	11-4	I	4		4			
10-5	11-5	I	5		5			
10-35	11-35	M	13	13				
10-98	11-98	I	6		6			
10-99	11-99	I	7		7			
12-3		II	3			3		
12-4	13-4	I	4			4		
12-8	13-8	I	8		8			
12-35	13-35	M	22	22				
12-98	13-98	I	10		10			
14-5	15-5	II	5			5		
14-15	15-15	I	15		14	1		
14-18	15-18	I	18		18			
	15-19	I	19		19			
14-35	15-35	M	37	37				
14-97	15-97	I	12		8	4		
16-6	17-6	I	6				6	
16-8	17-8	II	8			8		
16-26	17-26	I	26		26			
16-35	17-35	M	55	55				
16-99	17-99	I	23		21	2		
18-11	19-11	II	11			11		
18-28	19-28	I	28		26	2		
18-30	19-30	I	30		29	1		
18-32	19-32	I	32		32			
18-35	19-35	M	66	66				
	21-11	I	11				11	
20-16	21-16	II	16			16		
20-35	21-35	M	79	79				
20-39	21-39	I	39		37	2		
20-41	21-41	I	41		41			
	21-75	M	4					4***
22-21	23-21	II	21			21		
22-32	23-32	I	32		32			
22-35	23-35	M	100	100				
22-53	23-53	I	53		53			
22-55	23-55	I	55		55			
24-4	25-4	I	56		48	8		
	25-19	I	19				19	
24-24	25-24	I	24			12	12	
24-29	25-29	I	29			29		
24-35	25-35	M	128	128				
	25-37	I	37			37		
	25-43	I	43		23	20		
	25-46	I, Twinax	46		40	4		2***
	25-8	Twinax	8					8***
	25-20	N, Coax, Twinax	30		10	13	4**	3***
	25-42	I, Coax	42		38			4*
24-61	25-61	I	61		61			
	25-64	I	64	40	8	10	6	
	25-66	I	66	53	2	11		

* Coax for RG-180 cables
** Coax for RG-174, -179, or -316 cables
*** Twinax for M17/176-00002 cables
(check factory for other cable applications)

Dimensions shown in inches (mm)
Specifications and dimensions subject to change

How To Order

Military Nomenclature

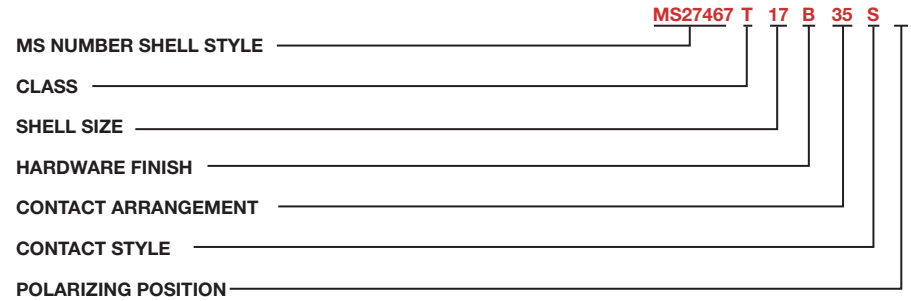

MS NUMBER SHELL STYLE
- MS27466 - Wall Mounting Receptacle
- MS27468 - Jam Nut Receptacle
- MS27467 - Grounded Plug
- MS27656 - Wall Mounting Receptacle (back panel mounting)
- MS27505 - Box Mounting Receptacle (back panel) (Class E)

CLASS
- E - Inactive for new design. Superseded by Class T.
- G - Environmental resistant Space Grade
- P - Environment - resistant with straight potting cup accessories
- T - Environment - resistant with accessory threads and teeth, except MS27505 (without rear accessory) (Class T not applicable to MS27505)

SHELL SIZE
9, 11, 13, 15, 17, 19, 21, 23, and 25

HARDWARE FINISH STANDARD
- A - Bright cadmium over electroless nickel plate, -85ºF to +302ºF (-65ºC to +150ºC)
- B - Olive drab cadmium over electroless nickel plate, -85ºF to +347ºF (-65ºC to +175ºC)
- F - Electroless nickel, -85ºF to +392ºF (-65ºC to +200ºC)

CONTACT ARRANGEMENT
See pages 20 and 21.

CONTACT STYLE
- P - Pin
- S - Socket
- *A - Less Pin Contact
- *B - Less Socket Contact

*Used only when other than power contacts are to be installed (i.e. shielded, thermocouple, etc.)

POLARIZING POSITION
A,B,C, and D. (No letters required for normal).
See page 19.

Note: To order MS connectors less standard power contacts, purchase order must state "Less Contacts"

Cannon Nomenclature

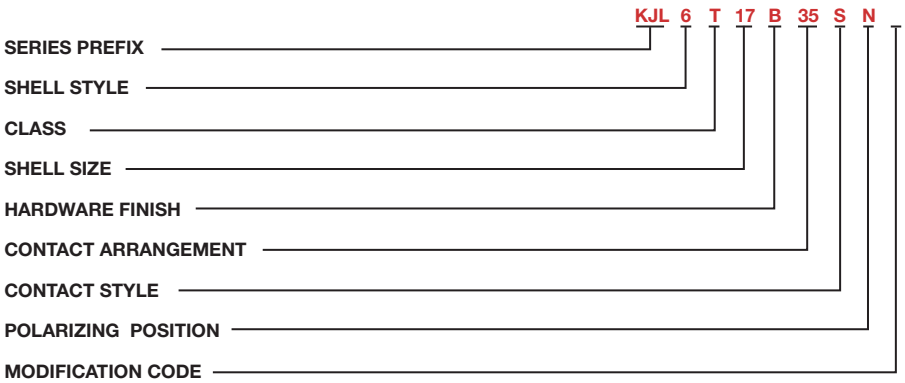

SERIES PREFIX
KJL - Series I-Scoop proof

SHELL STYLE
- 0 - Wall mounting receptacle
- 3 - Wall mounting receptacle (back panel mounting)
- 4 - Thru bulkhead receptacle
- 5 - Box mounting receptacle (back panel mounting)
- 6 - Straight plug, grounded
- 7 - Jam nut receptacle

CLASS
- E - Inactive for new design. Superseded by Class T.
- G - Environmental resistant - Space Grade
- F - Environment - resistant with strain relief accessory
- P - Environment - resistant with straight potting cup accessory
- T - Environment - resistant (without rear accessory) (Class T not applicable to KJL5)

SHELL SIZE
9,11,13,15,17,19,21,23 and 25

HARDWARE FINISH STANDARD
- A - Bright cadmium over electroless nickel plate, -85ºF to +302ºF (-65ºC to +150ºC)
- B - Olive drab cadmium over electroless nickel plate, -85ºF to +347ºF (-65ºC to + 175ºC)
- N - Electroless nickel, -85ºF to +392ºF (-65ºC to +200ºC)
- Z - Zinc Nickel, Black
- - - (Dash) When using a finish modification code

CONTACT ARRANGEMENT
See pages 20 and 21.

CONTACT STYLE
- P - Pin
- S - Socket
- PS - Pin-Socket (Shell style 4 only)

POLARIZING POSITION
N (normal), A, B, C, D. See page 19.

MODIFICATION CODE
- L - Less contacts, not stamped on connector
- 16 - Outgassed NASA space graded connector
- 27- Outgassed, standard connector
- A296 Black Zinc Cobalt, RoHS Compliant
- T69 Olive Drab (Green) Zinc Cobalt

Wall Mounting Receptacle

MS27466
(MS service class E, P, T)

KJL0

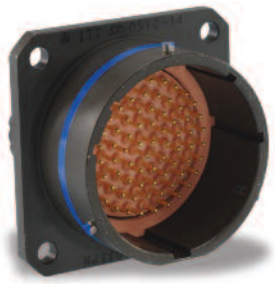

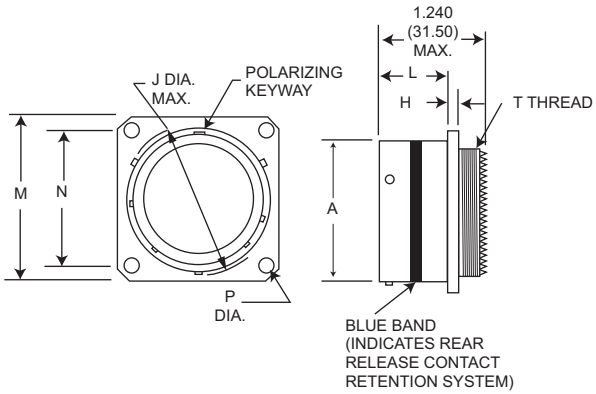

NOTE: For backshell dimensions and configurations, see pages 26 and 28.

Shell Size	A Dia. Max.	H Max.	J Dia. Max.	L Max.	M Max.	N T.P.	P Dia. Max.	T Thread	Overall Length With Backshells F Cable Clamp	Overall Length With Backshells P Potting Max.
9	.573 (14.55)	.100 (2.54)	.662 (16.81)	.632 (16.05)	.958 (24.33)	.719 (18.26)	.138 (3.51)	7/16-28UNEF-2A	1.846 (46.89)	1.451 (36.86)
11	.701 (17.81)	.100 (2.54)	.810 (20.57)	.632 (16.05)	1.051 (26.70)	.812 (20.62)	138 (3.51)	9/16-24UNEF-2A	1.846 (46.89)	1.451 (36.86)
13	.851 (21.62)	.100 (2.54)	.960 (24.38)	.632 (16.05)	1.145 (29.08)	.906 (23.01)	.138 (3.51)	11/16-24UNEF-2A	1.846 (46.89)	1.451 (36.86)
15	.976 (24.79)	.100 (2.54)	1.085 (27.56)	.632 (16.05)	1.239 (31.47)	.969 (24.61)	.138 (3.51)	13/16-20UNEF-2A	1.846 (46.89)	1.451 (36.86)
17	1.101 (27.97)	.100 (2.54)	1.210 (30.73)	.632 (16.05)	1.332 (33.83)	1.062 (26.97)	.138 (3.51)	15/16-20UNEF-2A	1.966 (49.94)	1.451 (36.86)
19	1.208 (30.68)	.100 (2.54)	1.317 (33.45)	.632 (16.05)	1.458 (37.03)	1.156 (29.36)	.138 (3.51)	1-1/16-18UNEF-2A	1.966 (50.70)	1.451 (36.86)
21	1.333 (33.86)	.130 (3.30)	1.442 (36.63)	.602 (15.29)	1.582 (40.18)	1.250 (31.75)	.138 (3.51)	1-3/16-18UNEF-2A	1.966 (50.70)	1.451 (36.86)
23	1.458 (37.03)	.130 (3.30)	1.567 (39.80)	.602 (15.29)	1.708 (43.38)	1.375 (34.93)	.157 (3.99)	1-5/16-18UNEF-2A	1.966 (50.70)	1.451 (36.86)
25	1.583 (40.21)	.130 (3.30)	1.692 (42.98)	.602 (15.29)	1.832 (46.53)	1.500 (38.10)	.157 (3.99)	1-7/16-18UNEF-2A	1.966 (50.70)	1.451 (36.86)

Wall Mounting Receptacle (Back Panel)

MS27656
(MS service class E, P, T)

KJL3

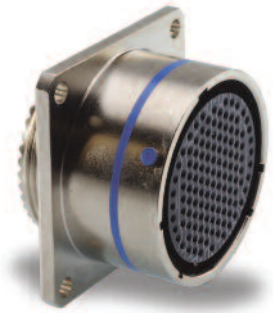

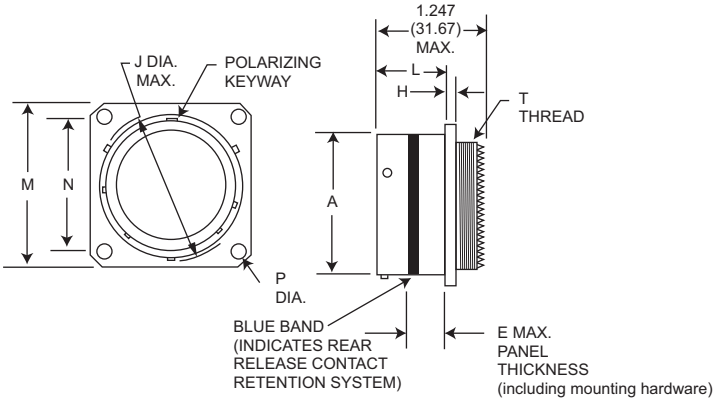

NOTE: For backshell dimensions and configurations, see pages 26 and 28.

Shell Size	A Dia. Max.	E Max.	H Max.	J Dia. Max.	L Max.	M Max.	N T.P.	P Dia. Max.	T Thread	Overall Length With Backshells F Cable Clamp	Overall Length With Backshells P Potting Max.
9	.573 (14.55)	.234 (5.94)	.100 (2.54)	.662 (16.81)	.820 (20.83)	.958 (24.33)	.719 (18.26)	.138 (3.51)	7/16-28UNEF-2A	1.805 (45.85)	1.410 (35.81)
11	.701 (17.81)	.234 (5.94)	.100 (2.54)	.810 (20.57)	.820 (20.83)	1.051 (26.70)	.812 (20.62)	138 (3.51)	9/16-24UNEF-2A	1.805 (45.85)	1.410 (35.81)
13	.851 (21.62)	.234 (5.94)	.100 (2.54)	.960 (24.38)	.820 (20.83)	1.145 (29.08)	.906 (23.01)	.138 (3.51)	11/16-24UNEF-2A	1.805 (45.85)	1.410 (35.81)
15	.976 (24.79)	.234 (5.94)	.100 (2.54)	1.085 (27.56)	.820 (20.83)	1.239 (31.47)	.969 (24.61)	.138 (3.51)	13/16-20UNEF-2A	1.805 (45.85)	1.410 (35.81)
17	1.101 (27.97)	.234 (5.94)	.100 (2.54)	1.210 (30.73)	.820 (20.83)	1.332 (33.83)	1.062 (26.97)	.138 (3.51)	15/16-20UNEF-2A	1.935 (48.90)	1.410 (35.81)
19	1.208 (30.68)	.234 (5.94)	.100 (2.54)	1.317 (33.45)	.820 (20.83)	1.458 (37.03)	1.156 (29.36)	.138 (3.51)	1-1/16-18UNEF-2A	1.955 (49.66)	1.410 (35.81)
21	1.333 (33.86)	.204 (5.18)	.130 (3.30)	1.442 (36.63)	.790 (20.07)	1.582 (40.18)	1.250 (31.75)	.138 (3.51)	1-3/16-18UNEF-2A	1.955 (49.66)	1.410 (35.81)
23	1.458 (37.03)	.204 (5.18)	.130 (3.30)	1.567 (39.80)	.790 (20.07)	1.708 (43.38)	1.375 (34.93)	.157 (3.99)	1-5/16-18UNEF-2A	1.955 (49.66)	1.410 (35.81)
25	1.583 (40.21)	.193 (4.90)	.130 (3.30)	1.692 (42.98)	.790 (20.07)	1.832 (46.53)	1.500 (38.10)	.157 (3.99)	1-7/16-18UNEF-2A	1.955 (49.66)	1.410 (35.81)

Performance Specifications-Pages 3 and 4. Contacts, Sealing Plugs, Assembly Tools - Pages 22, 28, and 29. Contact Arrangements - Pages 20 and 28.

Dimensions shown in inches (mm)
Specifications and dimensions subject to change

Box Mounting Receptacle (Back Panel)

MS27505E
(MS service class E)

KJL5E

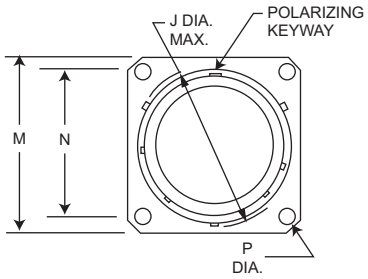

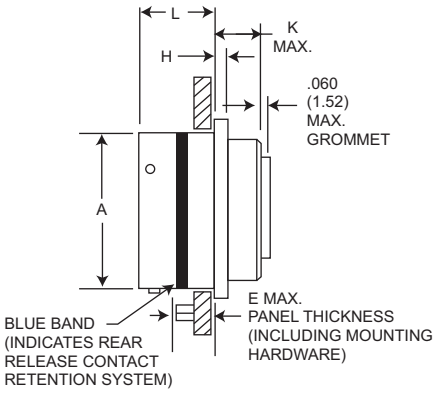

NOTE: This connector does not accommodate backshells.

Shell Size	A Dia. Max.	E Max.	H Max.	J Dia. Max.	K Max.	L Max.	M Max.	N T.P.	P Dia. Max.
9	.573 (14.55)	.234 (5.94)	.100 (2.54)	.662 (16.81)	.219 (5.56)	.820 (20.83)	.958 (24.33)	.719 (18.26)	.138 (3.51)
11	.701 (17.81)	.234 (5.94)	.100 (2.54)	.810 (20.57)	.219 (5.56)	.820 (20.83)	1.051 (26.70)	.812 (20.62)	138 (3.51)
13	.851 (21.62)	.234 (5.94)	.100 (2.54)	.960 (24.38)	.219 (5.56)	.820 (20.83)	1.145 (29.08)	.906 (23.01)	.138 (3.51)
15	.976 (24.79)	.234 (5.94)	.100 (2.54)	1.085 (27.56)	.219 (5.56)	.820 (20.83)	1.239 (31.47)	.969 (24.61)	.138 (3.51)
17	1.101 (27.97)	.234 (5.94)	.100 (2.54)	1.210 (30.73)	.219 (5.56)	.820 (20.83)	1.332 (33.83)	1.062 (26.97)	.138 (3.51)
19	1.208 (30.68)	.234 (5.94)	.100 (2.54)	1.317 (33.45)	.219 (5.56)	.820 (20.83)	1.458 (37.03)	1.156 (29.36)	.138 (3.51)
21	1.333 (33.86)	.204 (5.18)	.130 (3.30)	1.442 (36.63)	.250 (6.35)	.790 (20.07)	1.582 (40.18)	1.250 (31.75)	.138 (3.51)
23	1.458 (37.03)	.204 (5.18)	.130 (3.30)	1.567 (39.80)	.250 (6.35)	.790 (20.07)	1.708 (43.38)	1.375 (34.93)	.157 (3.99)
25	1.583 (40.21)	.193 (4.90)	.130 (3.30)	1.692 (42.98)	.250 (6.35)	.790 (20.07)	1.832 (46.53)	1.500 (38.10)	.157 (3.99)

Straight Plug Grounded

MS27467
(MS service class E, P, T)

KJL6

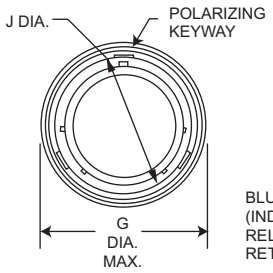

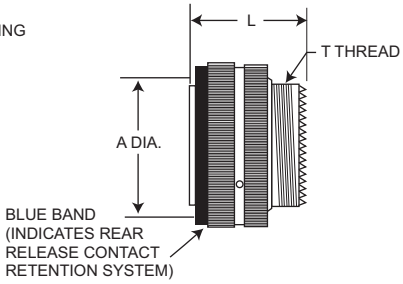

NOTE: For backshell dimensions and configurations, see pages 26 and 28.

Shell Size	A Max.	G Dia. Max.	J Dia. Max.	(Class T) L Max.	T Thread	Overall Length With Backshells F Cable Clamp	P Potting Max.
9	.585 (14.86)	.859 (21.82)	.483 (12.27)	1.234 (31.34)	7/16-28UNEF-2A	1.793 (45.54)	1.671 (42.44)
11	.717 (18.21)	.984 (24.99)	.611 (15.52)	1.234 (31.34)	9/16-24UNEF-2A	1.793 (45.54)	1.671 (42.44)
13	.866 (22.00)	1.156 (29.36)	.760 (19.30)	1.234 (31.34)	11/16-24UNEF-2A	1.793 (45.54)	1.671 (42.44)
15	.990 (25.15)	1.281 (32.54)	.885 (22.48)	1.234 (31.34)	13/16-20UNEF-2A	1.793 (45.54)	1.671 (42.44)
17	1.115 (28.32)	1.406 (35.71)	1.010 (25.65)	1.234 (31.34)	15/16-20UNEF-2A	1.913 (48.59)	1.671 (42.44)
19	1.222 (31.04)	1.516 (38.51)	1.115 (28.32)	1.234 (31.34)	1-1/16-18UNEF-2A	1.943 (49.35)	1.671 (42.44)
21	1.347 (34.21)	1.641 (41.68)	1.240 (31.50)	1.234 (31.34)	1-3/16-18UNEF-2A	1.943 (49.35)	1.766 (44.86)
23	1.472 (37.39)	1.766 (44.86)	1.365 (34.67)	1.234 (31.34)	1-5/16-18UNEF-2A	1.943 (49.35)	1.766 (44.86)
25	1.597 (40.56)	1.891 (48.03)	1.490 (37.85)	1.234 (31.34)	1-7/16-18UNEF-2A	1.943 (49.35)	1.766 (44.86)

Performance Specifications-Pages 3 and 4.
Contacts, Sealing Plugs, Assembly Tools - Pages 22, 28 and 29.
Contact Arrangements - Pages 20 and 21.

Jam Nut Receptacle

MS27468
(MS service class E,P,T)

KJL7

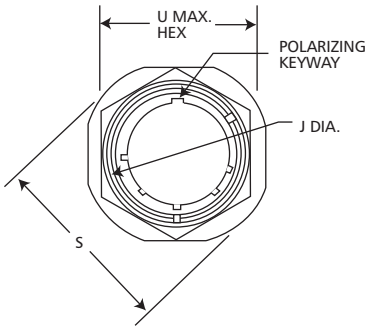

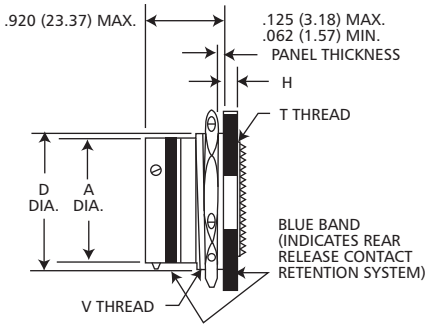

NOTE: For backshell dimensions and configurations, see pages 26 and 28.

Shell Size	A Dia. Max.	D Max.	H Max.	J Dia. Max.	S Dia. Max.	T Thread	U Max. Hex.	V Thread Class 2A	Overall Length With Backshells F Cable Clamp	Overall Length With Backshells P Potting Max.
9	.573 (14.55)	.655 (16.64)	.120 (3.05)	.662 (16.81)	1.204 (30.58)	7/16-28UNEF-2A	.892 (22.66)	11/16-24UNEF	1.846 (46.89)	1.451 (36.86)
11	.701 (17.81)	.755 (19.18)	.120 (3.05)	.810 (20.57)	1.391 (35.33)	9/16-24UNEF-2A	1.017 (25.83)	13/16-24UNEF	1.846 (46.89)	1.451 (36.86)
13	.851 (21.62)	.942 (23.93)	.120 (3.05)	.960 (24.38)	1.516 (35.51)	11/16-24UNEF-2A	1.205 (30.61)	1-20UNEF	1.846 (46.89)	1.451 (36.86)
15	.976 (24.79)	1.066 (27.08)	.120 (3.05)	1.085 (27.56)	1.641 (41.68)	13/16-20UNEF-2A	1.329 (33.76)	1-1/8-18UNEF	1.846 (46.89)	1.451 (36.86)
17	1.101 (27.97)	1.191 (30.25)	.120 (3.05)	1.210 (30.73)	1.766 (44.86)	15/16-20UNEF-2A	1.455 (36.96)	1-1/4-18UNEF	1.966 (49.94)	1.451 (36.86)
19	1.208 (30.68)	1.316 (33.43)	.151 (3.84)	1.317 (33.45)	1.954 (49.63)	1-1/16-18UNEF-2A	1.579 (40.11)	1-3/8-18UNEF	1.996 (50.70)	1.451 (36.86)
21	1.333 (33.86)	1.441 (36.60)	.151 (3.84)	1.442 (36.63)	2.078 (52.78)	1-3/16-18UNEF-2A	1.705 (43.31)	1-1/2-18UNEF	1.996 (50.70)	1.451 (36.86)
23	1.458 (37.03)	1.566 (39.78)	.151 (3.84)	1.567 (39.80)	2.204 (55.98)	1-5/16-18UNEF-2A	1.829 (46.46)	1-5/8-18UNEF	1.996 (50.70)	1.451 (36.86)
25	1.583 (40.21)	1.691 (42.95)	.151 (3.84)	1.692 (42.98)	2.328 (59.13)	1-7/16-18UNEF-2A	20.17 (51.23)	1-3/4-18UNS	1.996 (50.70)	1.451 (36.86)

Performance Specifications-Pages 3 and 4.
Contacts, Sealing Plugs, Assembly Tools - Pages 20, 28, and 29.
Contact Arrangements - Pages 20, 21.

Panel Cutouts

Flange Mounted Receptacles

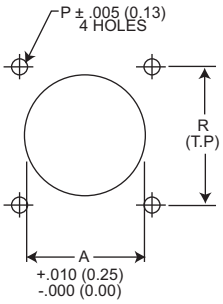

Jam Nut Receptacles

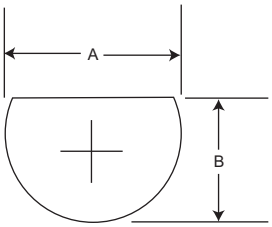

Shell Size	A Dia.	P Dia.	(Class T) R	Mtg. Screw	Shell Size	A +.010 (.25) -.000 (.00)	B +.000 (.00) -.010 (.25)
9	.665 (16.89)	.128 (3.25)	.719 (18.26)	#4	9	.700 (17.78)	.670 (17.02)
11	.812 (20.62)	.128 (3.25)	.812 (20.62)	#4	11	.825 (20.96)	.771 (19.58)
13	.965 (24.51)	.128 (3.25)	.906 (23.01)	#4	13	1.010 (25.65)	.955 (24.26)
15	1.085 (27.55)	.128 (3.25)	.969 (24.61)	#4	15	1.135 (28.83)	1.085 (27.56)
17	1.250 (31.75)	.128 (3.25)	1.062 (26.97)	#4	17	1.260 (32.00)	1.210 (30.73)
19	1.322 (33.57)	.128 (3.25)	1.156 (29.36)	#4	19	1.385 (35.18)	1.335 (33.91)
21	1.447 (36.75)	.128 (3.25)	1.250 (31.75)	#4	21	1.510 (38.35)	1.460 (37.08)
23	1.569 (39.85)	.154 (3.91)	1.375 (34.93)	#6	23	1.635 (41.53)	1.585 (40.26)
25	1.703 (43.25)	.150 (3.81)	1.500 (38.10)	#6	25	1.760 (44.70)	1.710 (43.43)

Dimensions shown in inches (mm)
Specifications and dimensions subject to change

How To Order

Military Nomenclature

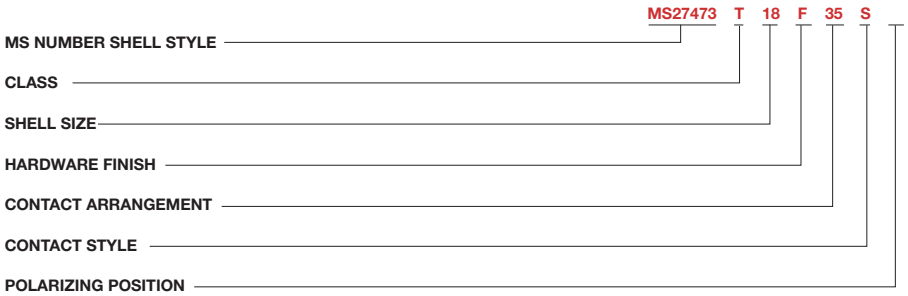

MS NUMBER SHELL STYLE
- MS27472 - Wall Mounting Receptacle
- MS27473 - Straight Plug
- MS27474 - Jam Nut Receptacle
- MS27484 - Grounded Plug
- MS27497 - Wall Mounting Receptacle (back panel mounting)
- MS27513 - Box Mounting Receptacle
- MS27499 - Box Mounting Receptacle (Class E)
- MS27508 - Box Mounting (back panel mounting) (Class E)

CLASS
- E - Environment - resistant with rear accessory (without strain relief)
- G - Environmental - resistant wall mount and jam nut receptacle and plug types. Space Grade.
- P - Enironment - resistant with straight potting cup accessories
- T - Environment - resistant (without rear accessory). (Class T not applicable to MS27499, MS27513, and MS27508.)

SHELL SIZE
8, 10, 12, 14, 16, 18, 20, 22, 24.

HARDWARE FINISH STANDARD
- A - Bright cadmium over electroless nickel plate, - 85ºF to + 302ºF (- 65ºC to + 150ºC)
- B - Olive drab cadmium over electoless nickel plate, - 85ºF to + 347ºF (- 65ºC to + 175ºC)
- F - Electroless nickel, - 85ºF to + 392ºF (-65ºC to + 200ºC)

CONTACT ARRANGEMENT
See pages 20 and 21.

CONTACT STYLE
- P - Pin
- S - Socket
- *A - Less Pin Contact
- *B - Less Socket Contact

*Used only when other than power contacts are to be installed (i.e. shielded, thermocouple, etc.)

POLARIZING POSITION
A, B, C, and D (no letter required for normal).
See page 19.

Note: To order MS connectors less standard power contacts, purchase order must state "Less Contacts".

ITT Nomenclature

Note KJ supplied with exact complement of contacts.

SERIES PREFIX
- KJ - Series II - Low Profile

SHELL STYLE
- 0 - Wall mounting receptacle
- 2 - Box mounting receptacle
- 3 - Wall mounting receptacle (back panel mounting)
- 5 - Box mounting receptacle (back panel mounting)
- 6 - Straight plug
- G6 - Straight plug, grounded
- 7 - Jam nut receptacle

CLASS
- E - Environment - resistant with rear accessory (without strain relief)
- F - Environment - resistant with strain relief accessory
- G - Environmental - resistant wall mount and jam nut receptacle and plug type. Space Grade.
- P - Environment - resistant with straight potting cup accessory
- R - Environment - resistant with full grommet seal without rear accessory; shell styles 2 and 5 only
- T - Environment - resistant (without rear accessory). (Class T not applicable to KJ2E, KJ2R, KJ5E and KJ5R.)

SHELL SIZE
8, 10, 12, 14, 16, 18, 20, 22, and 24.

HARDWARE FINISH STANDARD
- A - Bright cadmium over electroless nickel plate, - 85ºF to + 302ºF (- 65ºC to + 150ºC)
- B - Olive drab cadmium over electroless nickel plate, - 85ºF to + 347ºF (- 65ºC to + 175˚C)
- N - Electroless nickel, - 85ºF to + 392ºF (-65ºC to + 200ºC)
- Z - Zinc Nickel, Black
- - - (Dash) When using a finish modification code

CONTACT ARRANGMENT
See pages 20 and 21.

CONTACT STYLE
- P - Pin
- S - Socket

POLARIZING POSITION
N(normal), A, B, C, D, see page 19.

MODIFICATION CODE
- L - Less contacts, not stamped on connector
- 16 - Outgassed NASA space graded connector
- 27- Outgassed, standard connector
- A296 Black ZInc Cobalt, RoHS Compliant
- T69 Olive Drab (Green) Zinc Cobalt

Wall Mounting Receptacle

MS27472
(MS service class E, P, T)

KJ0

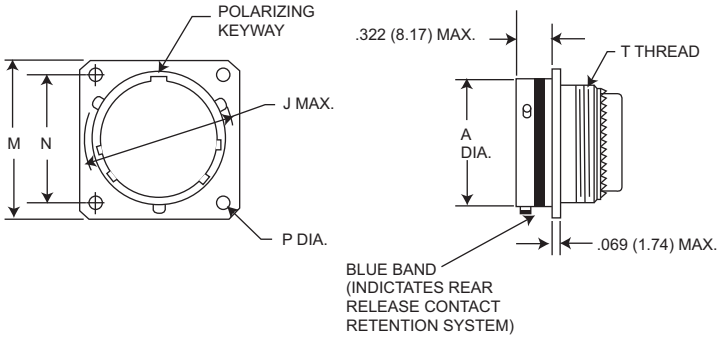

NOTE: For backshell dimensions and configurations, see pages 26 and 28.

Shell Size	A Dia. Max.	J Dia. Max.	M Max.	N T.P	P +.005 (0.13) -.010 (0.25)	T Thread	Overall length With Backshells E Straight	F Cable Clamp	P Potting Max.
8	.474 (12.04)	.563 (14.30)	.828 (21.03)	.594 (15.09)	.125 (3.18)	7/16-28UNEF-2A	.850 (21.59)	1.555 (39.50)	1.020 (25.91)
10	.591 (15.01)	.680 (17.27)	.954 (24.23)	.719 (18.26)	.125 (3.18)	9/16-24UNEF-2A	.850 (21.59)	1.555 (39.50)	1.020 (25.91)
12	.751 (19.08)	.859 (21.82)	1.047 (26.59)	.812 (20.62)	.125 (3.18)	11/16-24UNEF-2A	.850 (21.59)	1.555 (39.50)	1.020 (25.91)
14	.876 (22.25)	.984 (24.99)	1.141 (28.98)	.906 (23.01)	.125 (3.18)	13/16-20UNEF-2A	.850 (21.59)	1.790 (45.47)	1.020 (25.91)
16	1.001 (25.43)	1.108 (28.14)	1.234 (31.34)	.969 (24.61)	.125 (3.18)	15/16-20UNEF-2A	.850 (21.59)	1.790 (45.47)	1.020 (25.91)
18	1.126 (28.60)	1.233 (31.32)	1.328 (33.73)	1.062 (26.97)	.125 (3.18)	1-1/16-18UNEF-2A	.850 (21.59)	1.790 (45.47)	1.020 (25.91)
20	1.251 (31.78)	1.358 (34.49)	1.453 (36.91)	1.156 (27.36)	.125 (3.18)	1-3/16-18UNEF-2A	.850 (21.59)	1.790 (45.47)	1.020 (25.91)
22	1.376 (34.95)	1.483 (37.67)	1.578 (39.08)	1.250 (31.76)	.125 (3.18)	1-5/16-18UNEF-2A	.850 (21.59)	1.930 (49.02)	1.020 (25.91)
24	1.501 (38.13)	1.610 (40.89)	1.703 (43.26)	1.375 (34.92)	.152 (3.86)	1-7/16-18UNEF-2A	.850 (21.59)	1.900 (48.26)	1.080 (27.43)

Box Mounting Receptacle

MS27499E
(MS service class E)

KJ2E

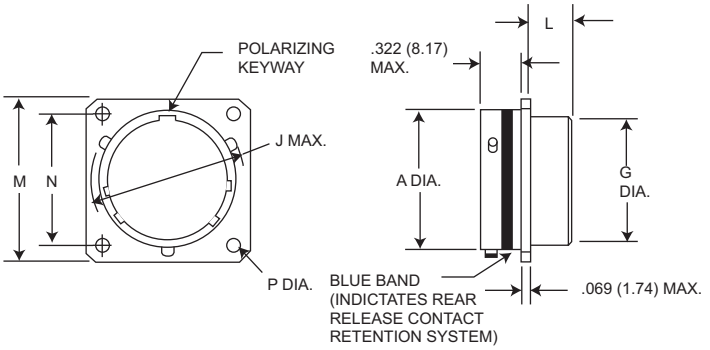

NOTE: This connector does not accommodate backshells

Shell Size	A Dia. Max.	G Dia. Max.	J Dia. Max.	L Max.	M Max.	N T.P.	P +.005 (0.13) -.010 (0.25)
8	.474 (12.04)	.421 (10.69)	.563 (14.30)	.312 (7.92)	.828 (21.03)	.594 (15.09)	.125 (3.18)
10	.591 (15.01)	.542 (13.77)	.680 (17.27)	.312 (7.92)	.954 (24.23)	.719 (18.26)	.125 (3.18)
12	.751 (19.08)	.667 (16.94)	.859 (21.82)	.312 (7.92)	1.047 (26.59)	.812 (20.62)	.125 (3.18)
14	.876 (22.25)	.791 (20.09)	.984 (24.99)	.312 (7.92)	1.141 (28.98)	.906 (23.01)	.125 (3.18)
16	1.001 (25.43)	.916 (23.27)	1.108 (28.14)	.312 (7.92)	1.234 (31.34)	.969 (24.61)	.125 (3.18)
18	1.126 (28.60)	1.034 (26.26)	1.233 (31.32)	.312 (7.92)	1.328 (33.73)	1.062 (26.97)	.125 (3.18)
20	1.251 (31.78)	1.158 (29.41)	1.358 (34.49)	.312 (7.92)	1.453 (36.81)	1.156 (27.36)	.125 (3.18)
22	1.376 (33.95)	1.283 (32.59)	1.483 (37.67)	.312 (7.92)	1.578 (40.08)	1.250 (31.75)	.125 (3.18)
24	1.501 (38.13)	1.408 (35.76)	1.610 (40.89)	.312 (7.92)	1.703 (43.26)	1.375 (34.93)	.152 (3.86)

Performance Specifications-Pages 3 and 4.
Contacts, Sealing Plugs, Assembly Tools - Pages 22, 28, and 29.
Contact Arrangements - Pages 20 and 21.

Dimensions shown in inches (mm)
Specifications and dimensions subject to change

Box Mounting Receptacle

MS27513E
(MS service class E)

KJ2R

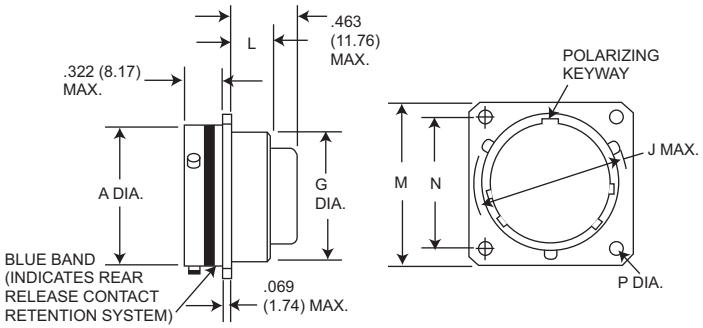

NOTE: This connector does not accommodate backshells

Shell Size	A Dia. Max.	G Dia. Max.	J Dia. Max.	L Max.	M Max.	N T.P.	P +.005 (0.13) -.010 (0.25)
8	.474 (12.04)	.421 (10.69)	.563 (14.30)	.312 (7.92)	.828 (21.03)	.594 (15.09)	.125 (3.18)
10	.591 (15.01)	.542 (13.77)	.680 (17.27)	.312 (7.92)	.954 (24.23)	.719 (18.26)	.125 (3.18)
12	.751 (19.08)	.667 (16.94)	.859 (21.82)	.312 (7.92)	1.047 (26.59)	.812 (20.62)	.125 (3.18)
14	.876 (22.25)	.791 (20.09)	.984 (24.99)	.312 (7.92)	1.141 (28.98)	.906 (23.01)	.125 (3.18)
16	1.001 (25.43)	.916 (23.27)	1.108 (28.14)	.312 (7.92)	1.234 (31.34)	.969 (24.61)	.125 (3.18)
18	1.126 (28.60)	1.034 (26.26)	1.233 (31.32)	.312 (7.92)	1.328 (33.73)	1.062 (26.97)	.125 (3.18)
20	1.251 (31.78)	1.158 (29.41)	1.358 (34.49)	.312 (7.92)	1.453 (36.81)	1.156 (27.36)	.125 (3.18)
22	1.376 (33.95)	1.283 (32.59)	1.483 (27.67)	.312 (7.92)	1.578 (40.08)	1.250 (31.75)	.125 (3.18)
24	1.501 (38.13)	1.408 (35.76)	1.610 (40.89)	.312 (7.92)	1.703 (43.26)	1.375 (34.93)	.152 (3.85)

Wall Mounting Receptacle

MS27497
(MS service class E, P, T)

KJ3

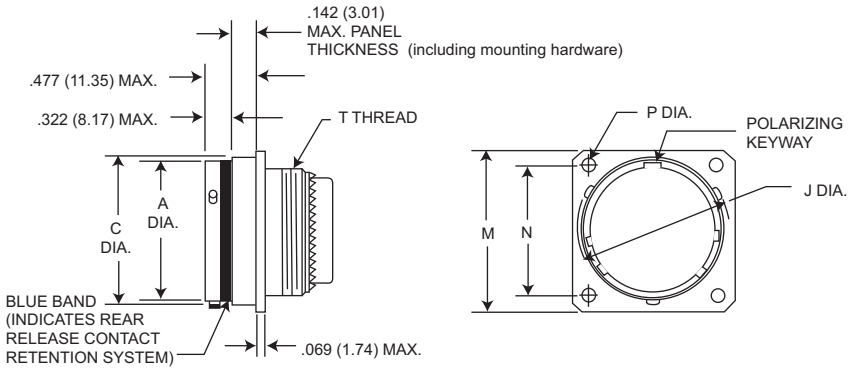

NOTE: For backshell dimensions and configurations, see pages A-30, A-32.

Shell Size	A Dia. Max.	C Dia. Max.	J Dia. Max.	M Max.	N T.P	P +.005 (0.13) -.010 (0.25)	T Thread	Overall Length With Backshells E Straight	F Cable Clamp	P Potting Max.
8	.474 (12.04)	.522 (13.26)	.563 (14.30)	.828 (21.03)	.594 (15.09)	.125 (3.18)	7/16-28UNEF-2A	.855 (21.72)	1.570 (39.88)	1.020 (25.91)
10	.591 (15.01)	.639 (16.23)	.680 (17.27)	.954 (24.23)	.719 (18.26)	.125 (3.18)	9/16-24UNEF-2A	.855 (21.72)	1.570 (39.88)	1.020 (25.91)
12	.751 (19.08)	.808 (20.52)	.859 (21.82)	1.047 (26.59)	.812 (20.62)	.125 (3.18)	11/16-24UNEF-2A	.855 (21.72)	1.570 (39.88)	1.020 (25.91)
14	.876 (22.25)	.935 (23.75)	.984 (24.99)	1.141 (28.98)	.906 (23.01)	.125 (3.18)	13/16-20UNEF-2A	.855 (21.72)	1.780 (45.21)	1.020 (25.91)
16	1.001 (25.43)	1.058 (26.87)	1.108 (28.14)	1.234 (31.34)	.969 (24.61)	.125 (3.18)	15/16-20UNEF-2A	.855 (21.72)	1.780 (45.21)	1.020 (25.91)
18	1.126 (28.60)	1.183 (30.05)	1.233 (31.32)	1.328 (33.73)	1.062 (26.97)	.125 (3.18)	1-1/16-18UNEF-2A	.855 (21.72)	1.780 (45.21)	1.020 (25.91)
20	1.251 (31.78)	1.308 (33.22)	1.358 (34.49)	1.453 (36.91)	1.156 (29.36)	.125 (3.18)	1-3/16-18UNEF-2A	.855 (21.72)	1.780 (45.21)	1.020 (25.91)
22	1.376 (34.95)	1.433 (36.40)	1.483 (37.67)	1.578 (40.08)	1.250 (31.75)	.125 (3.18)	1-5/16-18UNEF-2A	.855 (21.72)	1.960 (49.78)	1.020 (25.91)
24	1.501 (38.13)	1.568 (39.83)	1.610 (40.89)	1.703 (43.26)	1.375 (34.93)	.152 (3.86)	1-7/16-18UNEF-2A	.855 (21.72)	1.960 (49.78)	1.080 (27.43)

Performance Specifications-Pages 3 and 4.
Contacts, Sealing Plugs, Assembly Tools - Pages 22, 28, and 29.
Contact Arrangements - Pages 20 and 21.

Box Mounting Receptacle (Back Panel)

MS27508E
(MS service class E)

KJ5E

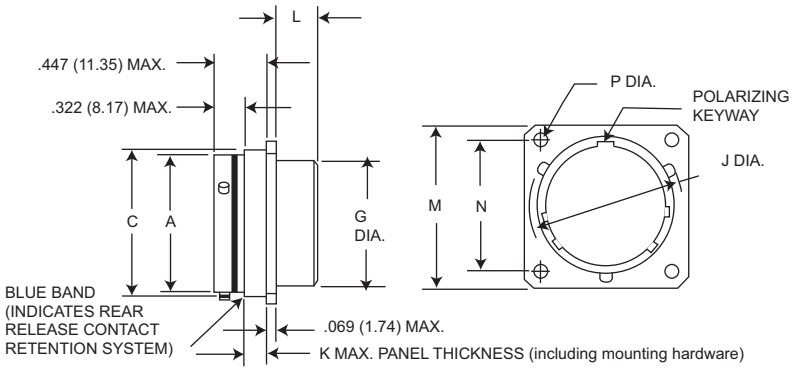

NOTE: This connector does not accommodate backshells

Shell Size	A Dia. Max.	C Dia. Max.	G Dia. Max.	J Dia. Max.	K Max.	L Max.	M Max.	N T.P	P +.005 (0.13) -.010 (0.25)
8	.474 (12.04)	.522 (13.26)	.421 (10.69)	.563 (14.30)	.147 (3.73)	.185 (4.70)	.828 (21.03)	.594 (15.09)	.125 (3.18)
10	.591 (15.01)	.639 (16.23)	.542 (13.77)	.680 (17.27)	.152 (3.86)	.185 (4.70)	.954 (24.23)	.719 (18.26)	.125 (3.18)
12	.751 (19.08)	.808 (20.52)	.667 (16.94)	.859 (21.82)	.152 (3.86)	.185 (4.70)	1.047 (26.59)	.812 (20.62)	.125 (3.18)
14	.876 (22.25)	.935 (23.75)	.791 (20.09)	.984 (24.99)	.152 (3.86)	.185 (4.70)	1.141 (28.98)	.906 (23.01)	.125 (3.18)
16	1.001 (25.42)	1.058 (26.87)	.916 (23.27)	1.108 (28.14)	.152 (3.86)	.185 (4.70)	1.234 (31.24)	.969 (24.61)	.125 (3.18)
18	1.126 (28.60)	1.183 (30.05)	1.034 (31.34)	1.233 (31.32)	.152 (3.86)	.185 (4.70)	1.328 (33.73)	1.062 (26.97)	.125 (3.18)
20	1.251 (31.77)	1.308 (33.22)	1.158 (34.52)	1.358 (34.49)	.179 (4.55)	.185 (4.70)	1.453 (36.91)	1.156 (29.36)	.125 (3.18)
22	1.376 (34.95)	1.433 (36.40)	1.283 (32.59)	1.483 (37.67)	.179 (4.55)	.185 (4.70)	1.578 (40.08)	1.250 (31.75)	.125 (3.18)
24	1.501 (38.13)	1.568 (39.83)	1.408 (35.76)	1.610 (40.89)	.169 (4.29)	.185 (4.70)	1.703 (43.66)	1.375 (34.92)	.152 (3.86)

Box Mounting Receptacle (Back Panel)

No MS part number

KJ5R

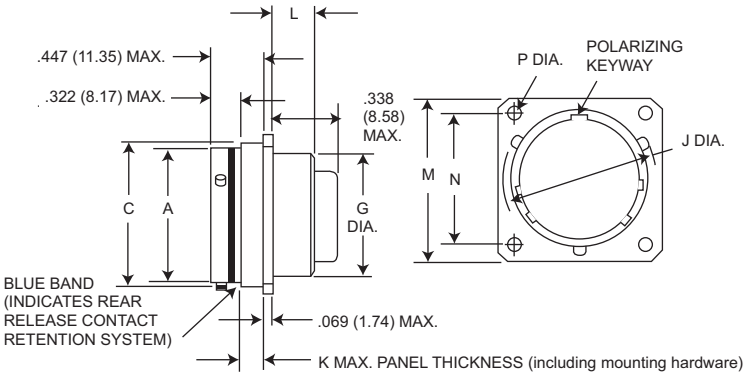

NOTE: This connector does not accommodate backshells

Shell Size	A Dia. Max.	C Dia. Max.	G Dia. Max.	J Dia. Max.	K Max.	L Max.	M Max.	N T.P	P +.005 (0.13) -.010 (0.25)
8	.474 (12.04)	.522 (13.26)	.421 (10.69)	.563 (14.30)	.147 (3.73)	.185 (4.70)	.828 (21.03)	.594 (15.09)	.125 (3.18)
10	.591 (15.01)	.639 (16.23)	.542 (13.77)	.680 (17.27)	.152 (3.86)	.185 (4.70)	.954 (24.23)	.719 (18.26)	.125 (3.18)
12	.751 (19.08)	.808 (20.52)	.667 (16.94)	.859 (21.82)	.152 (3.86)	.185 (4.70)	1.047 (26.59)	.812 (20.62)	.125 (3.18)
14	.876 (22.25)	.935 (23.75)	.791 (20.09)	.984 (24.99)	.152 (3.86)	.185 (4.70)	1.141 (28.98)	.906 (23.01)	.125 (3.18)
16	1.001 (25.42)	1.058 (26.87)	.916 (23.27)	1.108 (28.14)	.152 (3.86)	.185 (4.70)	1.234 (31.24)	.969 (24.61)	.125 (3.18)
18	1.126 (28.60)	1.183 (30.05)	1.034 (31.34)	1.233 (31.32)	.152 (3.86)	.185 (4.70)	1.328 (33.73)	1.062 (26.97)	.125 (3.18)
20	1.251 (31.77)	1.308 (33.22)	1.158 (34.52)	1.358 (34.49)	.179 (4.55)	.185 (4.70)	1.453 (36.91)	1.156 (29.36)	.125 (3.18)
22	1.376 (34.95)	1.433 (36.40)	1.283 (32.59)	1.483 (37.67)	.179 (4.55)	.185 (4.70)	1.578 (40.08)	1.250 (31.75)	.125 (3.18)
24	1.501 (38.13)	1.568 (39.83)	1.408 (35.76)	1.610 (40.89)	.169 (4.29)	.185 (4.70)	1.703 (43.66)	1.375 (34.92)	.152 (3.86)

Performance Specifications-Pages 3 and 4.
Contacts, Sealing Plugs, Assembly Tools - Pages 22, 28, and 29.
Contact Arrangements - Pages 20 and 21.

Dimensions shown in inches (mm)
Specifications and dimensions subject to change

Straight Plug

MS27473
(MS service class E, P, T)

KJ6

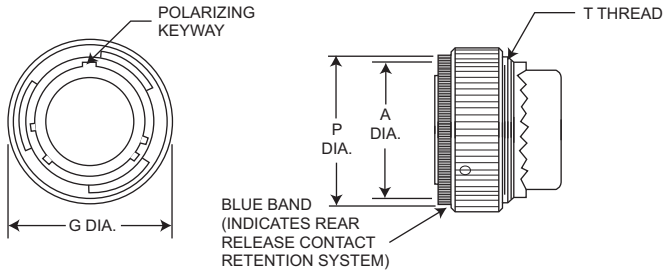

NOTE: For backshell dimensions and configurations, see pages 26 and 28.

Shell Size	A Dia. Max.	G Dia. Max.	P Dia. Max.	T Thread	Overall Length With Backshells E Straight	F Cable Clamp	P Potting Max.
8	.485 (12.32)	.749 (19.02)	.630 (16.00)	7/16-28UNEF-2A	1.026 (26.06)	1.555 (39.50)	1.020 (25.91)
10	.606 (15.39)	.858 (21.79)	.752 (19.10)	9/16-24UNEF-2A	1.026 (26.06)	1.555 (39.50)	1.020 (25.91)
12	.765 (19.43)	1.030 (26.16)	.925 (23.50)	11/16-24UNEF-2A	1.026 (26.06)	1.555 (39.50)	1.020 (25.91)
14	.890 (22.61)	1.155 (29.34)	1.050 (26.67)	13/16-20UNEF-2A	1.026 (26.06)	1.790 (45.47)	1.020 (25.91)
16	1.014 (25.76)	1.280 (32.51)	1.172 (29.77)	15/16-20UNEF-2A	1.026 (26.06)	1.790 (45.47)	1.020 (25.91)
18	1.140 (28.96)	1.405 (35.69)	1.304 (33.12)	1-1/16-18UNEF-2A	1.026 (26.06)	1.790 (45.47)	1.020 (25.91)
20	1.264 (32.11)	1.530 (38.86)	1.435 (36.45)	1-3/16-18UNEF-2A	1.026 (26.06)	1.790 (45.47)	1.020 (25.91)
22	1.389 (35.28)	1.640 (40.66)	1.560 (39.62)	1-5/16-18UNEF-2A	1.026 (26.06)	1.930 (49.02)	1.020 (25.91)
24	1.514 (38.46)	1.765 (44.83)	1.688 (42.88)	1-7/16-18UNEF-2A	1.104 (28.04)	1.930 (49.02)	1.080 (27.43)

Straight Plug Grounded

MS27484
(MS service class E, P, T)

KJG6

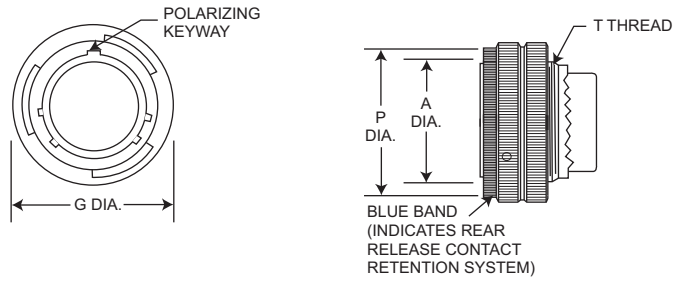

NOTE: For backshell dimensions and configurations, see pages 26 and 28.

Shell Size	A Dia. Max.	G Dia. Max.	P Dia. Max.	T Thread	Overall Length With Backshells E Straight	F Cable Clamp	P Potting Max.
8	.485 (12.32)	.749 (19.02)	.630 (16.00)	7/16-28UNEF-2A	1.026 (26.06)	1.555 (39.50)	1.020 (25.91)
10	.606 (15.39)	.858 (21.79)	.752 (19.10)	9/16-24UNEF-2A	1.026 (26.06)	1.555 (39.50)	1.020 (25.91)
12	.765 (19.43)	1.030 (26.16)	.925 (23.50)	11/16-24UNEF-2A	1.026 (26.06)	1.555 (39.50)	1.020 (25.91)
14	.890 (22.61)	1.155 (29.34)	1.050 (26.67)	13/16-20UNEF-2A	1.026 (26.06)	1.790 (45.47)	1.020 (25.91)
16	1.014 (25.76)	1.280 (32.51)	1.172 (29.77)	15/16-20UNEF-2A	1.026 (26.06)	1.790 (45.47)	1.020 (25.91)
18	1.140 (28.96)	1.405 (35.69)	1.304 (33.12)	1-1/16-18UNEF-2A	1.026 (26.06)	1.790 (45.47)	1.020 (25.91)
20	1.264 (32.11)	1.530 (38.86)	1.435 (36.45)	1-3/16-18UNEF-2A	1.026 (26.06)	1.790 (45.47)	1.020 (25.91)
22	1.389 (35.28)	1.640 (40.66)	1.560 (39.62)	1-5/16-18UNEF-2A	1.026 (26.06)	1.930 (49.02)	1.020 (25.91)
24	1.514 (38.46)	1.765 (44.83)	1.688 (42.88)	1-7/16-18UNEF-2A	1.104 (28.04)	1.930 (49.02)	1.080 (27.43)

Performance Specifications-Pages 3 and 4.
Contacts, Sealing Plugs, Assembly Tools - Pages 22, 28, and 29.
Contact Arrangements - Pages 20 and 21.

Jam Nut Receptacle

MS27474
(MS service class E, P, T)

KJ7

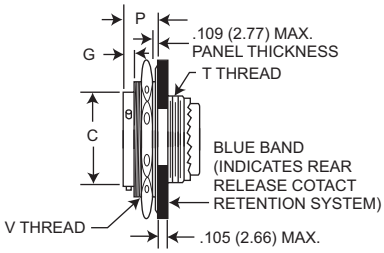

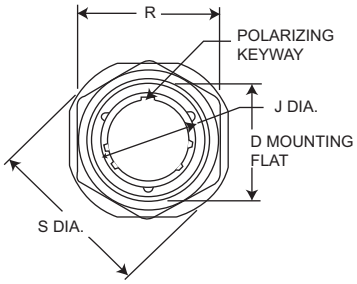

NOTE: For backshell dimensions and configurations, see pages 26 and 28.

Shell Size	C Dia. Max.	D Max.	G Max.	J Max.	P Max.	R Max. Hex.	S Dia. Max.	T Thread	V Thread	Overall length With Backshells E Straight	F Cable Clamp	P Potting Max.
8	.474 (12.04)	.818 (20.78)	.145 (3.68)	.563 (14.30)	.443 (11.25)	1.079 (27.41)	1.381 (35.08)	7/16-28UNEF-2A	7/8-20UNEF-2A	.840 (21.34)	1.555 (39.50)	1.020 (25.91)
10	.591 (15.01)	.942 (23.93)	.145 (3.68)	.680 (17.27)	.443 (11.25)	1.205 (30.61)	1.506 (38.25)	9/16-24UNEF-2A	1-20UNEF-2A	.840 (21.34)	1.555 (39.50)	1.020 (25.91)
12	.751 (19.08)	1.066 (27.08)	.145 (3.68)	.859 (21.82)	.443 (11.25)	1.329 (33.76)	1.631 (41.43)	11/16-24UNEF-2A	1-1/8-18UNEF-2A	.840 (21.34)	1.555 (39.50)	1.020 (25.91)
14	.876 (22.25)	1.191 (30.25)	.145 (3.68)	.984 (24.99)	.443 (11.25)	1.455 (36.96)	1.756 (44.60)	13/16-20UNEF-2A	1-1/4-18UNEF-2A	.840 (21.34)	1.790 (45.47)	1.020 (25.91)
16	1.001 (25.43)	1.321 (33.55)	.145 (3.68)	1.108 (28.14)	.443 (11.25)	1.579 (40.11)	1.944 (49.38)	1-15/16-20UNEF-2A	1-3/8-18UNEF-2A	.840 (21.34)	1.790 (45.47)	1.020 (25.91)
18	1.126 (28.60)	1.441 (36.60)	.145 (3.68)	1.233 (31.32)	.443 (11.25)	1.705 (43.31)	2.022 (51.36)	1-1/16-18UNEF-2A	1-1/2-18UNEF-2A	.840 (21.34)	1.790 (45.47)	1.020 (25.91)
20	1.251 (31.78)	1.566 (39.78)	.171 (4.34)	1.358 (34.49)	.469 (11.91)	1.829 (46.46)	2.147 (54.53)	1-3/16-18UNEF-2A	1-5/8-18UNEF-2A	.840 (21.34)	1.790 (45.47)	1.020 (25.91)
22	1.376 (33.95)	1.691 (42.95)	.171 (4.34)	1.483 (37.67)	.469 (11.91)	2.017 (51.23)	2.271 (57.68)	1-5/16-18UNEF-2A	1-3/4-18UNS-2A	.840 (21.34)	1.930 (49.02)	1.020 (25.91)
24	1.501 (38.13)	1.816 (46.13)	.171 (4.34)	1.610 (40.89)	.469 (11.91)	2.142 (54.41)	2.396 (60.86)	1-7/16-18UNEF-2A	1-7/8-18UNS-2A	.860 (21.84)	1.900(48.26)	1.080 (27.43)

Performance Specifications-Pages 3 and 4.
Contacts, Sealing Plugs, Assembly Tools - Pages 22, 28, and 29.
Contact Arrangements - Pages 20 and 21.

Panel Cutouts

Flange Mounted Receptacle

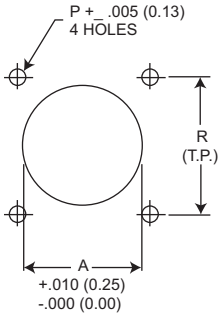

Jam Nut Receptacle

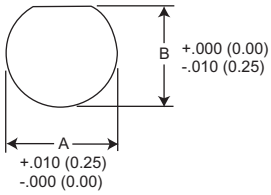

Shell Size	A Dia.	P Dia.	R	Mfg. Screw
8	.610 (15.49)	.125 (3.18)	.594 (15.09)	#4
10	.734 (18.64)	.125 (3.18)	.719 (18.26)	#4
12	.860 (21.84)	.125 (3.18)	.812 (20.62)	#4
14	.985 (25.02)	.125 (3.18)	.906 (23.01)	#4
16	1.110 (28.19)	.125 (3.18)	.969 (24.61)	#4
18	1.234 (31.34)	.125 (3.18)	1.062 (26.97)	#4
20	1.360 (35.54)	.125 (3.18)	1.156 (29.36)	#4
22	1.484 (37.69)	.125 (3.18)	1.250 (31.75)	#4
24	1.611 (40.92)	.152 (3.86)	1.375 (34.93)	#6

Shell Size	A Dia.	B Dia.
8	.885 (22.48)	.830 (21.08)
10	1.010 (25.65)	.955 (24.26)
12	1.135 (28.82)	1.085 (27.56)
14	1.260 (32.00)	1.210 (30.73)
16	1.385 (35.18)	1.335 (33.91)
18	1.510 (38.35)	1.460 (37.08)
20	1.635 (41.53)	1.585 (40.26)
22	1.760 (44.70)	1.710 (43.43)
24	1.885 (47.88)	1.835 (46.61)

Dimensions shown in inches (mm)
Specifications and dimensions subject to change

How To Order

Military Nomenclature

D38999 20 F C 35 A N

- CONNECTOR TYPE
- SHELL STYLE
- SERVICE CLASS (HARDWARE FINISH)
- SHELL SIZE
- CONTACT ARRANGEMENT
- CONTACT STYLE
- POLARIZING POSITION

CONNECTOR TYPE
D38999/ - MIL-DTL-38999 Series III

SHELL STYLE
D38999/20 - Wall mount receptacle
D38999/24 - Jam nut receptacle
D38999/26 - Straight Plug, Grounded

SERVICE CLASS
(Hardware Finish)
F - Electroless nickel - 85ºF to +392ºF (-65ºC to +200ºC)
G - Electroless nickel plated. Space Grade.
W - Olive drab cadmium over electroless nickel plate, -85ºF to +347ºF (-65ºC to +175ºC)

SHELL SIZE

A	B	C	D	E	F	G	H	J	Military Designation
9	11	13	15	17	19	21	23	25	Cannon Designation

CONTACT ARRANGEMENT
See pages 20, 21.

CONTACT STYLE
P - Pin conatcts
S - Socket contact
A - Less Pin contacts*
B - Less Socket contact*

* Used only when other than power contacts are to be installed (i,e., shielded, thermocouple, etc.)

POLARIZING POSITION
N (normal), A, B, C, D, E. See page 19.

Note: To order MS connectors less standard power contacts, purchase order must state "Less Contacts".

Cannon Nomenclature

KJA 0 T 13 F 35 P N L

- SERIES PREFIX
- SHELL STYLE
- CLASS
- SHELL SIZE
- HARDWARE FINISH
- CONTACT ARRANGEMENT
- CONTACT STYLE
- POLARIZING POSITION
- MODIFICATION CODE

SERIES PREFIX
KJA/KJB* - Series III - Scoop proof, threaded coupling

SHELL STYLE
0 - Wall mount receptacle
6 - Straight plug
7 - Jam nut receptacle

CLASS
T - Environment-resistant (without rear accessory)

* Consult factory for applicable layouts

SHELL SIZE

9	11	13	15	17	19	21	23	25	Cannon Designation
A	B	C	D	E	F	G	H	J	Military Designation

HARDWARE FINISH
F - Electroless nickel, - 85ºF to +392ºF (-65ºC to +200ºC)
G - Electroless nickel plated. Space Grade.
W - Olive drab cadmium over electroless nickel plate, -85ºF to +347ºF (-65ºC to +175ºC)
Z - Zinc Nickel, Black
- - (Dash) When using a finish modification code

CONTACT ARRANGEMENTS
See pages 20 and 21.

CONTACT STYLE
P -Pin contacts
S -Socket contacts

POLARIZING POSITION
N (normal) A, B, C, D, E. See page 19.

MODIFICATION CODE
L - Less contacts, not stamped on connector
16 - Outgassed
NASA space graded connector
27- Outgassed, standard connector
A296 Black Zinc Cobalt, RoHS Compliant
T69 Olive Drab (Green) Zinc Cobalt

Wall Mount Receptacle

D38999/20

KJA0T

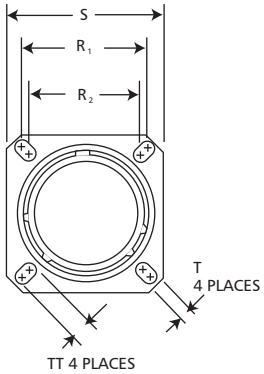

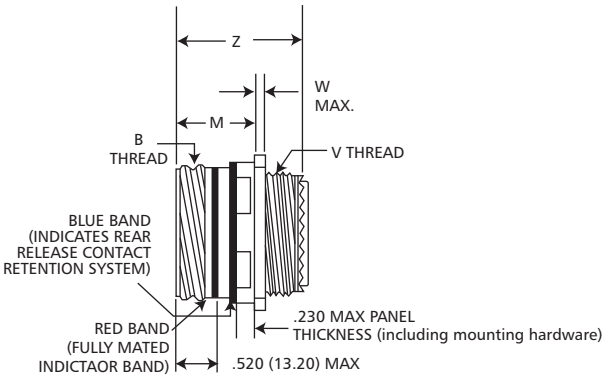

Shell Size	MS Shell size Code	B Thread Class 2A (Plated)	M +.000 (.000) -.005 (.130)	R 1	R 2	S +_.012 (.300)	T +.004 (.100) -.002 (.050)	TT +.004 (.100) -.002 (.050)	Metric V Thread (Plated)	W Max.	Z +.005 (.130) -.010 (.250)
9	A	.6250-0.1P-0.3L-TS	.820 (20.83)	.719 (18.26)	.594 (15.09)	.938 (23.83)	.128 (3.25)	.216 (5.49)	M12X1-6g0.100R	.098 (2.50)	1.235 (31.36)
11	B	.7500-0.1P-0.3L-TS	.820 (20.83)	.812 (20.62)	.719 (18.26)	1.031 (26.19)	.128 (3.25)	.194 (4.93)	M15X1-6g0.100R	.098 (2.50)	1.235 (31.36)
13	C	.8750-0.1P-0.3L-TS	.820 (20.83)	.906 (23.01)	.812 (20.62)	1.125 (28.58)	.128 (3.25)	.194 (4.93)	M18X1-6g0.100R	.098 (2.50)	1.235 (31.36)
15	D	1.0000-0.1P-0.3L-TS	.820 (20.83)	.969 (24.61)	.906 (23.01)	1.219 (30.96)	.128 (3.25)	.173 (4.39)	M22X1-6g0.100R	.098 (2.50)	1.235 (31.36)
17	E	1.1875-0.1P-0.3L-TS	.820 (20.83)	1.062 (26.97)	.969 (24.61)	1.312 (33.32)	.128 (3.25)	.194 (4.93)	M25X1-6g0.100R	.098 (2.50)	1.235 (31.36)
19	F	1.2500-0.1P-0.3L-TS	.820 (20.83)	1.156 (29.36)	1.062 (26.97)	1.438 (36.53)	.128 (3.25)	.194 (4.93)	M28X1-6g0.100R	.098 (2.50)	1.235 (31.36)
21	G	1.3750-0.1P-0.3L-TS	.790 (20.07)	1.250 (31.75)	1.156 (29.36)	1.562 (39.67)	.128 (3.25)	.194 (4.93)	M31X1-6g0.100R	.126 (3.20)	1.235 (31.36)
23	H	1.5000-0.1P-0.3L-TS	.790 (20.07)	1.375 (34.92)	1.250 (31.75)	1.688 (42.88)	.154 (3.91)	.242 (6.15)	M34X1-6g0.100R	.126 (3.20)	1.235 (31.36)
25	J	1.6250-0.1P-0.3L-TS	.790 (20.07)	1.500 (38.10)	1.375 (34.92)	1.812 (46.02)	.154 (3.91)	.242 (6.15)	M37X1-6g0.100R	.126 (3.20)	1.235 (31.36)

Straight Plug Grounded

D38999/26

KJA6T

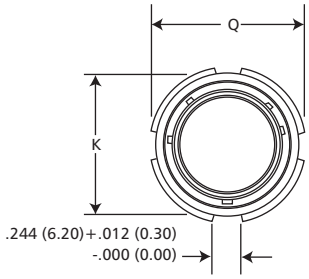

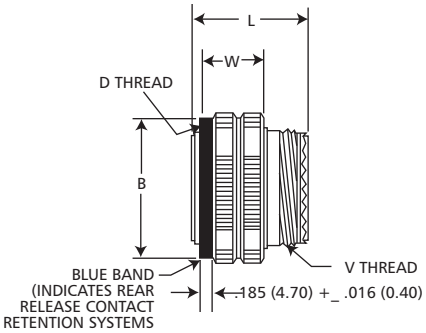

Shell Size	MS Shell size Code	B +.008 (.200) -.000 (.000)	D Thread Class 2B (Plated)	K Max.	L Max.	Q Dia Max.	Metric V Thread (Plated)	W +.008 (.200) -.004 (.100)
9	A	.724 (18.40)	.6250-0.1P-0.3L-TS	.748 (19.00)	1.234 (31.34)	.859 (21.82)	M12X1-6g0.100R	.760 (19.30)
11	B	.831 (21.10)	.7500-0.1P-0.3L-TS	.862 (21.90)	1.234 (31.34)	.969 (24.61)	M15X1-6g0.100R	.760 (19.30)
13	C	1.000 (25.40)	.8750-0.1P-0.3L-TS	1.027 (26.10)	1.234 (31.34)	1.141 (28.98)	M18X1-6g0.100R	.760 (19.30)
15	D	1.130 (28.70)	1.0000-0.1P-0.3L-TS	1.153 (29.30)	1.234 (31.34)	1.266 (32.16)	M22X1-6g0.100R	.760 (19.30)
17	E	1.268 (32.20)	1.1875-0.1P-0.3L-TS	1.291 (32.80)	1.234 (31.34)	1.391 (35.53)	M25X1-6g0.100R	.760 (19.30)
19	F	1.374 (34.90)	1.2500-0.1P-0.3L-TS	1.398 (35.50)	1.234 (31.34)	1.500 (38.10)	M28X1-6g0.100R	.760 (19.30)
21	G	1.500 (38.10)	1.3750-0.1P-0.3L-TS	1.524 (38.70)	1.234 (31.34)	1.625 (41.28)	M31X1-6g0.100R	.760 (19.30)
23	H	1.618 (41.40)	1.5000-0.1P-0.3L-TS	1.642 (41.70)	1.234 (31.34)	1.750 (44.45)	M34X1-6g0.100R	.760 (19.30)
25	J	1.744 (44.30)	1.6250-0.1P-0.3L-TS	1.768 (44.90)	1.234 (31.34)	1.875 (47.62)	M37X1-6g0.100R	.760 (19.30)

Performance Specifications-Pages 3 and 4.
Contacts, Sealing Plugs, Assembly Tools - Pages 22, 28, and 29.
Contact Arrangements - Pages 20 and 21.

Dimensions shown in inches (mm)
Specifications and dimensions subject to change

Jam Nut Receptacle

D38999/24 KJA7T

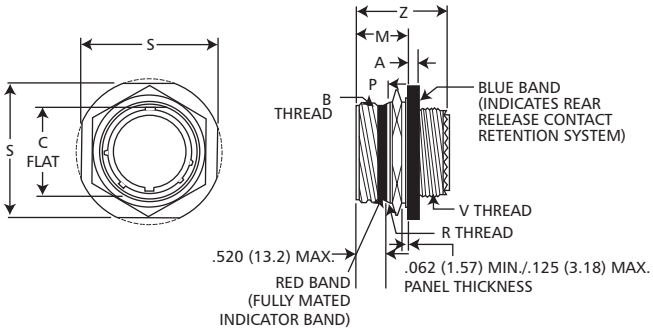

Shell Size	MS Shell size Code	A +.010 (.250) -.005 (.130)	B Thread Class 2A (Plated)	C +.004 (.100) -.010 (.250)	Z +.005 (.130) -.040 (.100)	M +.005 (.130) -.004 (.100)	P +.016 (.410) -.004 (.100)	S	Metric R Thread (Plated)	Metric V Thread (Plated)
9	A	.104 (2.64)	.6250-0.1P-0.3L-TS	.651 (16.53)	1.243 (31.57)	.871 (22.12)	.555 (14.10)	1.062 (26.97)	M17X1-6g0.100R	M12X1-6g0.100R
11	B	.104 (2.64)	.7500-0.1P-0.3L-TS	.751 (19.07)	1.243 (31.57)	.871 (22.12)	.555 (14.10)	1.250 (31.75)	M20X1-6g0.100R	M15X1-6g0.100R
13	C	.104 (2.64)	.8750-0.1P-0.3L-TS	.938 (23.82)	1.243 (31.57)	.878 (22.30)	.563 (14.30)	1.375 (34.92)	M25X1-6g0.100R	M18X1-6g0.100R
15	D	.104 (2.64)	1.0000-0.1P-0.3L-TS	1.062 (26.97)	1.243 (31.57)	.878 (22.30)	.563 (14.30)	1.500 (38.10)	M28X1-6g0.100R	M22X1-6g0.100R
17	E	.104 (2.64)	1.1875-0.1P-0.3L-TS	1.187 (30.15)	1.243 (31.57)	.878 (22.30)	.563 (14.30)	1.625 (41.28)	M32X1-6g0.100R	M25X1-6g0.100R
19	F	.135 (3.43)	1.2500-0.1P-0.3L-TS	1.312 (33.32)	1.243 (31.57)	.878 (22.30)	.563 (14.30)	1.812 (46.02)	M35X1-6g0.100R	M28X1-6g0.100R
21	G	.135 (3.43)	1.3750-0.1P-0.3L-TS	1.437 (36.50)	1.243 (31.57)	.878 (22.30)	.563 (14.30)	1.938 (49.23)	M38X1-6g0.100R	M31X1-6g0.100R
23	H	.135 (3.43)	1.5000-0.1P-0.3L-TS	1.562 (39.67)	1.243 (31.57)	.878 (22.30)	.563 (14.30)	2.062 (52.37)	M41X1-6g0.100R	M34X1-6g0.100R
25	J	.135 (3.43)	1.6250-0.1P-0.3L-TS	1.687 (42.85)	1.243 (31.57)	.878 (22.30)	.563 (14.30)	2.188 (55.38)	M44X1-6g0.100R	M37X1-6g0.100R

Performance Specifications-Pages 3 and 4.
Contacts, Sealing Plugs, Assembly Tools - Pages 22, 28, and 29.
Contact Arrangements - Pages 20 and 21.

Panel Cutouts

Wall Mounted Receptacle

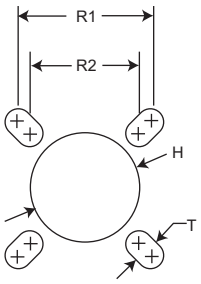

Jam Nut Receptacle

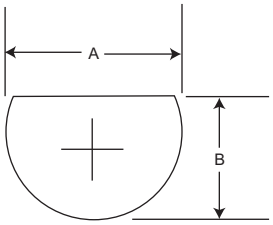

Shell Size	A +.010 (.25) -.000 (.00)	B +.000 (.00) -.010 (.25)	H +.010 (.25) -.000 (.00)	R1 (TP)	R2 (TP)	T (Max.)
9	.700 (17.78)	.670 (17.02)	.626 (15.90)	.719 (18.26)	.594 (15.09)	.134 (3.40)
11	.825 (20.96)	.771 (19.58)	.751 (19.08)	.812 (20.62)	.719 (18.26)	.134 (3.40)
13	1.010 (25.65)	.955 (24.26)	.876 (22.25)	.906 (23.01)	.812 (20.62)	.134 (3.40)
15	1.135 (28.83)	1.085 (27.56)	1.001 (25.43)	.969 (24.61)	.906 (23.01)	.134 (3.40)
17	1.260 (32.00)	1.210 (30.73)	1.188 (30.18)	1.062 (26.97)	.969 (24.61)	.134 (3.40)
19	1.385 (35.18)	1.335 (33.91)	1.251 (31.78)	1.156 (29.36)	1.062 (26.97)	.134 (3.40)
21	1.510 (38.35)	1.460 (37.08)	1.376 (34.95)	1.250 (31.75)	1.156 (29.36)	.134 (3.40)
23	1.635 (41.53)	1.585 (40.26)	1.511 (38.38)	1.375 (34.92)	1.250 (31.75)	.160 (4.06)
25	1.760 (44.70)	1.710 (43.43)	1.626 (41.30)	1.500 (38.10)	1.375 (34.92)	.160 (4.06)

Polarizing Positions

Series I

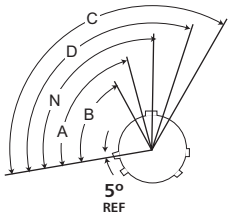

Front face of receptacle (plug opposite). Insert arrangement does not rotate with main key-keyway. The master key is rotated to provide shell polarization; the minor keys remain fixed.

Shell Size	Angle of Rotation (Degrees) Normal	A	B	C	D
9	95º	77º			113º
11	95º	81º	67º	123º	109º
13	95º	75º	63º	127º	115º
15	95º	74º	61º	129º	116º
17	95º	77º	65º	125º	113º
19	95º	77º	65º	125º	113º
21	95º	77º	65º	125º	113º
23	95º	80º	69º	121º	110º
25	95º	80º	69º	121º	110º

Series II

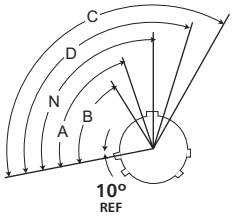

Front face of receptacle (plug opposite). Insert arrangement does not rotate with main key-keyway. The master key is rotated to provide shell polarization; the minor keys remain fixed.

Shell Size	Angle of Rotation (Degrees) Normal	A	B	C	D
8	100º	82º			118º
10	100º	86º	72º	128º	114º
12	100º	80º	68º	132º	120º
14	100º	79º	66º	134º	121º
16	100º	82º	70º	130º	118º
18	100º	82º	70º	130º	118º
20	100º	82º	70º	130º	118º
22	100º	85º	74º	126º	115º
24	100º	85º	74º	126º	115º

Series III

RECEPTACLE
(Front face shown)

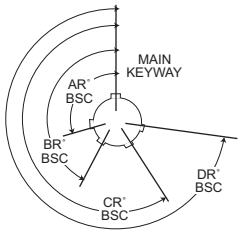

PLUG
(Front face shown)

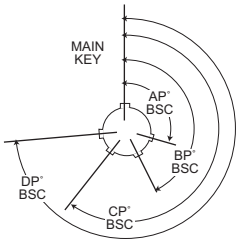

Shell Size	Key & Keyway Arrangement identification Letter	Key Locations AR° or AP° BSC	BR° or BP° BSC	CR° or CP° BSC	DR° or DP° BSC
9	N	105	140	215	265
	A	102	132	248	320
	B	80	118	230	312
	C	35	140	205	275
	D	64	155	234	304
	E	91	131	197	240
11 and 13 and 15	N	95	141	208	236
	A	113	156	182	292
	B	90	145	195	252
	C	53	156	220	255
	D	119	146	176	298
	E	51	141	184	242
17 and 19	N	80	142	196	293
	A	135	170	200	310
	B	49	169	200	244
	C	66	140	200	257
	D	62	145	180	280
	E	79	153	197	272
21 23 and 25	N	80	142	196	293
	A	135	170	200	310
	B	49	169	200	244
	C	66	140	200	257
	D	62	145	180	280
	E	79	153	197	272

NOTES

1. All Angles are BSC
2. The insert arrangement does not rotate with main key/keyway
3. All minor keys are rotated to provide shell polarization, the master key remains fixed at twelve o'clock position.
4. Polarization is different from Series I and II.

Contact Arrangements (Engaging View Pin Insert)

* Socket insert only
** Pin insert only (Not available in socket insert Series I and III)

Indicates layouts are available in all shell styles including MS27499, MS27508, KJ2E and KJ5E
† Consult factory MS27505E/KJL5E insert availability

Series III	9-98	9-35	-	11-5	11-98	-	11-35	-	-	13-8
Series II	8-98†	8-35†	-	10-5†	10-98†	10-99†	10-35†	12-3	12-4†	12-8†
Series I	9-98	9-35	11-4	11-5	11-98	11-99	11-35	-	13-4**	13-8
No. of Contacts	3 #20	6 #22D	4 #20	5 #20	6 #20	7 #20	13 #22D	3 #16	4 #16	8 #20
Service Ratings	I	M	I	I	I	I	M	II	I	I

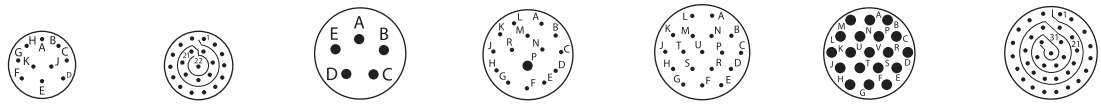

Series III	13-98	13-35	15-5	15-15	15-18	15-19	15-35
Series II	12-98†	12-35†	14-5†	14-15†	14-18†	-	14-35†
Series I	13-98	13-35	15-5	15-15	15-18	15-19	15-35
No. of Contacts	10 #20	22 #22D	5 #16	14 #20,1 #16	18 #20	19 #20	37 #22D
Service Ratings	I	M	II	I	I	I	M

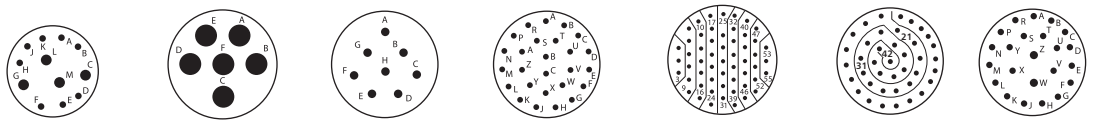

Series III	15-97	17-6	17-8	17-26	17-35	–	-
Series II	14-97†	16-6	16-8†	17-26†	16-35†	16-42†	16-99†
Series I	15-97	17-6	17-8	17-26	17-35	–	17-99**
No. of Contacts	8 #20,4 #16	6 #12	8 #16	26 #20	55 #22D	42 #22	21 #20,2 #16
Service Ratings	I	I	II	I	M	M	I

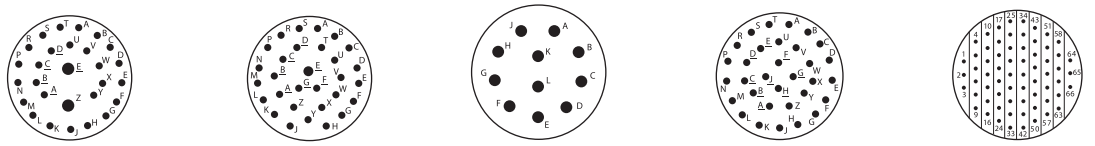

Series III	-	-	19-11	19-32	19-35
Series II	18-28	18-30	18-11	18-32†	18-35†
Series I	19-28**	19-30**	19-11	19-32	19-35
No. of Contacts	26 #20,2 #16	29 #20, 1 #16	11 #16	32 #20	66 #22D
Service Ratings	I	I	II	I	M

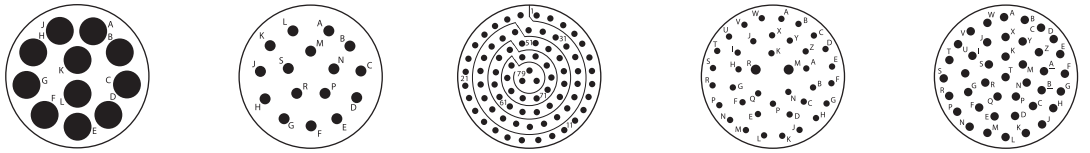

Series III	21-11	21-16	21-35	21-39	21-41
Series II	-	20-16†	20-35†	20-39†	20-41†
Series I	21-11	21-16	21-35	21-39	21-41
No. of Contacts	11 #12	16 #16	79 #22D	37 #20,2 #16	41- #20
Service Ratings	I	II	M	I	I

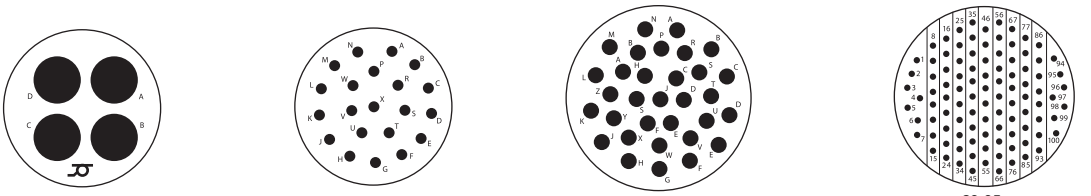

Series III	21-75	23-21	-		23-35
Series II	-	22-21	22-32		22-35†
Series I	21-75*•	23-21	23-32**		23-35
No. of Contacts	4 #8 Twinax	21 #16	32 #20		100 #22D
Service Ratings	M	II	I		M

Contact Arrangements (Engaging View Pin Insert)

* Socket insert only
** Pin insert only (Not available in socket insert Series I and III

† Indicates layouts are available in all shell styles including MS27499, MS27508, KJ2E and KJ5E
• Consult factory for MS27505E/KJL5E insert availability

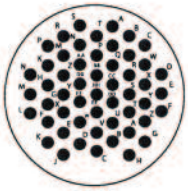
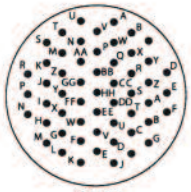
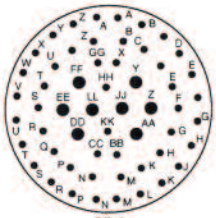

Series III	23-53	23-55	25-4
Series II	22-53†	22-55†	24-4†
Series I	23-53	23-55	25-4
No. of Contacts	53 #20	55 #20	48 #20,8 #16
Service Ratings	I	I	I

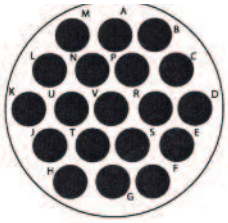
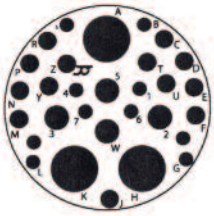
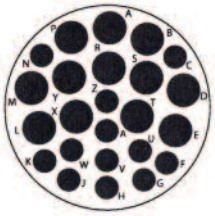
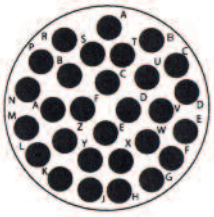

Series III	25-8	25-19	25-20	25-24	25-29
Series II	-	-	-	24-24†	24-29†
Series I	25-8*•	25-19	25-20•	25-24	25-29
No. of Contacts	8 #8 Twinax	19 #12	3 #8 Twinax, 13 #16, 4 #12 Coax, 10 #20	12 #16,12 #12	29 #16
Service Ratings	Twinax	I	N / Coax / Twinax	I	I

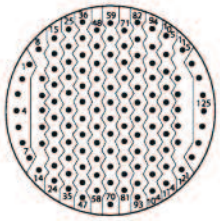
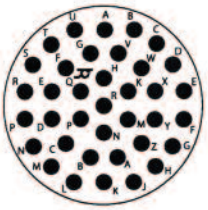

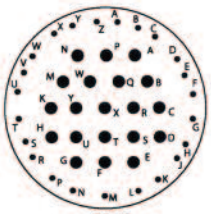

Series III	25-35	25-37	25-42	25-43	25-46
Series II	24-35†	-	-	-	-
Series I	25-35	25-37•	25-42•	25-43	25-46
No. of Contacts	128 #22D	37 #16	38 #20,4 #8 Coax	23 #20,20 #16	40 #20,4 #16,2 #8
Service Ratings	M	II	I, Coax	I	Twinax

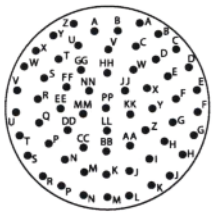
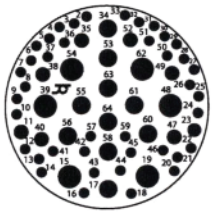
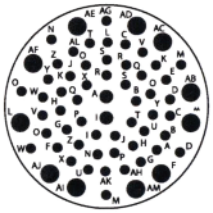

Series III	25-61	25-64	25-66*
Series II	24-61†	-	-
Series I	25-61	25-64	25-66•
No. of Contacts	61 #20	40 #22D,8 #20 10 #16,6 #12	53 #22D,2 #20,11 #16
Service Rating	I	I	I

Dimensions shown in inches (mm)
Specifications and dimensions subject to change

Contacts-Pin (Series I/II/III)

MIL-C-39029/58 **KJL/KJ/KJA**

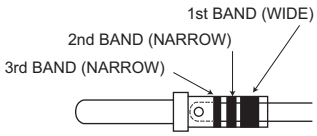

Contact Size	Color Bands 1	2	3	Cannon Part Number	M39029 Military Part Number
22D	Orange	Blue	Black	980-0008-878	M39029/58-360
20	Orange	Blue	Orange	980-0008-879	M39029/58-363
16	Orange	Blue	Yellow	980-0008-880	M39029/58-364
12	Orange	Blue	Green	980-0008-881	M39029/58-365

Contact Size		Cannon Part Number	Cable Accomodations
8 Coax	95 Ohms	249-2196-000	RG-180
		249-2196-001	RG-174, 179, 316
		249-2196-002	RG-142
8 Twinax	75 Ohms	980-1000-012	M17/176-00002
12 Coax		980-1000-016	RG-174, 179, 316

Contacts-Socket (Series II)

MIL-C-39029/57 **KJ**

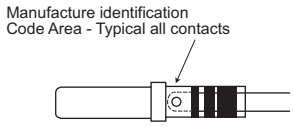

Contact Size	Color Bands 1	2	3	Cannon Part Number	M39029 Military Part Number
22D	Orange	Green	Yellow	980-0008-874	M39029/57-354
20	Orange	Green	Violet	980-0008-875	M39029/57-357
16	Orange	Green	Gray	980-0008-876	M39029/57-358
12	Orange	Green	White	980-0008-877	M39029/57-359

Contacts-Socket (Series I & III)

MIL-C-39029/56 **KJL/KJA**

Contact Size	Color Bands 1	2	3	Cannon Part Number	M39029 Military Part Number
22D	Orange	Yellow	Gray	980-0008-870	M39029/56-348
20	Orange	Green	Brown	980-0008-871	M39029/56-351
16	Orange	Green	Red	980-0008-872	M39029/56-352
12	Orange	Green	Orange	980-0008-873	M39029/56-353

Contact Size		Cannon Part Number	Cable Accomodations
8 Coax	95 Ohms	249-2195-000	RG-180
		249-2195-001	RG-174, 179, 316
		249-2195-002	RG-142
8 Twinax	75 Ohms	980-1000-013	M17/176-00002
12 Coax		980-1000-015	RG-174, 179, 316

Contact Sealing Bushings

Size 8 Twinax Sealing Bushing 321-1035-000
Used with the Twinax contact in Twinax layouts for sealing cable size M17/176-00002

Size 8 Coax Sealing Bushing 321-1034-001
Used with the Coax contact in Twinax layouts for sealing cable size RG-180

Twinax Grommet

Coax Grommet

Contact Sealing Bushing Sequence into Twinax Grommet

(Bushing only used with Twinax grommet)

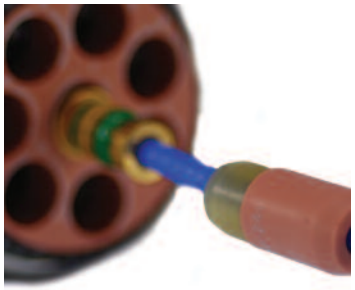

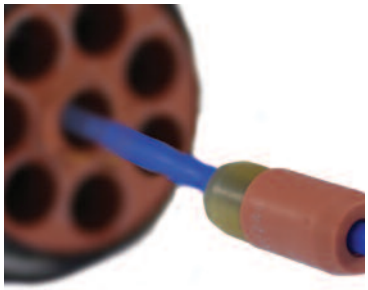

Dimensions shown in inches (mm)
Specifications and dimensions subject to change

Contacts-Printed Circuit Board

PIN PRINTED CIRCUIT CONTACT EXTENSION FROM REAR OF CONNECTOR (MAX / MIN)

PC CONTACT PART NUMBER	CONTACT SIZE	TAIL DIA. ±.001	MS27466 MS27467 KJL0 / KJL6	MS27656 MS27468 KJL3 / KJL7	MS27505E KJL5E	MS27472 MS27474 KJ0 / KJ7	MS27499E MS27508E KJ2E / KJ5E	MS27513E MS27497 / NO MS KJ2R / KJ3 / KJ5R	MS27473 MS27484 KJ6 / KJG6	D38999/20 KJA0	D38999/26 KJA6	D38999/24 KJA7 (9-17)	D38999/24 KJA7 (19-25)
030-2097-002	22D	0.020	0.261 0.189	0.244 0.176	0.408 0.376	0.264 0.226	0.408 0.376	0.264 0.226	0.264 0.226	0.262 0.200	0.266 0.194	0.280 0.216	0.258 0.198
030-2097-006	22D	0.020	0.069 N/A	0.052 N/A	0.216 0.184	0.072 0.034	0.216 0.184	0.072 0.034	0.072 0.034	0.070 0.008	0.074 0.002	0.088 0.024	0.066 0.006
030-2097-008	22D	0.020	0.216 0.144	0.199 0.131	0.363 0.331	0.219 0.181	0.363 0.331	0.219 0.181	0.219 0.181	0.217 0.155	0.221 0.149	0.235 0.171	0.213 0.153
030-2097-015	22D	0.020	0.293 0.221	0.276 0.208	0.440 0.408	0.296 0.258	0.440 0.408	0.296 0.258	0.296 0.258	0.294 0.232	0.298 0.226	0.312 0.248	0.290 0.230
030-1997-006	20	0.025	0.166 0.094	0.149 0.081	0.313 0.281	0.169 0.131	0.313 0.281	0.169 0.131	0.169 0.131	0.167 0.105	0.171 0.099	0.185 0.121	0.163 0.103
030-1997-022	20	0.025	0.281 0.209	0.264 0.196	0.428* 0.396*	0.284 0.246	0.428* 0.396*	0.284 0.246	0.284 0.246	0.282 0.220	0.286 0.214	0.300 0.236	0.278 0.218
030-1997-030	20	0.019	0.364 0.292	0.347 0.279	0.511 0.479	0.367 0.329	0.511 0.479	0.367 0.329	0.367 0.329	0.365 0.303	0.369 0.297	0.383 0.319	0.361 0.301
030-1995-023	16	0.062	0.278 0.206	0.261 0.193	0.425 0.393	0.281 0.243	0.425 0.393	0.281 0.243	0.281 0.243	0.279 0.217	0.283 0.211	0.297 0.233	0.275 0.215
030-1995-024	16	0.062	0.118 0.046	0.101 0.033	0.265 0.233	0.121 0.083	0.265 0.233	0.121 0.083	0.121 0.083	0.119 0.057	0.123 0.051	0.137 0.073	0.115 0.055

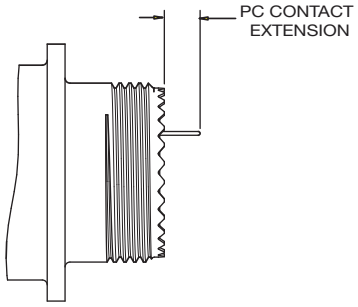

(KJL0/3/6/7 & KJA0/6/7)

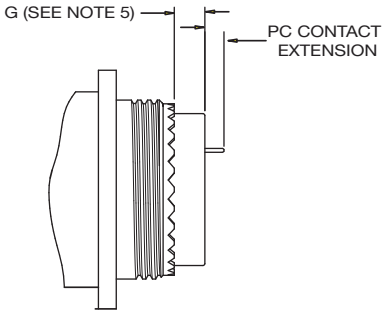

(KJL5E, KJ0/2E/2R/3/5E/5R/6/7, & KJG6)

SOCKET (SERIES II) PRINTED CIRCUIT CONTACT EXTENSION FROM REAR OF CONNECTOR (MAX / MIN)

PC CONTACT PART NUMBER	CONTACT SIZE	TAIL DIA. ±.001	MS27472 MS27474 KJ0 / KJ7	MS27499E MS27508E KJ2E / KJ5E	MS27513E MS27497 / NO MS KJ2R / KJ3 / KJ5R	MS27473 MS27484 KJ6 / KJG6
031-1186-006	22D	0.020	0.179 0.141	0.323 0.291	0.179 0.141	0.179 0.141
031-1186-011	22D	0.020	0.109 0.071	0.253 0.221	0.109 0.071	0.109 0.071
031-1186-013	22D	0.020	0.217 0.179	0.361 0.329	0.217 0.179	0.217 0.179
031-1186-021	22D	0.020	0.262 0.224	0.406 0.374	0.262 0.224	0.262 0.224
031-1124-021	20	0.025	0.247 0.209	0.391* 0.359*	0.247 0.209	0.247 0.209
031-1123-007	16	0.062	0.101 0.063	0.245 0.213	0.101 0.063	0.101 0.063

SOCKET (SERIE I & III) PRINTED CIRCUIT CONTACT EXTENSION FROM REAR OF CONNECTOR (MAX / MIN)

PC CONTACT PART NUMBER	CONTACT SIZE	TAIL DIA. ±.001	MS27466 MS27467 KJL0 / KJL6	MS27656 MS27468 KJL3 / KJL7	MS27505E KJL5E	D38999/20 KJA0	D38999/26 KJA6	D38999/24 KJA7 (9-17)	D38999/24 KJA7 (19-25)
031-1147-014	22D	0.021	0.244 0.172	0.227 0.159	0.391* 0.359*	0.245 0.183	0.249 0.177	0.263 0.199	0.241 0.181
031-1147-039	22D	0.020	0.168 0.096	0.151 0.083	0.315* 0.283*	0.169 0.107	0.173 0.101	0.187 0.123	0.165 0.105
031-1147-040	22D	0.020	0.438 0.366	0.421 0.353	0.585* 0.553*	0.439 0.377	0.443 0.371	0.457 0.393	0.435 0.375
031-1124-040	20	0.025	0.486 0.414	0.469 0.401	0.633 0.601	0.487 0.425	0.491 0.419	0.505 0.441	0.483 0.423
031-1123-020	16	0.029	0.272 0.200	0.255 0.187	0.419 0.387	0.273 0.211	0.277 0.205	0.291 0.227	0.269 0.209

NOTES: UNLESS OTHERWISE SPECIFIED.

1. PC CONTACTS HAVE GOLD PLATING OVER SUITABLE UNDERPLATE PER MIL-C-39029 SPECIFICATION.
2. PC CONTACT EXTENSIONS APPLY TO ITT CANNON CONNECTORS ONLY FOR ALL SHELL SIZES.
3. N/A INDICATES NO EXTENSION.
4. * INDICATES PC TAIL WITH STEP EXTENDING FROM REAR OF CONNECTOR.
5. G DIM. IS .031 +/- .016 FOR KJL5E AND .120 +/- .030 (SHELL SIZES 8 THRU 22) AND .090 +/- .050 (SHELL SIZE 24) FOR KJ0/2E/2R/3/5E/5R/6/7 & KJG6.
6. FOR OTHER SPECIFIC PC CONTACT DATA, CONSULT ITT EC, SANTA ANA, CA, USA.

Wire Sizes and Diameters

Contact Size	Wire size (AWG)	Finished wire outside dimensions	
		Minimum	Maximum
22D	28, 26, 24, 22	0.030	0.054
22M*	28, 26, 24	0.030	0.050
22*	26, 24, 22	0.034	0.060
20	24, 22, 20	0.040	0.083
16	20, 18, 16	0.065	0.109
12	14, 12	0.097	0.142
8 Coax	RG-180	0.136	0.146
8 Twinax	M17/176-00002	0.124	0.134
12 Coax	RG174, 179, 316	0.094	0.102

*For reference only

Recommended Jam Nut Torque Values

Series II		Series I & III	
Shell Size	Inch-Pounds	Shell Size	Inch-Pounds
8	46/50	9	30/36
10	55/60	11	40/46
12	70/75	13	55/60
14	80/85	15	70/75
16	90/95	17	80/85
18	100/110	19	90/95
20	110/120	21	100/110
22	120/130	23	110/120
24	140/150	25	120/130

Coupling Nut Torque Values (Series I, II and III)

Maximum engagement and disengagement		Minimum disengagement
Shell Size	Inch Pound	Inch Pound
8	8	2
9	8	2
10	12	2
11	12	2
12	16	2
13	16	2
14	20	4
15	20	3
16	24	4
17	24	3
18	28	5
19	28	3
20	32	6
21	32	5
22	36	7
23	36	5
24	36	7
25	40	5

Dimensions shown in inches (mm)
Specifications and dimensions subject to change

Backshell - Type E (Straight), Series II only

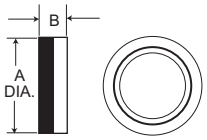

Shell Size Series II	A Dia. Max.	B Dia. Max.
8	.580 (14.73)	.328 (8.33)
10	.705 (17.91)	.328 (8.33)
12	.830 (21.08)	.328 (8.33)
14	.955 (24.26)	.328 (8.33)
16	1.080 (27.32)	.328 (8.33)
18	1.205 (30.61)	.328 (8.33)
20	.330 (33.78)	.328 (8.33)
22	1.455 (36.96)	.328 (8.33)
24	1.555 (39.50)	.270 (6.86)

How To Order

Shell Size	Finishes A	Finishes B	Finishes C	Finishes N
Series II	Cadmium/Nickel-Clear Part Number	Cadmium/Nickel-O.D Part Number	Anodic Non-Cond. Part Number	Electroless Nickel Part Number
8	057-0776-000	057-0862-000	057-0819-000	057-0776-002
10	057-0777-000	057-0863-000	057-0820-000	057-0777-002
12	057-0778-000	057-0864-000	057-0821-000	057-0778-002
14	057-0779-000	057-0846-000	057-0822-000	057-0779-002
16	057-0780-000	057-0847-000	057-0823-000	057-0780-002
18	057-0781-000	057-0848-000	057-0824-000	057-0781-002
20	057-0782-000	057-0849-000	057-0825-000	057-0782-002
22	057-0783-000	057-0850-000	057-0826-000	057-0783-002
24	057-0784-000	057-0851-000	057-0827-000	057-0784-002

Backshell - Type F (Cable Clamp)

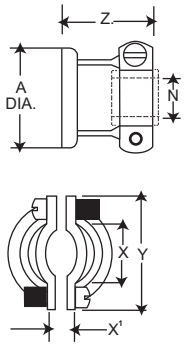

Shell Size Series I	Shell Size Series II	A Max.	N Dia. Max.	X Dia. Min.	X[1] Dia. Min.	Y Max.	Z Max.
9	8	.508 (14.73)	.135 (3.43)	.234 (5.94)	.187 (4.75)	.829 (21.06)	.813 (20.65)
11	10	.705 (17.91)	.198 (5.03)	.297 (7.54)	.187 (4.75)	.891 (22.63)	.813 (20.65)
13	12	.830 (21.08)	.322 (7.18)	.422 (10.72)	.281 (7.14)	1.016 (25.81)	.813 (20.65)
15	14	.955 (24.26)	.385 (9.78)	.547 (12.89)	.325 (8.26)	1.141 (28.98)	.813 (20.65)
17	16	1.080 (27.43)	.510 (12.95)	.609 (15.47)	.356 (9.04)	1.203 (30.56)	.933 (23.70)
19	18	1.205 (30.61)	.635 (16.13)	.734 (18.64)	.456 (11.58)	1.469 (37.31)	.933 (23.70)
21	20	1.330 (33.78)	.635 (16.13)	.734 (18.64)	.519 (13.18)	1.469 (37.31)	.933 (23.70)
23	22	1.455 (36.96)	.760 (19.30)	.922 (23.42)	.519 (13.18)	1.656 (42.06)	.933 (23.70)
25	24	1.555 (39.50)	.810 (20.57)	.984 (24.99)	.657 (16.69)	1.750 (44.45)	.893 (22.68)

How To Order (MS Version)

MS27506 - A - 8 - 2

Military Designation
MS27506 Type F Straight with Cable Clamp

Finish
A - Cad/Nickel (Clear)
B - Cad/Nickel (O.D)
F - Nickel (Electroless)

Shell Size
Series I - 9, 11, 13, 15, 17, 19, 21, 23, 25
Series II - 8, 10, 12, 14, 16, 18, 20, 22, 24

Adapter
Geometry - 2

Shell Size Series I	Shell Size Series II	MS Part Number	Cannon Part Number	Finishes A Cannon	Finishes A MS	Finishes B Cannon	Finishes B MS	Finishes N Cannon	Finishes F MS
9	8	27506-*8-2	057-3005-***	-012	A	-013	B	-015	F
11	10	27506-*10-2	057-3006-***	-011	A	-012	B	-014	F
13	12	27506-*12-2	057-3007-***	-012	A	-013	B	-015	F
15	14	27506-*14-2	057-3008-***	-010	A	-011	B	-013	F
17	16	27506-*16-2	057-3009-***	-012	A	-013	B	-015	F
19	18	27506-*18-2	057-3010-***	-013	A	-014	B	-016	F
21	20	27506-*20-2	057-3011-***	-011	A	-013	B	-015	F
23	22	27506-*22-2	057-3012-***	-015	A	-016	B	-018	F
25	24	27506-*24-2	057-3013-***	-013	A	-014	B	-017	F

* MS Finish *** Cannon Finish

Shell Size Series III	Military Part Number	Cannon Part Number	Cannon	Military	Cannon	Military
9	M85049/ 38-9 **	970-6000-***	-336	N	-345	W
11	M85049/ 38-11 **	970-6000-***	-337	N	-346	W
13	M85049/ 38-13 **	970-6000-***	-338	N	-347	W
15	M85049/ 38-15 **	970-6000-***	-339	N	-348	W
17	M85049/ 38-17 **	970-6000-***	-340	N	-349	W
19	M85049/ 38-19 **	970-6000-***	-341	N	-350	W
21	M85049/ 38-21**	970-6000-***	-342	N	-351	W
23	M85049/ 38-23 **	970-6000-***	-343	N	-352	W
25	M85049/ 38-25 **	970-6000-***	-344	N	-353	W

M85049/ 38 9 W

Military Designator

Type
Straight Cable Clamp 38

Shell Size Series III
9,11,13,15,17,19,21,23,25

Finish
Electroless Nickel N
OD Cadmium
over electroless nickel W

** Finish
*** Cannon Part No.

Dimensions shown in inches (mm)
Specifications and dimensions subject to change

Backshell - Type P (Potting Boot)

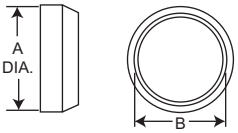

Shell Size Series I	Shell Size Series II	A Dia. Max.	B Dia. Max.
9	8	.598 (15.19)	.434 (11.02)
11	10	.723 (18.36)	.548 (13.92)
13	12	.847 (21.51)	.673 (17.09)
15	14	.969 (24.61)	.798 (20.27)
17	16	1.087 (27.61)	.899 (22.83)
19	18	1.211 (30.76)	1.024 (26.01)
21	20	1.336 (33.93)	1.141 (29.98)
23	22	1.461 (37.11)	1.274 (32.36)
25	24	1.586 (40.28)	1.399 (35.53)

How To Order (MS Version)

MS27486 - 10 - 1

MS Designation
Shell Size
Series I - 9, 11, 13, 15, 17, 19, 21, 23, 25
Series II - 8, 10, 12, 14, 16, 18, 20 , 22 , 24
1 - Straight Cup

NOTE: When ordering the MS version you must specify both MS numbers for the Potting Boot and the Adapter Ring.

Shell Size Series I	Shell Size Series II	MS27486 Part Number	Cannon Part Number
9	8	27486-**-1	040-0185-000
11	10	27486-**-1	040-0169-000
13	12	27486-**-1	040-0170-000
15	14	27486-**-1	040-0171-000
17	16	27486-**-1	040-0172-000
19	18	27486-**-1	040-0173-000
21	20	27486-**-1	040-0174-000
23	22	27486-**-1	040-0175-000
25	24	27486-**-1	040-0176-000

** Only even numbered shell size is applicable.

Potting Boot Adapter Ring

How To Order (MS Version)

MS27485 - A - 8

Miltary Designation
Finish
A - Cad/Nickel (Clear)
B - Cad/Nickel (O.D)
F - Nickel (Electroless)
Shell Size
Series I - 9, 11, 13, 15, 17, 19, 21, 23, 25
Series II - 8, 10, 12, 14, 16, 18, 20 , 22 , 24

NOTE: When ordering the MS version you must specify both MS numbers for the Potting Boot and the Adapter Ring.

Shell Size Series I	Shell Size Series II	MS27485 Part Number	Cannon Part Number	Finishes: A Cadmium/Nickel Clear Cannon	A MS	B Cadmium/Nickel-O.D Cannon	B MS	N Electroless Nickel Cannon	F MS
9	8	27485-*-**	237-0887-***	-000	A	-001	B	-002	F
11	10	27485-*-**	237-0874-***	-000	A	-001	B	-002	F
13	12	27485-*-**	237-0875-***	-000	A	-001	B	-002	F
15	14	27485-*-**	237-0876-***	-000	A	-001	B	-002	F
17	16	27485-*-**	237-0877-***	-000	A	-001	B	-002	F
19	18	27485-*-**	237-0878-***	-000	A	-001	B	-002	F
21	20	27485-*-**	237-0879-***	-000	A	-001	B	-002	F
23	22	27485-*-**	237-0880-***	-000	A	-001	B	-003	F
25	24	27485-*-**	237-0881-***	-000	A	-001	B	-003	F

* MS Finish
** Only even numbered shell size is applicable
*** Cannon Finish

Wire Sealing Plugs

Series III Size	Series I & II Size	Part Number Cannon	Part Number MS27488	Color Code
22D	22D	225-1013-000	MS27488-22-2	Black
20	20	225-0070-000	MS27488-20-2	Red
16	16	225-0104-000	MS27488-16-2	Green
12	12	225-0105-000	MS27488-12-2	Orange

Wire sealing plugs meet MS27488 standards. The plugs are color coded according to size for easy identification. Wire sealing plugs may be ordered separately.

Tools - Crimp

M22520/1-01 CBT-530

M22520/2-01

CBT-565

Contact Size	Pin Contact Series I/II/III		Socket Contact Series II		Socket Contact Series I & III	
	Crimp Tool Part Number	Locator or Turret Part Number	Crimp Tool Part Number	Locator or Turret Part Number	Crimp Tool Part Number	Locator or Turret Part Number
22D or 22M*	M22520/2-01	M22520/2-09	M22520/2-01	M22520/2-06	M22520/2-01	M22520/2-07
22*	M22520/2-01	M22520/2-09	M22520/2-01	M22520/2-06	M22520/2-01	M22520/2-07
20	M22520/1-01	M22520/1-04 OR TH 187	M22520/1-01	M22520/1-04	M22520/1-01	M22520/1-04
16	M22520/1-01	M22520/1-04 OR TH 187	M22520/1-01	M22520/1-04	M22520/1-01	M22520/1-04
12	M22520/1-01	M22520/1-04	M22520/1-01	M22520/1-04	M22520/1-01	M22520/1-04
8 Coax						
Inner Conductor	Crimp Tool	Crimp Tool Locator	Outer Conductor		Crimp Tool	Crimp Tool Locator
RG180	M22520/2-01	995-0002-268	RG180		M22520/5-01	M22520/5-39B
RG 174, 179, 316	M22520/2-01	995-0002-268	RG 174, 179, 316		M22520/5-01	M22520/5-37B
RG 142	M22520/2-01	995-0002-268	RG 142		M22520/5-01	M22520/5-19B
12 Coax						
Inner Conductor	Crimp Tool	Crimp Tool Locator	Outer Conductor		Crimp Tool	Crimp Tool Locator
RG174, 179, 316	M22520/2-01	M22520/2-34	RG174, 179, 316		M22520/31-01	M22520/31-02
8 Twinax	Crimp Tool	Crimp Tool Locator				
Center Contact	M22520/2-01	K709				
Intermediate Contact	M22520/5-01	Y631 Die Closure B				
Outer Contact	M22520/5-01	Y631 Die Closure A				

* For reference only

Tools - Plastic

Insertion/Extraction

Contact Size	Cannon Description	Cannon Part Number	M81969 Part Number	Superseded Military Part Number	Insertion Color Tip	Extraction Color Tip
22D	CIET-22D-01	274-7048-000	M81969/14-01	MS27534-22D	Green	White
22M*	CIET-22D-01	274-7048-000	M81969/14-01	MS27534-22D	Green	White
20	CIET-20-10	274-7001-000	M81969/14-10	MS27534-20	Red	Orange
16	CIET-16-03	274-7002-000	M81969/14-03	MS27534-16	Blue	White
12	CIET-12-04	274-7003-000	M81969/14-04	MS27534-12	Yellow	White
8 Coax/Twinax	CET8-T	323-7004-001	—	—	—	—
12 Coax	CIET-12-04	274-7003-000	M81969/14-04	M527534-12	Yellow	White

Insertion tool not required for size 8

Tools - Metal (MS)

Insertion

Extraction

Contact Size	Insertion			Extraction			
	MS27495 Part Number	ITT CANNON Part Number	Color Band	MS27495 Part Number	ITT CANNON Part Number	Color Band No.1	Color Band No.2
22D OR 22M*	MS27495 A22M	995-0001-718	Black	MS27495 R22M	995-0001-719	Black	White
22*	MS27495 A22	995-0001-720	Brown	MS27495 R22	995-0001-721	Brown	White
20	MS27495 A20	995-0001-716	Red	MS27495 R20	995-0001-717	Red	White
16	MS27495 A16	995-0001-732	Blue	MS27495 R16	995-0001-731	Blue	White

Band No. 1 indicates tool size.
Band No. 2 indicates removal tool.
* For reference only

Dimensions shown in inches (mm)
Specifications and dimensions subject to change

Assembly Instructions

Wire Stripping

Strip insulation from end of wire to be crimped. (See table for proper stripping dimensions.) Do not cut or damage wire strands.

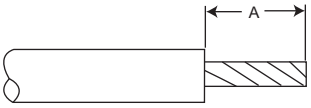

Wire Size	A
22D or 22M*	.125 (3.18)
20	.188 (4.77)
16	.188 (4.77)
12	.188 (4.77)

* For reference only

Contact Crimping

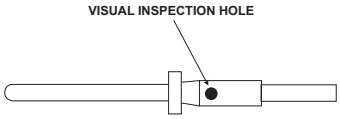

1. Insert stripped wire into contact crimp pot. Wire must be visible thru inspection hole.

2. Using correct crimp tool and locator, cycle the tool once to be sure the indentors are open. Insert contact and wire into locator. Squeeze tool handles firmly and completely to insure a proper crimp. The tool will not release unless the crimp indentors in the tool head have been fully actuated.

3. Release crimped contact and wire from tool. Be certain the wire is visible thru inspection hole in contact.

Contact Insertion

1. Remove hardware from plug or receptacle and slip over wire bundle in proper order for reassembly.

2. Using proper plastic or metal insertion tool for corresponding contact, position wire in tip of the tool so that the tool tip butts up against the contact shoulder.

3. Press tool against contact shoulder and, with firm and even pressure, insert wired contact and tool tip into center contact cavity. A slight click may be heard as metal retaining tines snap into place behind contact shoulder.

4. Remove tool and pull back lightly on wire to make sure contact is properly seated. Repeat operation with remainder of contacts to be inserted, beginning with the center cavity and working outward in alternating rows.

5. After all contacts are inserted, fill any empty cavities with wire sealing plugs, Ressemble plug or receptacle hardware.

Contact Extraction

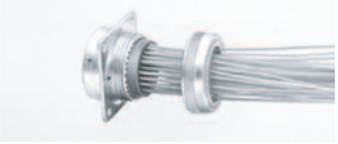

1. Remove hardware from plug or receptacle and slide hardware back along wire bundle.

2. Using plastic or metal extraction tool with proper color code corresponding to contact size, place wire in tool.

3. Insert tool into contact cavity until tool tip bottoms against the contact shoulder, expanding clip retaining tines.

4. Hold wire firmly in tool and extract wired contact and tool. Repeat operation for all contacts to be extracted.

5. Fill any empty wire cavities with wire sealing plugs, and

6. Reassemble plug or receptacle.

MIL-DTL-38999 Specifications

The following excerpts are some of the parameter requirements of the MIL-DTL-3899 Specification.

Test Description	Paragraph Reference	Requirements
Contact Retention	4 5 19	After preloading to 3 pounds maximum, the force shall be applied at a rate of approximately 1 pound per second and maintained at full load for 5-10 seconds. No damage to contacts or insert shall result nor shall the contacts be dislocated from their normal position in the connector more than 0.012 inch under the given load. Failure to meet these requirements shall be cause for rejection.

Contact Size	22M*	22D	22*	20	18
Loads in Pounds ± 10%	10	10	10	15	25

Coupling Torque — 4 5 6

For qualification testing, mating halves shall be coupled and uncoupled, measuring the torques necessary.The torques required to couple and uncouple mating connector halves shall fall within the limits specifications as follows:

Shell Size	Torque Max.	Torque Min.	Shell Size	Torque Max.	Torque Min.	Shell Size	Torque Max.	Torque Min.	Shell Size	Torque Max.	Torque Min.
8/9	8	2	14	20	4	18	28	5	22	36	7
10/11	12	2	15	20	3	19	28	3	23	36	5
12	16	2	16	24	4	20	32	6	24	36	7
13	16	2	17	24	3	21	32	5	25	40	5

Durability — 4 5 7

Connector halves shall be mated and unmated 250 times for Series II with ground fingers and 500 times for Series I and III at a rate not exceeding 300 cycles per hour. The test may be performed by hand or by mechanical means, but the coupling ring shall be operated as in normal service. Failure to complete this test because of mechanical malfunction shall be cause for rejection.

Insulation Resistance — 4 5 9

An insulation resistance test shall be performed on unmated connectors in accordance with MIL-STD-202, Method 302, Test condition B. Measurement shall be made between three pairs of adjacent contacts and the shell. Failure to meet the minimum requirement of 50,000 megohms for Classes E, P, F, R, and T shall be cause for rejection.

Vibration — 4 5 22

Wired, mated connectors shall be subjected to the vibration test of MIL-STD-202, Method 214, Test Condition II, except that the duration shall be one hour in each plane. Receptacles shall be mounted on the vibration fixture by normal means. All contacts shall be wired in a series circuit and 100-500 millamperes of current shall be allowed to flow through the series circuit during vibration. Suitable means shall be employed to monitor the current flow and to indicate any discontinuity of more than 1 microsecond. The wire bundle shall be damped to the nonvibrating points at least 8 inches from the rear of the connector. Current discontinuity of 1 microsecond or more, disengagement of the mated connectors, evidence of cracking, breaking, or loosening of parts shall be cause for rejection.

Shock — 4 5 23

Wired mated connectors shall be subjected to one shock in each direction in each of three mutually perpendicular axes. The pulse shall be approximate half sine wave of 300g ± 15% magnitude with a duration of 3 ± 1 milliseconds. Receptacles shall be mounted on a shock fixture by normal means. All contacts shall be wired in a series circuit and 100-150 ma. of current shall flow through the series circuit during shock. Suitable means shall be employed to monitor the current flow and to indicate any discontinuity of more than 1 microsecond. The wire bundle shall be clamped to fixed points at feast 8 inches from the rear of the connector, Current discontinuity of 1 microsecond or more, disengagement of the mated connectors, evidence of cracking, breaking, or loosening of parts shall be cause for rejection.

Thermal Shock — 4 5 4

Unmated receptacles shall be subjected to 10 cycles of thermal shock in the following manner:

Step a The receptacle shall be suspended for 10 + 1 - 0 minutes in the center of a cold water both with a volume of approximately one cubic foot. No dimension of the bath shall be less than 10 inches. The water temperature shall not exceed 4ºC (39.20ºF)

Step b The receptacle shall be suspended for 10 1 - 0 minutes in the center of a hot water bath with a volume of approximately one cubic foot. No dimension of the bath shall be less than 10 inches. The water temperature shall be not less than 94ºC (201ºF).

The time of transfer from one bath to the other shall not exceed 5 seconds. At the end of the tenth cycle, the receptacle shall have the excess moisture shaken off and shall then be dried in a forced air oven at 66±5˚C for 15 ±1 minutes. Any evidence of damage resulting from this test shall be cause for rejection.

Altitude Immersion — 4 5 8

Mated connectors shall be placed in a container of water at approximately 20ºC and placed in an altitude chamber. All wire ends shall be located within the chamber and exposed to the chamber atmosphere, but not submerged. The exposed wire ends shall not be sealed. A quantity of salt, 5 percent by weight, shall be added to make the water conductive. The chamber pressure shall then be reduced to approximately one inch of mercury and maintained for thirty minutes. The chamber pressure shall then be slowly returned to atmospheric. This shall be considered one cycle. Two additional cycles shall be performed. At the end of the last cycle, while the mated connectors are still submerged, the Insulation Resistance Test (room temperature), and the High Potential Test (sea level voltages) shall be performed upon the same circuits. Failure to meet an insulation resistance minimum of 2,000 megohms or any evidence of dielectric breakdown or -flashover shall be cause for rejection.

Solvent Immersion — 4 5 29

Unmated connectors shall be immersed fully in the applicable fluid specified below for 20 hours. After removal from the fluid, each connector shall remain for one hour in free air at room temperature.
a.) Jet fuel JP-4 to MIL-J-5624 b.) Aircraft lubricating oil to MIL-L-9236

Corrosion — 4 5 12

Unmated connectors and individual contact samples shall be subjected to the soft spray of MIL-STD-202, Method 101, Test Condition 8 (tin plated, Class Y receptacles-24 hours). Immediately after exposure, the surfaces of the specimens shall be thoroughly washed in tap water and dried in a circulatory oven at a temperature of 38 ±3ºC (100ºF) for a period of approximately 12 hours. Any exposure of basis metal as a result of this test, shall be cause for rejection.

Dynamic Salt Spray — 4 5 12 2

(Series I and 11, finish B; Series III, class W). The wired assembled plugs and receptacles shall be mated and unmated 50 cycles at a rate of 300 cycles per hour maximum. The mating and unmating shall be accomplished so that the plug and receptacle are completely separated during each cycle. The connectors shall then be subjected to the salt spray test in accordance with method 1001 of MIL-STD- 1344. The connectors shall be tested for 452 hours mated followed by 48 hours unmated. After the salt spray exposure the remaining number of durability cycles specified in 4.7.7 shall be completed.

Temperature Durability — 4 5 33

Wired rated connectors shall be subjected to the indicated anbient temperature for a period of 1,000 hours

Series I and II (finish A)	$150^{+3^\circ}_{-0^\circ}$C (302° F)	Series I and II (finish B)	$175^{+3^\circ}_{-0^\circ}$C (347° F)
Series III (class W)	$175^{+3^\circ}_{-0^\circ}$C (347° F)	All other finishes	$200^{+3^\circ}_{-0^\circ}$C (392° F)

* For reference only

1. MATERIAL CONTENT AND PHYSICAL FORM
Electrical connectors do not usually contain hazardous materials.

Electrical connectors and individual components do not release or otherwise result in exposure to hazardous chemicals under normal conditions of use and fall under the definition of "Article," under the Hazard Communication Standard, 29 CFR 1910.1200, and are not considered hazardous materials.

Solder and fluxes can be hazardous if inhaled or absorbed through the skin and should only be used as recommended by the manufacturer. Please consult your solder and flux manufacturer for more specific application recommendations.

2. FIRE CHARACTERISTICS AND ELECTRIC SHOCK HAZARD
There is no fire hazard when the connector is correctly wired and used within the specified parameters. Incorrect wiring or assembly of the connector or careless use of metal tools or conductive fluids, or transit damage to any of the component parts may cause electric shock or burns. Live circuits must not be broken by separating mated connectors as this may cause arcing, ionization and burning. Heat dissipation is greater at maximum resistance in a circuit. Hot spots may occur when resistance is raised locally by damage, e.g. cracked or deformed contacts, broken strands of wire. Local overheating may also result from the use of the incorrect application tools or from poor quality soldering or slack screw terminals. Overheating may occur if the ratings in the product Data Sheet/Catalog are exceeded and can cause breakdown of insulation and hence electric shock. If heating is allowed to continue it intensifies by further increasing the local resistance through loss of temper of spring contacts, formation of oxide film on contacts and wires and leakage currents through carbonization of insulation and tracking paths. Fire can then result in the presence of combustible materials and this may release noxious fumes. Overheating may not be visually apparent. Burns may result from touching overheated components.

3. HANDLING
Care must be taken to avoid damage
to any component parts of electrical connectors during installation and use. Although there are normally no sharp edges, care must be taken when handling certain components to avoid injury to fingers. Always wear safety glasses to avoid potential injury to eyes during cleaning, soldering, fiber preparation, etc.

Electrical connectors may be damaged in transit to the customers, and damage may result in creation of hazards. Products should therefore be examined prior to installation/use and rejected if found to be damaged. Proper lifting techniques shall be used for handling shipping cartons.

4. DISPOSAL
Please recycle, reclaim or dispose of connectors and individual components in accordance with local, state and federal laws. Incineration of certain materials may release noxious or even toxic fumes..

5. APPLICATION
Connectors with exposed contacts should not be selected for use on the current supply side of an electrical circuit, because an electric shock could result from touching exposed contacts on an unmated connector. Voltages in excess of 30 V ac or 42.5 V dc are potentially hazardous and care should be taken to ensure that such voltages cannot be transmitted in any way to exposed metal parts of the connector body. The connector and wiring should be checked, before making live, to have no damage to metal parts or insulators, no solder blobs, loose strands, conducting lubricants, swarf, or any other undesired conducting particles. Circuit resistance and continuity check should be made to make certain that there are no high resistance joints or spurious conducting paths. Always use the specified application tools, cleaning materials and assembly instructions documented in the Data Sheet/Catalog. Do not permit untrained personnel to wire, assemble or tamper with connectors. For operation voltage please see appropriate national regulations.

IMPORTANT GENERAL INFORMATION
(i) Air and creepage paths/Operating voltage. The admissible operating voltages depend on the individual applications and the valid national and other applicable safety regulations.
For this reason the air and creepage path data are only reference values. Observe reduction of air and creepage paths due to PC board and/or harnessing.

(ii) Temperature
All information given are temperature limits. The operation temperature depends on the individual application.

(iii) Pressure
All pressure information given are differential pressure limits. The specific differential pressure limits, across the connector interface, are documented in the Data Safety/catalog

(iv) Other important information
Cannon continuously endeavors to improve their products. Therefore, Cannon products may deviate from the description, technical data and shape as shown in this catalog and data sheets.

Commodities in this catalog may be controlled for export or re-export under the Export Administration Regulations (EAR), Nuclear Regulatory Commission (NRC) Regulations, or by the International Traffic in Arms Regulations (ITAR) when specifically designed, modified or configured for military use.

ITT Corporation Interconnect Solutions Division, ("ITT") manufactures high quality products. However, these products are intended to be used in accordance with the specifications in this publication. Any use or application that deviates from the stated operating specifications is not recommended and may be unsafe. No information and data contained in this publication shall be construed to create any liability on the part of ITT.

Product Warranty
A limited product warranty applies to ITT products. Please refer to www.ittcannon.com (General Terms and Conditions of Sale) for the complete text of ITT's applicable Terms and Conditions of Sale, including warranty.

This publication is not to be construed as an offer. It is intended merely as an invitation to make an offer. ITT does not assume liability for any patent infringement or violation of other rights claimed by third parties which may result from its use.

With prior written consent, reprinting this publication without any modifications is generally permitted.

"ITT", the Engineered Blocks Logo and "Engineered for life" are registered trademarks of ITT Corporation. All other trademarks or registered trademarks are property of their respective owners. All dates subject to change without notice.

Circular/Filter/Hermetic/Fiber Optic Connectors

As a world leader in circular, filter, and hermetic connectors, ITT can leverage its design and manufacturing expertise to fit virtually any application. Our expertise includes fast positive mating for a wide range of military applications, as well as numerous sizes and contact configurations for various harsh environments. Our wide variety of fiber optic products include hybrid contacts, multi-channel, rack and panel, and hi-rel assemblies, including MIL and ARINC standard solutions.ITT can meet numerous specs, including NATO and MIL standards.

www.ittcannon.com/circulars • www.ittcannon.com/filter • www.ittcannon.com/hermetics • www.ittcannon.com/fiberoptics

D-Subminiature Connectors

Cannon invented D-sub connectors in 1952. Our family of D-Subs now includes combinations of signal, power and RF, as well as severe service sealed connectors. Cannon D-Subs are available with an extensive line of backshells and accessories and are one of the most economical shielded connector solutions available. ITT D-Sub connectors are qualified to the MIL-DTL-24308 specification.

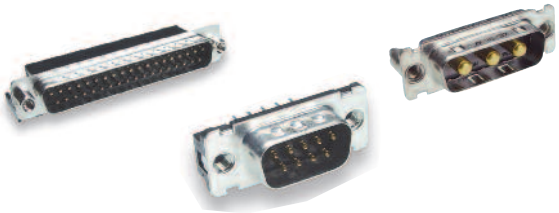

www.ittcannon.com/dsubs

Microminiature Connectors

Developed first by Cannon in the 1960' s, Interconnect Solutions microminiature connectors offer high performance and reliability with exceptional versatility. Available in rectangular, circular, and strip configurations for countless applications, many of our connectors meet or exceed applicable requirements of the MIL-DTL-83513 specification.

www.ittcannon.com/micro

Rack and Panel Connectors

Initially pioneered by Cannon during the 1930s, Interconnect Solutions is the world leader in rack and panel connectors, offering unmatched variety of shell configurations and insert arrangements, materials, plating, and contact options. Many of our standard and custom designs meet the stringent requirements of ARINC 600, ARINC 404 (MIL-C-81659), and MIL-DTL-83733 standards.

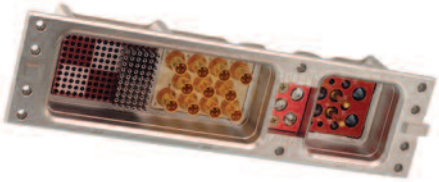

www.ittcannon.com/rackandpanel

RF Connectors

ITT Interconnect Solutions has been providing interconnect products to the Microwave and RF industry since 1963 (formerly The Sealectro Corporation). The RF 50 & 75 Ohm product lines cover UHF band through Ku band requirements. These connectors and cable assemblies are available with a thread type, snap type, bayonet type or slide on coupling method. The frequencies range from DC to 18+ GHz.

www.ittcannon.com/RF50 • www.ittcannon.com/RF75

Transportation

The ITT ICS interconnect range includes sealed circular and rectangular connectors in metal or plastic shells. These configurations include board to cable or cable to cable/ bulkhead applications. Both signal and power contacts can be combined in various layouts. All product lines within the Transportation segment offer very low contact resistance providing maximum signal integrity.

www.ittcannon.com/transportation

ITT Interconnect Solutions is an international manufacturer and supplier of connectors including circular, rectangular, fiber optic, RF, power and high voltage, audio, PMCIA, Compact Flash Card, enclosures, cable assemblies, and application specific custom solutions. The Interconnect Solutions portfolio includes the brands Cannon, VEAM, and BIW. As a worldwide leader in connector technology for nearly a century, ITT offers one of the broadest product offerings, six sigma manufacturing capability, Value Based Product Development with exceptional engineering capability, and an extensive sales, distribution, and customer support network.

ITT

ITT

Global Design & Manufacturing and Customer Support

North America

MEXICO - Cannon, VEAM
Av. Libre Comercio s/n-
entre Calzada Industrial
Nuevo Nogales y Calzada del Raquet Club,
Parque Industrial Nuevo Nogales
phone: +52.631.3110050
fax: +52.631.3110060

USA - Cannon
666 East Dyer Road
Santa Ana, CA 92705
toll free: 1.800.854.3028
phone: +1.714.557.4700
fax: +1.714.628.2142

USA - BIW
500 Tesconi Circle
Santa Rosa, CA 95401
phone: +1.707.523.2300
fax: +1.707.523.3567

USA - VEAM
100 New Wood Road
Watertown, CT 06795
phone: +1.860.274.9681
fax: +1.860.274.4963

Europe & Middle East

FRANCE - Cannon, VEAM
15, Boulevard Robert Thiboust
Serris, France 77700
phone: +33.1.60.04.93.93
fax: +33.1.60.04.93.90

GERMANY - Cannon, VEAM
Cannonstrasse 1
Weinstadt, 71384
phone: +49.7151.699.0
fax: +49.7151.699.217

ITALY - VEAM
Corso Europa 41/43
Lainate (MI), Italy 20020
phone: +39.02938721
fax: +39.0293872300

LEBANON - BIW
P.O. Box 199
Jounieh
Lebanon
phone: +961.9.911.560
fax: +961.9.912.126

UK - Cannon, VEAM
Jays Close, Viables Estate
Basingstoke, RG22 4BA
phone: +44.1256.311200
fax: +44.1256.323356

Asia

CHINA - Cannon, VEAM
Tuopandun Industrial Area, Jinda Cheng,
Xiner Village, Shajing Town,
Baoan District, Shenzhen City,
Guangdong, China 518125
phone: +86.755.2726.7238
fax: +86.755.2726.7515

HONG KONG - Cannon, VEAM
Units 2405-6, 24/F, ING Tower
308 Des Voeux Road
Central
Hong Kong
phone: +852.2732.2720
fax: +852.2732.2919

INDIA - Cannon, VEAM
ITT Corporation India Pvt Ltd
2nd Fl Prama House
21 Cama Industrial Estate
Walbhat Road, Goregaon (E),
Mumbai
phone: +91 22 67843000
fax: +91 22 26783033

JAPAN - Cannon, VEAM
11-3, 5 Chome, Hibarigaoka, Zama-shi
Kanagawa, Japan 228-0003
phone: +81.462.57.2010
fax: +81.462.57.1680

SINGAPORE - Cannon, VEAM
10 Jalan Kilang #06-01 Singapore
159410
phone: +65.62763693 ext 232
fax: +65.62763685

www.ittcannon.com

©2011 ITT Corporation. "Engineered for life" and "Cannon" are registered trademarks of ITT Corporation. Specification and other data are based on information available at the time of printing, and are subject to change without notice.

НИОКР СИСТЕМС

ООО «НИОКРсистемс» - это оперативные поставки широкого спектра электронных компонентов отечественного и импортного производства напрямую от производителей и с крупнейших мировых складов. Реализуемая нашей компанией продукция насчитывает более полумиллиона наименований.

Благодаря этому наша компания предлагает к поставке практически не ограниченный ассортимент компонентов как оптовыми, мелкооптовыми партиями, так и в розницу.

Благодаря развитой сети поставщиков, помогаем в поиске и приобретении экзотичных или снятых с производства компонентов.

Наша компания это:

- Гарантия качества поставляемой продукции
- Широкий ассортимент
- Минимальные сроки поставок
- Техническая поддержка
- Подбор комплектации
- Индивидуальный подход
- Гибкое ценообразование
- Работаем по 275 ФЗ

ООО «НИОКР СИТЕМС»
Москва, 125362, Россия, ул. Вишневая, д. 9, к. 1, Блок 104 а и 104 в

Телефон: 8 (495) 268-14-82
Email: n@nsistems.ru

ИНН: 7735154786
ОГРН: 1167746717709