NOTES:

1. PART DESIGNED IN METRIC.
2. TERMINAL FOR USE WITH 5557 SERIES HOUSINGS.
3. MATES WITH 5558, 5566 AND 5569 SERIES CONNECTORS.
4. REFER TO DWG. NO. CS-5556*/5558* FOR CRIMP SPECIFICATIONS.
5. PRODUCT SPECIFICATION AND PROCESSING PARAMETERS SEE: PS-5556-001, PS-5556-002, PS-5556-003

MATERIAL:

A. CDA 260 BRASS, .0080±.0004/(0.203±0.010) THICK.
B. CDA 510 PHOS. BRONZE .0080±.0004/(0.203±0.010) THICK.

PLATING:

*A. SELECTIVE GOLD PLATE .000030/(0.00076) MIN., AND SELECTIVE MATTE TIN .000100/(0.00254) OVER .000050/(0.00127) NICKEL OVERALL.

*B. SELECTIVE GOLD PLATE .000015/(0.00038) MIN., AND SELECTIVE MATTE TIN .000100/(0.00254) OVER .000050/(0.00127) NICKEL OVERALL.

*C. SELECTIVE GOLD PLATE .000050/(0.00127) MIN., AND SELECTIVE MATTE TIN .000100/(0.00254) OVER .000050/(0.00127) NICKEL OVERALL.

*THE PRIMARY SHIPPING CARTON WILL BE LABELED "COMPLIANT TO RoHS DIRECTIVE 2002/95/EC AND ELV ANNEX II OF DIRECTIVE 2000/53/EC." CARTONS WITHOUT THIS LABEL MAY CONTAIN PRODUCT WITH TIN-LEAD PLATING.

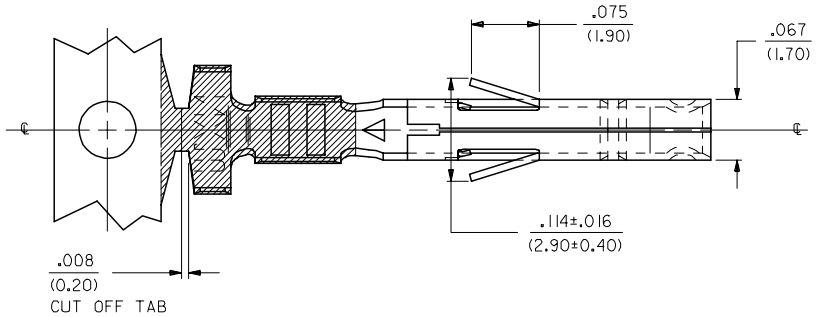


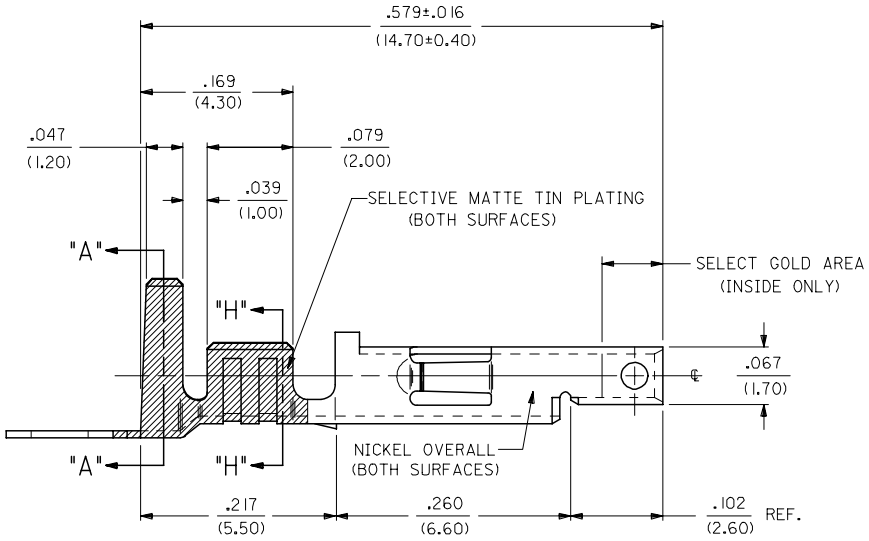


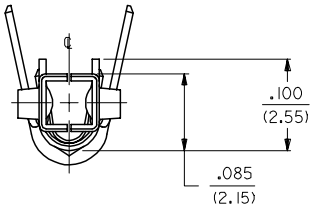


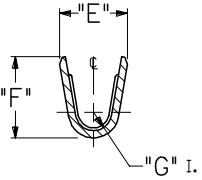


SECT. "H-H"

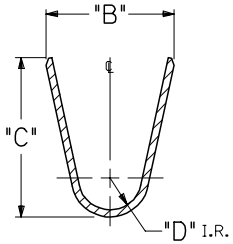


SECT. "A-A"

| REV | DESCRIPTION |
|---|---|
| F1 | REMOVE 28-30 GAGE<br>EC NO: UCP2006-1559<br>DRWN:NDUNNE 2006/01/11<br>CHKD:GPOLGAR 2006/01/12<br>APPR:JCOMERCI 2006/01/16 |

QUALITY SYMBOLS: ▼=0 ▽=0 R.

GENERAL TOLERANCES (UNLESS SPECIFIED)

| | mm | INCH |
|---|---|---|
| 4 PLACES | ± --- | ± --- |
| 3 PLACES | ± --- | ± .010 |
| 2 PLACES | ± 0.25 | ± .014 |
| 1 PLACE | ± 0.36 | ± --- |
| ANGULAR ±1/2° | | |

DRAFT WHERE APPLICABLE MUST REMAIN WITHIN DIMENSIONS

DIMENSION STYLE: IN/MM
SCALE: 10:1
DESIGN UNITS: METRIC
THIRD ANGLE PROJECTION

| | | DATE |
|---|---|---|
| DRAWN BY | GEP | 5/17/90 |
| CHECKED BY | RJF | 5/17/90 |
| APPROVED BY | RAS | 5/17/90 |

TITLE: TERMINAL, MINI-FIT JR., FEMAE CRIMP, SELECT GOLD BLANK PLATE FORM

molex MOLEX INCORPORATED

MATERIAL NO.: SEE SHT. 2
DOCUMENT NO.: SD-5556-GSP*
SHEET NO.: 1 OF 2
SIZE: C

THIS DRAWING CONTAINS INFORMATION THAT IS PROPRIETARY TO MOLEX INCORPORATED AND SHOULD NOT BE USED WITHOUT WRITTEN PERMISSION

| SHT. | REV. |
|---|---|
| 2 | F1 |
| 1 | F1 |

tb_frame_C_P_ME_T
Rev. D 2004/04/02

5556

| PART NO. | ENG. NO. | MAT'L. | PLATE | WIRE GAGE | QUANTITY PER REEL | DIM. "B" | DIM. "C" | DIM. "D" | DIM. "E" | DIM. "F" | DIM. "G" |
|---|---|---|---|---|---|---|---|---|---|---|---|
| 39-00-0163 | 5556-GSP | A | A | 18-24 GA. | 4,000 | .142±.012 (3.60±0.30) | .177±.016 (4.50±0.40) | .035 (0.90) | .075±.012 (1.90±0.30) | .091±.016 (2.40±0.40) | .020 (0.50) |
| 39-00-0164 | 5556-GSPL | | | | | | | | | | |
| 39-00-0165 | 5556-GS2P | | | 22-28 GA. | 6,000 | .091±.012 (2.30±0.30) | .091±.016 (2.30±0.40) | .024 (0.60) | .071±.012 (1.80±0.30) | .065±.016 (1.65±0.40) | .016 (0.40) |
| 39-00-0166 | 5556-GS2PL | | | | | | | | | | |
| 39-00-0167 | 5556-GS3P | | | 16 GA. | 4,000 | .142±.012 (3.60±0.30) | .177±.016 (4.50±0.40) | .035 (0.90) | .091±.012 (2.30±0.30) | .106±.016 (2.70±0.40) | .024 (0.60) |
| 39-00-0168 | 5556-GS3PL | | | | | | | | | | |
| NOT TOOLED | 5556-GS10P | | | 14 GA. | 4,000 | .142±.012 (3.60±0.30) | .177±.016 (4.50±0.40) | .035 (0.90) | .091±.012 (2.30±0.30) | .114±.016 (2.90±0.40) | .024 (0.60) |
| NOT TOOLED | 5556-GS10PL | | | | | | | | | | |
| 39-00-0169 | 5556-GS4P | A | B | 18-24 GA. | 4,000 | .142±.012 (3.60±0.30) | .177±.016 (4.50±0.40) | .035 (0.90) | .075±.012 (1.90±0.30) | .091±.016 (2.40±0.40) | .020 (0.50) |
| 39-00-0170 | 5556-GS4PL | | | | | | | | | | |
| 39-00-0171 | 5556-GS5P | | | 22-28 GA. | 6,000 | .091±.012 (2.30±0.30) | .091±.016 (2.30±0.40) | .024 (0.60) | .071±.012 (1.80±0.30) | .065±.016 (1.65±0.40) | .016 (0.40) |
| 39-00-0172 | 5556-GS5PL | | | | | | | | | | |
| 39-00-0173 | 5556-GS6P | | | 16 GA. | 4,000 | .142±.012 (3.60±0.30) | .177±.016 (4.50±0.40) | .035 (0.90) | .091±.012 (2.30±0.30) | .106±.016 (2.70±0.40) | .024 (0.60) |
| 39-00-0174 | 5556-GS6PL | | | | | | | | | | |
| NOT TOOLED | 5556-GS11P | | | 14 GA. | 4,000 | .142±.012 (3.60±0.30) | .177±.016 (4.50±0.40) | .035 (0.90) | .091±.012 (2.30±0.30) | .114±.016 (2.90±0.40) | .024 (0.60) |
| NOT TOOLED | 5556-GS11PL | | | | | | | | | | |
| 39-00-0175 | 5556-GS7P | A | C | 18-24 GA. | 4,000 | .142±.012 (3.60±0.30) | .177±.016 (4.50±0.40) | .035 (0.90) | .075±.012 (1.90±0.30) | .091±.016 (2.40±0.40) | .020 (0.50) |
| 39-00-0176 | 5556-GS7PL | | | | | | | | | | |
| 39-00-0177 | 5556-GS8P | | | 22-28 GA. | 6,000 | .091±.012 (2.30±0.30) | .091±.016 (2.30±0.40) | .024 (0.60) | .071±.012 (1.80±0.30) | .065±.016 (1.65±0.40) | .016 (0.40) |
| 39-00-0178 | 5556-GS8PL | | | | | | | | | | |
| 39-00-0179 | 5556-GS9P | | | 16 GA. | 4,000 | .142±.012 (3.60±0.30) | .177±.016 (4.50±0.40) | .035 (0.90) | .091±.012 (2.30±0.30) | .106±.016 (2.70±0.40) | .024 (0.60) |
| 39-00-0180 | 5556-GS9PL | | | | | | | | | | |
| NOT TOOLED | 5556-GS12P | | | 14 GA. | 4,000 | .142±.012 (3.60±0.30) | .177±.016 (4.50±0.40) | .035 (0.90) | .091±.012 (2.30±0.30) | .114±.016 (2.90±0.40) | .024 (0.60) |
| NOT TOOLED | 5556-GS12PL | | | | | | | | | | |
| 39-00-0181 | 5556-PBGSP | B | A | 18-24 GA. | 4,000 | .142±.012 (3.60±0.30) | .177±.016 (4.50±0.40) | .035 (0.90) | .075±.012 (1.90±0.30) | .091±.016 (2.40±0.40) | .020 (0.50) |
| 39-00-0182 | 5556-PBGSPL | | | | | | | | | | |
| 39-00-0183 | 5556-PBGS2P | | | 22-28 GA. | 6,000 | .091±.012 (2.30±0.30) | .091±.016 (2.30±0.40) | .024 (0.60) | .071±.012 (1.80±0.30) | .065±.016 (1.65±0.40) | .016 (0.40) |
| 39-00-0184 | 5556-PBGS2PL | | | | | | | | | | |
| 39-00-0185 | 5556-PBGS3P | | | 16 GA. | 4,000 | .142±.012 (3.60±0.30) | .177±.016 (4.50±0.40) | .035 (0.90) | .091±.012 (2.30±0.30) | .106±.016 (2.70±0.40) | .024 (0.60) |
| 39-00-0186 | 5556-PBGS3PL | | | | | | | | | | |
| NOT TOOLED | 5556-PBGS10P | | | 14 GA. | 4,000 | .142±.012 (3.60±0.30) | .177±.016 (4.50±0.40) | .035 (0.90) | .091±.012 (2.30±0.30) | .114±.016 (2.90±0.40) | .024 (0.60) |
| NOT TOOLED | 5556-PBGS10PL | | | | | | | | | | |
| 39-00-0194 | 5556-PBGS4P | B | B | 18-24 GA. | 4,000 | .142±.012 (3.60±0.30) | .177±.016 (4.50±0.40) | .035 (0.90) | .075±.012 (1.90±0.30) | .091±.016 (2.40±0.40) | .020 (0.50) |
| 39-00-0195 | 5556-PBGS4PL | | | | | | | | | | |
| 39-00-0196 | 5556-PBGS5P | | | 22-28 GA. | 6,000 | .091±.012 (2.30±0.30) | .091±.016 (2.30±0.40) | .024 (0.60) | .071±.012 (1.80±0.30) | .065±.016 (1.65±0.40) | .016 (0.40) |
| 39-00-0197 | 5556-PBGS5PL | | | | | | | | | | |
| 39-00-0198 | 5556-PBGS6P | | | 16 GA. | 4,000 | .142±.012 (3.60±0.30) | .177±.016 (4.50±0.40) | .035 (0.90) | .091±.012 (2.30±0.30) | .106±.016 (2.70±0.40) | .024 (0.60) |
| 39-00-0199 | 5556-PBGS6PL | | | | | | | | | | |
| NOT TOOLED | 5556-PBGS11P | | | 14 GA. | 4,000 | .142±.012 (3.60±0.30) | .177±.016 (4.50±0.40) | .035 (0.90) | .091±.012 (2.30±0.30) | .114±.016 (2.90±0.40) | .024 (0.60) |
| NOT TOOLED | 5556-PBGS11 | | | | | | | | | | |
| 39-00-0200 | 5556-PBGS7P | B | C | 18-24 GA. | 4,000 | .142±.012 (3.60±0.30) | .177±.016 (4.50±0.40) | .035 (0.90) | .075±.012 (1.90±0.30) | .091±.016 (2.40±0.40) | .020 (0.50) |
| 39-00-0201 | 5556-PBGS7PL | | | | | | | | | | |
| 39-00-0202 | 5556-PBGS8P | | | 22-28 GA. | 6,000 | .091±.012 (2.30±0.30) | .091±.016 (2.30±0.40) | .024 (0.60) | .071±.012 (1.80±0.30) | .065±.016 (1.65±0.40) | .016 (0.40) |
| 39-00-0203 | 5556-PBGS8PL | | | | | | | | | | |
| 39-00-0204 | 5556-PBGS9P | | | 16 GA. | 4,000 | .142±.012 (3.60±0.30) | .177±.016 (4.50±0.40) | .035 (0.90) | .091±.012 (2.30±0.30) | .106±.016 (2.70±0.40) | .024 (0.60) |
| 39-00-0205 | 5556-PBGS9PL | | | | | | | | | | |
| NOT TOOLED | 5556-PBGS12P | | | 14 GA. | 4,000 | .142±.012 (3.60±0.30) | .177±.016 (4.50±0.40) | .035 (0.90) | .091±.012 (2.30±0.30) | .114±.016 (2.90±0.40) | .024 (0.60) |
| NOT TOOLED | 5556-PBGS12PL | | | | | | | | | | |

## LEGEND:

5556-**GS*P*

- BASE NO.
- MATERIAL
  - BLANK= BRASS
  - PB= PHOS. BRONZE
- GOLD, SELECT
- PLATING & CRIMP SIZE COMB.
  - BLANK THRU 15
- BLANK-PLATE-FORM VERSION
- CHAIN OR LOOSE
  - BLANK= CHAIN
  - L= LOOSE

SEE SHEET 1
EC NO: UCP2006-1559 2006/01/11
DRWN:NDUNNE 2006/01/12
CHKD:GPOLGAR 2006/01/16
APPR:JCOMERCI
DESCRIPTION
REV
T1

QUALITY SYMBOLS
▼=0
Ⓒ=0

GENERAL TOLERANCES (UNLESS SPECIFIED)

| | mm | INCH |
|---|---|---|
| 4 PLACES | ± --- | ± --- |
| 3 PLACES | ± --- | ± --- |
| 2 PLACES | ± --- | ± --- |
| 1 PLACE | ± --- | ± --- |
| ANGULAR ±1/2° | | |

DRAFT WHERE APPLICABLE MUST REMAIN WITHIN DIMENSIONS

DIMENSION STYLE: IN/MM
SCALE: ---
DESIGN UNITS: METRIC
THIRD ANGLE PROJECTION

DRAWN BY: GEP DATE: 5/17/90
CHECKED BY: RJF DATE: 5/17/90
APPROVED BY: RAS DATE: 5/17/90

TITLE: TERMINAL, MINI-FIT JR., FEMALE,CRIMP,SELECT GOLD BLANK-PLATE-FORM

molex MOLEX INCORPORATED

MATERIAL NO.: SEE CHART
DOCUMENT NO.: SD-5556-GSP*
SHEET NO.: 2 2
SIZE: C

THIS DRAWING CONTAINS INFORMATION THAT IS PROPRIETARY TO MOLEX INCORPORATED AND SHOULD NOT BE USED WITHOUT WRITTEN PERMISSION

НИОКР СИСТЕМС

**ООО «НИОКРсистемс» -** это оперативные поставки широкого спектра электронных компонентов отечественного и импортного производства напрямую от производителей и с крупнейших мировых складов. Реализуемая нашей компанией продукция насчитывает более полумиллиона наименований.

Благодаря этому наша компания предлагает к поставке практически не ограниченный ассортимент компонентов как оптовыми, мелкооптовыми партиями, так и в розницу.

Благодаря развитой сети поставщиков, помогаем в поиске и приобретении экзотичных или снятых с производства компонентов.

## Наша компания это:

- Гарантия качества поставляемой продукции
- Широкий ассортимент
- Минимальные сроки поставок
- Техническая поддержка
- Подбор комплектации
- Индивидуальный подход
- Гибкое ценообразование
- Работаем по 275 ФЗ

ООО «НИОКР СИТЕМС»
Москва, 125362, Россия, ул. Вишневая, д. 9, к. 1, Блок 104 а и 104 в

Телефон: 8 (495) 268-14-82
Email: n@nsistems.ru

ИНН: 7735154786
ОГРН: 1167746717709