MODEL: PJ-002BH-SMT | DESCRIPTION: DC POWER JACK

FEATURES

- designed for pick and place
- 5A current rating
- narrow footprint

SPECIFICATIONS

parameter	conditions/description	min	typ	max	units
rated input voltage			16		Vdc
rated input current				5	A
contact resistance	between terminal and mating plug between terminal in a closed circuit[1]			50 30	mΩ mΩ
insulation resistance	at 500 Vdc	100			MΩ
voltage withstand	at 50/60Hz for 1 minute			500	Vac
insertion/withdrawal force		0.3		3	kg
terminal strength	any direction for 10 seconds			500	g
operating temperature		-25		85	°C
life			5,000		cycles
RoHS	yes				

Notes: 1. When measured at a current of less than 100 mA / 1 kHz
2. Add suffix "-TR" to the model number for tape & reel packaging

SOLDERABILITY

parameter	conditions/description	min	typ	max	units
reflow soldering	see reflow profile	255	260	265	°C

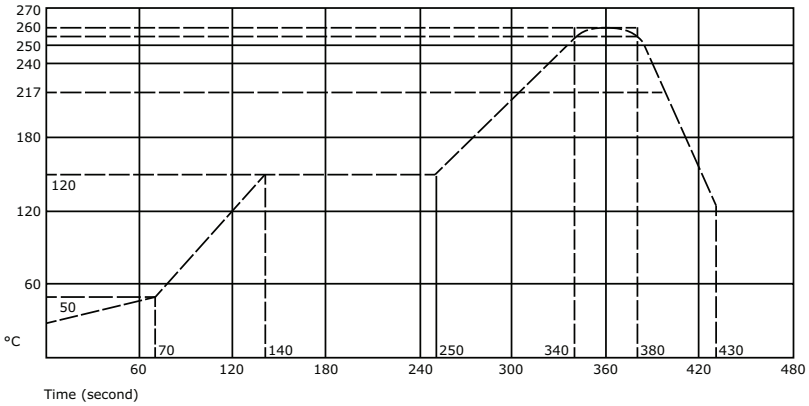

MECHANICAL DRAWING

units: mm[inches]

TOLERANCE:
X.X ±0.2mm
X.XX ±0.1mm
X.XXX ±0.05mm

	MATERIAL	PLATING
centre pin	brass	nickel plated
terminal 1	brass	silver plated
terminal 2	copper alloy	silver plated
terminal 3	brass	silver plated
plastic	PA6T	

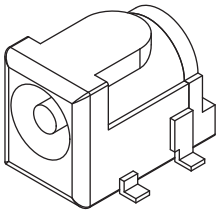

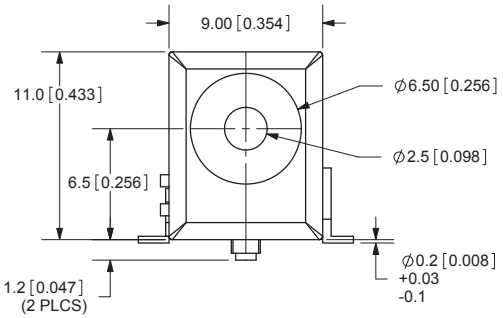

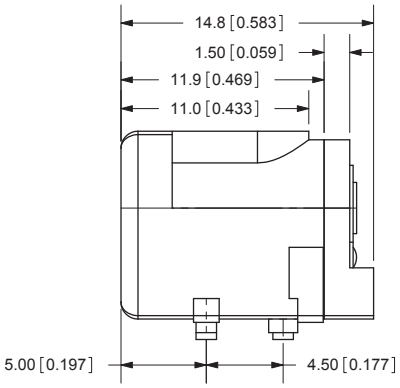

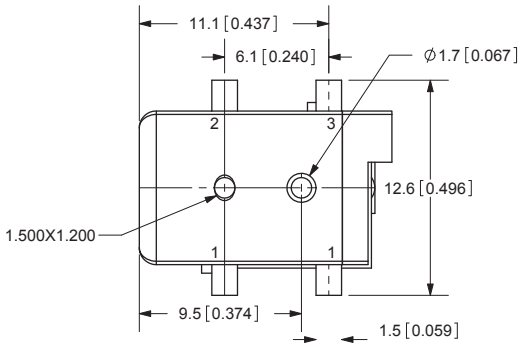

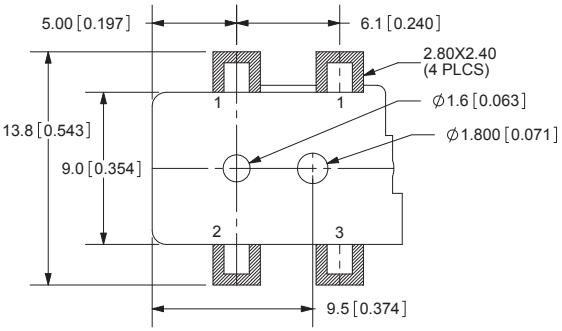

PCB LAYOUT
TOP VIEW

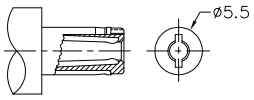

MATING PLUG
Jack Insertion Depth: 8.9 mm

SCHEMATIC	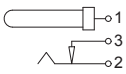
Model	Center Pin
PJ-002BH-SMT	ø2.5 mm

REVISION HISTORY

rev.	description	date
1.0	initial release	10/19/2005
1.01	updated operating temperature	06/20/2011
1.02	updated spec, added jack insertion depth	10/12/2012
1.03	added TR package option	11/28/2012

The revision history provided is for informational purposes only and is believed to be accurate.

CUI INC®

Headquarters
20050 SW 112th Ave.
Tualatin, OR 97062
800.275.4899

Fax 503.612.2383
cui.com
techsupport@cui.com

CUI offers a one (1) year limited warranty. Complete warranty information is listed on our website.

CUI reserves the right to make changes to the product at any time without notice. Information provided by CUI is believed to be accurate and reliable. However, no responsibility is assumed by CUI for its use, nor for any infringements of patents or other rights of third parties which may result from its use.

CUI products are not authorized or warranted for use as critical components in equipment that requires an extremely high level of reliability. A critical component is any component of a life support device or system whose failure to perform can be reasonably expected to cause the failure of the life support device or system, or to affect its safety or effectiveness.

НИОКР СИСТЕМС

ООО «НИОКРсистемс» - это оперативные поставки широкого спектра электронных компонентов отечественного и импортного производства напрямую от производителей и с крупнейших мировых складов. Реализуемая нашей компанией продукция насчитывает более полумиллиона наименований.

Благодаря этому наша компания предлагает к поставке практически не ограниченный ассортимент компонентов как оптовыми, мелкооптовыми партиями, так и в розницу.

Благодаря развитой сети поставщиков, помогаем в поиске и приобретении экзотичных или снятых с производства компонентов.

Наша компания это:

- Гарантия качества поставляемой продукции
- Широкий ассортимент
- Минимальные сроки поставок
- Техническая поддержка
- Подбор комплектации
- Индивидуальный подход
- Гибкое ценообразование
- Работаем по 275 ФЗ

ООО «НИОКР СИТЕМС»
Москва, 125362, Россия, ул. Вишневая, д. 9, к. 1, Блок 104 а и 104 в

Телефон: 8 (495) 268-14-82
Email: n@nsistems.ru

ИНН: 7735154786
ОГРН: 1167746717709