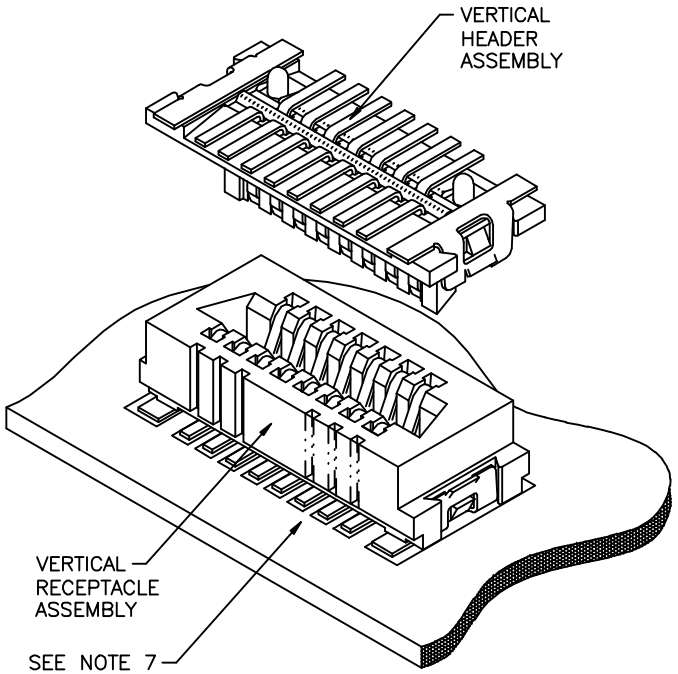
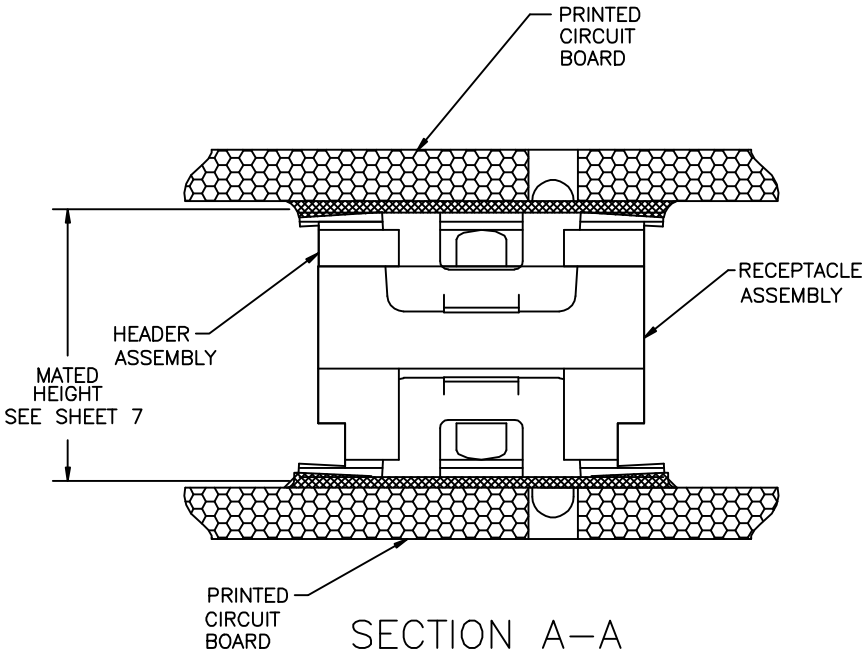
PRODUCT NUMBER
SEE TABLE

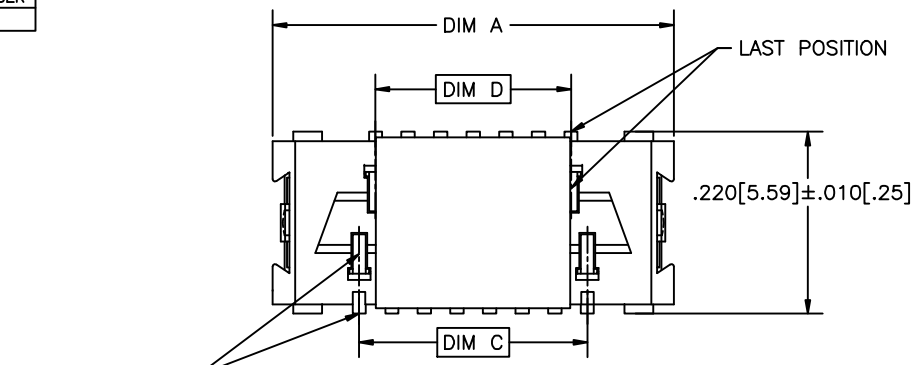


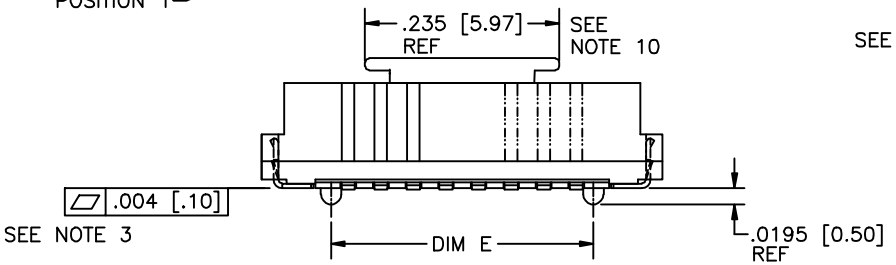


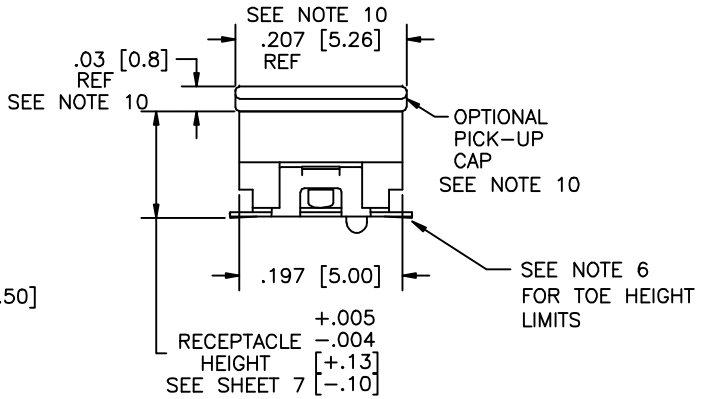
SECTION A–A
ROTATED 90°
N.T.S.

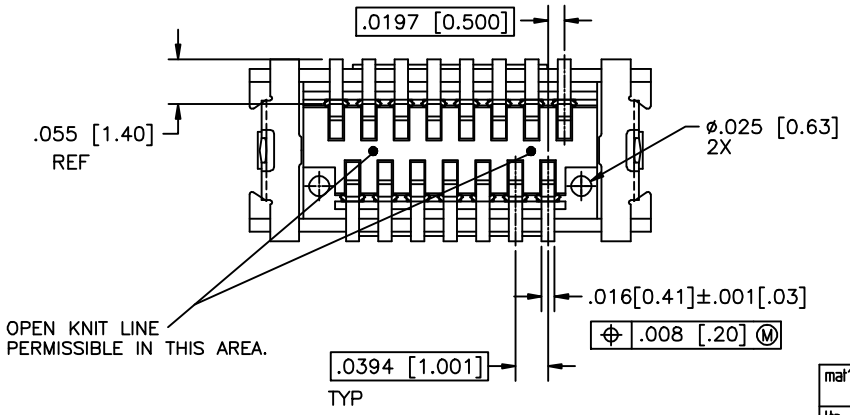
| | | |

PRODUCT NUMBER
SEE TABLE







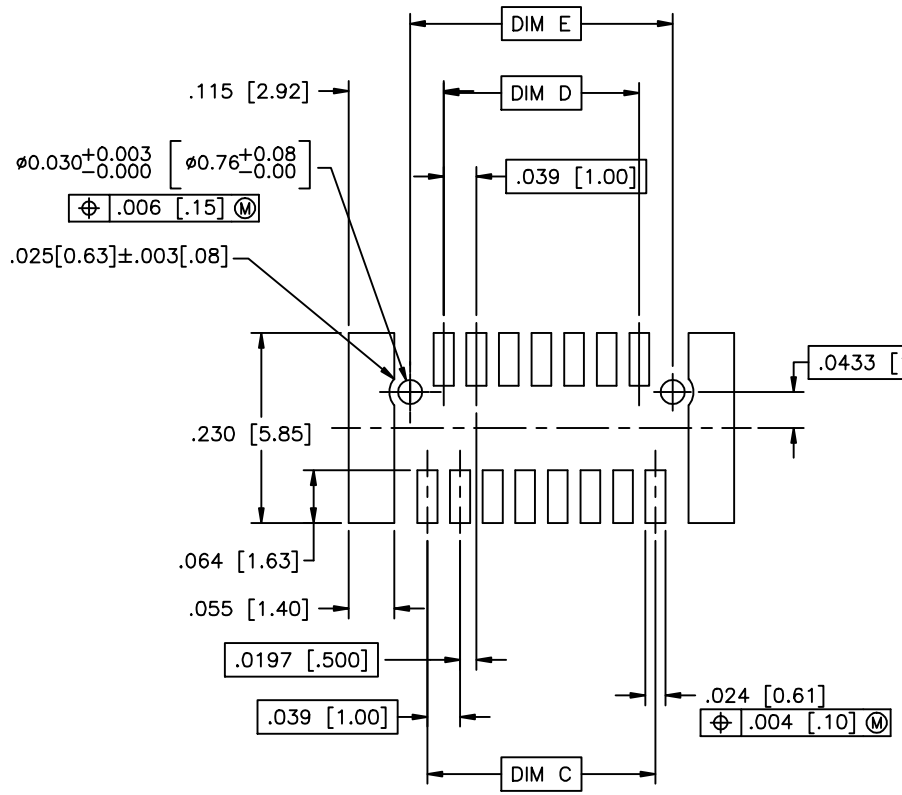


mat'l code				surface ISO 1302		tolerance ISO 406 ISO 1101		projection		product family			
				tolerances unless otherwise specified						CONAN			
ltr	ecn no	dr	date							title			
AF				angles	linear	.XX±.01/.X±0.3		INCH/MM		CONAN™ CONNECTOR ASSEMBLY			
				0°±2°		.XXX±.005/.XX±0.13							
						.XXXX±.0020/.XXX±0.051		scale 5:1					
				dr	R.SEIPLE	11/13/91				dwg no 91900	sheet 2 of 7	size A3	
				engr	D.HORCHLER	01/10/92							
				chr	D.HORCHLER	01/10/92							
				appd	D.HORCHLER	01/10/92				type Product Customer Drawing			
sheet index	revision sheet												

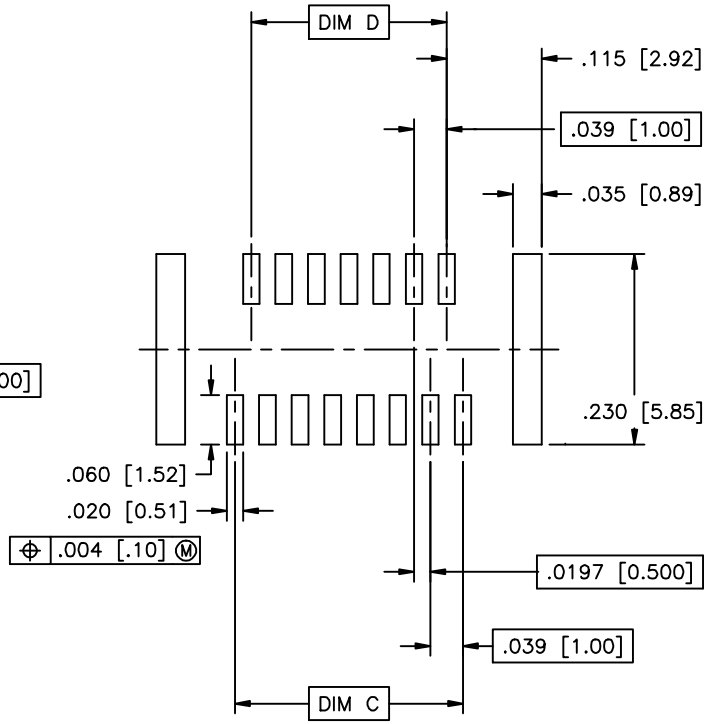
Copyright FCI
FCIconnect.com
form A3

PDM: Rev:AF STATUS:Released Printed: Dec 07, 2011

PRODUCT NUMBER
SEE TABLE



RECOMMENDED
PAD LAYOUT



RECOMMENDED
STENCIL LAYOUT
FOR RECEPTACLE

mat'l code				surface ISO 1302		tolerance ISO 406 ISO 1101		projection		product family					
ltr	ecn no	dr	date	tolerances unless otherwise specified						CONAN					
AF				angles	linear	.XX±.01/.X±0.3		INCH/MM		title					
				0°±2°		.XXX±.005/.XX±0.13				CONAN™ CONNECTOR ASSEMBLY					
						.XXXX±.0020/.XXX±0.051		scale 5:1							
				dr	R.SEIPLE	11/13/91				dwg no		sheet 3 of 7		size	
				engr	D.HORCHLER	01/10/92				91900				A3	
				chr	D.HORCHLER	01/10/92				type	Product Customer Drawing				
				appd	D.HORCHLER	01/10/92									
sheet index	revision sheet														

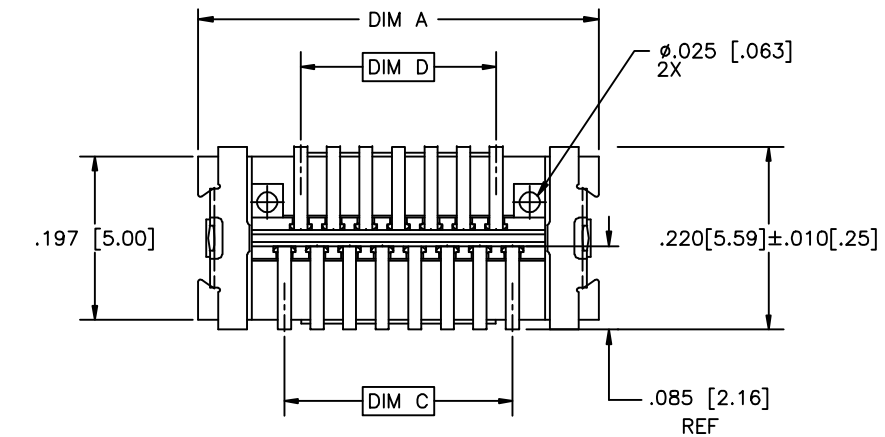
Copyright FCI

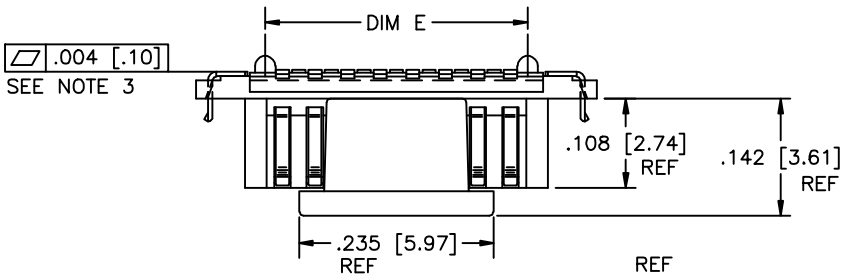
FCIconnect.com

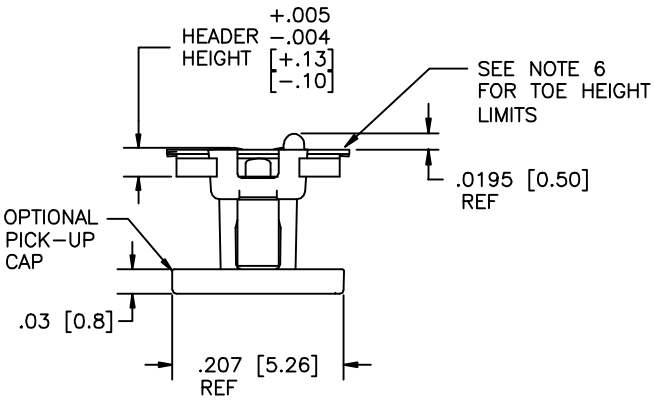
form: A3

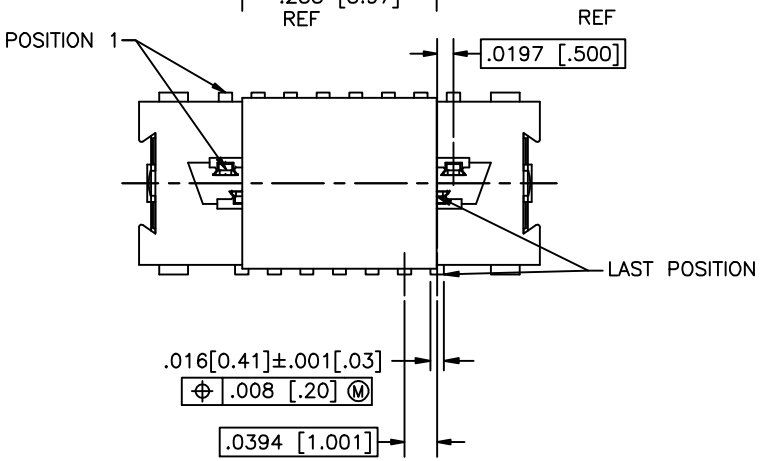
PDM: Rev:AF STATUS:Released Printed: Dec 07, 2011

PRODUCT NUMBER
SEE TABLE







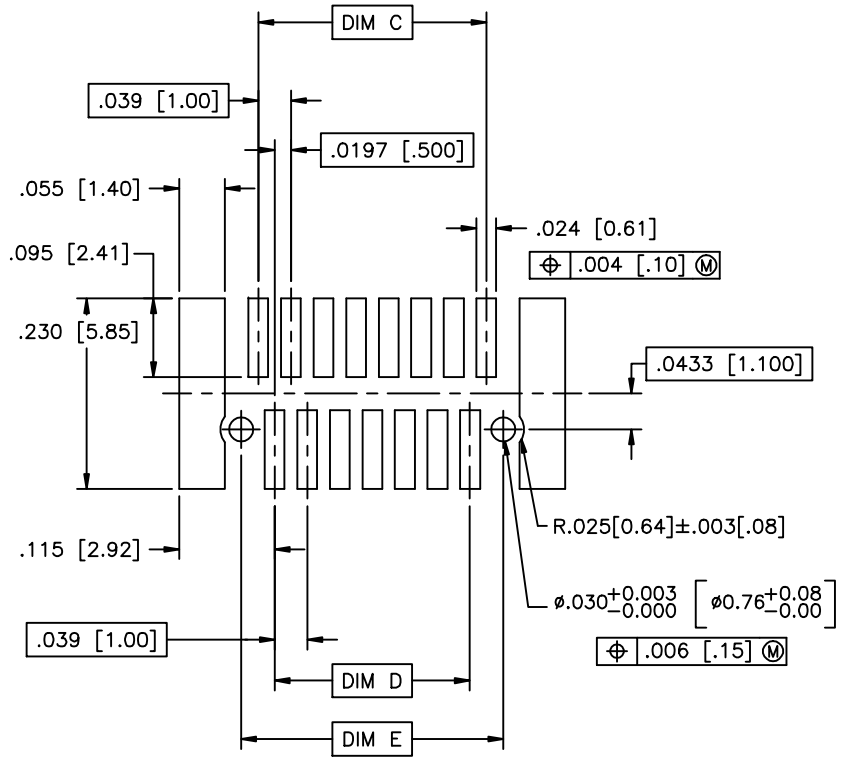


mat'l code				surface ISO 1302		tolerance ISO 406 ISO 1101		projection	product family: CONAN				
ltr	ecn no	dr	date	tolerances unless otherwise specified					title: CONAN™ CONNECTOR ASSEMBLY				
AF				angles	linear	.XX±.01/.X±0.3		INCH/MM					
						.XXX±.005/.XX±0.13							
				0°±2°		.XXXX±.0020/.XXX±0.051							
				dr	R.SEIPLE	11/13/91		scale 5:1	dwg no 91900	sheet 4 of 7	size A3		
				engr	D.HORCHLER	01/10/92							
				chr	D.HORCHLER	01/10/92							
				appd	D.HORCHLER	01/10/92			type: Product Customer Drawing				
sheet index	revision sheet												

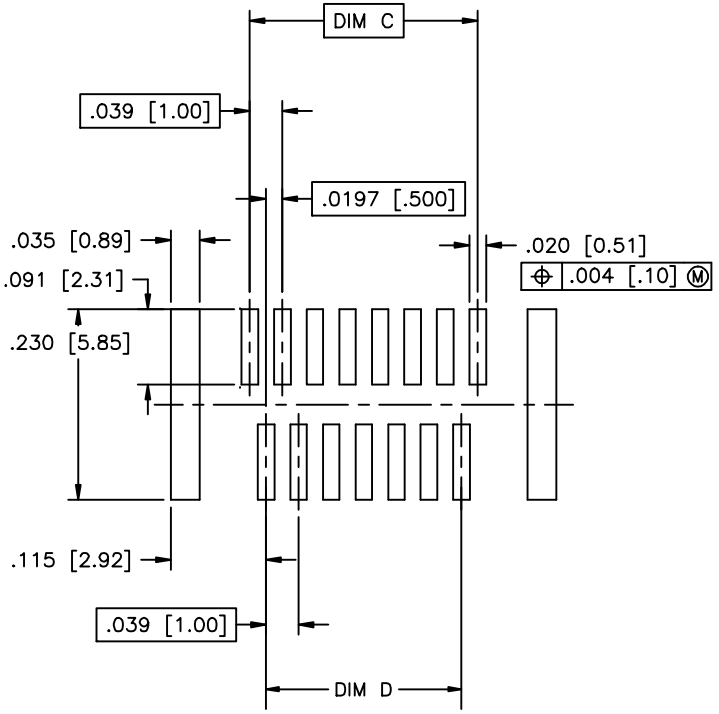
Copyright FCI
FCIconnect.com
form A3

PDM: Rev:AF STATUS:Released Printed: Dec 07, 2011

PRODUCT NUMBER
SEE TABLE



RECOMMENDED
PAD LAYOUT



RECOMMENDED
STENCIL LAYOUT
FOR HEADER

mat'l code				surface ISO 1302		tolerance ISO 406 ISO 1101		projection	product family				
ltr	ecn no	dr	date	tolerances unless otherwise specified					CONAN				
AF				angles	linear	.XX±.01/.X±0.3		INCH/MM	title				
				0°±2°		.XXX±.005/.XX±0.13			CONAN™ CONNECTOR ASSEMBLY				
						.XXXX±.0020/.XXX±0.051		scale 5:1					
				dr	R.SEIPLE	11/13/91			dwg no	sheet 5 of 7		size	
				engr	D.HORCHLER	01/10/92			91900			A3	
				chr	D.HORCHLER	01/10/92			type	Product Customer Drawing			
				appd	D.HORCHLER	01/10/92							
sheet index	revision sheet												

Copyright FCI

FCIconnect.com

form A3

PDM: Rev:AF STATUS:Released Printed: Dec 07, 2011

PRODUCT NUMBER	POS	DIM "A"	DIM "C"	DIM "D"	DIM "E"
919TC-WXY09	9	.366 [9.30]	.157 [4.00]	.118 [3.00]	.1990 [5.055]
-WXY09LF					
-WXY11	11	.406 [10.30]	.197 [5.00]	.157 [4.00]	.2380 [6.045]
-WXY11LF					
-WXY15	15	.484 [12.30]	.276 [7.00]	.236 [6.00]	.3170 [8.052]
-WXY15LF					
-WXY21	21	.602 [15.30]	.394 [10.00]	.354 [9.00]	.4350 [11.049]
-WXY21LF					
-WXY25	25	.681 [17.30]	.472 [12.00]	.433 [11.00]	.5140 [13.056]
-WXY25LF					
-WXY31	31	.800 [20.30]	.591 [15.00]	.551 [14.00]	.6320 [16.053]
-WXY31LF					
-WXY41	41	.996 [25.30]	.787 [20.00]	.748 [19.00]	.8290 [21.057]
-WXY41LF					
-WXY51	51	1.193 [30.30]	.984 [25.00]	.945 [24.00]	1.0260 [26.060]
-WXY51LF					
-WXY69	69	1.547 [39.30]	1.339 [34.00]	1.299 [33.00]	1.3800 [35.052]
-WXY69LF					

NOTES:

1. MATERIALS:

   RECEPTACLE HOUSING – LCP, UL-94V-0. COLOR: NATURAL.

   RECEPTACLE TERMINALS – COPPER ALLOY, PLATED WITH 15u"/.38u GXT™ IN CONTACT AREA AND 100u"/2.54u Sn ON SOLDER LEGS WITH AN OVERALL 50u"/1.27u Ni UNDERPLATE.

   HEADER HOUSING – LCP, UL-94V-0. COLOR: NATURAL.

   HEADER TERMINALS – COPPER ALLOY, PLATED WITH 15u"/.38u GXT™ IN CONTACT AREA AND 100u"/2.54u Sn ON SOLDER LEGS WITH AN OVERALL 50u"/1.27u Ni UNDERPLATE.
   RETENTION DEVICE – BRASS, PLATED WITH 100u"/2.54u Sn OVER NICKEL.

2. REFERENCE GS-12-006 FOR PRODUCT PERFORMANCE DATA.

(3.) SEE TA-774 FOR FURTHER DESCRIPTION OF HOW THIS DIMENSION IS APPLIED.

(4.) PICK AND PLACE CAP OR TAPE IS ONLY AVAILABLE WITH OPTION 3 PACKAGING. (PSA ADHESIVE SEALED). ALSO, PSA PACKAGING REQUIRES A PICK AND PLACE CAP.

5. RECOMMENDED SOLDER PASTE THICKNESS IS .006 TO .008 INCHES THICK.

(6.) THE TOE HEIGHT OF THE SOLDER TAIL SHALL BE MEASURED FROM THE LOWEST POINT OF THE .004 CO-PLANARITY GRAVITY PLANE. THIS MEASUREMENT IS NOT TO EXCEED A WINDOW OF .000 TO .007 INCHES.

(7.) THREE SLOTS MAY BE LOCATED AT EITHER END OF HOUSING.

(8.) 5.50mm MATED HEIGHT IS ONLY AVAILABLE IN 9, 15 AND 31 POS.

(9.) 7.50mm MATED HEIGHT IS ONLY AVAILABLE IN 9 POS.

(10) APPLIES TO 91921-3XYZZ AND 91931- 3XYZZ OPTIONS ONLY.

11. THE HOUSING WILL WITHSTAND EXPOSURE TO 260°C PEAK TEMPERATURE FOR 30 SECONDS IN A CONVECTION INFRA RED OR VAPOR PHASE REFLOW OVEN. SEE APPLICATION/PROCEDURES IF THEY ARE AVAILABLE

(12.) PRODUCT WITH "LF" AT THE END MEETS EUROPEAN UNION DIRECTIVES AND OTHER COUNTRY REGULATION AS DESCRIBED IN GS-22-008.

| | | | | |

PRODUCT NUMBER
SEE TABLE

CONAN ASSEMBLY PART NUMBER

LEAD FREE OPTION
SEE NOTE 12

919 T C – W X Y ZZ LF

TYPE	T
HEADER WITH NO PEGS	0
HEADER WITH PEGS	1
RECEPTACLE WITH NO PEGS	2
RECEPTACLE WITH PEGS	3

	Y	HEADER HEIGHT	RECEPTACLE HEIGHT	MATED HEIGHT +.010 −.008 [+.25 −.20]
	1	.034 [.86]	.129 [3.28]	.163 [4.15]
	2	.048 [1.23]	SEE Y=1 FOR ALL RECEPTACLES	.177 [4.50]
	3	.068 [1.73]		.197 [5.00]
	4	.107 [2.72]		.236 [6.00]
	5	.1465 [3.721]		.276 [7.00]
*	6	.088 [2.23]		.216 [5.50]
* *	7	.1665 [4.229]		.296 [7.52]

* NOTE 8
* * NOTE 9

ZZ	NUMBER OF POSITIONS
09	9
11	11
15	15
21	21
25	25
31	31
41	41
51	51
69	69

PICK AND PLACE CAP OR TAPE (NOTE 4)	C
WITHOUT CAP OR TAPE	0
WITH CAP	1
WITH TAPE (RECEPTACLE ONLY)	2

X	PLATING
1	15u"/.38u GXT™
2	30u"/.76u GXT™

PACKAGING	W
TUBE	2
PRESSURE SEALED TAPE & REEL	3

NOTE 4

EXAMPLE: 91921–31125LF
IS A CONAN RECEPTACLE ASSEMBLY,
HAVING NO PEGS AND WITH A PICK AND PLACE CAP.
IT ALSO HAS GXT™ PLATING, IS .13 [3.2] HIGH AND 25
POSITIONS AND IS PACKAGED IN PRESSURE SEALED TAPE,
REEL AND LEAD FREE.

mat'l code				surface ISO 1302	tolerance ISO 406 ISO 1101		projection	product family: CONAN
ltr	ecn no	dr	date	tolerances unless otherwise specified				title: CONAN™ CONNECTOR ASSEMBLY
AF				angles	linear	.XX±.01/.X±0.3	INCH/MM	
				0°±2°		.XXX±.005/.XX±0.13		
						.XXXX±.0020/.XXX±0.051	scale 5:1	
				dr	R.SEIPLE	11/13/91		dwg no: 91900 sheet 7 of 7 size A3
				engr	D.HORCHLER	01/10/92		
				chr	D.HORCHLER	01/10/92		
				appd	D.HORCHLER	01/10/92		type: Product Customer Drawing
sheet index	revision sheet							

Copyright FCI
FCIconnect.com
form A3

PDM: Rev:AF STATUS:Released Printed: Dec 07, 2011

ООО «НИОКРсистемс» - это оперативные поставки широкого спектра электронных компонентов отечественного и импортного производства напрямую от производителей и с крупнейших мировых складов. Реализуемая нашей компанией продукция насчитывает более полумиллиона наименований.

Благодаря этому наша компания предлагает к поставке практически не ограниченный ассортимент компонентов как оптовыми, мелкооптовыми партиями, так и в розницу.

Благодаря развитой сети поставщиков, помогаем в поиске и приобретении экзотичных или снятых с производства компонентов.

Наша компания это:

- Гарантия качества поставляемой продукции
- Широкий ассортимент
- Минимальные сроки поставок
- Техническая поддержка
- Подбор комплектации
- Индивидуальный подход
- Гибкое ценообразование
- Работаем по 275 ФЗ

ООО «НИОКР СИТЕМС»
Москва, 125362, Россия, ул. Вишневая, д. 9, к. 1, Блок 104 а и 104 в

Телефон: 8 (495) 268-14-82
Email: n@nsistems.ru

ИНН: 7735154786
ОГРН: 1167746717709