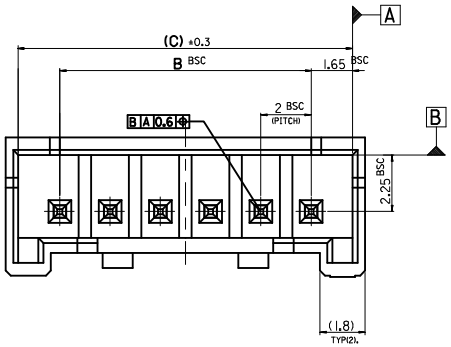

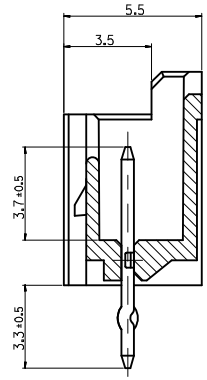

SECTION K-K'

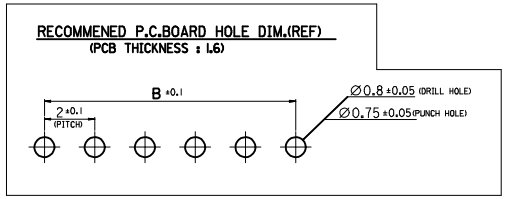

ISOMETRIC VIEW

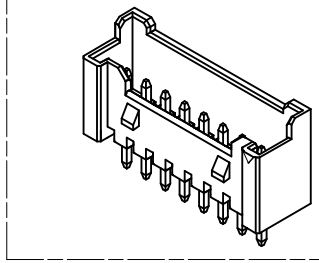

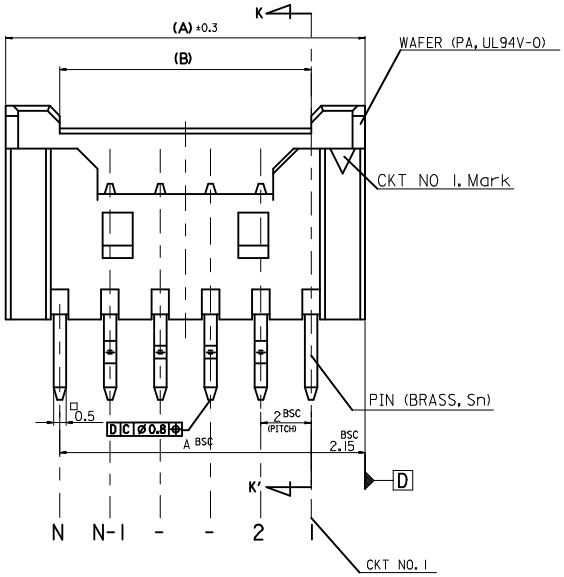

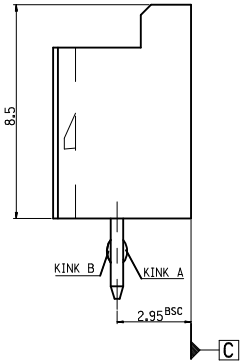

LEGEND

SD-35362-****

CKT NO.

COLOR
- 0 : NATURAL
- 1 : BLACK
- 2 : RED
- 3 : YELLOW
- 4 : BLUE
- 5 : GREEN
- 6 : TUBE PACKING (Natural Color)
- 7 : TUBE PACKING (Red Color)
- 8 : TUBE PACKING (Blue Color)

FINAL GOOD (BULK)
- 5 : SELECTIVE KINK (LEAD FREE)
- 6 : NONE KINK (LEAD FREE)

SUB ASSY (TUBE)
- 7 : SELECTIVE KINK (LEAD FREE)
- 8 : NONE KINK (LEAD FREE)

NOTES

1. MATERIAL : UNFILLED POLYAMIDE, UL94V-0
   PIN : BRASS . TIN PLATED
2. FINISHES : TERMINAL : Sn 2-3um OVERALL
3. PRODUCT SPECIFICATION : PS-35507-003
4. MATING HOUSING : 35507-**0*
   MATING TERMINAL : 50212-8000
5. KINK

CKT NO / CKT	1	2	3	4	5	N-2	N-1	N
6 CKT OVER	—	A	B	—	—	B	A	—
5 CKT	A	B	—	B	A			
4 CKT	A	B	B	A				

(C)	B	(A)	ENG. NO.	ENG. NO.	CKT
31.3	28	32.3	35362 15**	35362-15**	15
29.3	26	30.3	35362 14**	35362-14**	14
27.3	24	28.3	35362 13**	35362-13**	13
25.3	22	26.3	35362 12**	35362-12**	12
23.3	20	24.3	35362 11**	35362-11**	11
21.3	18	22.3	35362 10**	35362-10**	10
19.3	16	20.3	3536209**	35362-09**	9
17.3	14	18.3	3536208**	35362-08**	8
15.3	12	16.3	3536207**	35362-07**	7
13.3	10	14.3	3536206**	35362-06**	6
11.3	8	12.3	3536205**	35362-05**	5
9.3	6	10.3	3536204**	35362-04**	4

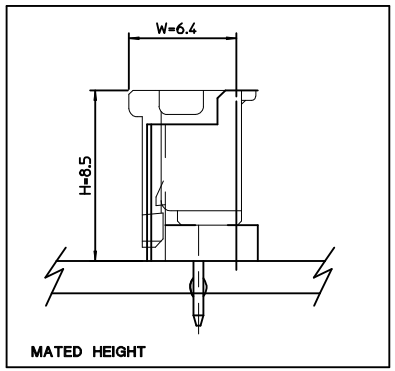

LEAD FREE	
30 over	±0.3
10 over 30 under	±0.25
10 under	±0.2
ANGLE	±3°
GENERAL TOLERANCE	

REVISED
EC NO: KOR2009-0123 2009/03/09
DRWN:HJEONG 2009/03/10
CHKD:YSOOKIM
APPR:YUNSIKKIM 2009/03/11
D

REV | DESCRIPTION

QUALITY SYMBOLS
▼=0
▽=0

GENERAL TOLERANCES (UNLESS SPECIFIED)

	mm	INCH
4 PLACES	± ---	± ---
3 PLACES	± ---	± ---
2 PLACES	± ---	± ---
1 PLACE	± ---	± ---
ANGULAR ±---°		

DRAFT WHERE APPLICABLE MUST REMAIN WITHIN DIMENSIONS

DIMENSION STYLE: MM ONLY
SCALE: 5:1
DESIGN UNITS: METRIC
THIRD ANGLE PROJECTION

DRAWN BY: YSOOKIM DATE: 1996/09/11
CHECKED BY: YSOOKIM DATE: 1996/09/11
APPROVED BY: CWLEE DATE: 1996/09/11
MATERIAL NO.: SEE TABLEE

TITLE: 2.0 W/B WAFER ASS'Y -LEAD FREE-

molex MOLEX INCORPORATED

DOCUMENT NO.: SD-35362-002
SHEET NO.: 1 OF 3
SIZE: A3

THIS DRAWING CONTAINS INFORMATION THAT IS PROPRIETARY TO MOLEX INCORPORATED AND SHOULD NOT BE USED WITHOUT WRITTEN PERMISSION

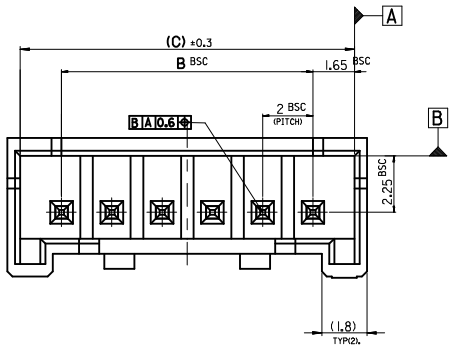

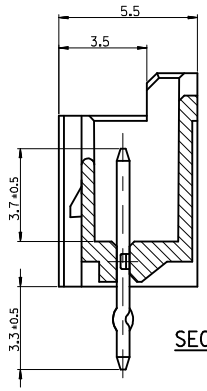

SECTION K-K'

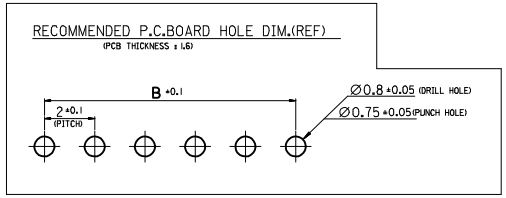

ISOMETRIC VIEW

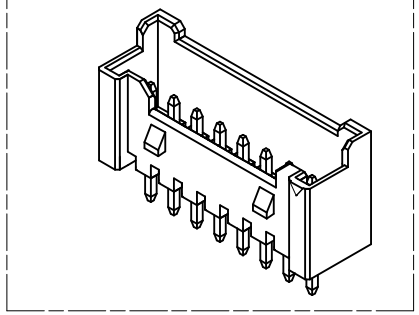

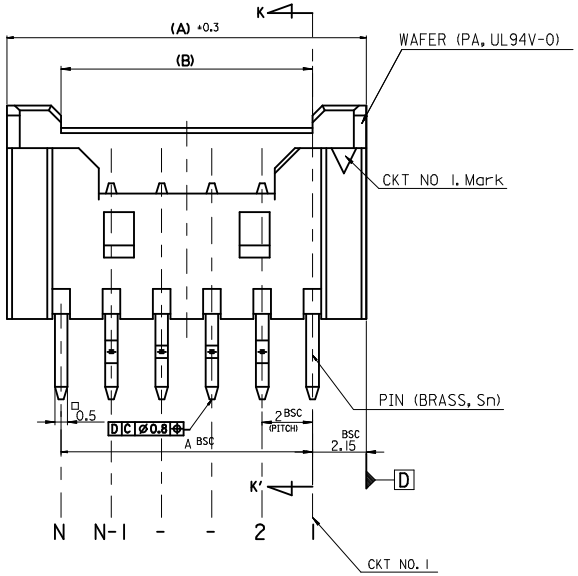

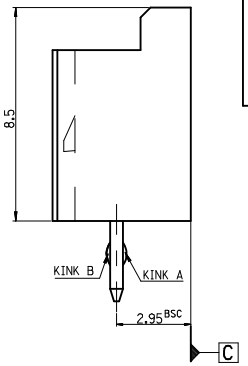

LEGEND

SD-35362-****

CKT NO.

COLOR
- 0 : NATURAL
- 1 : BLACK
- 2 : RED
- 3 : YELLOW
- 4 : BLUE
- 5 : GREEN
- 6 : TUBE PACKING (Natural Color)
- 7 : TUBE PACKING (Red Color)
- 8 : TUBE PACKING (Blue Color)

FINAL GOOD (BULK)
- 5 : SELECTIVE KINK (LEAD FREE)
- 6 : NONE KINK (LEAD FREE)

SUB ASSY (TUBE)
- 7 : SELECTIVE KINK (LEAD FREE)
- 8 : NONE KINK (LEAD FREE)

NOTES

1. MATERIAL : WAFER : UNFILLED POLYAMIDE, UL94V-0
   PIN : BRASS
2. FINISHES : TERMINAL : Sn 2-3um OVERALL
3. PRODUCT SPECIFICATION : PS-35507-003
4. MATING HOUSING : 35507-**0*
   MATING TERMINAL : 50212-8000
5. KINK

CKT NO / CKT	1	2	3	—	—	N-2	N-1	N
16±20 CKT	—	A	B	—	—	B	A	—

(C)	B	(A)	MATERIAL NO.	ENG. NO.	CKT
41.3	38	42.3	3536220**	35362-20**	20
39.3	36	40.3	3536219**	35362-19**	19
37.3	34	38.3	3536218**	35362-18**	18
35.3	32	36.3	3536217**	35362-17**	17
33.3	30	34.3	3536216**	35362-16**	16

MATED HEIGHT

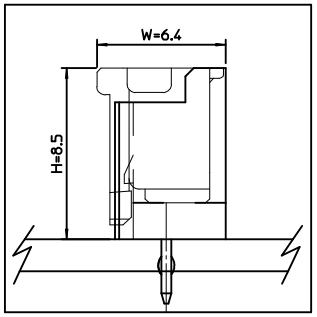

LEAD FREE	
30 over	±0.3
10 over 30 under	±0.25
10 under	±0.2
ANGLE	±3°
GENERAL TOLERANCE	

REVISED
EC NO: KOR2009-0123 2009/03/09
DRWN:HJEONG 2009/03/10
CHKD:YSOOKIM 2009/03/11
APPR:YUNSIKKIM 2009/03/11
DESCRIPTION
REV D

QUALITY SYMBOLS
▼=0
▽C=0

GENERAL TOLERANCES (UNLESS SPECIFIED)

	mm	INCH
4 PLACES	± ---	± ---
3 PLACES	± ---	± ---
2 PLACES	± ---	± ---
1 PLACE	± ---	± ---
ANGULAR ±---°		

DRAFT WHERE APPLICABLE MUST REMAIN WITHIN DIMENSIONS

DIMENSION STYLE: MM ONLY
SCALE: 5:1
DESIGN UNITS: METRIC
THIRD ANGLE PROJECTION

DRAWN BY: YSOOKIM DATE: 1996/09/11
CHECKED BY: JKOH DATE: 1996/09/11
APPROVED BY: CWLEE DATE: 1996/09/11

TITLE: 2.0 W/B WAFER ASS'Y -LEAD FREE-

molex MOLEX INCORPORATED

MATERIAL NO.: SEE TABLE
DOCUMENT NO.: SD-35362-002
SHEET NO.: 3 OF 3
SIZE: A3

THIS DRAWING CONTAINS INFORMATION THAT IS PROPRIETARY TO MOLEX INCORPORATED AND SHOULD NOT BE USED WITHOUT WRITTEN PERMISSION

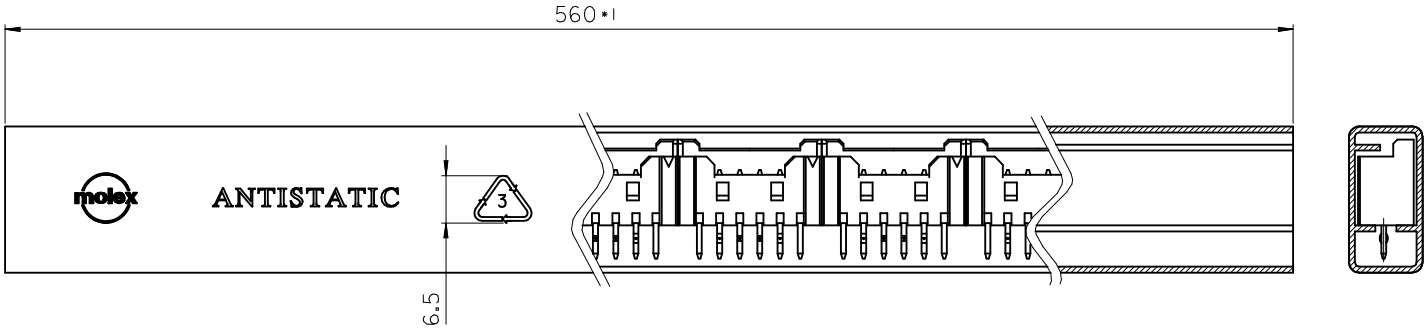

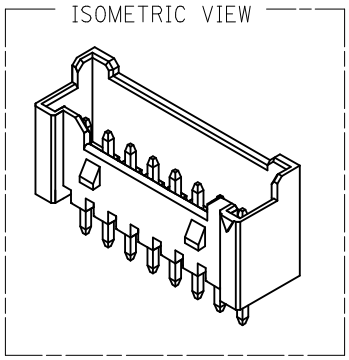

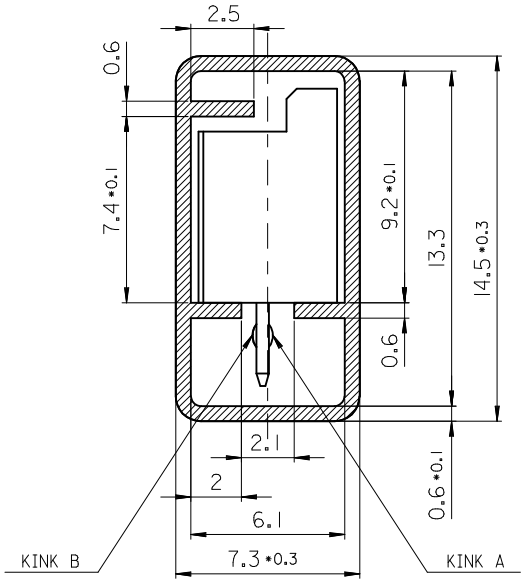

LEGEND.

E-35362-** * *

- 2-20 Circuits — CKT NO.
- COLOR & PACKING:
  - 0 : NATURAL
  - 1 : BLACK
  - 2 : RED
  - 3 : YELLOW
  - 4 : BLUE
  - 5 : GREEN
  - 6 : TUBE PACKING (Natural Color)
  - 7 : TUBE PACKING (RED Color)
  - 8 : TUBE PACKING (BLUE Color)
- KINK:
  - Final GOOD (Bulk): 5 : SELECTIVE KINK; 6 : NONE KINK
  - Sub Assy (Tube): 7 : SELECTIVE KINK; 8 : NONE KINK

B

TABLE

	QT'y	Material NO.	ENG. NO.	CKT
	10	20**	-20**	20
D	10	19**	-19**	19
D	10	18**	-18**	18
D	10	17**	-17**	17
D	15	16**	-16**	16
	15	15**	-15**	15
	15	14**	-14**	14
	15	13**	-13**	13
	15	12**	-12**	12
	20	11**	-11**	11
	20	10**	-10**	10
	25	09**	-09**	9
	25	08**	-08**	8
	30	07**	-07**	7
	35	06**	-06**	6
	40	05**	-05**	5
	50	04**	-04**	4
	60	03**	-03**	3
C	70	3536202**	35362-02**	2

NOTES

1. MATERIAL : TUBE - TRANSLUCENT P.V.C (P-1000)
   Wafer - POLYAMIDE, UL94V-0
   PIN - BRASS SQ 0.5mm
2. BOW(CAMBER) : 1.0mm MAX/Total Length
3. DIMENSIONS GIVEN ACROSS CENTER LINES ARE SYMMETRICAL ABOUT THOSE CENTER LINES WITH HALF THE TOTAL LENGTH.
4. TOTAL TUBE LENGTH : 560mm + -1mm
5. TWIST : 5° MAX./Total Length
6. BURRS : 0.2mm MAX.
7. SKEW : PRODUCTS MUST BE FLOWED SMOOTHLY WHEN THIS STICK IS PLACES 30° ANGLE.
8. THICKNESS : 0.6mm +-0.1mm
9. ARTWORK : PER E-35900-0434 (SILK SCREEN COLOR : RED)
10. (C) APPLICABLE STOPPER(RUBBER) : 35900-0435

KINK TABLE(FOR 35362-****)

CKT \ CKT NO	1	2	3	4	5	N-2	N-1	N
6 CKT OVER	—	A	B	—	—	B	A	—
5 CKT	A	B	—	B	A			
4 CKT	A	B	B	A				
3 CKT	A	B	A					
2 CKT	—							

** 35362-0287 IS ONLY KINKED 2P

PRODUCT NO. \ CKT NO	1	2
35362-0287	A	B

LEAD FREE

REVISED
EC NO: KOR2009-0123 2009/03/09
DRWN:HJEONG 2009/03/10
CH'KD:YSOOKIM 2009/03/11
APPR:YUNSIKKIM
DESCRIPTION
B REV

QUALITY SYMBOLS
▼=0
(C)=0

GENERAL TOLERANCES (UNLESS SPECIFIED)

	mm	INCH
4 PLACES	± ---	± ---
3 PLACES	± ---	± ---
2 PLACES	± ---	± ---
1 PLACE	± 0.2	± ---
ANGULAR ± 1 °		

DRAFT WHERE APPLICABLE MUST REMAIN WITHIN DIMENSIONS

DIMENSION STYLE: MM ONLY	SCALE: 5:1	DESIGN UNITS: METRIC	THIRD ANGLE PROJECTION
DRAWN BY: YSOOKIM	DATE: 2000/12/11	TITLE: 2.0 W/B WAFER ASS'Y TUBE PACKING -LEAD FREE-	
CHECKED BY: JKOH	DATE: 2000/12/11		
APPROVED BY: CWLEE	DATE: 2000/12/11	MOLEX INCORPORATED	
MATERIAL NO.: SEE TABLE		DOCUMENT NO.: SD-35362-003	SHEET NO.: 1 OF 1
SIZE: A3			

THIS DRAWING CONTAINS INFORMATION THAT IS PROPRIETARY TO MOLEX INCORPORATED AND SHOULD NOT BE USED WITHOUT WRITTEN PERMISSION

НИОКР СИСТЕМС

ООО «НИОКРсистемс» - это оперативные поставки широкого спектра электронных компонентов отечественного и импортного производства напрямую от производителей и с крупнейших мировых складов. Реализуемая нашей компанией продукция насчитывает более полумиллиона наименований.

Благодаря этому наша компания предлагает к поставке практически не ограниченный ассортимент компонентов как оптовыми, мелкооптовыми партиями, так и в розницу.

Благодаря развитой сети поставщиков, помогаем в поиске и приобретении экзотичных или снятых с производства компонентов.

Наша компания это:

- Гарантия качества поставляемой продукции
- Широкий ассортимент
- Минимальные сроки поставок
- Техническая поддержка
- Подбор комплектации
- Индивидуальный подход
- Гибкое ценообразование
- Работаем по 275 ФЗ

ООО «НИОКР СИТЕМС»
Москва, 125362, Россия, ул. Вишневая, д. 9, к. 1, Блок 104 а и 104 в

Телефон: 8 (495) 268-14-82
Email: n@nsistems.ru

ИНН: 7735154786
ОГРН: 1167746717709