molex
one company › a world of innovation

This document was generated on 05/19/2010

PLEASE CHECK WWW.MOLEX.COM FOR LATEST PART INFORMATION

Part Number: 0050579402

Status: Active

Overview: cgrid__sl_products

Description: 2.54mm (.100") Pitch SL™ Crimp Housing, Single Row, Version G, Positive Latch, 2 Circuits

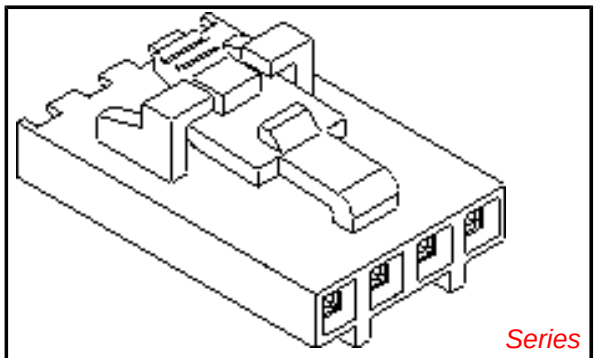

Series

image - Reference only

Documents:

3D Model
Drawing (PDF)
Packaging Specification (PDF)
Product Specification PS-70058 (PDF)
Product Specification PS-70400 (PDF)
RoHS Certificate of Compliance (PDF)

Agency Certification

CSA	LR19980
TUV	R72081037
UL	E29179

General

Product Family	Crimp Housings
Series	70066
Comments	Version G
Overview	cgrid__sl_products
Product Name	SL™

Physical

Circuits (maximum)	2
Color - Resin	Black
Flammability	94V-0
Gender	Female
Glow-Wire Compliant	No
Material - Resin	Polyester Alloy
Number of Rows	1
Packaging Type	Bag
Panel Mount	No
Pitch - Mating Interface (in)	0.100 In
Pitch - Mating Interface (mm)	2.54 mm
Stackable	No
Temperature Range - Operating	-40°C to +105°C

Material Info

Old Part Number	70066-0176

Reference - Drawing Numbers

Packaging Specification	PK-70066-100
Product Specification	PS-70058, PS-70400
Sales Drawing	SD-70066-0176-0199
Test Summary	TS-70058-001

EU RoHS
ELV and RoHS Compliant

China RoHS

REACH SVHC
Contains SVHC: No

Halogen-Free Status
Not Halogen-Free

Need more information on product environmental compliance?

Email productcompliance@molex.com
For a multiple part number RoHS Certificate of Compliance, click here

Please visit the Contact Us section for any non-product compliance questions.

Search Parts in this Series
70066Series

Mates With
70018 , 70543, 70545 , 70553 , 70555, 70541 , 70551 , 70634

Use With
70058 , 71851

This document was generated on 05/19/2010

PLEASE CHECK WWW.MOLEX.COM FOR LATEST PART INFORMATION

70066

NOTES:

1. MATERIAL: G.F. POLYESTER, 94V-0, COLOR: BLACK
2. HOUSING MAY BE USED WITH TERMINAL NUMBERS 70058 AND 71851.
3. REFER TO CHART FOR AVAILABLE CIRCUIT SIZES.
4. HOUSINGS TO BE USED WITH (0.64)/.025 SQUARE OR ROUND PINS.
5. HOUSINGS ARE STACKABLE END-TO-END ON (2.54)/.100 CENTERS.
6. REFER TO MOLEX PRODUCT SPECIFICATIONS PS-70058, PS-71851, AND MOLEX APPLICATION SPECIFICATION SDES-70400.
7. PARTS MAY OR MAY NOT BE SUPPLIED WITH EXTERIOR CORE-OUT CONFIGURATION. REFER TO MOLEX DRAWING NUMBER SD-70066-**** FOR OPTIONAL HOUSING DETAILS.
8. DIMENSIONS ARE SHOWN FOR REFERENCE ONLY.
9. PACKAGE PER PK-70066-100.

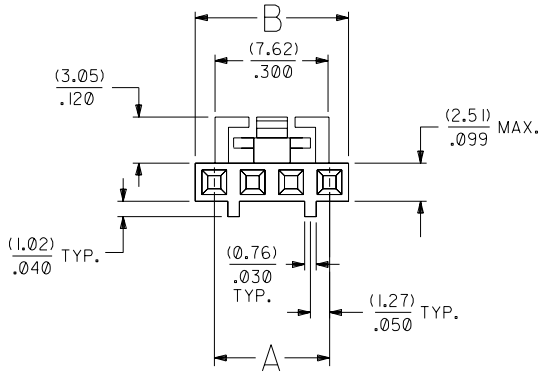

CKT. SIZE	EDP. NO.	ENG. NO.	A ± (0.10)/.004	B MAX.
2	50-57-9402	70066-0176	(2.54)/.100	(5.05)/.199
3	50-57-9403	70066-0177	(5.08)/.200	(7.59)/.299
4	50-57-9404	70066-0178	(7.62)/.300	(10.13)/.399
5	50-57-9405	70066-0179	(10.16)/.400	(12.67)/.499
6	50-57-9406	70066-0180	(12.70)/.500	(15.21)/.599
7	50-57-9407	70066-0181	(15.24)/.600	(17.75)/.699
8	50-57-9408	70066-0182	(17.78)/.700	(20.29)/.799
9	50-57-9409	70066-0183	(20.32)/.800	(22.83)/.899
10	50-57-9410	70066-0184	(22.86)/.900	(25.37)/.999
11	50-57-9411	70066-0185	(25.40)/1.000	(27.91)/1.099
12	50-57-9412	70066-0186	(27.94)/1.100	(30.45)/1.199
13	50-57-9413	70066-0187	(30.48)/1.200	(32.99)/1.299
14	50-57-9414	70066-0188	(33.02)/1.300	(35.53)/1.399
15	50-57-9415	70066-0189	(35.56)/1.400	(38.07)/1.499
16	50-57-9416	70066-0190	(38.10)/1.500	(40.61)/1.599
17	50-57-9417	70066-0191	(40.64)/1.600	(43.15)/1.699
18	50-57-9418	70066-0192	(43.18)/1.700	(45.69)/1.799
19	50-57-9419	70066-0193	(45.72)/1.800	(48.23)/1.899
20	50-57-9420	70066-0194	(48.26)/1.900	(50.77)/1.999
21	50-57-9421	70066-0195	(50.80)/2.000	(53.31)/2.099
22	50-57-9422	70066-0196	(53.34)/2.100	(55.85)/2.199
23	50-57-9423	70066-0197	(55.88)/2.200	(58.39)/2.299
24	50-57-9424	70066-0198	(58.42)/2.300	(60.93)/2.399
25	50-57-9425	70066-0199	(60.96)/2.400	(63.47)/2.499

70066

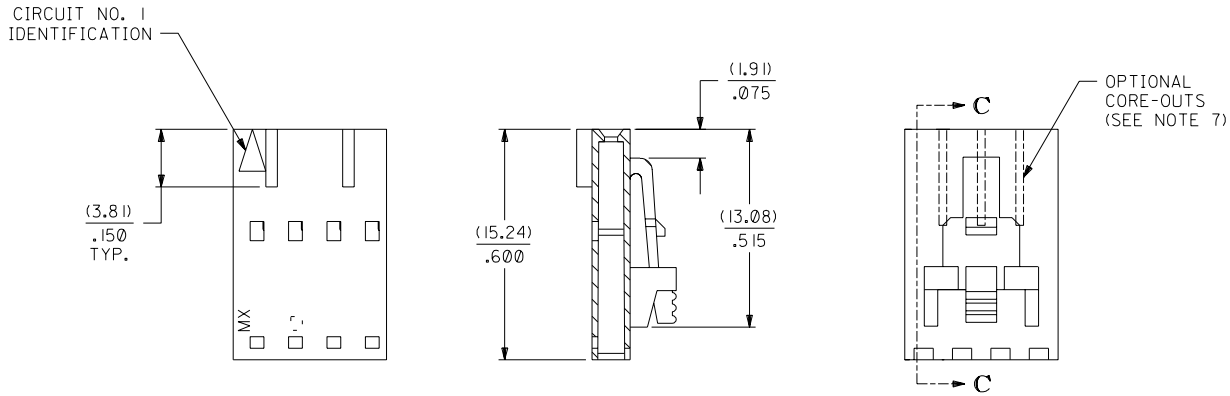

SECTION C-C

OPTION "G"

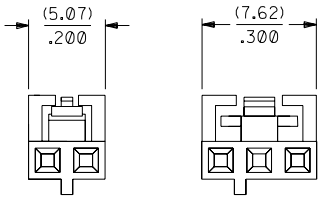

2 CIRCUIT 3 CIRCUIT

LATCH AND POLARIZATION RIB LOCATION

4 THROUGH 25 CIRCUIT HOUSINGS ARE AS SHOWN IN MAIN BODY OF DRAWING

LTR.	REVISIONS	LTR.	REVISIONS
		I	ADD PKG NOTE PER UDT2000-0468 SCHAFER 99/12/1
K	ADD DIMENSIONS ECN UCP2004-0893 RWHITE 03/11/10	H	REVISED PER ECR # U40682 05/27/94 REED
J	ADD TOLERANCES ECN UDT2002-0314 BBARKER 01/08/21	G	REVISED PER ECR # U10967 08/08/91 MJM/MGB

DIMENSIONS SHOWN (METRIC) INCH
UNLESS OTHERWISE SPECIFIED TOLERANCES: ANGULAR ± 1/2°

	INCH	METRIC
3 PLACE	± .007	
2 PLACE	±	± 0.18
1 PLACE		±

DRAFT WHERE APPLICABLE MUST REMAIN WITHIN DIMENSIONS

DRWG. BY RS | CHK'D. BY WZ
APP'D. BY RL | SCALE 4 : 1

MFG. SH. REV.

▽ = 0 ▼ = 0 REVISE ONLY ON CAD SYSTEM

TITLE HOUSING, CONNECTOR (2.54)/.100 GRID STACKABLE SINGLE ROW

molex MOLEX INCORPORATED LISLE, ILL. 60532 U.S.A.

SHEET NO. 1 OF 1 | DATE 03/28/86

PART NO. SEE CHART | DRWG. NO. SD-70066-0176-0199

FILE NAME 70066176

THIS DRAWING CONTAINS INFORMATION THAT IS PROPRIETARY TO MOLEX INC. AND SHOULD NOT BE USED WITHOUT WRITTEN PERMISSION.

DIV. DA | SIZE C

НИОКР СИСТЕМС

ООО «НИОКРсистемс» - это оперативные поставки широкого спектра электронных компонентов отечественного и импортного производства напрямую от производителей и с крупнейших мировых складов. Реализуемая нашей компанией продукция насчитывает более полумиллиона наименований.

Благодаря этому наша компания предлагает к поставке практически не ограниченный ассортимент компонентов как оптовыми, мелкооптовыми партиями, так и в розницу.

Благодаря развитой сети поставщиков, помогаем в поиске и приобретении экзотичных или снятых с производства компонентов.

Наша компания это:

- Гарантия качества поставляемой продукции
- Широкий ассортимент
- Минимальные сроки поставок
- Техническая поддержка
- Подбор комплектации
- Индивидуальный подход
- Гибкое ценообразование
- Работаем по 275 ФЗ

ООО «НИОКР СИТЕМС»
Москва, 125362, Россия, ул. Вишневая, д. 9, к. 1, Блок 104 а и 104 в

Телефон: 8 (495) 268-14-82
Email: n@nsistems.ru

ИНН: 7735154786
ОГРН: 1167746717709